Form No. 3373-375 Rev A

Road Lights with Brake Lights Kit

Groundsmaster® 3400-D Traction Unit

Model No. 02917—Serial No. 312000001 and Up

Installation Instructions

Installation

Loose Parts

Use the chart below to verify that all parts have been shipped.

Procedure	Description	Qty.	Use
1	No parts required	–	Initial preparation
2	Rear light bracket, L.H. Rear light bracket, R.H. Bolt, M16 x 110mm Nut, M16 Fuse, 15 amp	1 1 2 2 2	Install the rear lights
3	Dowty seal, 1/4 inch Pressure switch adapter Pressure switch Pressure switch cable	1 1 1 1	Install the pressure switch
4	Number plate bracket PM2 Connector Gothic Flasher relay Standard shorter relay	1 1 1 1	Install the number plate bracket
5	Center headlight mount R.H. Headlight mount L.H. Headlight mount Screw, M6 x 20mm Nut, nyloc M6 Screw, M10 x 25mm Nut, nyloc M10 Washer, 3/8 inch Mounting bracket PM4 Connector	1 1 1 8 8 4 4 8 2 2	Install the front lights
6	Instrument panel connector lead Switch, hazard warning Switch, lights Switch, indicator Button, horn Decal, horn Cable tie Cable tie	1 1 1 1 1 1 10 14	Install the control panel switches
7	Reflector	2	Install the reflectors
8	Serial label	1	Install the serial label

© 2012—The Toro® Company
8111 Lyndale Avenue South
Bloomington, MN 55420

Register at www.Toro.com.

CE

Original Instructions (EN)
Printed in the UK.
All Rights Reserved

Media and Additional Parts

Description	Qty.	Use
Installation Instructions	1	Read before installing and operating kit
Parts Catalog	1	Use to reference part numbers

1

Initial Preparation

No Parts Required

Procedure

1. Park the machine on a level surface, lower the cutting unit, stop the engine, engage the parking brake and remove the key from the ignition switch.
2. Disconnect the negative (–) battery cable from the battery.

⚠ WARNING

Wear safety goggles and rubber gloves when working with batteries. Since the gases are explosive, keep open flames and electrical spark away from batteries. Do not smoke.

2

Installing the Rear Lights

Parts needed for this procedure:

1	Rear light bracket, L.H.
1	Rear light bracket, R.H.
2	Bolt, M16 x 110mm
2	Nut, M16
2	Fuse, 15 amp

Procedure

The rear lights attach to the outside of the ROPS post on the left and right sides and use the existing bolt holes in the ROPS.

1. Open the engine cover.
2. Lift the operator platform.
3. Remove the bulkhead by unscrewing the 4 bolts (Figure 1). This is to enable access to the main wiring loom.

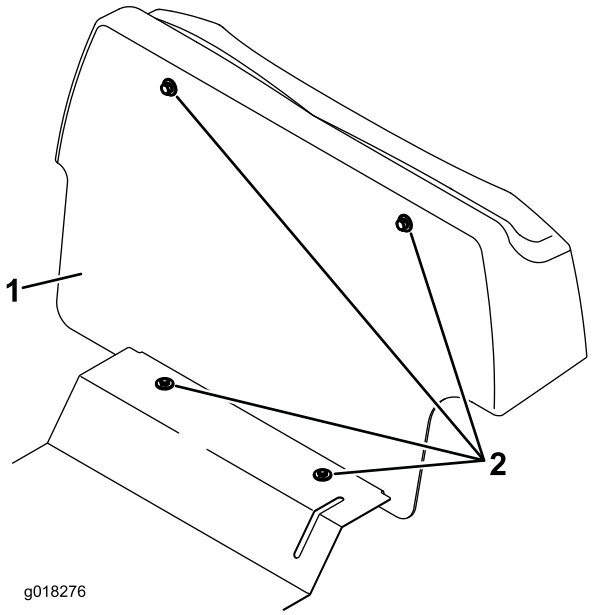

Figure 1

1. Bulkhead
2. Screws (4)

4. Ensure that ROPS pivot bolts and clamp bolts are in place and are tight.
5. Remove the ROPS pivot bolt on the left side of the mower.
6. Align the upper hole in the L.H. rear light bracket with the hole in the ROPS and insert the new M16 x 110mm bolt (Figure 2). Re-use the existing washers.

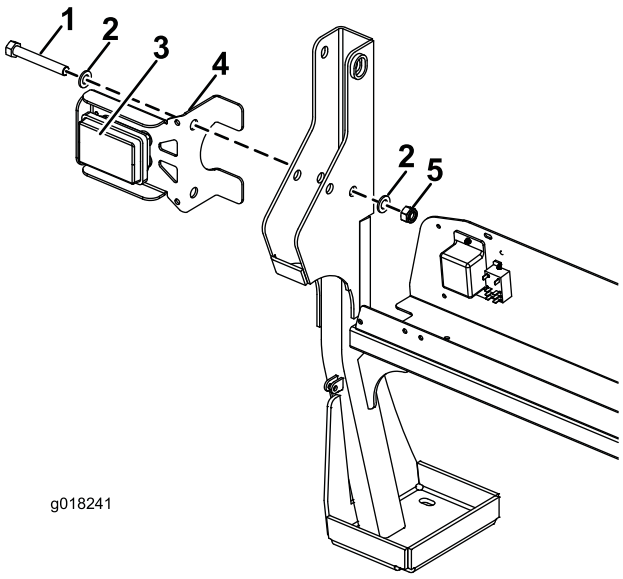

Figure 2

1. Bolt, M16 x 110mm
2. Existing washers
3. Orange indicator side up
4. L.H. rear light bracket
5. Nut, M16

7. Install the new M16 nut onto the bolt and tighten to a torque of 15 N-m (11 ft-lbs). Do not overtighten as this will make the ROPS difficult to fold.
8. Remove the ROPS pivot bolt on the right side of the mower.
9. Align the upper hole in the R.H. rear light bracket with the hole in the ROPS and insert the new M16 x 110mm bolt (Figure 3). Re-use the existing washers.

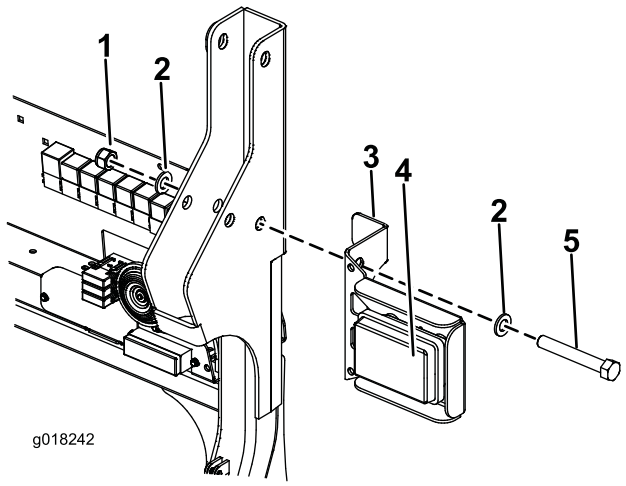

Figure 3

1. Nut, M16
2. Existing washers
3. R.H. rear light bracket
4. Orange indicator side up
5. Bolt, M16 x 110mm

10. Install the new M16 nut onto the bolt and tighten to a torque of 15 N-m (11 ft-lbs). Do not overtighten as this will make the ROPS difficult to fold.

Note: If there is already a beacon kit fitted to the right side or a waste bin kit fitted to left side, it is allowable to use the same bolt for the installation. It is advisable to use the new M16 nyloc nuts provided with this kit.

11. Feed all electrical cables down the front of the ROPS frame and onto the electrical mount panel.
12. The cables must now be connected to the main wiring loom of the machine which is located on the electrical bulkhead (Figure 4). Connect the 4-pin L.H. rear light assembly wiring connector to the corresponding 4-pin electrical connector on the L.H. side of the main wiring loom. Connect the 4-pin R.H. rear light assembly wiring connector to the corresponding 4-pin electrical connector on the R.H. side of the main wiring loom. The 2-pin electrical connectors on the L.H. and R.H. rear light assembly is required for the number plate light. Only one of the 2-Pin electrical connectors are used.

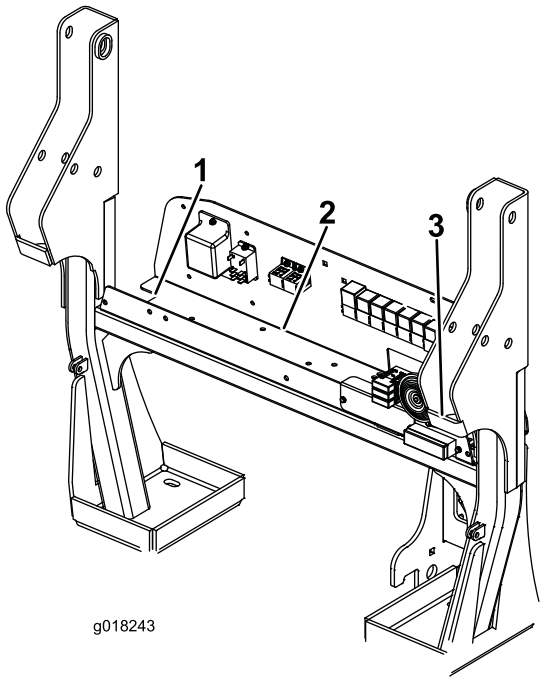

Figure 4

1. 4-pin L.H. rear light assembly connector main wiring loom
2. 3-pin electrical pressure switch cable connector main wiring loom
3. 4-pin R.H. rear light assembly connector main wiring loom

13. Install (2) 15 amp fuses into the fuse block. Use the 1st and 3rd receptacles from the left end of the fuse block (Figure 5).

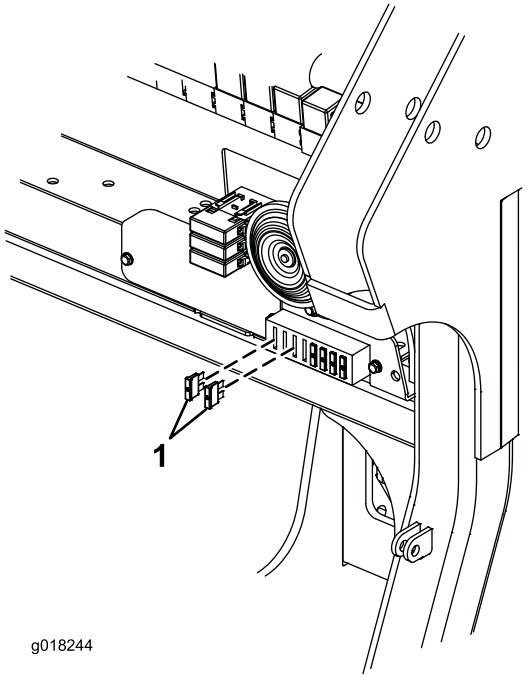

Figure 5

1. Fuse, 15 amp (2)

3

Installing the Pressure Switch

Parts needed for this procedure:

1	Dowty seal, 1/4 inch
1	Pressure switch adapter
1	Pressure switch
1	Pressure switch cable

Procedure

The pressure switch controls the brake lights. The switch is screwed into the main transmission line.

1. Locate the three hose connections on the right side of the transmission pump. The lower front connection to the pump has a tee fitting with a blanking cap.
2. Remove this blanking cap from the tee fitting.
3. Screw the pressure switch adapter into the tee fitting using a 1/4 inch dowty seal (Figure 6).

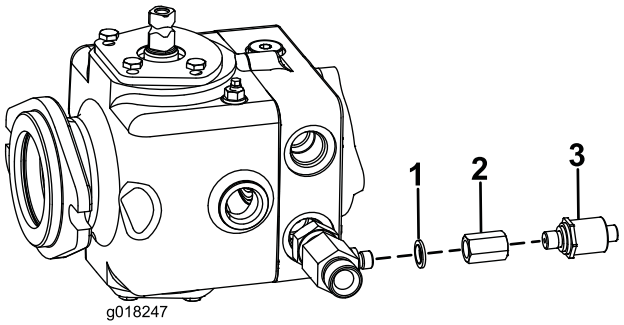

Figure 6

1. Dowty seal, 1/4 inch
2. Pressure switch adapter
3. Pressure switch

4. Screw the pressure switch into this adapter (Figure 6). Torque the switch to 34 N-m (25 ft-lbs).
5. Working on the electrical bulkhead, plug the 3-pin connector of the electrical pressure switch cable to the corresponding connector located on the main wiring loom of the machine (Figure 4 and Figure 7).

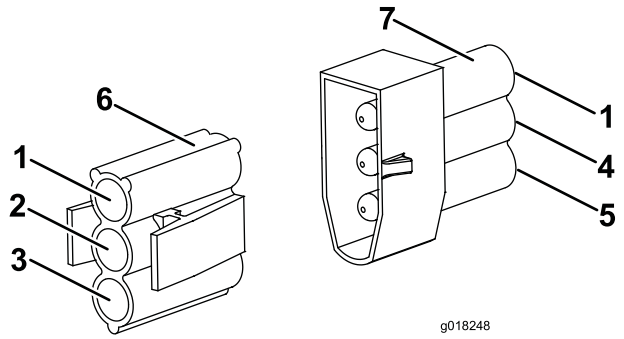

Figure 7

1. Green/Yellow
2. Yellow
3. Black
4. Brown
5. Blue
6. Pressure switch connector, main wiring loom
7. Pressure switch cable connector

6. Run the electrical pressure switch cable from the electrical bulkhead, down the R.H. ROPS post forward along the chassis rail to the pressure switch.
7. Plug the connector onto the pressure switch and secure the connector.

4

Installing the Number Plate Bracket

Parts needed for this procedure:

1	Number plate bracket
1	PM2 Connector Gothic
1	Flasher relay
1	Standard shorter relay

Procedure

The number plate with light attaches to the bulkhead.

1. In the center of the plastic bulkhead cover, approximately 40mm (1–1/2 inches) from the front, drill a 8mm diameter hole (Figure 8).

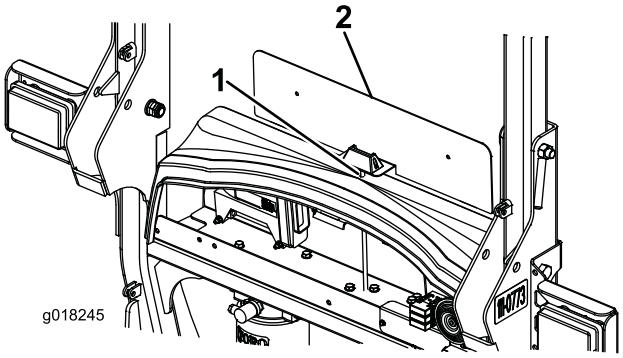

Figure 8

1. Drill 8mm hole here
2. Number plate bracket

⚠ WARNING

When drilling or carrying out other operations, always wear eye protection.

2. Feed the number plate cable through the 8mm hole in the plastic bulkhead cover. Install the number plate bracket and the bulkhead with the bulkhead fasteners previously removed.
3. Push the PM2 connector onto the terminals of the number plate cable (Figure 9).

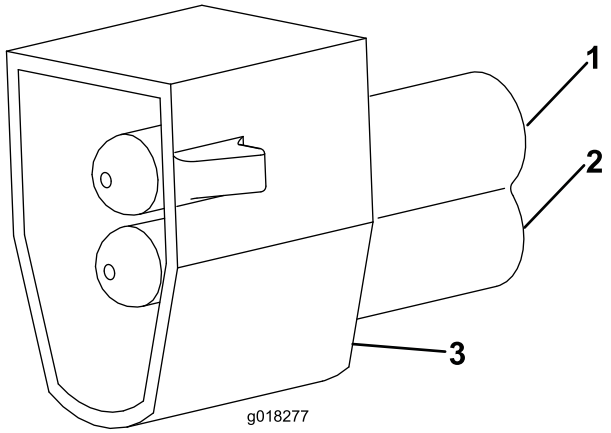

Figure 9

1. Red wire
2. Black wire
3. PM2 connector

4. Connect the number plate light wiring to either the L.H. or R.H. rear light assembly wiring 2-Pin electrical connector.
5. Plug the flasher relay into the L.H. vacant relay socket and the standard shorter relay into the R.H. vacant replay socket (Figure 10).

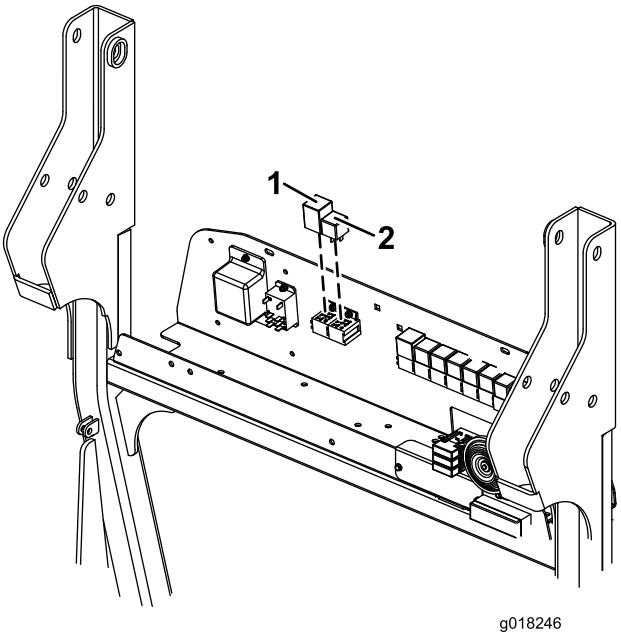

Figure 10

1. Flasher relay
2. Standard shorter relay

5

Installing the Front Lights

Parts needed for this procedure:

1	Center headlight mount
1	R.H. Headlight mount
1	L.H. Headlight mount
8	Screw, M6 x 20mm
8	Nut, nyloc M6
4	Screw, M10 x 25mm
4	Nut, nyloc M10
8	Washer, 3/8 inch
2	Mounting bracket
2	PM4 Connector

Procedure

The headlights and indicator attach to the brackets at the front of the machine.

1. The front light assemblies attach to the center headlight mount which attaches to the machine using two mounting brackets (Figure 11).
2. Install the two mounting brackets to the front of the machine using M10 x 25mm screws, 3/8 inch washers, M10 nyloc nuts (Figure 11).
3. Install the center headlight mount to the mounting brackets using M10 x 25mm screws, 3/8 inch washers, M10 nyloc nuts (Figure 11).
4. Apply anti-seize grease to fully coat the inside wall of the tube ends and all the surfaces of the springs and tube end profiles (Figure 11).
5. The light assemblies are now ready to install. While holding the R.H. headlight mount, thread the wiring cable down through the end tubes and out the center cut out of the center headlight mount (Figure 11).
6. Secure the R.H. front light assembly to the center headlight mount using the M6 x 20mm screws and M6 nyloc nuts (Figure 11).

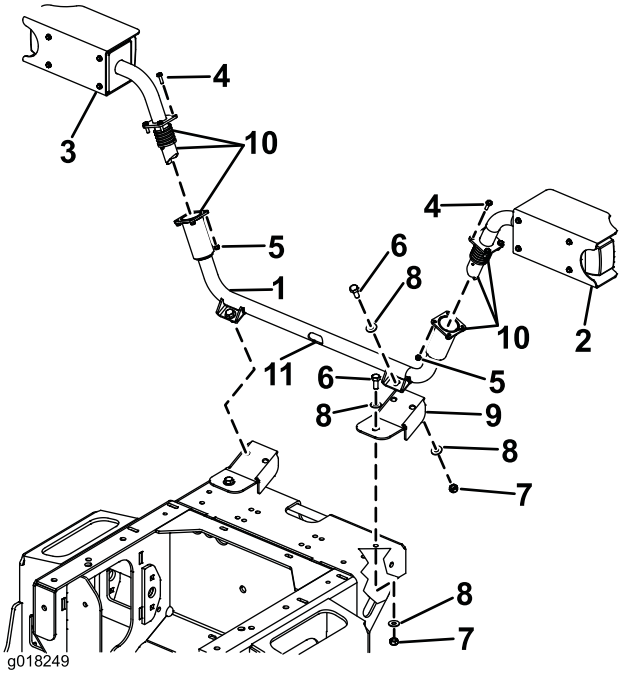

Figure 11

1. Center headlight mount
2. R.H. Headlight mount
3. L.H. Headlight mount
4. Screw, M6 x 20mm
5. Nut, nyloc M6
6. Screw, M10 x 25mm
7. Nut, nyloc M10
8. Washer, 3/8 inch
9. Mounting bracket
10. Apply anti-seize here
11. Center cut of headlight mount

7. Install the PM4 wiring cable connector onto the wiring cable by pushing the pins into the connector. (Figure 12). Identify and mark this connector as R.H. to help with cable identification when making the connections to the machine main wiring loom.

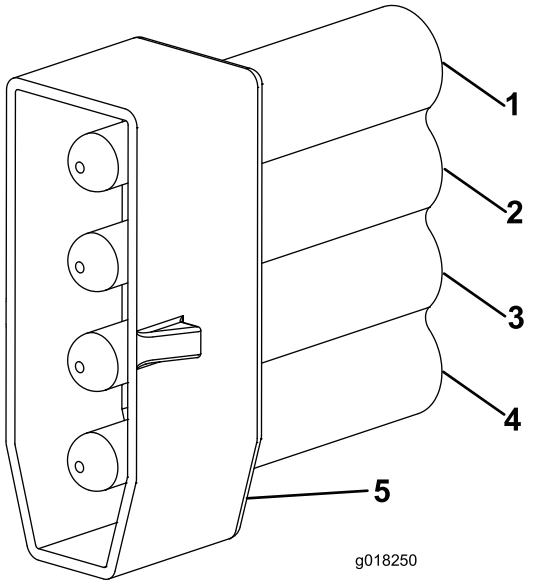

Figure 12

1. Blue
2. Green
3. Red/White
4. Black
5. PM4 connector

8. Repeat the above procedure for the L.H. light assembly. Identify and mark this connector as L.H. to help with cable identification when making the connections to the machine main wiring loom.
9. The cables can now be connected to the main wiring loom of the machine. Pass the cables down through the cutout for the towing point and though the holes in the front chassis to the cutting unit manifold located under the operators platform.
10. Locate the two 4-pin connectors on the main wiring loom located near to the cutter manifold.
11. Remove the blanking caps from the lighting connectors on the main wiring loom.
12. Connect the connector on the machine wiring loom with GREEN/WHITE wire to the identified L/H light assembly connector. (Figure 13).

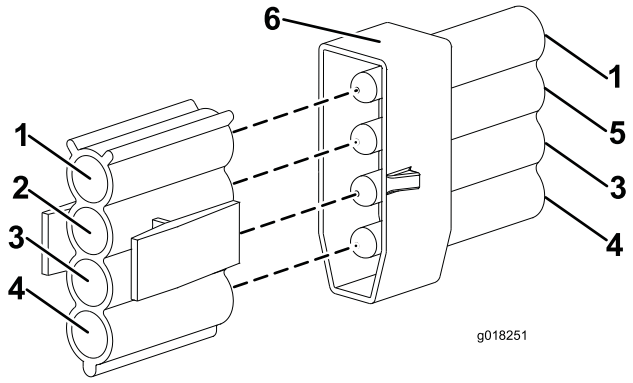

Figure 13

1. Blue
2. Green/White
3. Red/White
4. Black
5. Green
6. PM4 connector

13. Secure the connector, on the machine wiring loom with the GREEN/RED wire, to the identified R/H light assembly connector (Figure 14).

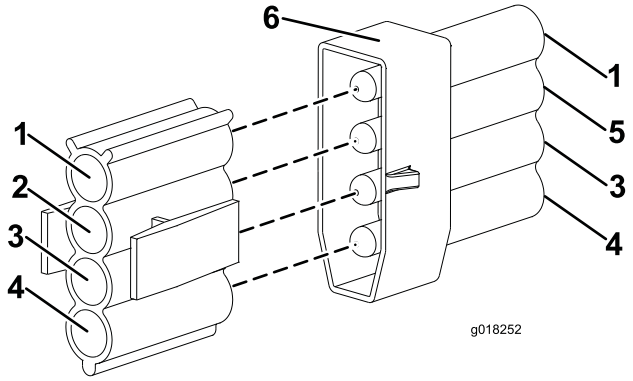

Figure 14

1. Blue
2. Green/Red
3. Red/White
4. Black
5. Green
6. PM4 connector

6

Installing the Control Panel Switches

Parts needed for this procedure:

1	Instrument panel connector lead
1	Switch, hazard warning
1	Switch, lights
1	Switch, indicator
1	Button, horn
1	Decal, horn
10	Cable tie
14	Cable tie

Procedure

1. Remove the six screws securing the control panel to the control pod.
2. Carefully lift off the panel ensuring that the connectors to the existing switches are not disturbed.
3. Install the instrument panel connector lead into the control arm.
4. Feed the connector lead instrument panel up through the opening in the bottom of the control pod, so that the end with the three connectors are inside the control pod and the end with the single large connector is feed down the control arm.
5. In the rear face of the control pod, just above the key switch, are switch blank panels.
6. Remove the two switch blank panels and pass the connectors and wires for the hazard and light switch though the switch hole (Figure 15). The Hazard and Lights connectors are on the shorter leads, the hazard connector is red and the light connector is black. The indicator connector is black and on the longer lead.

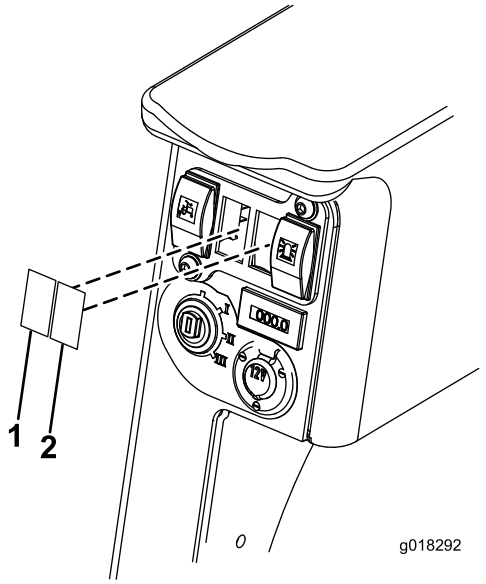

Figure 15

1. Switch blank–light switch
2. Switch blank–hazard switch

7. Connect the light and hazard switch to the correct connector and push the switch into the hole (Figure 16).

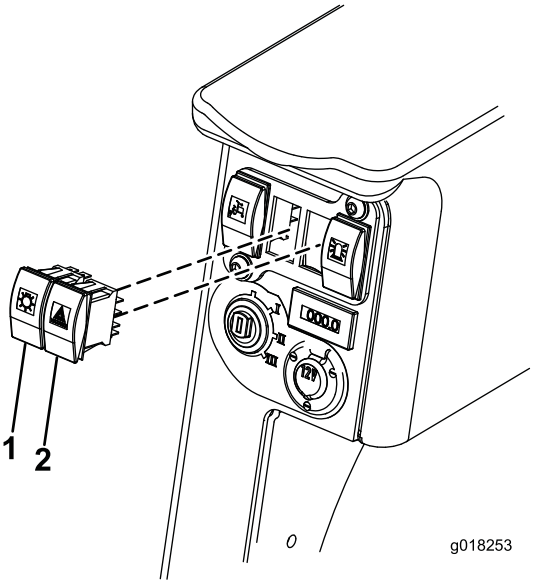

Figure 16

1. Light switch
2. Hazard switch

8. On the control panel, remove the round blanking plug and the rectangular blanking plug next to it (Figure 17).

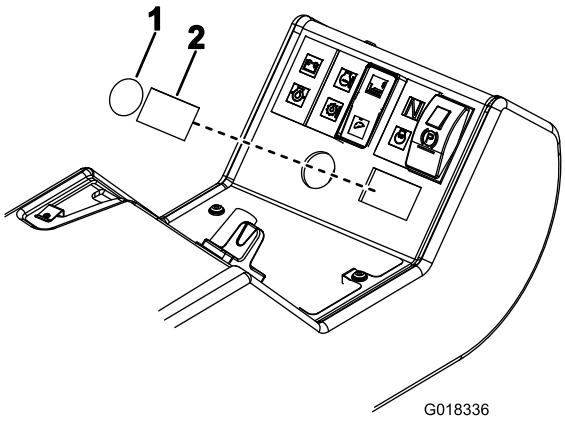

Figure 17

1. Round blanking plug–horn button
2. Rectangular blanking plug-indicator switch

9. Install the horn decal lining up the edges of the round and rectangular holes (Figure 18).

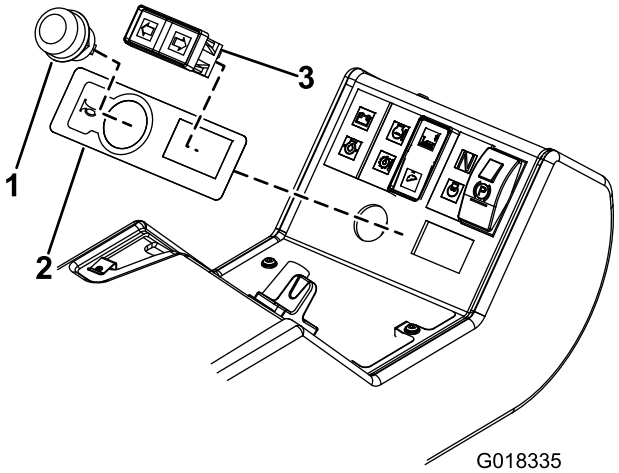

Figure 18

1. Horn button
2. Horn decal
3. Direction indicator switch

10. Install the horn button and the direction indicator switch into the control panel (Figure 18). Install the direction indicator switch with the Green/Red wires to the left and the Green/White wires to the right, as shown in Figure 19.

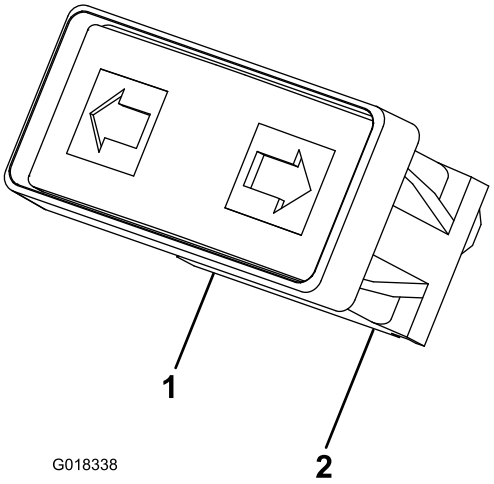

Figure 19

1. Green/Red
2. Green/White

11. Connect the direction indicator switch to the connector lead instrument panel. The indicator connector is black and on the longer lead.
12. In the control panel there will be a pink and black/purple wire for the Horn button. Connect the pink and black wires to the horn switch.
13. Working under the operator platform, connect the connector lead instrument panel to the multi pin connector on the machine main electrical wiring loom. This is located in the chassis rail to the right of the transmission pump.
14. Cable tie all cables for the front lights, rear lights and the pressure switch so that they are secure and to prevent them from becoming trapped or chafed.
15. Reconnect the negative battery cable.
16. Test the switches on the control panel to ensure that they are operating correctly.
17. Refit the control panel ensuring that no connectors have become detached and that no cables are nipped.
18. Lower and latch the engine cover and operators platform.

7

Installing the Reflectors

Parts needed for this procedure:

2	Reflector

Procedure

Affix a reflector to each side of the engine cover. Ensure that the outside edge of each reflector is adhered 100mm (4 inches) from each edge of the engine cover (Figure 20). Make sure the surface is clean before mounting the reflectors.

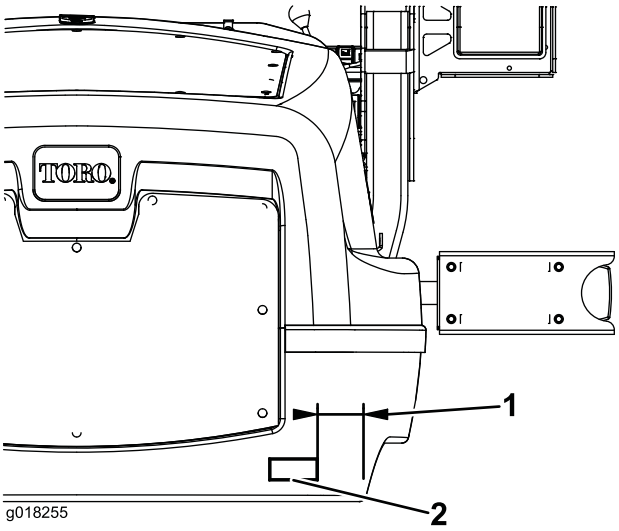

Figure 20

1. 100mm (4 inches)
2. Reflector

8

Installing the Serial Label

Parts needed for this procedure:

1	Serial label

Procedure

Affix the serial label adjacent to the machine serial label. Make sure the surface is clean before mounting the serial label.

Operation

Adjusting the Headlights

Using the top screws shown in Figure 21, adjust the headlights per local standards.

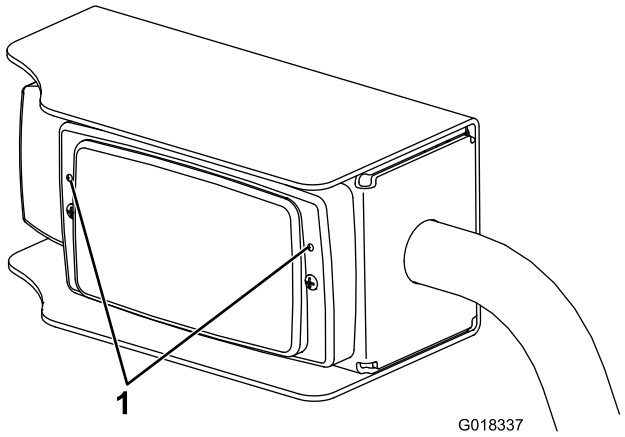

Figure 21

1. Headlight adjusting screws

Operating the Lights

Position marker lights (front and rear)

Depress the top of the switch, the switch will be illuminated and the red (rear) and white (front) marker lights will come on.

Headlights

Rotate the ignition switch to position 2 to illuminate the headlights.

Hazard lights

Depress the top of the hazard light switch, all four indicator lamps will flash. The ignition switch does not need to be on for these to operate.

Direction Indicators

With the ignition switch at position 2, depress the relevant side of the direction indicator switch, the two indicator lamps on that side of the machine will flash.

Brake Lights

The brake lights will automatically come on when the machine is decelerating, i.e, when the control pedal is returning to neutral, when travelling in a forward direction only.

Maintenance

General Maintenance

Important: Replace all worn or damaged parts with genuine Toro parts.

1. Check that all lights are working on a regular basis.
2. Ensure the headlights are adjusted correctly.
3. Clean the lights daily - avoid using solvent based products.

Replacing a bulb

1. Remove the lens cover.
2. Replace the bulb.
3. Replace the lens cover.
4. Adjust the lights. Refer to Adjusting the Headlights in the Operation Section.

The Toro Total Coverage Guarantee

A Limited Warranty

Conditions and Products Covered

The Toro® Company and its affiliate, Toro Warranty Company, pursuant to an agreement between them, jointly warrant your Toro Commercial product ("Product") to be free from defects in materials or workmanship for two years or 1500 operational hours*, whichever occurs first. This warranty is applicable to all products with the exception of Aerators (refer to separate warranty statements for these products). Where a warrantable condition exists, we will repair the Product at no cost to you including diagnostics, labor, parts, and transportation. This warranty begins on the date the Product is delivered to the original retail purchaser.
* Product equipped with an hour meter.

Instructions for Obtaining Warranty Service

You are responsible for notifying the Commercial Products Distributor or Authorized Commercial Products Dealer from whom you purchased the Product as soon as you believe a warrantable condition exists. If you need help locating a Commercial Products Distributor or Authorized Dealer, or if you have questions regarding your warranty rights or responsibilities, you may contact us at:

Commercial Products Service Department
Toro Warranty Company
8111 Lyndale Avenue South
Bloomington, MN 55420-1196
E-mail: commercial.warranty@toro.com

Owner Responsibilities

As the Product owner, you are responsible for required maintenance and adjustments stated in your Operator's Manual. Failure to perform required maintenance and adjustments can be grounds for disallowing a warranty claim.

Items and Conditions Not Covered

Not all product failures or malfunctions that occur during the warranty period are defects in materials or workmanship. This warranty does not cover the following:

- Product failures which result from the use of non-Toro replacement parts, or from installation and use of add-on, or modified non-Toro branded accessories and products. A separate warranty may be provided by the manufacturer of these items.
- Product failures which result from failure to perform recommended maintenance and/or adjustments. Failure to properly maintain your Toro product per the Recommended Maintenance listed in the *Operator's Manual* can result in claims for warranty being denied.
- Product failures which result from operating the Product in an abusive, negligent or reckless manner.
- Parts subject to consumption through use unless found to be defective. Examples of parts which are consumed, or used up, during normal Product operation include, but are not limited to, brakes pads and linings, clutch linings, blades, reels, bed knives, tines, castor wheels, tires, filters, belts, and certain sprayer components such as diaphragms, nozzles, and check valves, etc.
- Failures caused by outside influence. Items considered to be outside influence include, but are not limited to, weather, storage practices, contamination, use of unapproved coolants, lubricants, additives, fertilizers, water, or chemicals, etc.
- Normal noise, vibration, wear and tear, and deterioration.
- Normal "wear and tear" includes, but is not limited to, damage to seats due to wear or abrasion, worn painted surfaces, scratched decals or windows, etc.

Parts

Parts scheduled for replacement as required maintenance are warranted for the period of time up to the scheduled replacement time for that part. Parts replaced under this warranty are covered for the duration of the original product warranty and become the property of Toro. Toro will make the final decision whether to repair any existing part or assembly or replace it. Toro may use remanufactured parts for warranty repairs.

Note Regarding Deep Cycle Battery Warranty:

Deep cycle batteries have a specified total number of kilowatt-hours they can deliver during their lifetime. Operating, recharging, and maintenance techniques can extend or reduce total battery life. As the batteries in this product are consumed, the amount of useful work between charging intervals will slowly decrease until the battery is completely worn out. Replacement of worn out batteries, due to normal consumption, is the responsibility of the product owner. Battery replacement may be required during the normal product warranty period at owner's expense.

Maintenance is at Owner's Expense

Engine tune-up, lubrication cleaning and polishing, replacement of Items and Conditions Not Covered filters, coolant, and completing Recommended Maintenance are some of the normal services Toro products require that are at the owner's expense.

General Conditions

Repair by an Authorized Toro Distributor or Dealer is your sole remedy under this warranty.

Neither The Toro Company nor Toro Warranty Company is liable for indirect, incidental or consequential damages in connection with the use of the Toro Products covered by this warranty, including any cost or expense of providing substitute equipment or service during reasonable periods of malfunction or non-use pending completion of repairs under this warranty. Except for the Emissions warranty referenced below, if applicable, there is no other express warranty.

All implied warranties of merchantability and fitness for use are limited to the duration of this express warranty. Some states do not allow exclusions of incidental or consequential damages, or limitations on how long an implied warranty lasts, so the above exclusions and limitations may not apply to you.

This warranty gives you specific legal rights, and you may also have other rights which vary from state to state.

Countries Other than the United States or Canada

Customers should contact their Toro Distributor (Dealer) to obtain guarantee policies for your country, province, or state. If for any reason you are dissatisfied with your Distributor's service or have difficulty obtaining guarantee information, contact the Toro importer. If all other remedies fail, you may contact us at Toro Warranty Company.