Form No. 3373-387 Rev A

TORO®

Count on it.

Parts Catalog

Road Lights with Brake Lights Kit

Groundsmaster® 3400-D Traction Unit

Model No. 02917—Serial No. 312000001 and Up

CE

Register at www.Toro.com.

Original Instructions (EN)

Ordering Replacement Parts

To order replacement parts, please supply the part number, the quantity, and the description of each part desired.

Understanding Reference Numbers

Each identified part in an illustration has a reference number. The reference number for a part also appears in the parts list, along with other information about the part.

This catalog uses two special reference number formats, one to indicate parts in a service assembly and another to indicate the quantity of a given part in an illustration.

Service Assembly Reference Numbers

Parts in service assemblies have reference numbers in the form a:b. The a represents the reference number of the entire service assembly and the b represents a sequential number unique to each part within the service assembly.

For example, a wheel assembly might be identified by reference number 6, the tire by 6:1, the valve by 6:2, and the wheel by 6:3. When you order the assembly identified by reference number 6, you receive all parts identified by reference numbers 6:1,6:2, and 6:3. However, you may also order any part individually. Reference numbers of this type appear in illustration and in parts lists.

Reference Numbers Indicating Quantity

In an illustration, if a reference number indicates more than one part, the reference number has the form nX y. The n represents the quantity of the part, the X is the multiplication symbol, and the y represents the reference number.

For example, in an illustration, the reference number 2X 37 means that two of the parts identified by reference number 37 are indicated.

List of Abbreviations

AR: as required

ASM: assembly

BBC: blade brake control

BHTF: button head thread forming

CARR: carriage

CCW: counter clockwise

CW: clockwise

DEG: degrees

DPA: Dual Point Adjustment

ECM: electronic control module

EXT: external

FH: flat head

GA: gauge

HD: heavy-duty

HF: hex flange

HH: hex head

HHF: hex head flange

HHFTF: hex head flange thread forming

HJ: hex jam

HLH: hex lag head

HOC: height-of-cut

HSBH: hex socket button head

HSFH: hex socket flat head

HSH: hex socket head

HWH: hex washer head

HWHTF: hex washer head thread forming

HYD: hydraulic

LH: left hand

LPG: Liquid Propane Gas

NI: nylon insert

NPTF: national pipe thread fine

PFH: phillips flat head

PPH: phillips pan head

PPHTF: phillips pan head thread forming

PRH: phillips round head

PTH: phillips truss head

PTO: power-take-off

RH: right hand

ROPS: roll-over protection system

RRB: rear roller brush

SFH: slotted fillister head

SHH: slotted hex head

SHWH: slotted hex washer head

SPH: slotted pan head

SQH: square head

SRH: slotted round head

STD: standard

TAP: self tapping

TTH: torx truss head

Contents

Headlight Mounting Assembly 4
Rear Light Assembly 5
Control Pod Assembly 6

© 2012—The Toro® Company
8111 Lyndale Avenue South
Bloomington, MN 55420

Contact us at www.Toro.com.
Printed in the USA.
All Rights Reserved

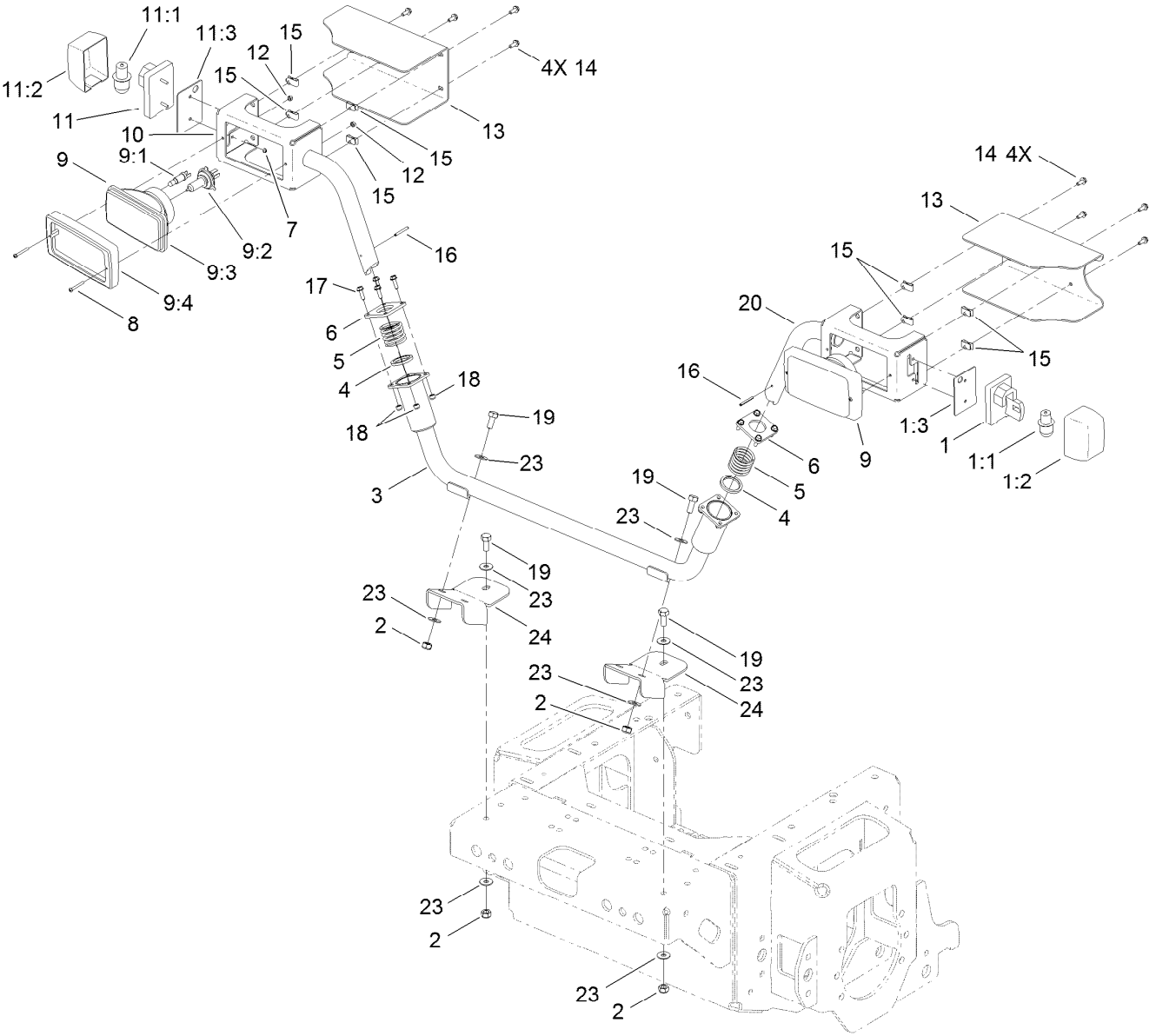

Headlight Mounting Assembly

Ref.	Part Number	Qty.	Description
1	119-8094	1	Lamp-Direction Indicator, LH
1:1	120-7552	1	Bulb-P21W, 12V
1:2	120-7559	1	Lens-Amber
1:3	120-7551	1	Gasket-Lamp
2	ZNN1J000U	4	Nut-Hex, Nyloc
3	119-9863-03	1	Headlight Mount ASM
4	119-9866	2	Washer-Stop
5	92-9726	2	Spring-Compression
6	111-5936	2	Flange-Retainer
7	09657	4	Nut-Insert, NI
8	363-3205	4	Screw-PPH
9	119-8092	2	Headlamp
9:1	120-7562	1	Bulb-T8/4, 12V
9:2	120-7563	1	Bulb-H4, 12V 60/55W
9:3	120-7560	1	Optical Group ASM
9:4	120-7561	1	Frame
10	119-9868-03	1	RH Headlight Mount ASM

Ref.	Part Number	Qty.	Description
11	119-8099	1	Lamp-Direction Indicator, RH
11:1	120-7552	1	Bulb-P21W, 12V
11:2	120-7550	1	Lens-Amber
11:3	120-7551	1	Gasket-Lamp
12	3296-1	4	Nut-Lock
13	111-5937-03	2	Shield-Headlight
14	09365	8	Screw-Taptite
15	410076	8	Nut
16	32121-35	2	Pin-Roll
17	09575	8	Screw-Taptite
18	09544	8	Nut-Nyloc
19	09395	4	Screw-HH
20	119-9867-03	1	LH Headlight Mount ASM
23	HY03355	8	Washer-Plated
24	111-5609-03	2	Bracket-Light, Front
99	111-0318	2	Connector ●
99	111-5816	2	Lead-Connector, Light Front ●

● Not illustrated

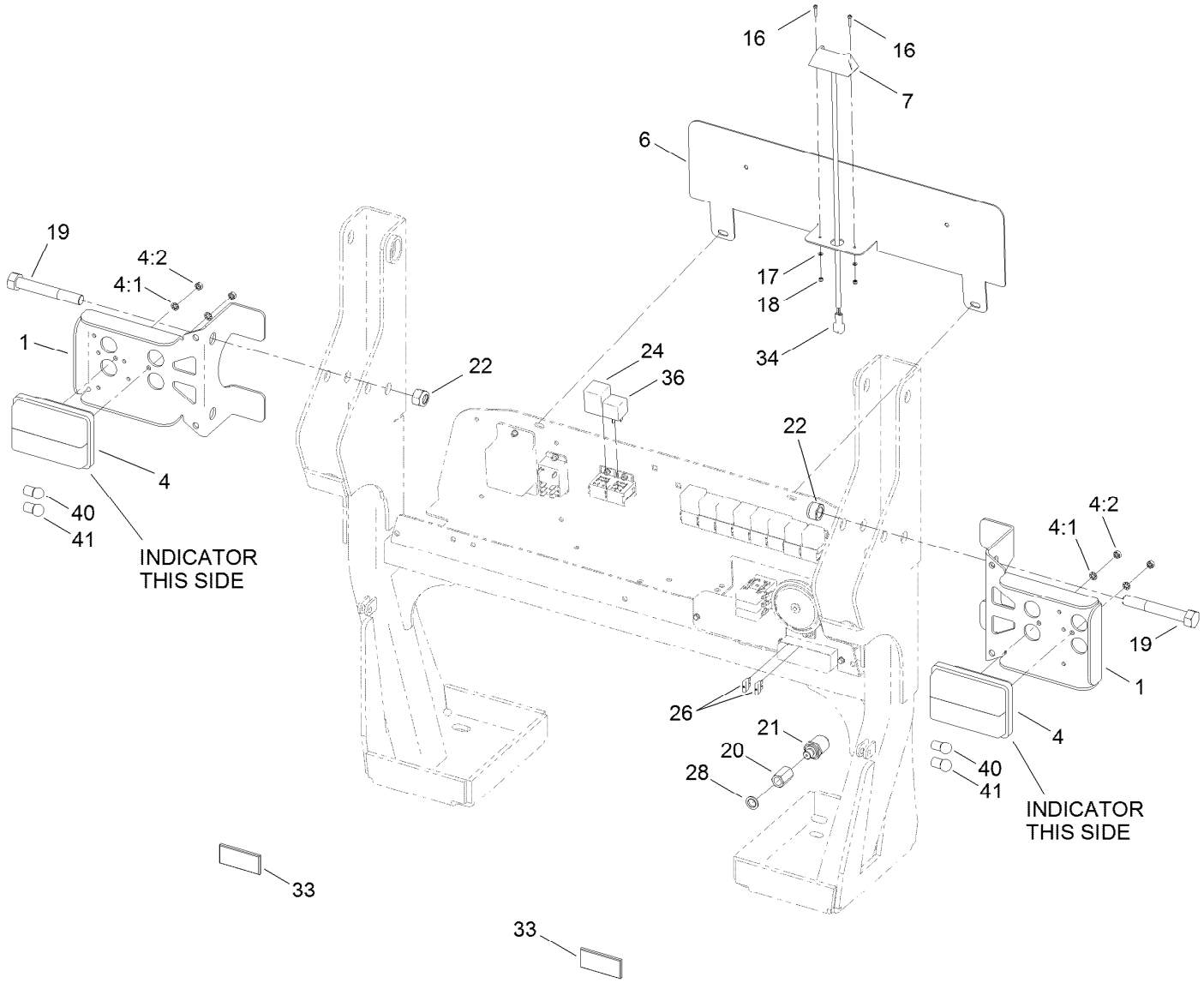

Rear Light Assembly

Ref.	Part Number	Qty.	Description
1	111-5632-03	2	Bracket-Light, Rear
4	70-09-113	2	Lamp-Indicator, Rear
4:1	09473	2	Washer-Shakeproof
4:2	09437	2	Nut
6	111-4710-03	1	Bracket-Number Plate
7	111-3855	1	Plate-Light Number
16	111-3764	2	Setscrew
17	HY09697	2	Washer-Plain
18	HY09698	2	Nut-Nyloc
19	ZBH1P110U	2	Bolt
20	111-3765	1	Adaptor-Switch, Pressure
21	111-5141	1	Switch-Pressure, Brake

Ref.	Part Number	Qty.	Description
22	09456	2	Nut
24	111-0347	1	Relay-Flasher
26	70-09-151	2	Fuse-15A
28	10-06-030	1	Seal-Dowty
33	111-5020	2	Red Reflector-Adhesive
34	924620	1	Connector
36	111-0336	1	Relay-30A
40	70-09-117	2	Bulb-Indicator
41	70-09-119	2	Bulb-Side Light
99	111-5108	1	Cable-Pressure, Switch ●
99	111-5813	2	Lead-Connector, Light Rear ●

● Not illustrated

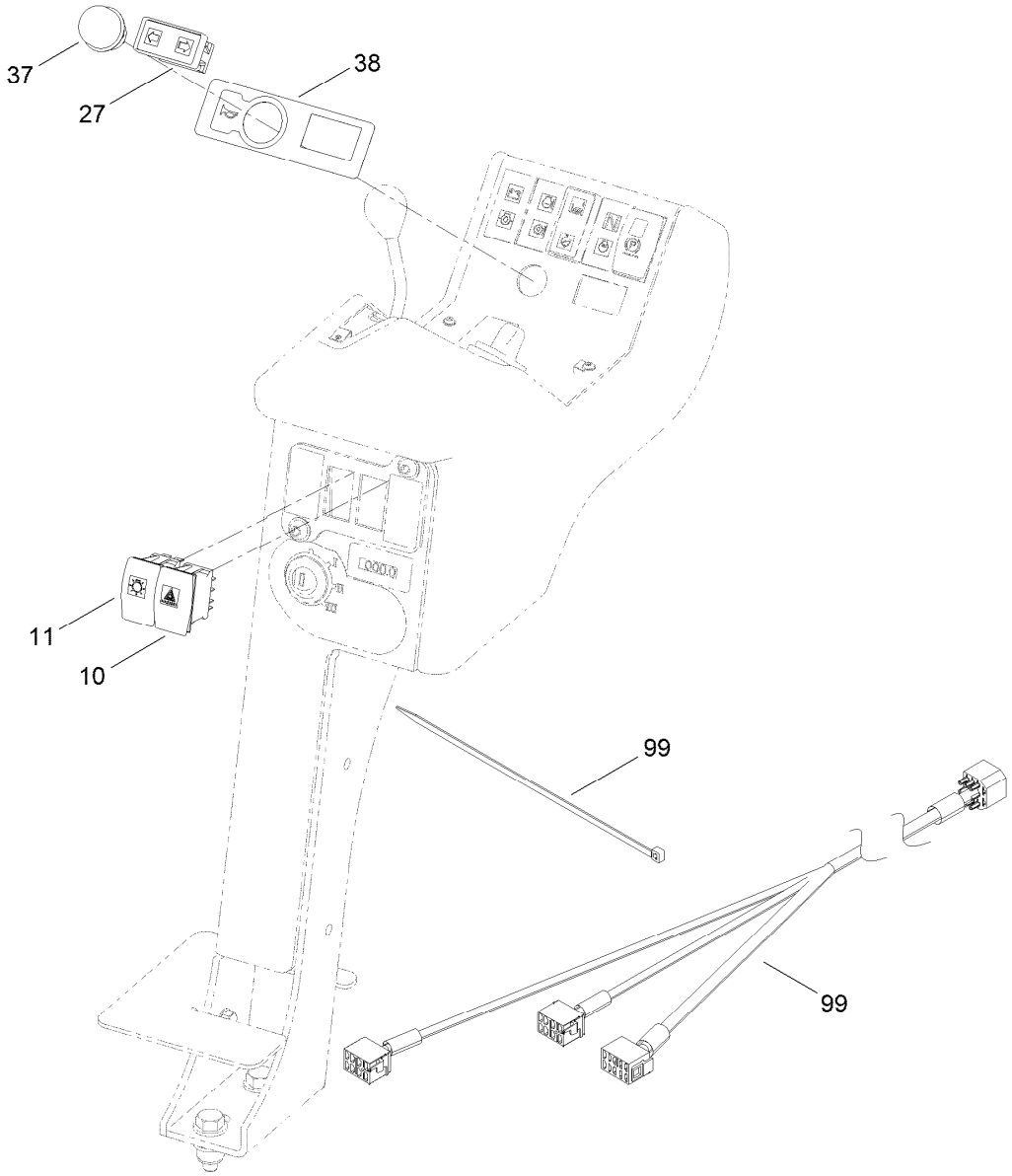

Control Pod Assembly

Ref.	*Part Number*	*Qty.*	*Description*
10	111-2223	1	Switch-Hazard Warning
11	111-2252	1	Switch-Lights
27	111-2244	1	Switch-Indicator
37	924618	1	Switch-Horn, Push
38	111-5234	1	Decal-Horn
99	111-3893	1	Lead-Connector, Instrument Panel
99	74-07-020	10	Tie-Cable ●
99	HY3966	14	Tie-Cable

● Not illustrated

Notes:



Count on it.