FORM NO. 3319–147

TORO®

MODEL NO. 51586–7900001 & UP

PARTS CATALOG

POWER SWEEP BLOWER

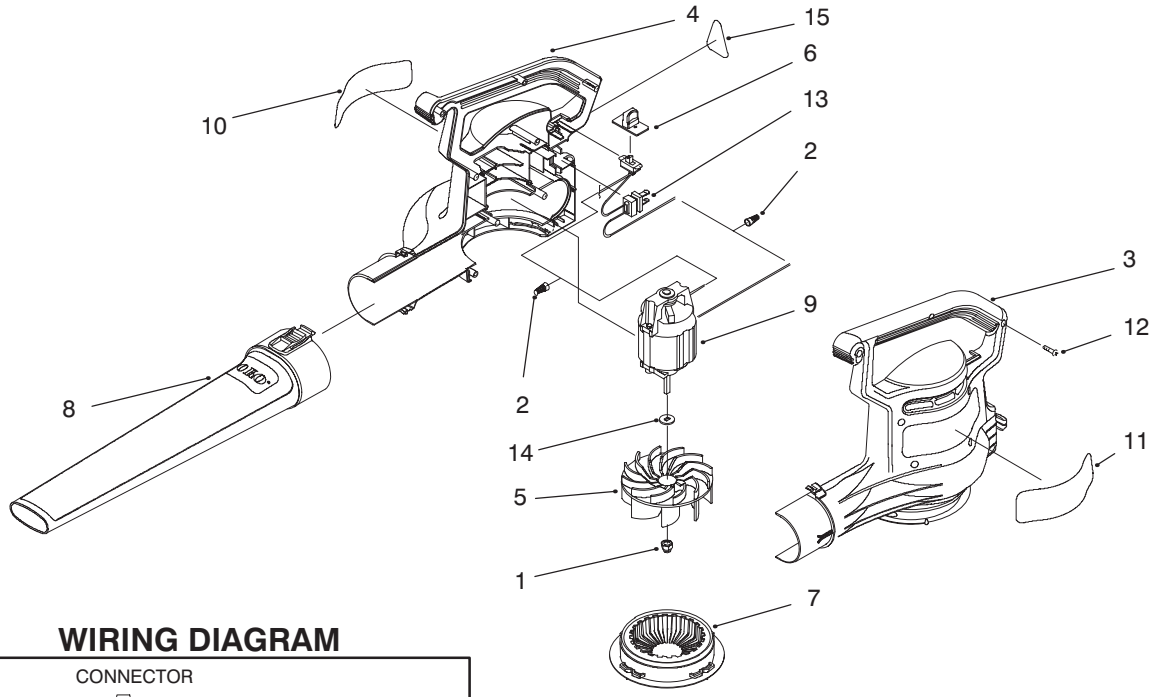

WIRING DIAGRAM

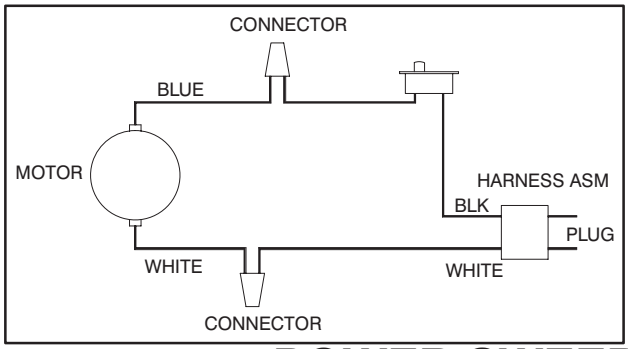

C–2612

POWER SWEEP BLOWER ASSEMBLY

Ref. No.	Part No.	Description	No. Used
1	3296–29	Nut–Hex Lock	1
2	73–6570	Connector–Wire Nut	2
3	95–3021	Housing–LH	1
4	95–3022	Housing–RH	1
5	93–0564	Impeller	1
6	93–0565	Cover–Switch	1
7	94–9320	Cover–Inlet	1
8	93–0571	Tube–Blower	1

Ref. No.	Part No.	Description	No. Used
9	93–0577	Motor	1
10	95–3019	Decal–Logo	1
11	95–4412	Decal–Label	1
12	94–4496	Screw	9
13	93–0578	Harness Assembly	1
14	93–0585	Washer	1
15	95–5106	Decal–Information	1

TPS

©The TORO Company – 1996
All Rights Reserved