Form No. 3373-483 Rev A

TORO®

Count on it.

Operator's Manual

Mauser KS-534 Full Safety Cab Kit

CT2120/CT2140/LT3340 and Groundsmaster® 3400-D Mowers

Model No. 02890—Serial No. 312000001 and Up

CE

To register your product or download an *Operator's Manual* or *Parts Catalog* at no charge, go to www.Toro.com.

Original Instructions (EN)

This product complies with all relevant European directives, for details please see the separate product specific Declaration of Conformity (DOC) sheet.

Introduction

This manual provides instructions for the operation and operator maintenance of the Full Safety Cab.

The Full Safety Cab provides the operator with roll over protection (conforming to ISO:21299) and full weather protection. The Cab is supplied complete with a heating system for operator comfort and to de-mist the windscreen and a sound reduction kit to reduce operator noise levels.

Read this information carefully to learn how to operate and maintain your product properly and to avoid injury and product damage. You are responsible for operating the product properly and safely.

You may contact Toro directly at www.Toro.com for product and accessory information, help finding a dealer, or to register your product.

Whenever you need service, genuine Toro parts, or additional information, contact an Authorized Service Dealer or Toro Customer Service and have the model and serial numbers of your product ready. Figure 1 identifies the location of the model and serial numbers on the product. Write the numbers in the space provided. Write the numbers in the space provided.

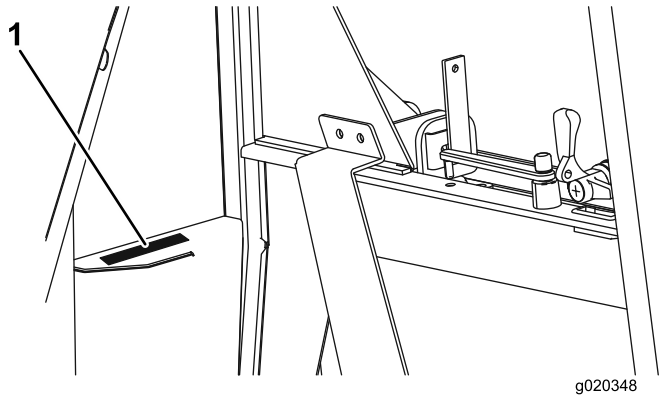

Figure 1

1. Model and serial number location

Model No. _____

Serial No. _____

This manual identifies potential hazards and has safety messages identified by the safety alert symbol (Figure 2), which signals a hazard that may cause serious injury or death if you do not follow the recommended precautions.



Figure 2

1. Safety alert symbol

This manual uses 2 other words to highlight information. **Important** calls attention to special mechanical information and **Note** emphasizes general information worthy of special attention.

Contents

Introduction 2
Safety 3
    Max Slope Angles of Mowers with Cab 3
    Noise Level 4
Product Overview 5
    Controls 5
Operation 7
    Operating the Heating System 7
    Operating the Screen Wiper and Washer 7
    Filling the Screen Washer Bottle 7
    Operating the Windows 7
    Operating the Doors 7
    Adjusting the Mirrors 8
Maintenance 9
    Tilting the Cab 9
    Fuses 9
    Washing the Machine and Cab 9
Schematics 10

© 2012—The Toro® Company
8111 Lyndale Avenue South
Bloomington, MN 55420

Contact us at www.Toro.com.
Printed in the UK.
All Rights Reserved

Safety

⚠ WARNING

Before working on the machine it is essential that:

- **The engine is switched off.**
- **The parking brake is applied.**
- **There is no pressure in the hydraulic system.**
- **The cutting units are fully down on the ground.**

⚠ WARNING

Prevent Accidents

When carrying out maintenance operations always use the appropriate personal protection equipment.

⚠ WARNING

Prevent Accidents

Before working on the machines electrical systems, ALWAYS disconnect the battery terminals (negative terminal first) and ensure no contact is made between the terminals and the machines metalwork.

Important: Always wear the seat belt when the safety cab is fitted.

Important: Refer to your machine Operator Manual for advice and guidance when operating a mower on slopes.

Max Slope Angles of Mowers with Cab

This cab can be fitted to the mowers listed at the front of this document. When fitted with a cab, each mower model will have a different maximum slope angle and this will be stated on the decal located on the lid of the storage pod on the left of the machine. See Figure 3 through Figure 5 for the correct Maximum Slope angle decal for your machine when fitted with a cab. Refer to your machine Operator Manual for the explanation of the symbols on this decal.

⚠ WARNING

The following maximum slope angles take precedence over the maximum slope angle stated in the machine Operator Manual.

CT2120 Model 30655

Part No. 111-5960

Maximum Slope angle 13 degrees

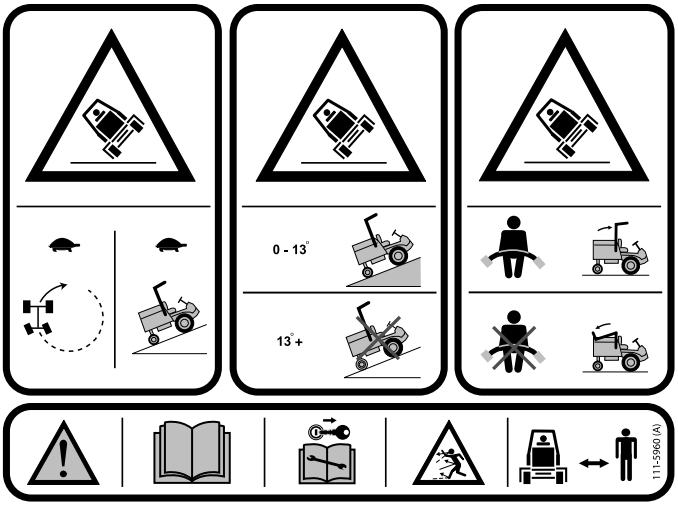

g018416

Figure 3

CT2140 Model 30656 & GM 3400 Model 30651

Part No. 111-1530

Maximum Slope angle 14 degrees

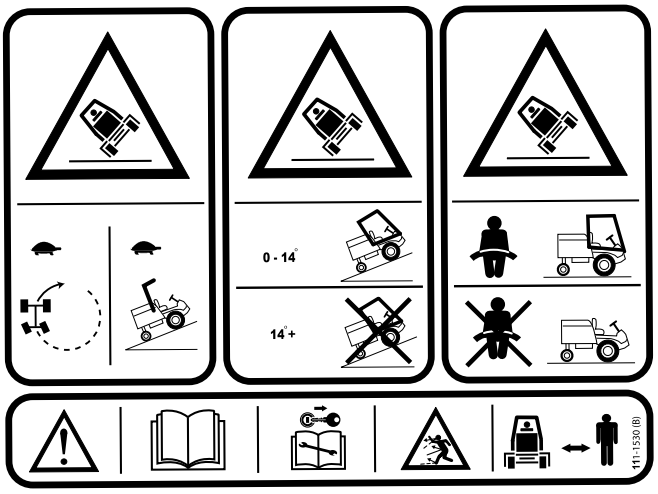

g018431

Figure 4

LT3340 Model 30657

Part No. 111-1530

Maximum Slope angle 16 degrees

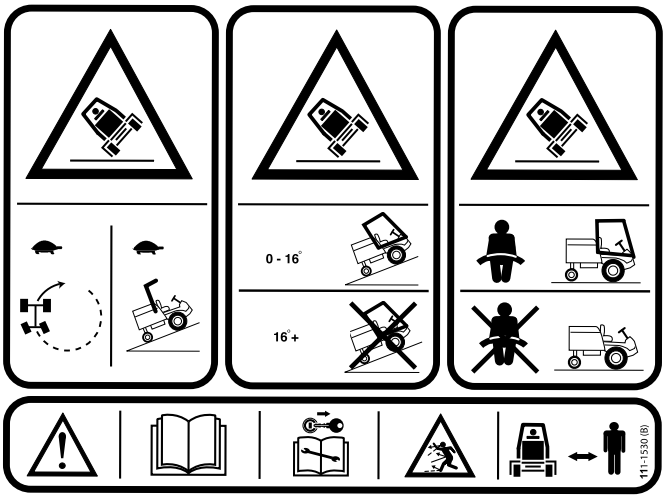

Figure 5

Noise Level

Operator's Daily Personal Noise Exposure: TORO has no control over site conditions, duration of use, degree of cab doors/windows, state of maintenance or adjustment of the mower. All of these factors will affect the operators daily personal exposure level.

Under typical working conditions, operators could be exposed to a daily personal noise exposure level in excess of 80dB(A).

If ear protection is required, ear protectors with good attenuation in the 63 - 8000 Hz frequency range should be used.

Employers of personnel using this machine are advised to read the "Physical agents (noise) Directive" as the operators daily personal exposure level could be above the "First Action Level".

Sound Pressure Level

Models CT2120 & CT2140

These units have a sound pressure level at the operator's ear of 83 dBA, which includes an Uncertainty Value (K) of 1 dBA.

Sound pressure level was determined according to the procedures outlined in EN 836.

Model LT3340

This unit has a sound pressure level at the operator's ear of 80 dBA, which includes an Uncertainty Value (K) of 1 dBA.

Sound pressure level was determined according to the procedures outlined in EN 836.

Model GM3400

This unit has a sound pressure level at the operator's ear of 88 dBA, which includes an Uncertainty Value (K) of 1 dBA.

Sound pressure level was determined according to the procedures outlined in EN 836.

Product Overview

Controls

Heater/Blower Controls

The controls are mounted on the right side in the roof lining.

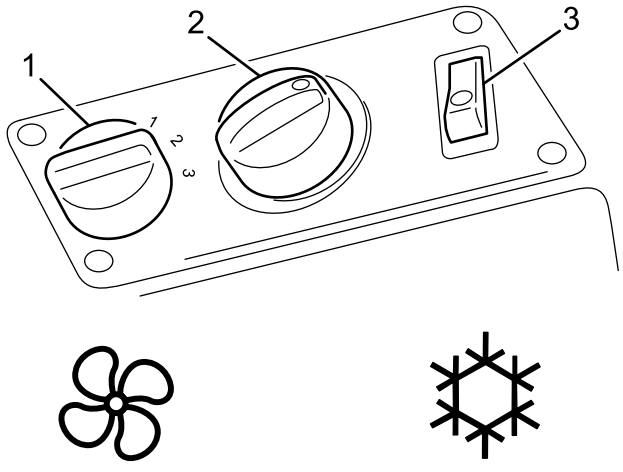

Figure 6

1. Blower speed switch
2. Temperature controller
3. Air conditioner switch (Air Conditioning Optional)

Screen Wiper and Washer Switch

The switch is mounted on the left side in the roof lining.

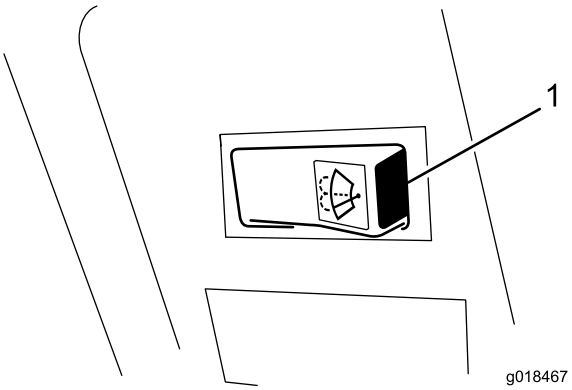

Figure 7

1. Screen wiper/washer switch

Interior Light Switch

Press the front of the interior light switch (Figure 8) to turn on the light. Press the rear of the switch to turn off the light.

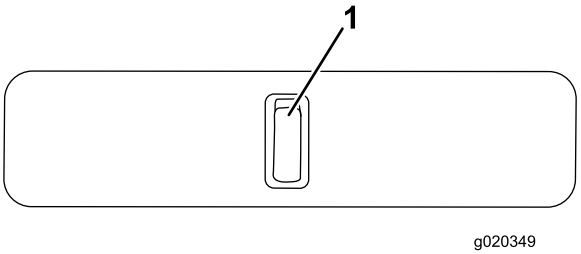

Figure 8

1. Interior light switch

Front Widow Handle (2)

The front window can be opened for ventilation. There are two handles (Figure 9).

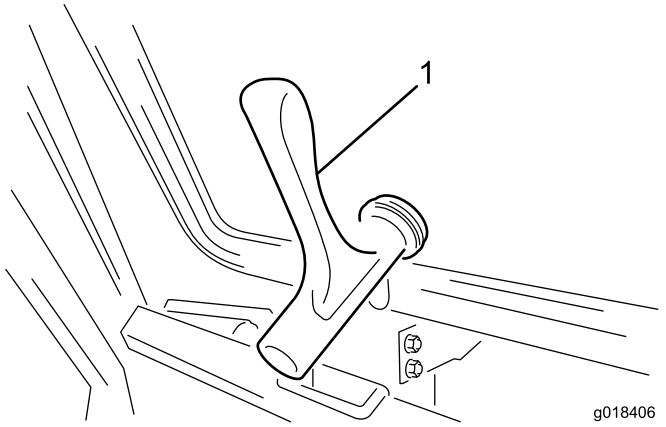

Figure 9

1. Front window handle

Rear Window Handle and Prop

The rear window can be opened for ventilation. Rotate the rear window prop to hold the window open (Figure 10).

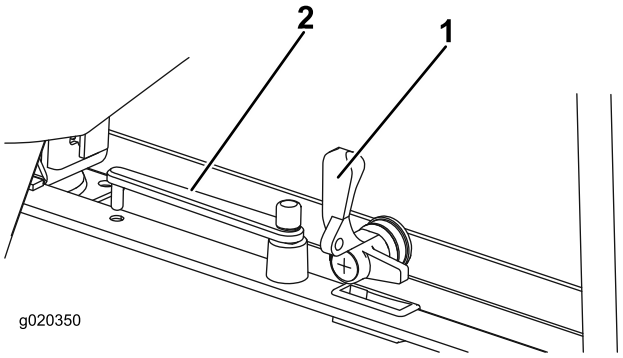

Figure 10

1. Rear window handle
2. Rear window prop

Operation

Note: Determine the left and right sides of the machine from the normal operating position.

Operating the Heating System

1. Set the air conditioner switch to OFF.
2. Set the fan speed switch to the desired speed.
3. Set the temperature regulator to the required setting.
4. The two air vents in the roof console can be rotated and angled to achieve the desired air direction.

Operating the Screen Wiper and Washer

1. Press the right side of the switch to start the screen wipers.
2. Press and hold the switch to operate the screen washers.
3. Press the left side of the switch to stop the screen wipers.

Filling the Screen Washer Bottle

Fill the bottle with clean water plus the recommended quantity of propriety windscreen washing fluid (Figure 11).

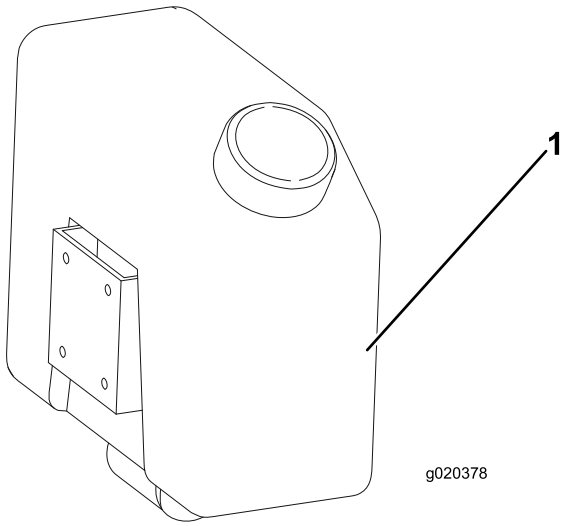

Figure 11

1. Screen washer bottle

⚠ WARNING

If you operate your machine in temperatures below 5 degrees C (40 degrees F), use washer fluid with antifreeze protection. Failure to use washer fluid with antifreeze protection in cold weather could result in impaired windscreen vision and increase the risk of injury or accident.

Operating the Windows

Front Window

1. Rotate the handles anticlockwise and push the window open.
2. Rotate the handles clockwise to lock the window open.
3. To close the window, rotate the handles anticlockwise, pull the window closed and rotate the handles clockwise to lock it.

Rear Window

The rear window can be opened by rotating the single handle to unlock it. It will continue to fully open on its gas springs. Rotate the window prop against the window handle to hold it open.

To close the rear window, rotate the prop away from the window, pull it closed and rotate the handle to lock it.

Operating the Doors

To open the door from outside the cab, press the door latch handle knob while opening the door (Figure 12).

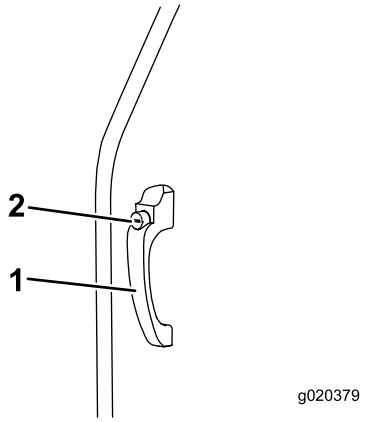

Figure 12

1. Door latch handle
2. Door latch knob

To open the door from inside the cab, pull back on the door lock release lever while opening the door (Figure 13).

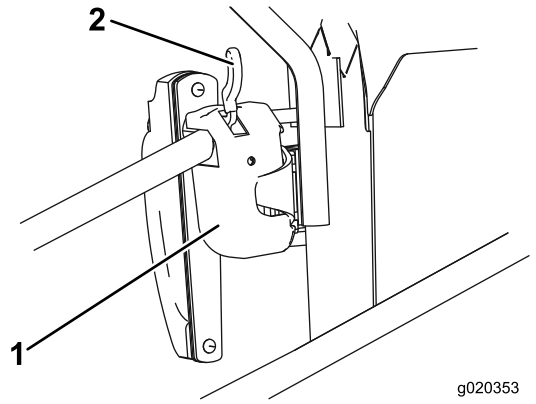

Figure 13

1. Door lock
2. Release lever

Adjusting the Mirrors

While the sitting in the seat, have a helper adjust the side view mirrors to attain the best view around the side of the machine (Figure 14).

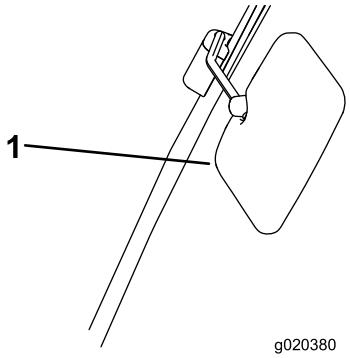

Figure 14

1. Side view mirror

Maintenance

Important: Maintenance or repairs, on the heating system, should be carried out by a Toro dealer or a specialist in vehicle heating systems.

Tilting the Cab

The cab has a tilting facility to enable access under the operator platform for cleaning and maintenance.

The cab and the operator platform tilt as one unit. The angle of tilt is less than that of a platform without a cab. This is the ensure that, owing to the weight and position of the tilted cab, the machine has sufficient stability when the cab is tilted.

To tilt the cab

1. Rotate the two locking levers, located on the cross beam at the rear of the cab, so that they point upward (Figure 15).

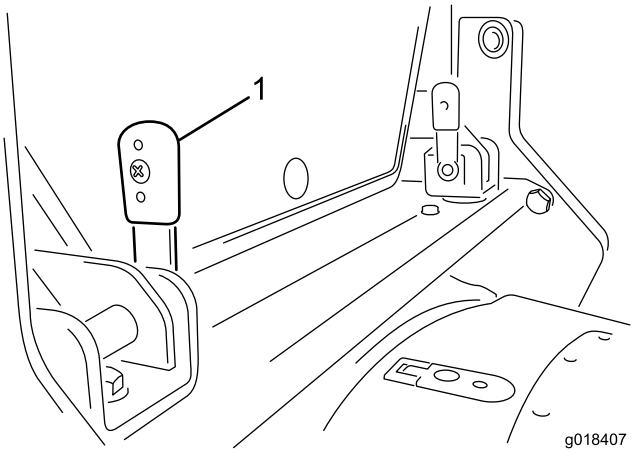

Figure 15

1. Locking lever (2) - rotated upward (vertical)

2. Slide the levers inwards to remove them from the brackets. This might require some wriggling as (a) the levers might be stiff in their brackets and (b) their removal requires the alignment of locking pegs with slots in the brackets to allow them to be withdrawn.
3. On both sides of the cab, on the rear corner post, there is a grab handle so the cab can be raised from either side. Push upwards on one of these handles. The inbuilt gas springs will assist in raising the cab in a controlled manner and will stop it when fully raised.

To lower the cab

1. Pull down on one of the grab handles to lower the cab so that the brackets on the rear of the cab locate between the brackets on the crossbeam.
2. With the levers in the vertical position (Figure 15), push them through the sets of brackets. It might be necessary to wriggle the levers into the brackets to align the locking pegs in the slots.
3. When the levers are fully inserted, rotate them backwards to lock them in position (Figure 16).

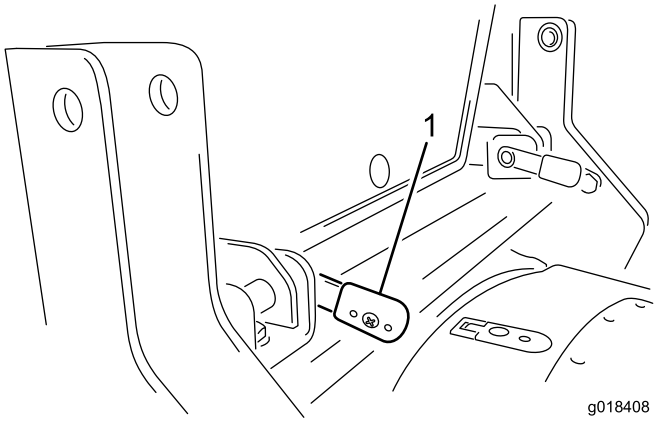

Figure 16

1. Locking lever (2) - rotated downward (horizontal)

Fuses

The cab fuses are located in the fuse box on the cab headliner (Figure 17).

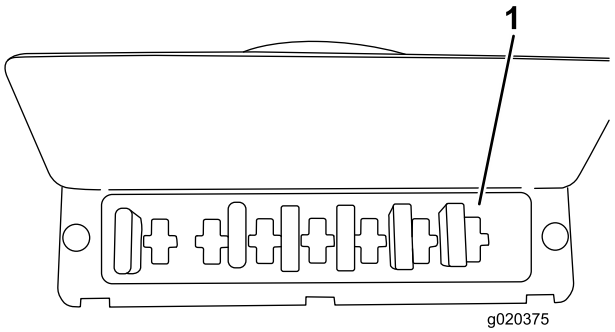

Figure 17

1. Cab fuse block

Washing the Machine and Cab

When washing the machine and the cab -

1. Do not direct water into the roof area.
2. Do not direct high pressure water at the sound deadening pads on the underside of the platform as this could loosen the adhesive or penetrate the waterproof covering of the pads. Use garden hose pressure.

Schematics

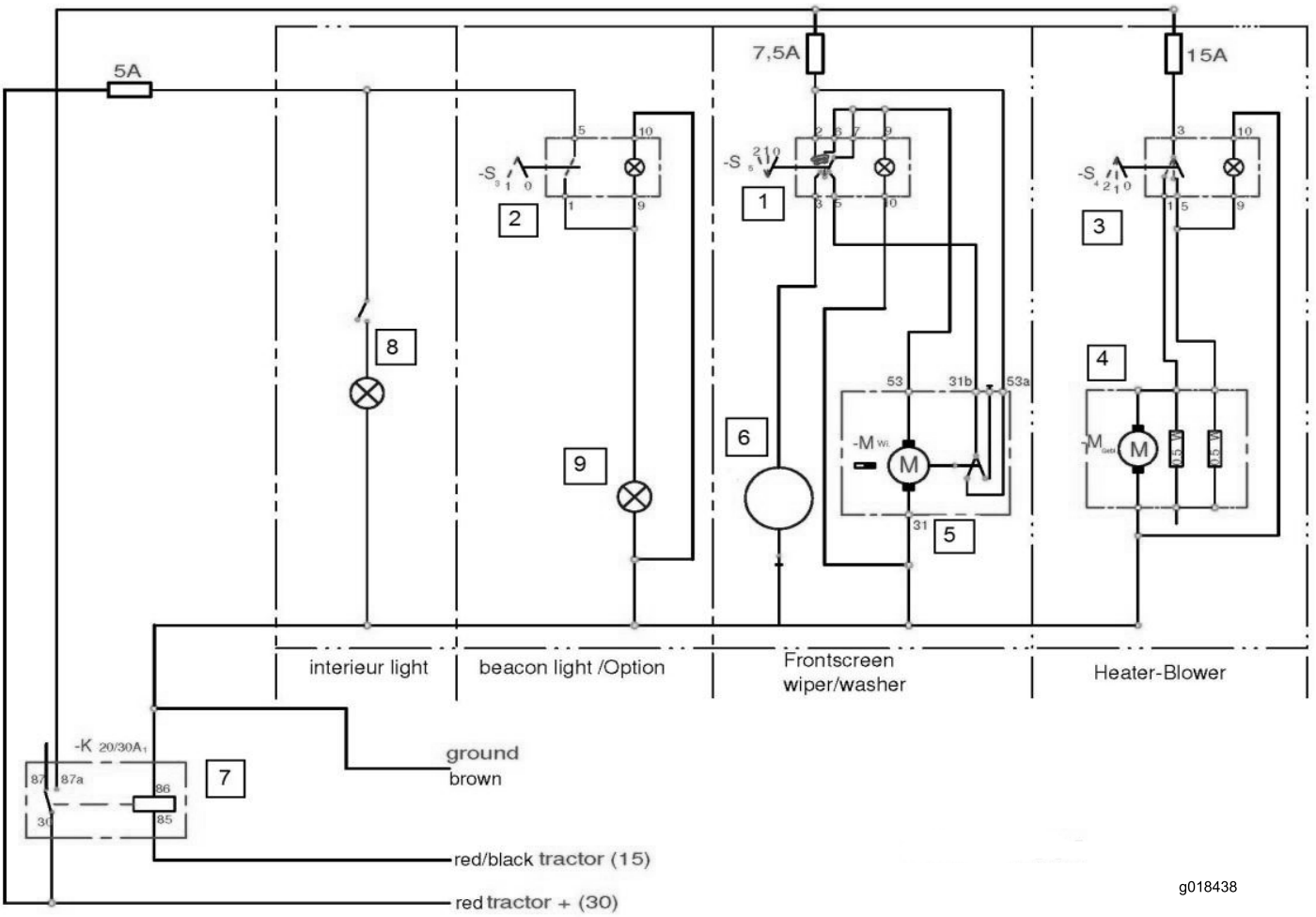

1	Front screen wiper and washer switch
2	Beacon switch (when beacon kit fitted)
3	Three position switch for Blower speed
4	Blower motor
5	Front screen wiper motor
6	Front screen washer pump
7	Main relay
8	Interior light and switch
9	Beacon (when beacon kit fitted)

Electrical Circuit Diagram (Rev. -)

Intl Dist List

Distributor:	Country:	Phone Number:
Atlantis Su ve Sulama Sisstemleri Lt	Turkey	90 216 344 86 74
Balama Prima Engineering Equip.	Hong Kong	852 2155 2163
B-Ray Corporation	Korea	82 32 551 2076
Casco Sales Company	Puerto Rico	787 788 8383
Ceres S.A.	Costa Rica	506 239 1138
CSSC Turf Equipment (pvt) Ltd.	Sri Lanka	94 11 2746100
Cyril Johnston & Co.	Northern Ireland	44 2890 813 121
Equiver	Mexico	52 55 539 95444
Femco S.A.	Guatemala	502 442 3277
G.Y.K. Company Ltd.	Japan	81 726 325 861
Geomechaniki of Athens	Greece	30 10 935 0054
Guandong Golden Star	China	86 20 876 51338
Hako Ground and Garden	Sweden	46 35 10 0000
Hako Ground and Garden	Norway	47 22 90 7760
Hayter Limited (U.K.)	United Kingdom	44 1279 723 444
Hydroturf Int. Co Dubai	United Arab Emirates	97 14 347 9479
Hydroturf Egypt LLC	Egypt	202 519 4308
Irriamc	Portugal	351 21 238 8260
Irrigation Products Int'l Pvt Ltd.	India	86 22 83960789
Jean Heybroek b.v.	Netherlands	31 30 639 4611
Maquiver S.A.	Colombia	57 1 236 4079
Maruyama Mfg. Co. Inc.	Japan	81 3 3252 2285
Metra Kft	Hungary	36 1 326 3880
Mountfield a.s.	Czech Republic	420 255 704 220
Munditol S.A.	Argentina	54 11 4 821 9999
Oslinger Turf Equipment SA	Ecuador	593 4 239 6970
Oy Hako Ground and Garden Ab	Finland	358 987 00733
Parkland Products Ltd.	New Zealand	64 3 34 93760
Prato Verde S.p.A	Italy	39 049 9128 128
Prochaska & Cie	Austria	43 1 278 5100
RT Cohen 2004 Ltd.	Israel	972 986 17979
Riversa	Spain	34 9 52 83 7500
Sc Svend Carlsen A/S	Denmark	45 66 109 200
Solvert S.A.S.	France	33 1 30 81 77 00
Spypros Stavrinides Limited	Cyprus	357 22 434131
Surge Systems India Limited	India	91 1 292299901
T-Markt Logistics Ltd.	Hungary	36 26 525 500
Toro Australia	Australia	61 3 9580 7355
Toro Europe NV	Belgium	32 14 562 960

The Toro Total Coverage Guarantee

A Limited Warranty

Conditions and Products Covered

The Toro® Company and its affiliate, Toro Warranty Company, pursuant to an agreement between them, jointly warrant your Toro Commercial product ("Product") to be free from defects in materials or workmanship for two years or 1500 operational hours*, whichever occurs first. This warranty is applicable to all products with the exception of Aerators (refer to separate warranty statements for these products). Where a warrantable condition exists, we will repair the Product at no cost to you including diagnostics, labor, parts, and transportation. This warranty begins on the date the Product is delivered to the original retail purchaser.
* Product equipped with an hour meter.

Instructions for Obtaining Warranty Service

You are responsible for notifying the Commercial Products Distributor or Authorized Commercial Products Dealer from whom you purchased the Product as soon as you believe a warrantable condition exists. If you need help locating a Commercial Products Distributor or Authorized Dealer, or if you have questions regarding your warranty rights or responsibilities, you may contact us at:

Commercial Products Service Department
Toro Warranty Company
8111 Lyndale Avenue South
Bloomington, MN 55420-1196
E-mail: commercial.warranty@toro.com

Owner Responsibilities

As the Product owner, you are responsible for required maintenance and adjustments stated in your Operator's Manual. Failure to perform required maintenance and adjustments can be grounds for disallowing a warranty claim.

Items and Conditions Not Covered

Not all product failures or malfunctions that occur during the warranty period are defects in materials or workmanship. This warranty does not cover the following:

- Product failures which result from the use of non-Toro replacement parts, or from installation and use of add-on, or modified non-Toro branded accessories and products. A separate warranty may be provided by the manufacturer of these items.
- Product failures which result from failure to perform recommended maintenance and/or adjustments. Failure to properly maintain your Toro product per the Recommended Maintenance listed in the *Operator's Manual* can result in claims for warranty being denied.
- Product failures which result from operating the Product in an abusive, negligent or reckless manner.
- Parts subject to consumption through use unless found to be defective. Examples of parts which are consumed, or used up, during normal Product operation include, but are not limited to, brakes pads and linings, clutch linings, blades, reels, bed knives, tines, castor wheels, tires, filters, belts, and certain sprayer components such as diaphragms, nozzles, and check valves, etc.
- Failures caused by outside influence. Items considered to be outside influence include, but are not limited to, weather, storage practices, contamination, use of unapproved coolants, lubricants, additives, fertilizers, water, or chemicals, etc.
- Normal noise, vibration, wear and tear, and deterioration.
- Normal "wear and tear" includes, but is not limited to, damage to seats due to wear or abrasion, worn painted surfaces, scratched decals or windows, etc.

Parts

Parts scheduled for replacement as required maintenance are warranted for the period of time up to the scheduled replacement time for that part. Parts replaced under this warranty are covered for the duration of the original product warranty and become the property of Toro. Toro will make the final decision whether to repair any existing part or assembly or replace it. Toro may use remanufactured parts for warranty repairs.

Note Regarding Deep Cycle Battery Warranty:

Deep cycle batteries have a specified total number of kilowatt-hours they can deliver during their lifetime. Operating, recharging, and maintenance techniques can extend or reduce total battery life. As the batteries in this product are consumed, the amount of useful work between charging intervals will slowly decrease until the battery is completely worn out. Replacement of worn out batteries, due to normal consumption, is the responsibility of the product owner. Battery replacement may be required during the normal product warranty period at owner's expense.

Maintenance is at Owner's Expense

Engine tune-up, lubrication cleaning and polishing, replacement of Items and Conditions Not Covered filters, coolant, and completing Recommended Maintenance are some of the normal services Toro products require that are at the owner's expense.

General Conditions

Repair by an Authorized Toro Distributor or Dealer is your sole remedy under this warranty.

Neither The Toro Company nor Toro Warranty Company is liable for indirect, incidental or consequential damages in connection with the use of the Toro Products covered by this warranty, including any cost or expense of providing substitute equipment or service during reasonable periods of malfunction or non-use pending completion of repairs under this warranty. Except for the Emissions warranty referenced below, if applicable, there is no other express warranty.

All implied warranties of merchantability and fitness for use are limited to the duration of this express warranty. Some states do not allow exclusions of incidental or consequential damages, or limitations on how long an implied warranty lasts, so the above exclusions and limitations may not apply to you.

This warranty gives you specific legal rights, and you may also have other rights which vary from state to state.

Countries Other than the United States or Canada

Customers should contact their Toro Distributor (Dealer) to obtain guarantee policies for your country, province, or state. If for any reason you are dissatisfied with your Distributor's service or have difficulty obtaining guarantee information, contact the Toro importer. If all other remedies fail, you may contact us at Toro Warranty Company.