Form No. 3366-937 Rev B

Road Certification and Light Kit

EU Groundsmaster 360 Multi-Purpose Machine without cab

Model No. 30512

Installation Instructions

Installation

Loose Parts

Use the chart below to verify that all parts have been shipped.

Procedure	Description	Qty.	Use
1	No parts required	–	Initial Preparation
2	No parts required	–	Floor plate access hole
3	Column bracket assembly Horn assembly Column bracket mount Carriage screw, 3/8 inch x 1 inch Flange nut, 3/8 inch Column cover Screw	1 1 1 2 2 1 2	Install the switch column assembly
4	Head light assembly w/ wire harness Flange head screw, 3/8 x 1–1/2 inch Flange nut, 3/8 inch	1 2 2	Install the head lights
5	Work light Light bracket U-bolt Lock nut, 3/8 inch	1 1 2 8	Install the work light
6	Horn assembly Screw, 5/16 x 3/4 inch Flange head nut, 5/16 inch	1 1 1	Install the horn
7	Rear lamp assembly - L.H. Rear lamp assembly - R.H. Washer head screw, 3/8 x 3/4 inch	1 1 4	Install the rear lamps
8	Grommet Cable tie, 7–1/4 inch (184 mm) Cable tie, 14–1/2 inch (368 mm)	1 13 2	Connect the wire harness
9	No parts required	–	Final Procedures

Media and Additional Parts

Description	Qty.	Use
Installation instructions	1	Use to install kit
Parts catalog	1	Use to reference part numbers

© 2012—The Toro® Company
8111 Lyndale Avenue South
Bloomington, MN 55420

Register at www.Toro.com.

Original Instructions (EN)
Printed in the USA.
All Rights Reserved

1

Initial Preparation

No Parts Required

Procedure

1. Park the machine on a level surface, stop the engine, engage the parking brake and remove the key from the ignition switch.
2. Disconnect the negative (–) battery cable from the battery.

⚠ WARNING

Wear safety goggles and rubber gloves when working with batteries. Since the gases are explosive, keep open flames and electrical spark away from batteries. Do not smoke.

3. Press the steering column pedal down, pivot the steering tower forward as far as possible and then release the pedal
4. Move the seat latch, located on the left side of the seat, rearward to unlatch the seat and pull forward on the top of the seat until the seat latch catches supporting seat plate (Figure 1).

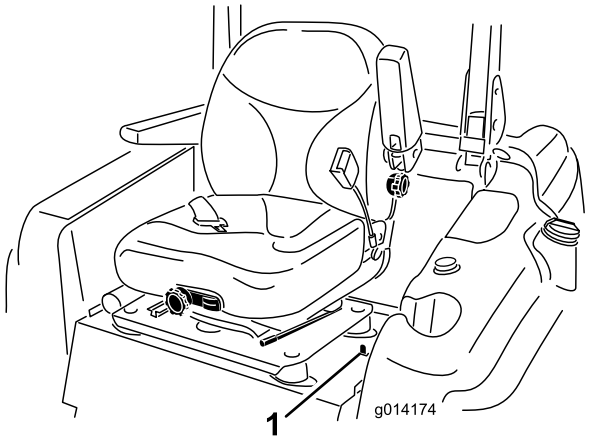

Figure 1

1. Seat latch

5. Raise and secure the hood as follows:
   - Release the hood latches.
   - Lift up on the hood until the prop rod can be positioned behind the frame tube (Figure 2).

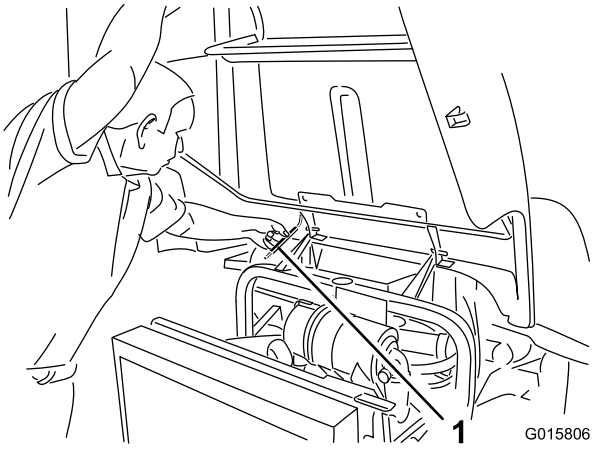

Figure 2

1. Prop rod

   - Lower the hood until the rod is in front of and resting against the frame tube.

2

Floor Plate Access Hole

No Parts Required

Procedure

1. Remove the knockout plug, located between the brake pedal and the steering column in the floor plate (Figure 3). If the floor plate does not have a knock out plug, proceed to the next step for drilling instructions.

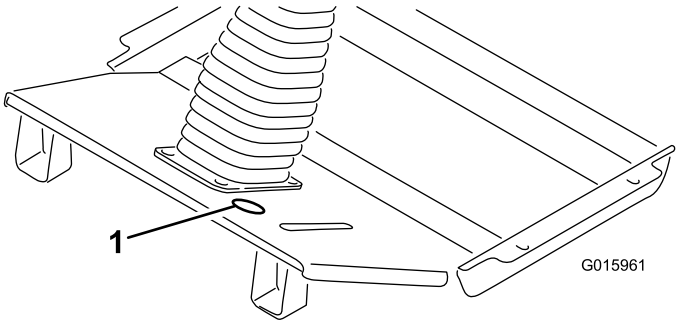

Figure 3

1. Knockout plug location

2. Using the dimensions in shown in Figure 4, locate, mark and drill a 2 inch (51 mm) diameter hole in the floor plate.

   Note: When drilling through the floor plate, use caution not to hit the hydraulic line directly below the hole location.

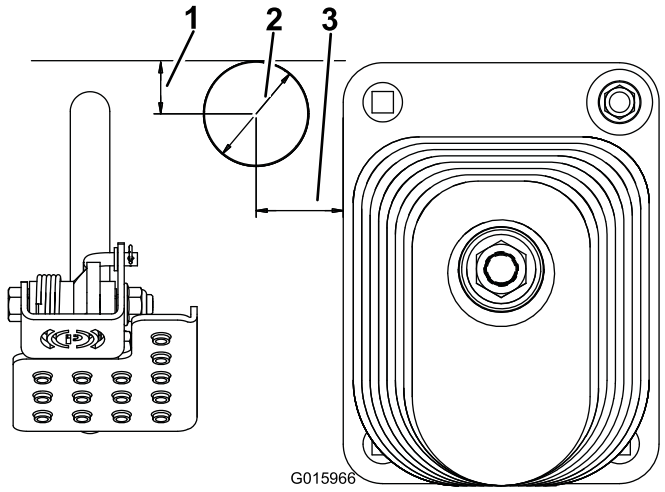

Figure 4

1. 1 inch (25 mm)
2. 2 inch diameter (51 mm)
3. 1–5/8 inches (41 mm)

3. Remove all burrs and rough edges from the drilled hole. Paint the newly exposed metal to prevent rusting.

3

Installing the Switch Column Assembly

Parts needed for this procedure:

1	Column bracket assembly
1	Horn assembly
1	Column bracket mount
2	Carriage screw, 3/8 inch x 1 inch
2	Flange nut, 3/8 inch
1	Column cover
2	Screw

Procedure

1. Mount the horn switch to the column bracket with the rubber horn button (). Do not use the silver button
2. Mount the column bracket assembly to the rear of steering column with the column bracket mount, (2) 3/8 inch x 1 inch carriage screws and 3/8 inch flange nuts. Position the column bracket as high as possible on the steering column as shown in Figure 5. Make sure the column bracket does not interfere with the steering wheel.

Note: Over tightening the carriage screws/flange nuts may distort the column bracket prohibiting the cover from being installed.

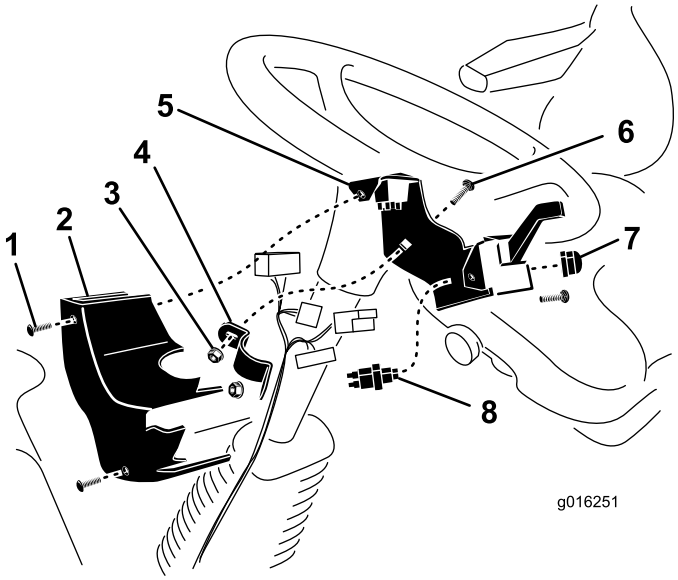

Figure 5

1. Screw (2)
2. Column cover
3. Flange nut
4. Column bracket mount
5. Column bracket assembly
6. Carriage screw
7. Horn button
8. Horn switch

3. After the wire harness is connected to the switches, mount the column cover to the column bracket (2) speed nuts with screws (Figure 5).

4

Installing the Head Lights

Parts needed for this procedure:

1	Head light assembly w/ wire harness
2	Flange head screw, 3/8 x 1–1/2 inch
2	Flange nut, 3/8 inch

Procedure

Note: Make sure the wire harness exits the rear of the head light mount tube.

Secure the headlight mount to the platform with (2) 3/8 x 1–1/2 inch flange head screws and 3/8 inch flange nuts as shown in Figure 6.

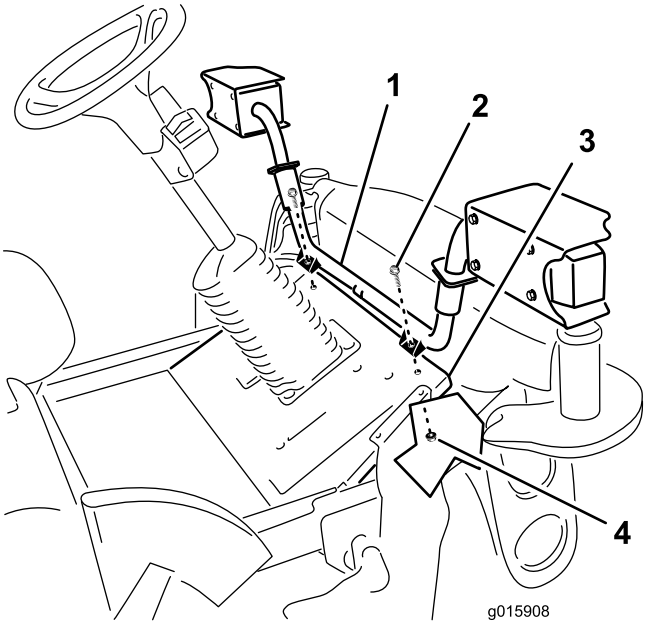

Figure 6

1. Headlight mount
2. Flange head screw
3. Platform
4. Flange nut

5

Installing the Work Light

Parts needed for this procedure:

1	Work light
1	Light bracket
2	U-bolt
8	Lock nut, 3/8 inch

Procedure

1. Mount the light bracket to the inside of the ROPS with (2) U–bolts and (2) (3/8–16) locknuts positioning as shown in Figure 7.

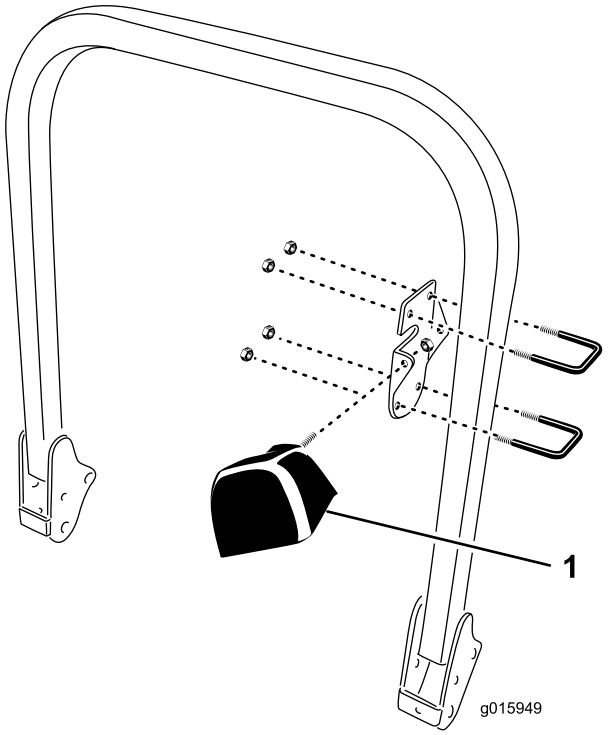

Figure 7

1. Work light

Note: The light can be mounted to the rear of the bracket to shine rearward (as shown), to the front of the bracket to shine forward or pointed to the side to illuminate the edge of the mower deck.

Note: The light is not as protected when mounted to the side of the brackets. Watch out for tree limbs.

Note: Mount the light as high as possible on the ROPS. The light may have to be repositioned if a canopy is installed.

2. Tighten the locknuts evenly to avoid distorting the light bracket.

6

Installing the Horn

Parts needed for this procedure:

1	Horn assembly
1	Screw, 5/16 x 3/4 inch
1	Flange head nut, 5/16 inch

Procedure

1. Remove the (2) screws and washers securing the front cover to the front axle brackets (Figure 8). Remove the front cover.

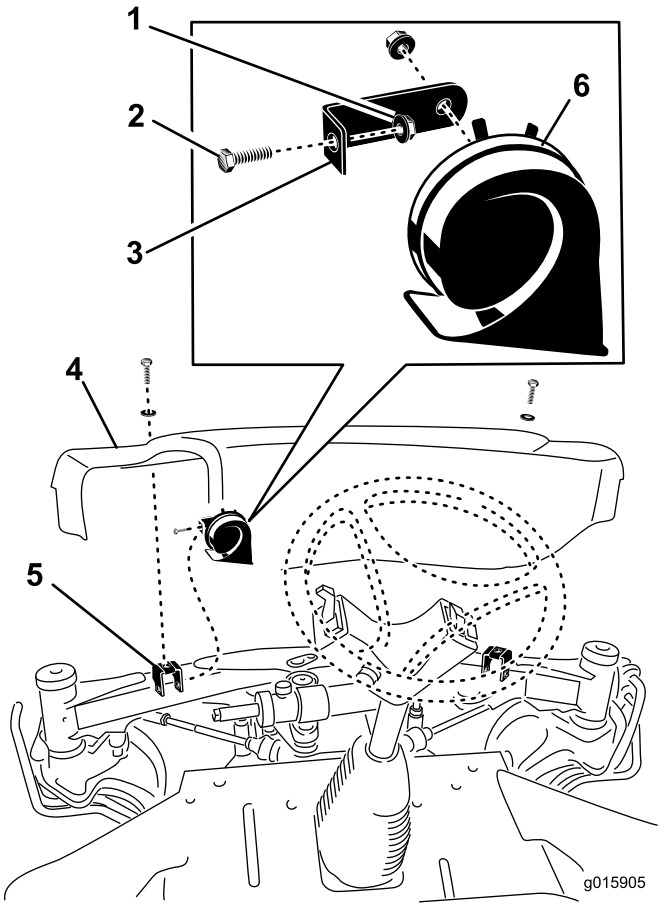

Figure 8

1. Flange head nut
2. Screw
3. Horn bracket
4. Front cover
5. Front axle bracket
6. Horn

2. Mount the horn bracket to the left cover mounting bracket with the 5/16 x 3/4 inch screw and 5/16 inch flange head nut (Figure 8).
3. Adjust the horn so the opening points down.
4. After the wire harness is connected to the horn, mount the front cover to the front axle with the (2) screws previously removed.

7

Installing the Rear Lamps

Parts needed for this procedure:

1	Rear lamp assembly - L.H.
1	Rear lamp assembly - R.H.
4	Washer head screw, 3/8 x 3/4 inch

Procedure

1. Using the mounting holes to the rear of the hood latches, secure a lamp assembly to each side of the rear frame with (2) 3/8 x 3/4 inch washer head screws (Figure 9). If the mounting holes are not in the rear frame, process to the next step

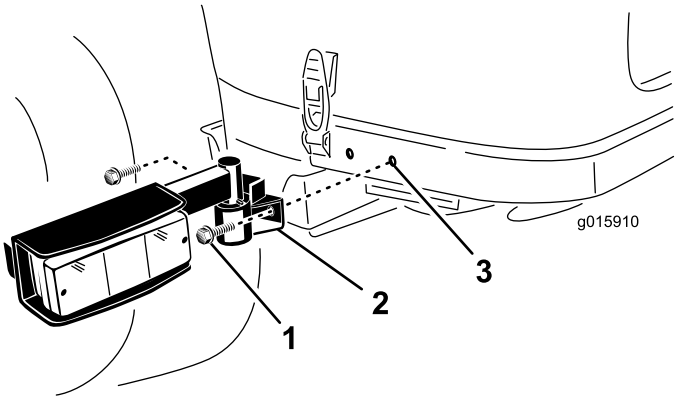

Figure 9

1. Washer head screw
2. Lamp assembly
3. Mounting hole

2. Using the dimensions shown in Figure 10, locate, mark and drill (2) .350 inch (9mm) diameter holes in each side of the rear frame. Center the holes up and down on the frame.

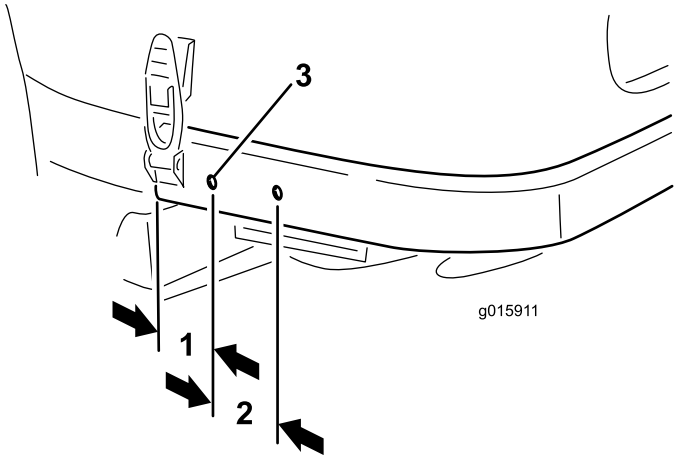

Figure 10

1. 2.25 inches (57 mm)
2. 2.55 inches (65 mm)
3. .350 inch diameter (9mm)

3. Remove all burrs and rough edges from the drilled holes. Paint the newly exposed metal to prevent rusting.

8

Connecting the Wire Harness

Parts needed for this procedure:

1	Grommet
13	Cable tie, 7–1/4 inch (184 mm)
2	Cable tie, 14–1/2 inch (368 mm)

Procedure

Route, connect and secure the wire harness as follows:

- Route the harness with the (5) connectors up the steering column and plug them into the appropriate connectors. Cable tie the harness to the steering column with cable ties.
- Insert the remainder of the harness through the knockout hole in the floor plate (Figure 11).

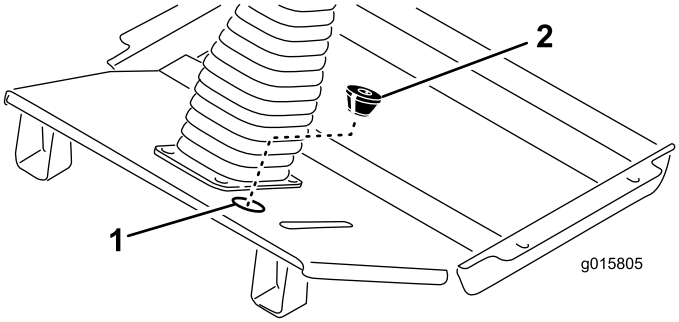

Figure 11

1. Knockout plug location
2. Grommet

- Cut a slit in the supplied grommet and cut out the bottom opening (Figure 11). With the cone end of the grommet facing down, wrap it around the harness and insert it into the knockout hole in the floor plate.
- Route the harness to horn and connect the two wires to the terminals (Figure 12).

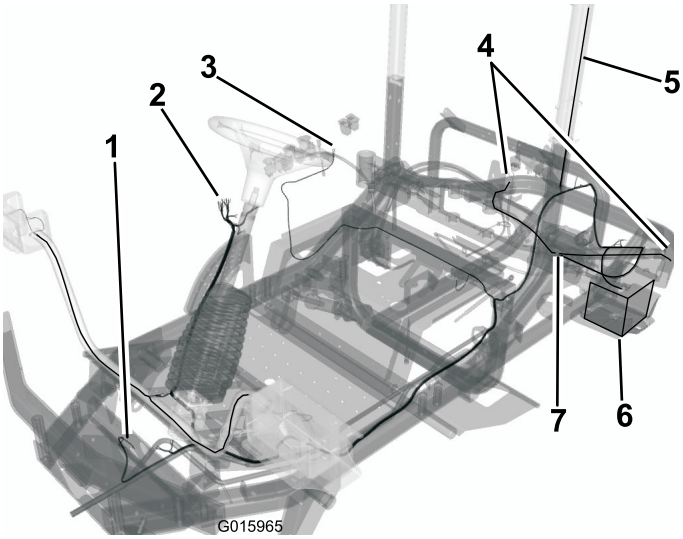

Figure 12

1. Horn connection
2. Switch connection
3. Accessory connection
4. Rear lamp connections
5. Work light connector
6. Battery connection

- Following the existing harness, route the harness along the underside of the seat support bracket to the control panel on the right side of the machine.
- Remove the (5) screws securing the control panel to the tank cover.
- Raise the control panel and locate the wire harness connector labeled **Accessory.**
- Route the harness connector up to the accessory connector and plug it in.

- Install the control panel to the tank cover with the screws removed. Torque the screws to 25 in-lbs (2.8 N-m). **Do not over tighten the screws.**
- Route and connect the small harness ring terminal to the ground block.
- Route the work light harness to and up the ROPS tube through the gap between the storage compartment and the hydraulic tank cover. Secure the harness to the ROPS tube with cable ties.
- Route and connect the harness ring terminal to the positive (+) battery post.
- Route the harness along the existing harness and frame tube to the left rear lamp harness. Plug the harness connector into the lamp harness connector. Secure the harness to the existing harness and frame tube with cable ties.
- Route the harness along the existing harness and frame tube to the right rear lamp harness connector. Plug the harness connector into the lamp harness connector. Secure the harness to the existing harness and frame tube with cable ties.

Important: Make sure the harness is clear of all hot, sharp or moving components.

9

Final Procedures

No Parts Required

Procedure

1. Pull up on the seat latch release bar and lower the seat into the locked position (Figure 13).
2. Attach the negative battery cable to the battery post.
3. Raise the hood until the prop rod can be raised above the frame tube, then lower the hood. Secure the hood latches.

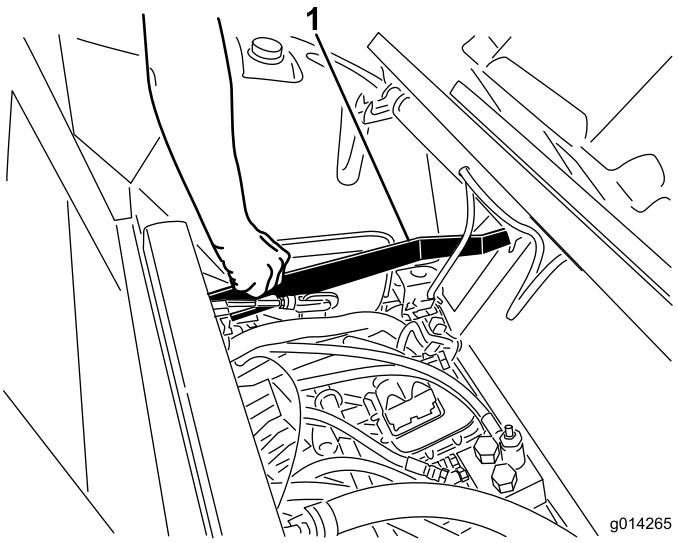

Figure 13

1. Seat latch release bar

Operation

The Road Light Kit consists of 2 front mounted head lamps, 2 combination warning/turn/tail lamps, a work light mounted to the ROPS structure (roll bar) and a horn.

Light Switches

Press the front of the light switch (Figure 14) to activate the front dipped beam head lights and the rear position lights.

Press the rear of the light switch (Figure 14) to activate the front dipped beam head lights, the rear position lights and the rear work light.

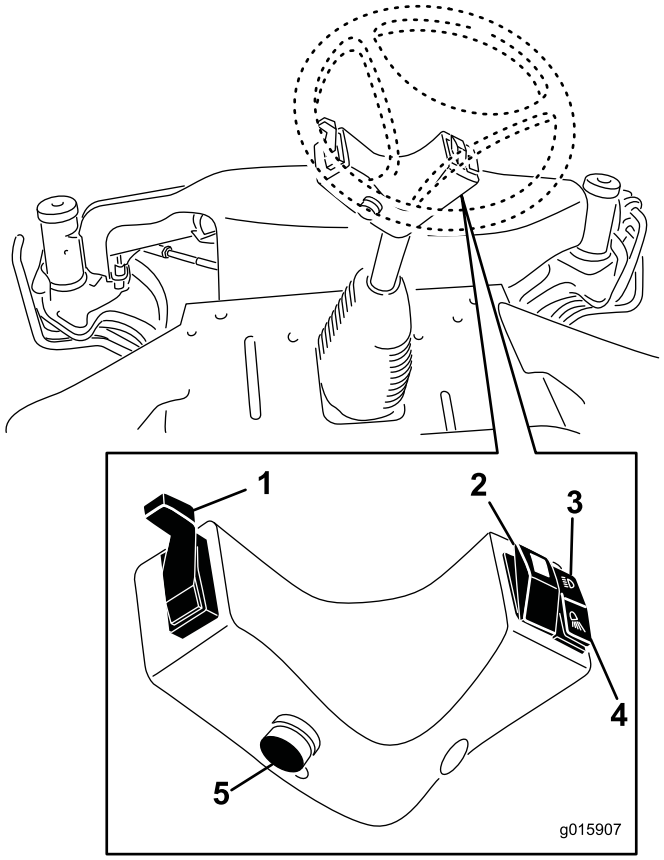

Figure 14

1. Turn signal arm
2. Hazard light switch
3. Dipped beam headlight switch
4. Work light switch
5. Horn button

Press the hazard light switch (Figure 14) to activate the front and rear flashing hazard lights.

Horn Button

Press the horn button to activate the horn (Figure 14) .

Turn Signal

Press down on the turn signal arm (Figure 14) to activate the left turn signal.

Press up on the turn signal arm (Figure 14) to activate the right turn signal.

Aiming the Headlights

Use the screws shown in Figure 15 to adjust the head lights per local standards.

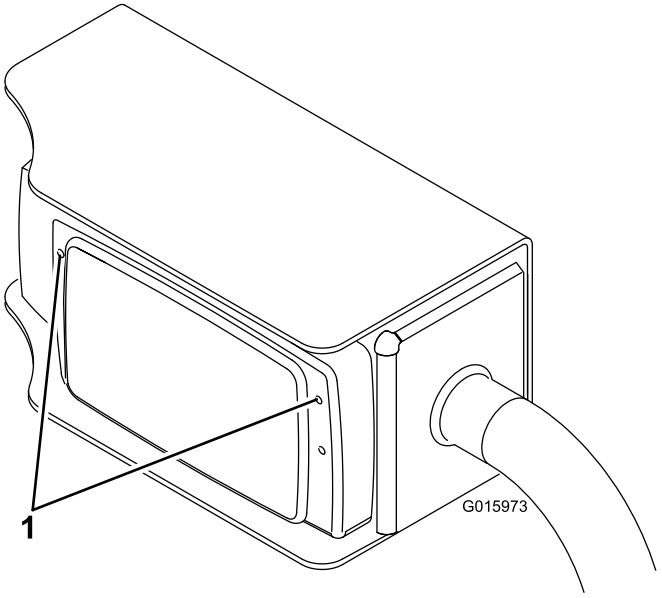

Figure 15

1. Adjusting screws