Form No. 3372-657 Rev B

LED Light Kit

2012 and Later Greensmaster® 800, 1000 and 1600 Mower

Model No. 04062

Installation Instructions

Loose Parts

Use the chart below to verify that all parts have been shipped.

Description	Qty.	Use
Wire harness	1	Installing the LED light kit.
LED light with mounting hardware (1 bolt, 1 washer, 1 nut)	2	
Spacer	4	
Flange nut	2	
Washer	2	
Right bar	1	
Left bar	1	
Switch	1	
Bolt (5/16 x 1 inch)	2	
Bolt (3/8 x 1–1/4 inch)	4	
Bolt (5/16 x 2–3/4 inch)	1	
Retainer spring	1	
Cable tie	6	

Note: Determine the left and right sides of the machine from the normal operating position.

1. Remove the spring retainer located near the kickstand.
2. Remove the 2 bolts (3/8 inch) connecting the right side plate to the rear cross member and spring bracket (Figure 2).

   Note: Work on only one side at a time. This will keep the rear cross member aligned on the machine.
3. Mount the right bar and previously removed spring bracket to the machine using 2 spacers and 2 bolts (3/8 x 1–1/4 inch) (Figure 2).
4. Remove the 2 bolts (3/8 inch) connecting the left side plate to the rear cross member (Figure 2).
5. Mount the left bar to the left side using 2 spacers and 2 bolts (3/8 x 1–1/4 inch).
6. Secure the two bars together using 2 bolts (5/16 x 1 inch), 2 washers, and 2 flange nuts through the holes corresponding to the appropriate model as shown in Figure 1.

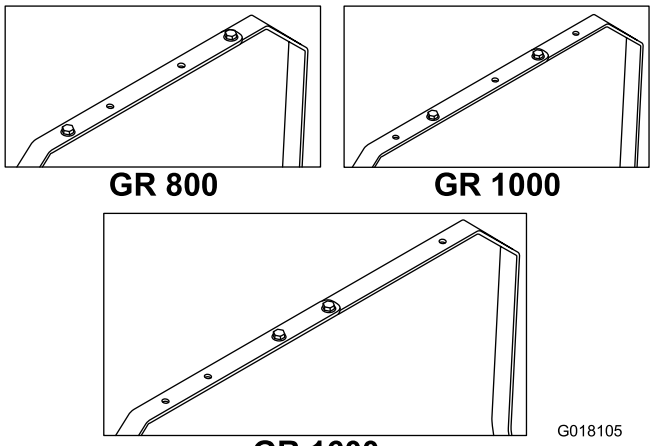

Figure 1

7. Mount the lights to the bar, and secure each one with the hardware attached to the lights (Figure 2).
8. Plug the wire harness into the lights (Figure 2), connecting the long end to the right light.
9. Remove the cavity plug and install the switch into the control panel, then plug the light wire harness into the switch (Figure 2).
10. Plug the wire harness power connector into the blue wires with female bullet connectors that come out of the engine blower housing (Figure 2).

© 2012—The Toro® Company
8111 Lyndale Avenue South
Bloomington, MN 55420

Register at www.Toro.com.

Original Instructions (EN)
Printed in the USA.
All Rights Reserved

3372-657 B

Note: Ensure that the wires leaving the connectors are not bent at a 90° angle.

11. Secure the wire harness with cable ties (Figure 2) and tuck the excess length under the control panel.

12. Remove the old spring retainer and install the new spring retainer with a bolt (5/16 x 2–3/4 inch) (Figure 2). Also install the previously removed spring.

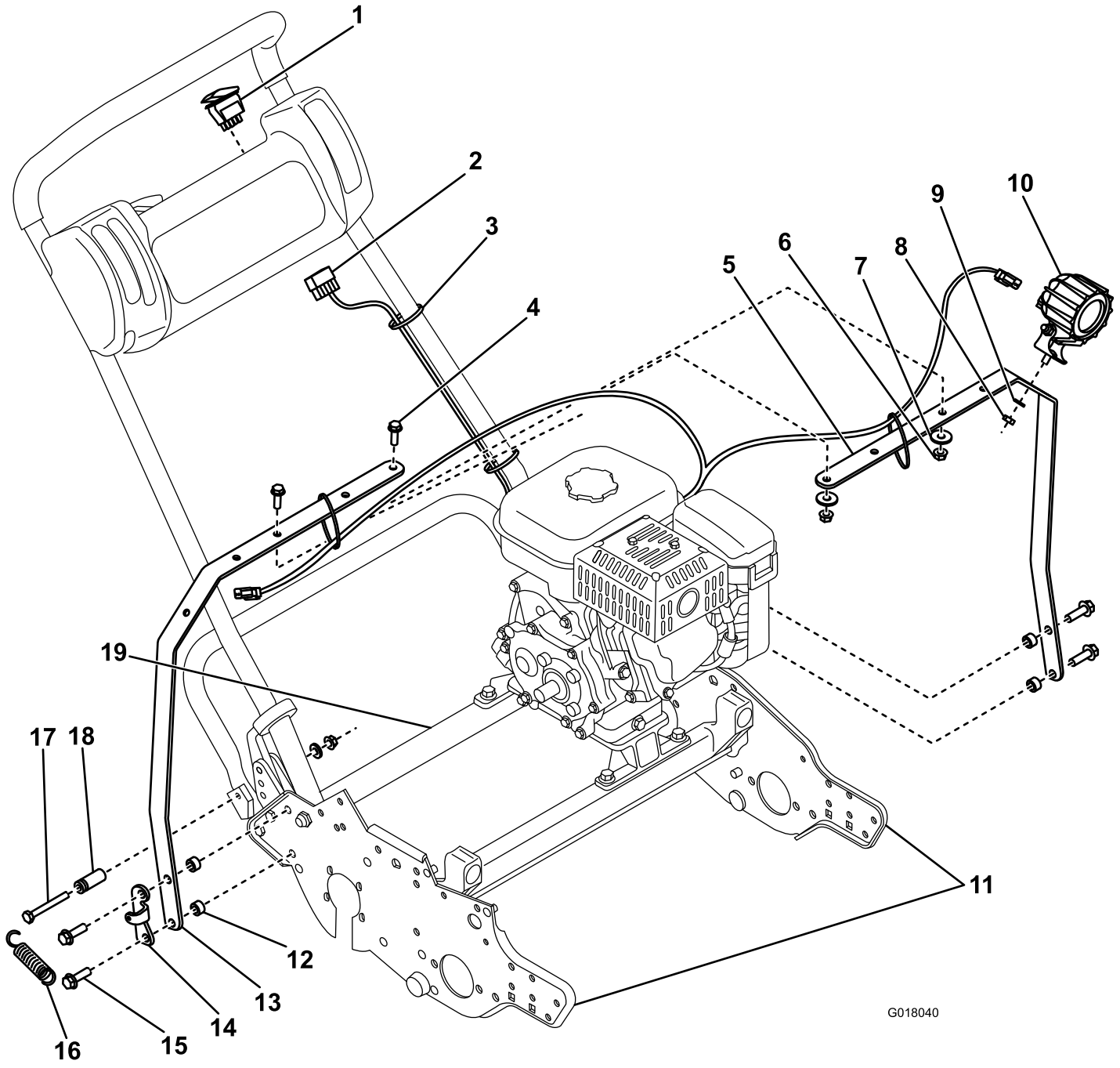

Figure 2

1. Switch
2. Wire harness
3. Zip tie
4. Bolt (5/16 x 1 inch)
5. Left bar
6. Flange nut
7. Washer
8. Hex nut
9. Lock washer
10. LED light
11. Side plates
12. Spacer
13. Right bar
14. Spring bracket
15. Bolt (3/8 x 1–1/4 inch)
16. Spring
17. Bolt (5/16 x 2–3/4 inch)
18. Spring retainer
19. Rear crossmember