Form No. 3373-632 Rev A

TORO®

Count on it.

Operator's Manual

Groundsmaster® 360 Multi-Purpose Machine

Model No. 30534—Serial No. 312000301 and Up

Model No. 30535—Serial No. 312000301 and Up

Model No. 30536—Serial No. 312000301 and Up

Model No. 30537—Serial No. 312000301 and Up

Model No. 30538—Serial No. 312000301 and Up

Model No. 30539—Serial No. 312000301 and Up

Model No. 30540—Serial No. 312000301 and Up

Model No. 30541—Serial No. 312000301 and Up

Model No. 30542—Serial No. 312000301 and Up

To register your product or download an *Operator's Manual* or *Parts Catalog* at no charge, go to www.Toro.com.

Original Instructions (EN)

Machines with model numbers 30535, 30536, 30538, 30540 and 30541 comply with all relevant European directives, for details please see the separate product specific Declaration of Conformity (DOC) sheet.

WARNING

CALIFORNIA
Proposition 65 Warning

Diesel engine exhaust and some of its constituents are known to the State of California to cause cancer, birth defects, and other reproductive harm.

Because in some areas there are local, state, or federal regulations requiring that a spark arrester be used on the engine of this machine, a spark arrester is available as an option. If you require a spark arrestor, contact your Authorized Toro Service Dealer.

Genuine Toro spark arresters are approved by the USDA Forestry Service.

Important: It is a violation of California Public Resource Code Section 4442 to use or operate the engine on any forest-covered, brush-covered, or grass-covered land without a spark arrester muffler maintained in working order, or the engine constricted, equipped, and maintained for the prevention of fire. Other states or federal areas may have similar laws.

Introduction

This machine is a ride-on, rotary-blade machine intended to be used by professional, hired operators in commercial applications. It is primarily designed for cutting grass on well-maintained lawns in parks, sports fields, and on commercial grounds. It is not designed for cutting brush, mowing grass and other growth alongside highways, or for agricultural uses.

Read this information carefully to learn how to operate and maintain your product properly and to avoid injury and product damage. You are responsible for operating the product properly and safely.

You may contact Toro directly at www.Toro.com for product and accessory information, help finding a dealer, or to register your product.

Whenever you need service, genuine Toro parts, or additional information, contact an Authorized Service Dealer or Toro Customer Service and have the model and serial numbers of your product ready. Figure 1 identifies the location of the model and serial numbers on the product. Write the numbers in the space provided.

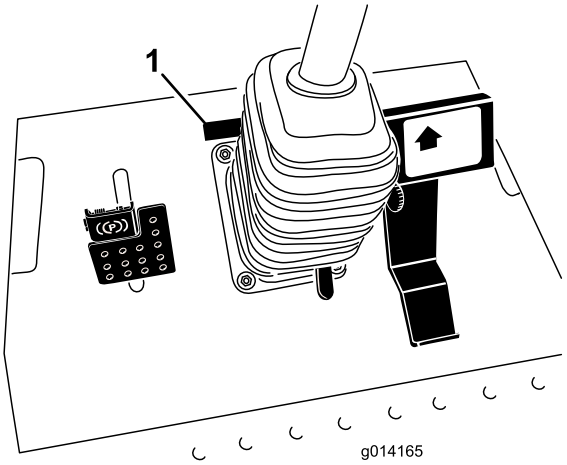

Figure 1

1. Model and serial number location

Model No. _____

Serial No. _____

This manual identifies potential hazards and has safety messages identified by the safety alert symbol (Figure 2), which signals a hazard that may cause serious injury or death if you do not follow the recommended precautions.



Figure 2

1. Safety alert symbol

This manual also uses 2 words to highlight information. **Important** calls attention to special mechanical information and **Note** emphasizes general information worthy of special attention.

© 2012—The Toro® Company
8111 Lyndale Avenue South
Bloomington, MN 55420

Contact us at www.Toro.com.
Printed in the USA.
All Rights Reserved

Contents

Introduction 2
Safety 4
- Safe Operating Practices 4
- Toro Riding Mower Safety 5
- Sound Power Level 6
- Sound Pressure Level 6
- Vibration Level 6
- Safety and Instructional Decals 7

Setup 15
- 1 Adjusting the ROPS 15
- 2 Checking the Tire Pressure 15
- 3 Checking the Fluid Levels 16

Product Overview 16
- Controls 16
- Specifications 19
- Attachments/Accessories 19

Operation 20
- Adding Fuel 20
- Filling the Fuel Tank 21
- Using the Rollover Protection System (ROPS) 21
- Think Safety First 22
- Starting and Stopping the Engine 22
- Driving the Machine 23
- Steering Selection (4 wheel drive models only) 24
- Stopping the Machine 24
- Operating the Mower 24
- Adjusting the Height-of-Cut 25
- Adjusting the Skid(s) 25
- Adjusting the Rear Anti-Scalp Rollers 26
- Adjusting the Rollers 26
- The Safety Interlock System 28
- Understanding the Diagnostic Light 29
- Diagnostic Ace Display 29
- Checking the Interlock Switches 30
- Positioning the Standard Seat 31
- Positioning the Deluxe Seat 32
- Raising/Lowering the Seat 33
- Pushing the Machine by Hand 34
- Loading Machines 34
- Transporting Machines 35
- Operating Tips 36

Maintenance 38
- Recommended Maintenance Schedule(s) 38
  - Daily Maintenance Checklist 39
- Premaintenance Procedures 40
  - Using the Hood Prop Rod 40
- Lubrication 41
  - Greasing the Bearings and Bushings 41
  - Servicing the Mower Deck Gear Box Lubricant 44
- Engine Maintenance 45
  - Servicing the Air Cleaner 45
  - Checking the Engine Oil Level 45
  - Changing the Engine Oil and Filter 46
  - Adjusting the Throttle 47
- Fuel System Maintenance 47
  - Servicing the Water Separator 47
  - Bleeding the Fuel System 48
  - Bleeding Air from the Fuel Injectors 48
  - Cleaning the Fuel Tank 48
  - Fuel Lines and Connections 49
- Electrical System Maintenance 49
  - Checking the Fuses 49
  - Servicing the Battery 50
  - Storing the Battery 50
- Drive System Maintenance 51
  - Checking the Tire Pressure 51
  - Correcting Steering Misalignment 51
- Cooling System Maintenance 51
  - Checking the Cooling System 51
  - Cleaning the Radiator 52
- Brake Maintenance 53
  - Adjusting the Service Brakes 53
  - Adjusting the Parking Brake 53
- Belt Maintenance 54
  - Checking the Alternator Belt 54
  - Replacing the Blade Drive Belts 54
- Controls System Maintenance 55
  - Adjusting the Traction Drive for Neutral 55
  - Adjusting the Maximum Ground Speed 55
  - Adjusting the Mow Speed Limiter Lever 56
- Hydraulic System Maintenance 57
  - Checking the Hydraulic System 57
  - Changing the Hydraulic Oil And Filter 57
- Mower Deck Maintenance 58
  - Servicing the Cutting Blades 58
  - Correcting Mower Deck Mismatch 61
  - Adjusting the Mower Deck Pitch 61
  - Replacing the Grass Deflector 62
- Cab Maintenance 63
  - Cleaning the Cab Air Filters 63
  - Cleaning the Air Conditioning Coil 63
  - Cleaning the A/C Condenser Screen 64
- Cleaning 64
  - Cleaning Under the Mower 64
  - Cleaning the Cab 64
  - Waste Disposal 64

Storage 65
- Engine 65
- Machine 65

Schematics 66

Safety

Machines with model numbers 30535, 30536, 30538, 30539, 30541 or 30542 meet or exceed CEN standard EN 836:1997 and ANSI B71.4-2004 specifications in effect at the time of production. Machines with model numbers 30534, 30537 and 30540 meet or exceed ANSI B71.4–2004 specifications in effect at the time of production.

Improper use or maintenance by the operator or owner can result in injury. To reduce the potential for injury, comply with these safety instructions and always pay attention to the safety alert symbol, which means **Caution, Warning, or Danger**—personal safety instruction. Failure to comply with the instruction may result in personal injury or death.

Safe Operating Practices

The following instructions are from the CEN standard EN 836:1997 and ANSI B71.4-2004.

This product is capable of amputating hands and feet and throwing objects. Always follow all safety instructions to avoid serious injury or death.

Training

- Read the *Operator's Manual* and other training material carefully. Be familiar with the controls, safety signs, and the proper use of the equipment.
- Never allow children or people unfamiliar with these instructions to use the lawn machine. Local regulations can restrict the age of the operator.
- Never mow while people, especially children, or pets are nearby.
- Keep in mind that the operator or user is responsible for accidents or hazards occurring to other people or their property.
- Do not carry passengers.
- All drivers should seek and obtain professional and practical instruction. Such instruction should emphasize:
  - the need for care and concentration when working with ride-on machines;
  - control of a ride-on machine sliding on a slope will not be regained by the application of the brake. The main reasons for loss of control are:
    - ◊ insufficient wheel grip, especially on wet grass;
    - ◊ being driven too fast;
    - ◊ inadequate braking;
    - ◊ the type of machine is unsuitable for its task;
    - ◊ lack of awareness of the effect of ground conditions, especially slopes;
    - ◊ incorrect load distribution.

Preparation

- While mowing, always wear substantial footwear and long trousers. Do not operate the equipment when barefoot or wearing open sandals.
- Thoroughly inspect the area where the equipment is to be used and remove all objects which may be thrown by the machine.
- **Warning**—fuel is highly flammable.
  - Store fuel in containers specifically designed for this purpose.
  - Refuel outdoors only and do not smoke while refueling.
  - Add fuel before starting the engine. Never remove the cap of the fuel tank or add fuel while the engine is running or when the engine is hot.
  - If fuel is spilled, do not attempt to start the engine but move the machine away from the area of spillage and avoid creating any source of ignition until fuel vapors have dissipated.
  - Replace all fuel tank and container caps securely.
- Replace faulty silencers/mufflers.
- Before using, always visually inspect to see that the blades, blade bolts and cutter assembly are not worn or damaged. Replace worn or damaged blades and bolts in sets to preserve balance.

Operation

- Be alert, slow down and use caution when making turns. Look behind and to the side before changing directions.
- Do not operate the engine in a confined space where dangerous carbon monoxide fumes can collect.
- Mow only in daylight or in good artificial light.
- Before attempting to start the engine, disengage all blade attachment clutches and shift into neutral.
- Remember there is no such thing as a safe slope. Travel on grass slopes requires particular care. To guard against overturning:
  - do not stop or start suddenly when on a slope;
  - use slow speeds on slopes and during tight turns;
  - stay alert for humps and hollows and other hidden hazards;
- Watch out for traffic when crossing or near roadways.

- Stop the blades from rotating before crossing surfaces other than grass.
- When using any attachments, never direct discharge of material toward bystanders nor allow anyone near the machine while in operation.
- Never operate the machine with damaged guards, shields, or without safety protective devices in place.
- Do not change the engine governor settings or overspeed the engine. Operating the engine at excessive speed may increase the hazard of personal injury.
- Before leaving the operator's position:
  - disengage the power take-off and lower the attachments;
  - set the parking brake;
  - stop the engine and remove the key.
- Disengage drive to attachments, stop the engine, and remove the ignition key:
  - before clearing blockages or unclogging chute;
  - before checking, cleaning or working on the machine;
  - after striking a foreign object. Inspect the machine for damage and make repairs before restarting and operating the equipment;
  - if the machine starts to vibrate abnormally (check immediately).
- Do not operate the machine under the influence of alcohol or drugs.
- Lightning can cause severe injury or death. If lightning is seen or thunder is heard in the area, do not operate the machine; seek shelter.
- Disengage drive to attachments when transporting or not in use.
- Stop the engine and disengage drive to attachment before refueling.

Maintenance and Storage

- Keep all nuts, bolts and screws tight to be sure the equipment is in safe working condition.
- Never store the equipment with fuel in the tank inside a building where fumes may reach an open flame or spark.
- Allow the engine to cool before storing in any enclosure.
- To reduce the fire hazard, keep the engine, silencer/muffler, battery compartment and fuel storage area free of grass, leaves, or excessive grease.
- Replace worn or damaged parts for safety.
- If the fuel tank has to be drained, do this outdoors.
- On multi-bladed machines, take care as manually rotating one blade can cause other blades to rotate.
- When machine is to be parked, stored or left unattended, lower the mower deck.

Toro Riding Mower Safety

The following list contains safety information specific to Toro products or other safety information that you must know that is not included in the CEN standard.

- Engine exhaust contains carbon monoxide, which is an odorless, deadly poison that can kill you. Do not run engine indoors or in an enclosed area.
- Keep hands, feet, hair and loose clothing away from attachment discharge area, underside of mower and any moving parts while engine is running.
- Do not touch equipment or attachment parts which may be hot from operation. Allow to cool before attempting to maintain, adjust, or service.
- Battery acid is poisonous and can cause burns. Avoid contact with skin, eyes and clothing. Protect your face, eyes, and clothing when working with a battery.
- This machine is not designed or equipped for on-road use and is a “slow-moving vehicle.” If you must cross or travel on a public road, you should be aware of and comply with local regulations, such as required lights, slow moving vehicle signs, and reflectors.
- Battery gases can explode. Keep cigarettes, sparks and flames away from battery.
- Use only genuine Toro replacement parts to ensure that original standards are maintained.
- Use only Toro approved attachments. Warranty may be voided if used with unapproved attachments.

Slope Operation

- Do not mow near drop-offs, ditches, steep banks or water. Wheels dropping over edges can cause rollovers, which may result in serious injury, death, or drowning.
- Do not mow slopes when grass is wet. Slippery conditions reduce traction and could cause sliding and loss of control.
- Do not make sudden turns or rapid speed changes.
- Use a walk behind mower and/or a hand trimmer near drop-offs, ditches, steep banks or water.
- Reduce speed and use extreme caution on slopes.
- Remove or mark obstacles such as rocks, tree limbs, etc. from the mowing area. Tall grass can hide obstacles.

- Watch for ditches, holes, rocks, dips, and rises that change the operating angle, as rough terrain could overturn the machine.
- Avoid sudden starts when mowing uphill because the machine may tip backwards.
- Be aware that loss of traction may occur going downhill. Weight transfer to the front wheels may cause drive wheels to slip and cause loss of braking and steering.
- Always avoid sudden starting or stopping on a slope. If tires lose traction, disengage the blades and proceed slowly off the slope.
- Follow the manufacturer's recommendations for wheel weights or counterweights to improve stability.
- Use extreme care with attachments. These can change the stability of the machine and cause loss of control.

Using the Rollover Protection System (ROPS)

- Keep the roll bar in the raised and locked position and use the seat belt when operating the machine.
- Be certain that the seat belt can be released quickly in the event of an emergency.
- Be aware there is no rollover protection when the roll bar is down.
- Check the area to be mowed and never fold the ROPS in areas where there are slopes, drop offs or water.
- Lower the rollbar only when absolutely necessary. **Do not wear the seat belt with the roll bar folded down.**
- Check carefully for overhead clearances (i.e. branches, doorways, electrical wires) before driving under any objects and do not contact them.

Sound Power Level

Note: The data contained in this section only pertains to units marked with the CE logo.

Model 30535, 30538 and 30541

These units have a guaranteed sound power level of 103 dBA, which includes an Uncertainty Value (K) of 1 dBA.

Sound power level was determined according to the procedures outlined in ISO 11094.

Model 30536, 30539 and 30542

These units have a guaranteed sound power level of 104 dBA, which includes an Uncertainty Value (K) of 1 dBA.

Sound power level was determined according to the procedures outlined in ISO 11094.

Sound Pressure Level

Note: The data contained in this section only pertains to units marked with the CE logo.

Model 30535 and 30538

These units have a sound pressure level at the operator's ear of 87 dBA, which includes an Uncertainty Value (K) of 1 dBA.

Sound pressure level was determined according to the procedures outlined in EN 836.

Model 30536 and 30539

These units have a sound pressure level at the operator's ear of 89 dBA, which includes an Uncertainty Value (K) of 1 dBA.

Sound pressure level was determined according to the procedures outlined in EN 836.

Model 30541

This unit has a sound pressure level at the operator's ear of 82 dBA, which includes an Uncertainty Value (K) of 1 dBA.

Sound pressure level was determined according to the procedures outlined in EN 836.

Model 30542

This unit has a sound pressure level at the operator's ear of 85 dBA, which includes an Uncertainty Value (K) of 1 dBA.

Sound pressure level was determined according to the procedures outlined in EN 836.

Vibration Level

Note: The data contained in this section only pertains to units marked with the CE logo.

Hand-Arm

Measured vibration level for right hand = 0.39 m/s^2

Measured vibration level for left hand = 0.34 m/s^2

Uncertainty Value (K) = 0.5 m/s^2

Measured values were determined according to the procedures outlined in EN 836.

Whole Body

Model 30536, 30538 and 30539

Measured vibration level = 0.54 m/s²

Uncertainty Value (K) = 0.5 m/s²

Model 30541 and 30542

Measured vibration level = 0.41 m/s²

Uncertainty Value (K) = 0.5 m/s²

Measured values were determined according to the procedures outlined in EN 836.

Safety and Instructional Decals

Safety decals and instructions are easily visible to the operator and are located near any area of potential danger. Replace any decal that is damaged or lost.

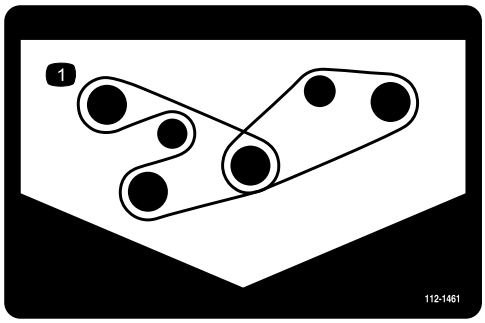

112-1461

1. Belt routing

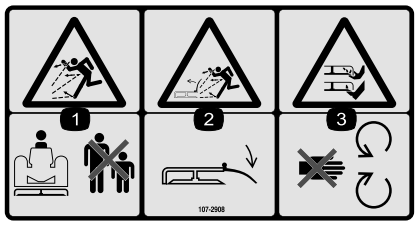

107-2908

CE models only

1. Thrown object hazard—keep bystanders a safe distance from the machine.
2. Thrown object hazard—do not operate the mower with the deflector up or removed, keep the deflector in place.
3. Cutting/dismemberment hazard of hand or foot, mower blade—stay away from moving parts.

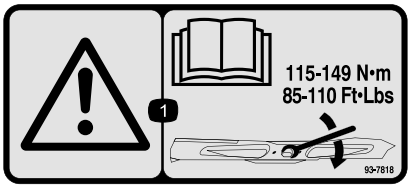

93-7818

1. Warning—read the *Operator's Manual* for instructions on torquing the blade bolt/nut to 115-149 N-m (85-110 ft-lb).

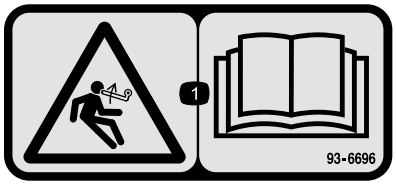

93–6696

1. Stored energy hazard—read the *Operator's Manual*.



93-6687

1. Do not step here.



93-6697

1. Read the *Operator's Manual*.
2. Add SAE 80w-90 (API GL-5) oil every 50 hours.

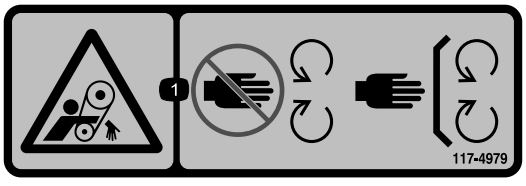

117–4979

1. Rotating belt — Keep guard in place



117-3276

1. Engine coolant under pressure
2. Explosion hazard—read the *Operator's Manual*.
3. Warning—do not touch the hot surface.
4. Warning—read the *Operator's Manual*.

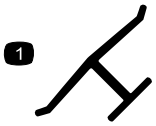

Manufacturer's Mark

1. Indicates the blade is identified as a part from the original machine manufacturer.



117-3272

1. Warning—read the *Operator's Manual*; failure to us the rollover protection system (ROPS) can result in injury in the event of a rollover; wear a seat belt when a ROPS is in place, do not wear a seat belt when ROPS is lowered.

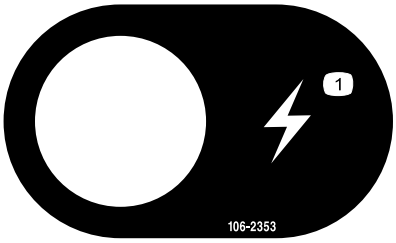

106-2353

1. Electrical power point

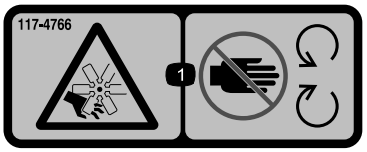

117-4766

1. Cutting/dismemberment hazard; fan—stay away from moving parts, keep all guards and shields in place.

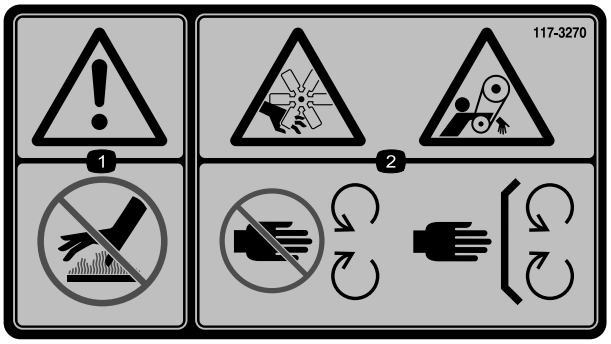

117-3270

1. Warning—do not touch the hot surface.
2. Cutting/dismemberment hazard, hand; entanglement hazard, belt—stay away from moving parts, keep all guards and shields in place.

CALIFORNIA SPARK ARRESTER WARNING

Operation of this equipment may create sparks that can start fires around dry vegetation. A spark arrester may be required. The operator should contact local fire agencies for laws or regulations relating to fire prevention requirements. 117-2718

117–2718

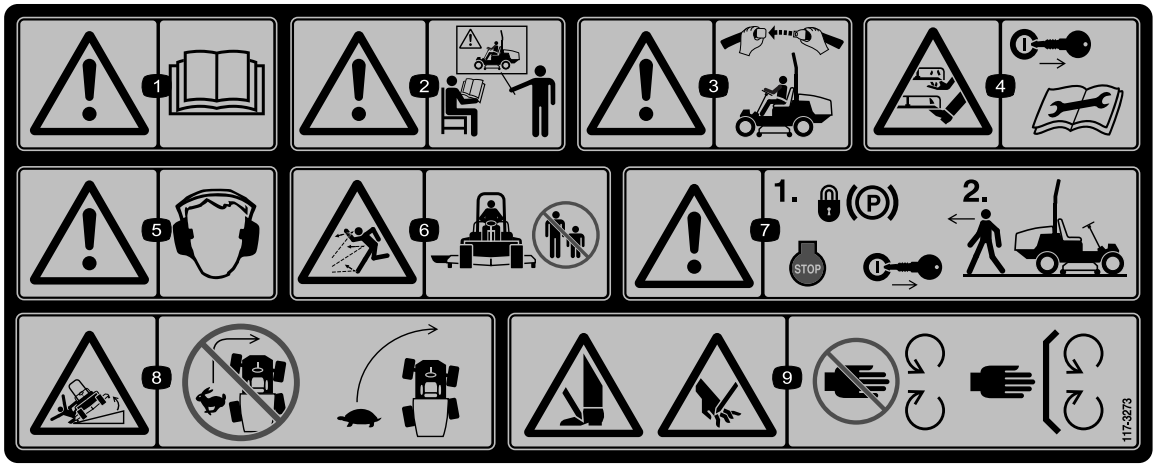

117-3273

1. Warning—read the *Operator's Manual*.
2. Warning—do not operate this machine unless you are trained.
3. Warning—wear the seat belt when seated in the operator's position.
4. Cutting/dismemberment hazard of hand or foot—remove the ignition key and read the instructions before servicing or performing maintenance.
5. Warning—wear hearing protection.
6. Thrown object hazard—keep bystanders a safe distance from the machine.
7. Warning—lock the parking brake, stop the engine and remove the ignition key before leaving the machine.
8. Tipping hazard—lower the cutting unit when driving down slopes; slow machine before turning, do not turn at high speeds
9. Cutting hazard of hand or foot—stay away from moving parts; keep all guards in place.

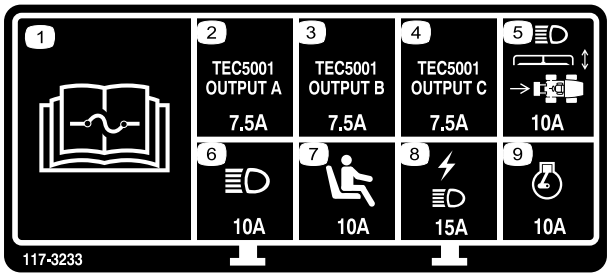

117-3233

4 Wheel drive models

1. Read the *Operator's Manual* for information on fuses.
2. 4 wheel steer solenoid—7.5 amp
3. PTO enable, 4 wheel steer lamp, deck lift, deck float—7.5 amp
4. Glow indicator, fuel run solenoid, diagnostic light, start—7.5 amp
5. Headlights, deck actuator, power take–off—10 amp
6. Lights—15 amp
7. Operator presence switch—10 amp
8. Power point, lights—15 amp
9. Engine—10 amp

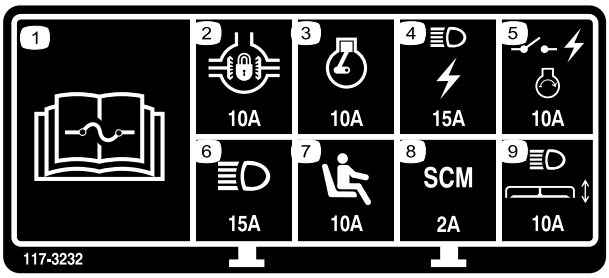

117-3232

2 Wheel drive models

1. Read the *Operator's Manual* for information on fuses.
2. Differential lockout—10 amp
3. Engine—10 amp
4. Lights, power point—15 amp
5. Power switch, engine ignition—10 amp
6. Lights—15 amp
7. Operator presence switch—10 amp
8. Computer—2 amp
9. Headlights, deck actuator—10 amp

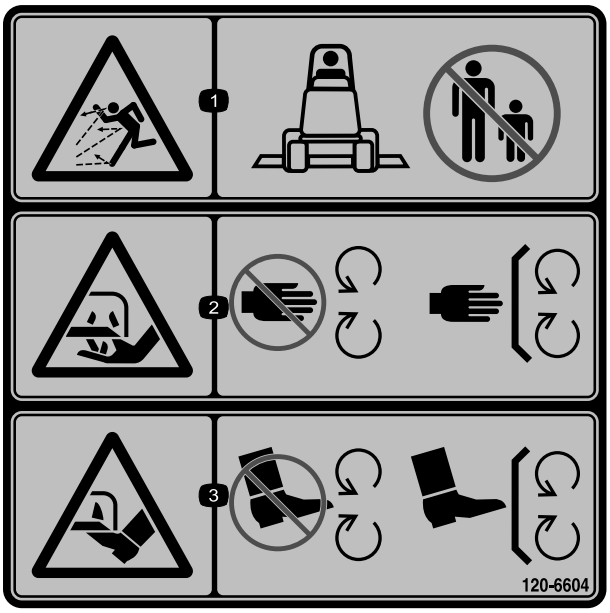

120-6604

1. Thrown object hazard—keep bystanders away from the machine.
2. Cutting/dismemberment hazard of hand, mower blade—stay away from moving parts, keep all guards and shields in place.
3. Cutting/dismemberment hazard of foot, mower blade—stay away from moving parts, keep all guards and shields in place.

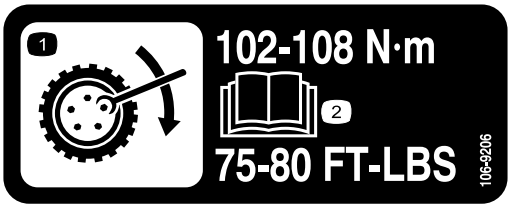

106-9206

1. Wheel torque specifications
2. Read the *Operator's Manual*.

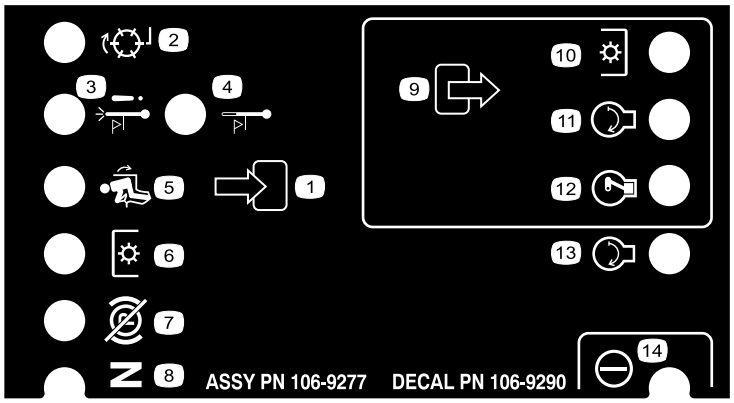

106-9290

Two wheel drive models only

1. Inputs
2. Not active
3. High temperature shutdown
4. High temperature warning
5. In seat
6. Power Take-off (PTO)
7. Parking brake Off
8. Neutral
9. Outputs
10. Power Take Off (PTO)
11. Start
12. Energize to Run (ETR)
13. Start
14. Power

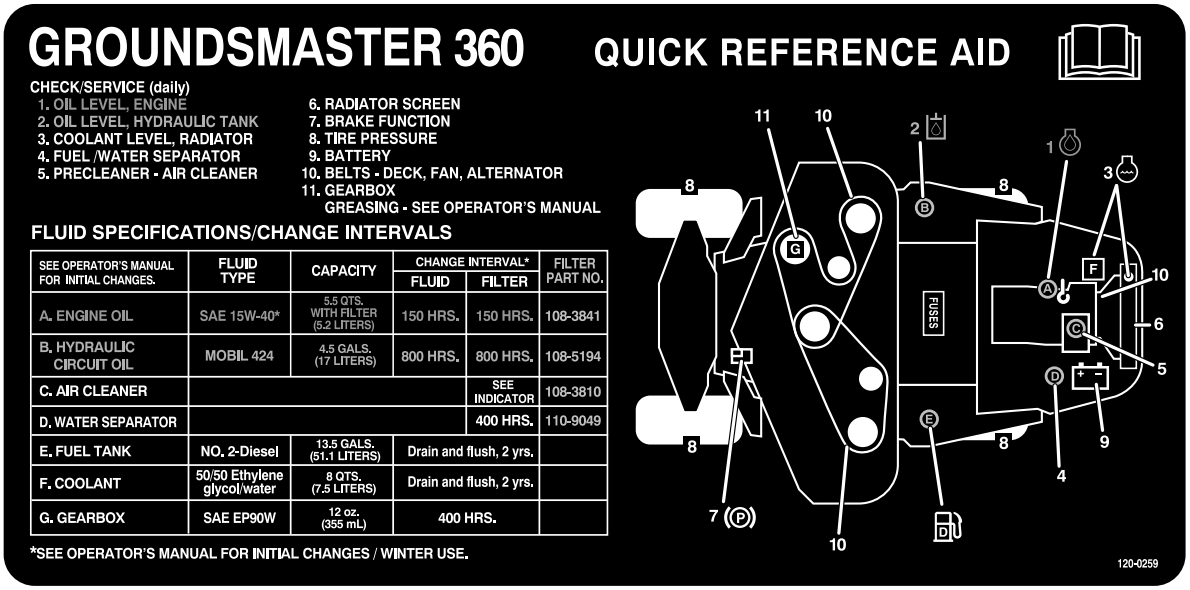

120-0259

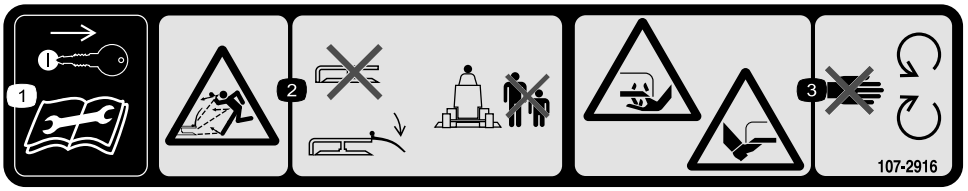

107-2916

1. Remove the ignition key and read the *Operator's Manual* before servicing or performing maintenance.
2. Thrown object hazard—do not operate the mower with the deflector up or removed, keep the deflector in place; keep bystanders a safe distance from the machine.
3. Cutting/dismemberment hazard of hand or foot, mower blade—stay away from moving parts.

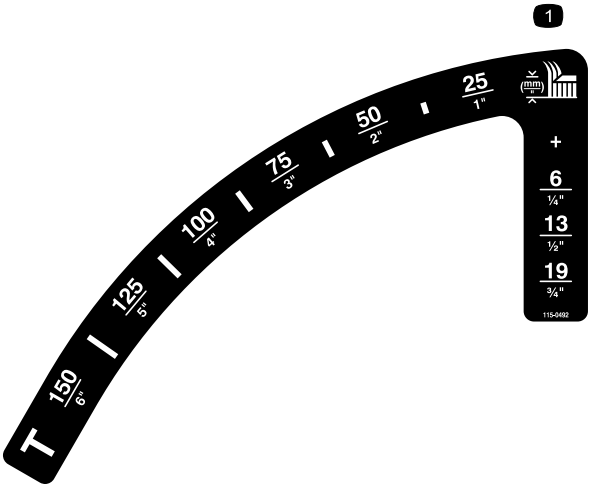

115-0492
Non-cab models

1. Height of cut (mm)

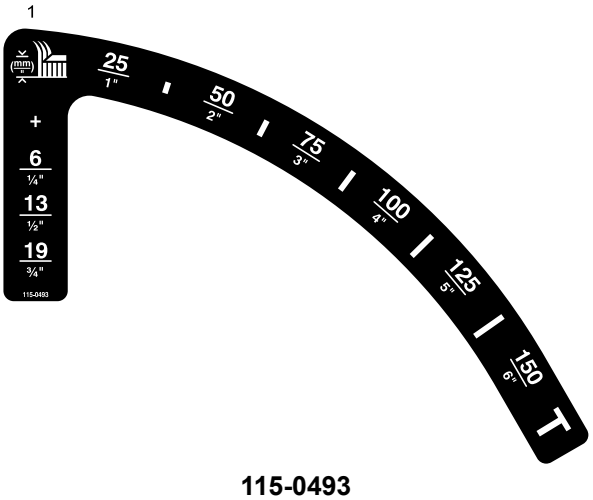

115-0493
Cab models

1. Height of cut (mm)

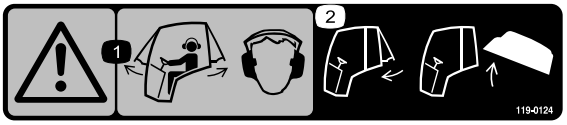

119–0124

(Cab models)

1. Warning—when the cab windows are open wear hearing protection.
2. Close the rear window before attempting to open the hood.

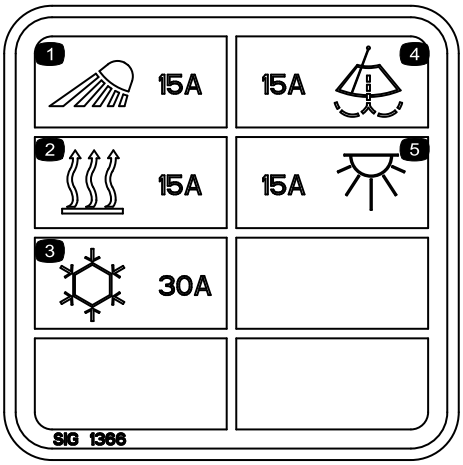

117–2787

(Cab models)

1. Headlights, 15A fuse
2. Heater, 15A fuse
3. Air conditioning, 30A fuse
4. Windshield wipers, 15A fuse
5. Dome light, 15A fuse

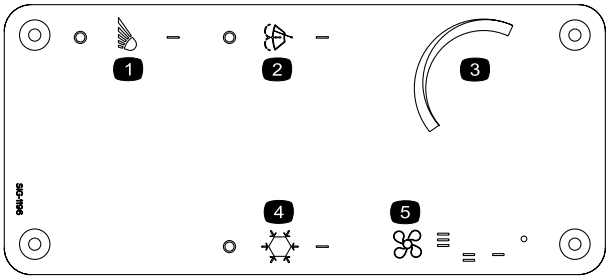

115–5501

(Cab Models)

1. Lights
2. Wind shield wiper switch
3. Temperature control
4. Air conditioning switch
5. Fan control



Battery Symbols

Some or all of these symbols are on your battery

1. Explosion hazard
2. No fire, open flame, or smoking.
3. Caustic liquid/chemical burn hazard
4. Wear eye protection
5. Read the *Operator's Manual.*
6. Keep bystanders a safe distance from the battery.
7. Wear eye protection; explosive gases can cause blindness and other injuries
8. Battery acid can cause blindness or severe burns.
9. Flush eyes immediately with water and get medical help fast.
10. Contains lead; do not discard.

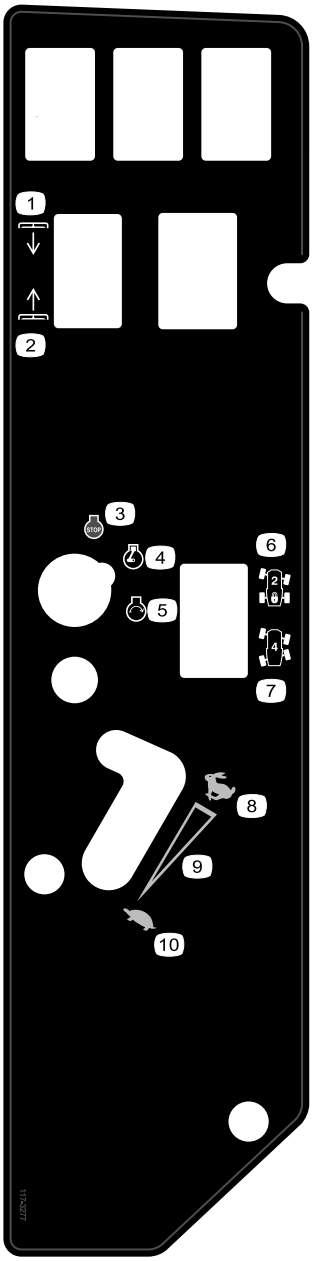

117-3277

Four wheel drive, non-cab models

1. Lower decks
2. Raise decks
3. Engine—stop
4. Engine—run
5. Engine—start
6. Two-wheel steering
7. Four-wheel steering
8. Fast
9. Continuous variable setting
10. Slow

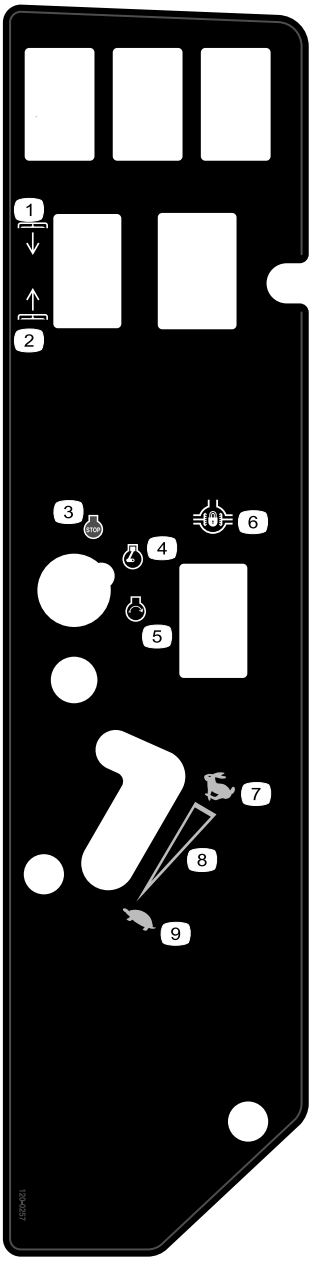

120-0257

Two wheels drive models

1. Lower decks
2. Raise decks
3. Engine—stop
4. Engine—run
5. Engine—start
6. Differential lock
7. Fast
8. Continuous variable setting
9. Slow

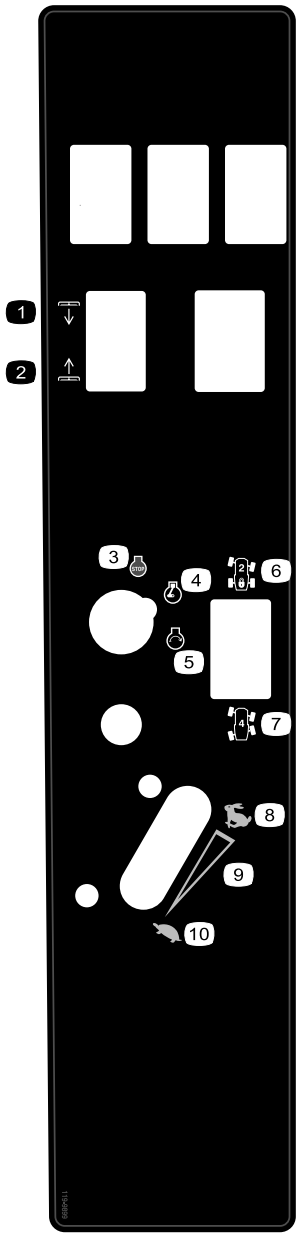

119-9899

Models with cabs only

1. Lower decks
2. Raise decks
3. Engine—stop
4. Engine—run
5. Engine—start
6. Two-wheel steering
7. Four-wheel steering
8. Fast
9. Continuous variable setting
10. Slow

Setup

Loose Parts

Use the chart below to verify that all parts have been shipped.

Procedure	Description	Qty.	Use
1	No parts required	–	Adjust the ROPS
2	No parts required	–	Check the tire pressure.
3	No parts required	–	Check the hydraulic fluid, engine oil, and coolant levels.

Media and Additional Parts

Description	Qty.	Use
Operator's Manual	1	Read before operating the machine
Engine Operator's Manual	1	Read before operating the machine
Parts Catalog	1	Use reference part numbers
Operator Training Material	1	View the video before operating the machine
Declaration of conformity	1	

1

Adjusting the ROPS

No Parts Required

Procedure

1. Remove the hairpin cotter pins and the pins from the roll bar (Figure 3).
2. Raise the roll bar to the upright position and install the two pins and secure them with the hairpin cotter pins (Figure 3).

   Note: If you must lower the roll bar, push the bar forward to relieve pressure on the pins, remove the pins, lower the bar slowly, and secure it with the pins so that it does not damage the hood.

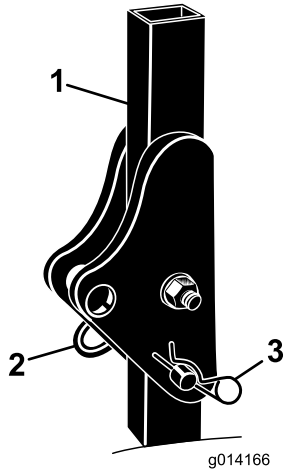

Figure 3

1. Roll bar
2. Pin
3. Hairpin cotter pin

2

Checking the Tire Pressure

No Parts Required

Procedure

The tires are over inflated for shipping. Therefore, release some of the air to reduce the pressure. The correct air pressure for non-cab models is 15 psi (103 kPa) in the front tires and 25 psi (172 kPa) in the rear tires. If a cab is installed on the machine, the front and rear tires should be inflated to 25 psi (172 kPa).

3

Checking the Fluid Levels

No Parts Required

Procedure

1. Check the hydraulic fluid level before starting the engine, refer to Checking the Hydraulic Fluid Level in the Maintenance Section.
2. Check the engine oil level before starting the engine, refer to Checking the Engine Oil Level in the Maintenance Section.
3. Check the cooling system before starting the engine; refer to Checking the Cooling System in the Maintenance Section.

Product Overview

Controls

Become familiar with all the controls before you start the engine and operate the machine.

Traction Pedal

The traction pedal (Figure 4) controls the forward and reverse operation. Press the top of the pedal to move forward and the bottom to move rearward. Ground speed depends on how far you press the pedal. For no load, maximum ground speed, fully press the pedal while the throttle is in the Fast position.

To stop, reduce foot pressure on the traction pedal and allow it to return to the center position.

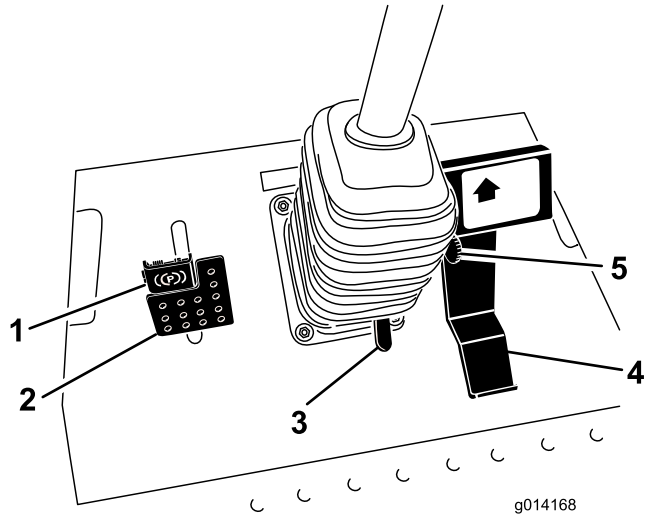

Figure 4

1. Parking brake
2. Brake pedal
3. Tilt steering pedal
4. Traction pedal
5. Mow speed limiter

Mow Speed Limiter

The mow speed limiter lever (Figure 4) can be flipped forward to limit the traction speed while operating.

Brake Pedal

The brake pedal is used in conjunction with the brake pedal latch to engage and disengage the parking brake (Figure 4) To stop the machine, release the traction pedal and allow it to return to the center position. The brake can assist in stopping in an emergency situation.

Parking Brake

To engage the parking brake, push down on the brake pedal and press the top forward to latch (Figure 4). To release the parking brake, press the brake pedal until the parking brake latch retracts.

Tilt Steering Pedal

To tilt the steering wheel towards you, press the foot pedal down, and pull the steering tower toward you to the most comfortable position and then release the pedal (Figure 4).

Ignition Switch

The ignition switch has three positions: Off, On/Preheat, and Start (Figure 5).

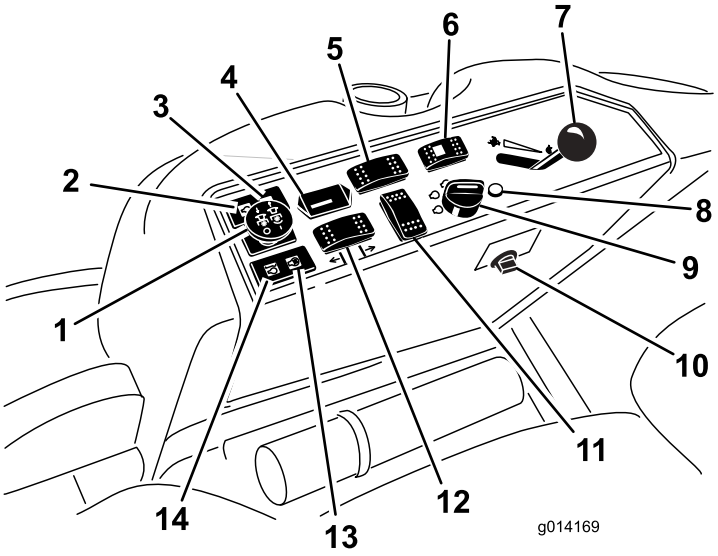

Figure 5

1. Power take off (PTO) Switch
2. Oil pressure warning light
3. Charge indicator light
4. Hour meter
5. Differential lock switch (2 wheel drive only)
6. Steering selector switch (4 wheel drive only)
7. Throttle lever
8. Diagnostic light (4 wheel drive only)
9. Ignition switch
10. Power point
11. Optional switch location
12. Deck lift switch
13. Glow plug light
14. Engine coolant temperature warning light

Diagnostic Light (4 wheel drive models only)

It will illuminate should a system fault be recognized (Figure 5).

Throttle Lever

The throttle lever (Figure 5) controls the speed of the engine. Moving the throttle lever forward toward the Fast position increases the engine speed. Moving it rearward toward the Slow position decreases the engine speed. The throttle controls the speed of the blades and, in conjunction with the traction pedal, controls ground speed of the machine. Always run the machine with the throttle in the Fast position when cutting grass.

Power Take Off (PTO) Switch

The power take off (PTO) switch starts and stops the mower blades (Figure 5).

Steering Selector Switch (4 wheel drive models only)

Press the steering selector switch to the rear to engage 4 wheel steering and forward to return to 2 wheel steering (Figure 5).

Hour Meter

The hour meter (Figure 5) records the number of hours the engine has operated. It operates when the key switch is in the Run position. Use these times for scheduling regular maintenance.

Differential Lock Switch (2 wheel drive models only)

Press the front of the switch and hold it down to engage the differential lock (Figure 5).

Glow Plug Light (Orange Light)

The glow plug indicator light (Figure 5) turns on when the ignition switch is turned to the On position. It remains lit for 6 seconds. When the light turns off, the engine is ready to be started.

Engine Coolant Temperature Warning Light

This light glows and the cutting blades stop if the engine coolant temperature is high (Figure 5). If the machine is not stopped and the coolant temperature rises another 20° F, the engine will stop.

Important: If the mower deck shuts down and the temperature warning light is on, push PTO knob down, drive to a safe flat area, move the throttle lever to the Slow position, allow the traction pedal to move to the neutral position, and engage the parking brake. Allow the engine to idle for several minutes while it cools to a safe level. Stop the engine and check the cooling system; refer to Checking the Cooling System.

Charge Indicator

Illuminates when the charging system circuit malfunctions (Figure 5).

Oil Pressure Warning Light

The oil pressure warning light (Figure 5) glows when the oil pressure in engine drops below a safe level. If low oil pressure ever occurs, stop the engine and determine the cause. Repair the damage before starting the engine again.

Fuel Gauge

The fuel gauge (Figure 6) indicates the fuel level remaining in the fuel tank.

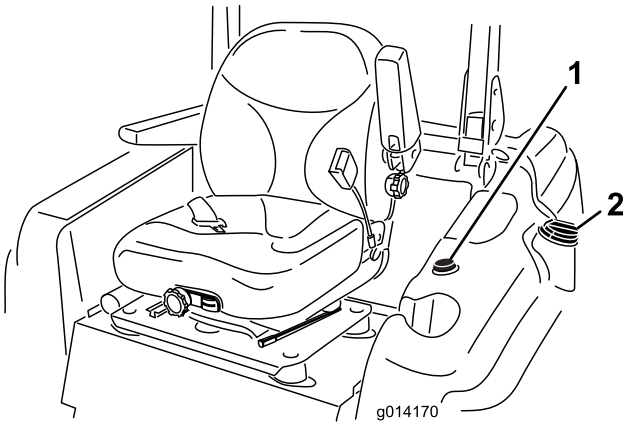

Figure 6

1. Fuel gauge
2. Fuel tank cap

Cab Controls

Models 30540, 30541 & 30542 only

Wind Shield Wiper/Washer Switch

Press the rear of the switch to activate the wind shield wipers (Figure 7) and the front of switch to activate the wind shield washer. Release the switch to turn off the washer.

Air Conditioning Switch

Press the front of the switch to activate the air conditioning (Figure 7) and the rear of the switch to turn off the air conditioning.

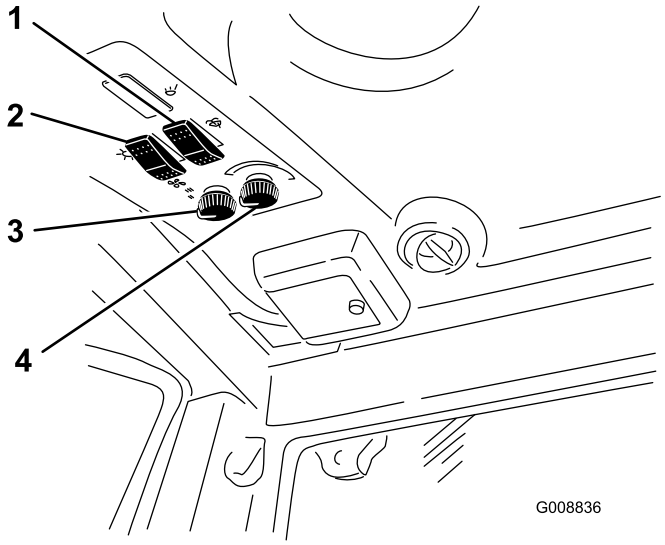

Figure 7

1. Wind shield wiper/washer switch
2. Air conditioning switch
3. Fan control
4. Temperature control

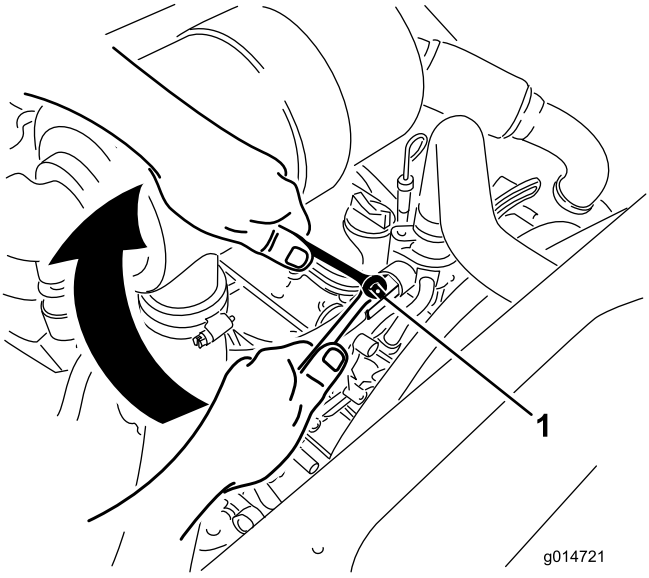

Figure 8

1. Heater shut-off valve

Fan Control

Rotate the fan control knob to regulate the speed of the fan (Figure 7).

Temperature Control

Rotate the temperature control knob to regulate the air temperature in the cab (Figure 7).

Heater Shut-off Valve

Closing the heater shut-off valve, located in engine compartment (Figure 8), will maximize the air conditioner capacity to the cab during the summer. During the fall conversion, fully open the valve.

Specifications

Note: Specifications and design are subject to change without notice.

Length	95 inches (241.3 cm)
Width (Rear Wheels)	78 inches (144.8 cm)
Height (with Roll Bar Up)	78 inches (144.8 cm)
Height (with Roll Bar Down)	54 inches (137.2 cm)
Height (with Cab)	86 inches (218.4 cm)
Weight, Model 30534, 30535 and 30536	2562 lb (1162 kg)
Weight, Model 30537, 30538 and 30539	2658 lb (1206 kg)
Weight, Model 30540, 30541 and 30542	3134 lb (1422 kg)

Attachments/Accessories

A selection of Toro approved attachments and accessories are available for use with the machine to enhance and expand its capabilities. Contact your Authorized Service Dealer or Distributor or go to www.Toro.com for a list of all approved attachments and accessories.

Operation

Note: Determine the left and right sides of the machine from the normal operating position.

⚠ CAUTION

This machine produces sound levels in excess of 85 dBA at the operators ear and can cause hearing loss through extended periods of exposure.

Wear hearing protection when operating this machine.

Adding Fuel

Use only clean, fresh diesel fuel or biodiesel fuels with low (<500 ppm) or ultra low (<15 ppm) sulfur content. The minimum cetane rating should be 40. Purchase fuel in quantities that can be used within 180 days to ensure fuel freshness.

Fuel tank capacity: 13.5 US gallons (51.1 l)

Use summer grade diesel fuel (No. 2-D) at temperatures above 20° F (-7° C) and winter grade (No. 1-D or No. 1-D/2-D blend) below that temperature. Use of winter grade fuel at lower temperatures provides lower flash point and cold flow characteristics which will ease starting and reduce fuel filter plugging.

Use of summer grade fuel above 20° F (-7° C) will contribute toward longer fuel pump life and increased power compared to winter grade fuel.

Important: Do not use kerosene or gasoline instead of diesel fuel. Failure to observe this caution will damage the engine.

⚠ WARNING

Fuel is harmful or fatal if swallowed. Long-term exposure to vapors can cause serious injury and illness.

- **Avoid prolonged breathing of vapors.**
- **Keep face away from nozzle and fuel tank or conditioner opening.**
- **Keep fuel away from eyes and skin.**

Biodiesel Ready

This machine can also use a biodiesel blended fuel of up to B20 (20% biodiesel, 80% petrodiesel). The petrodiesel portion should be low or ultra low sulfur. Observe the following precautions:

- The biodiesel portion of the fuel must meet specification ASTM D6751 or EN14214.
- The blended fuel composition should meet ASTM D975 or EN590.
- Painted surfaces may be damaged by biodiesel blends.
- Use B5 (biodiesel content of 5%) or lesser blends in cold weather.
- Monitor seals, hoses, gaskets in contact with fuel as they may be degraded over time.
- Fuel filter plugging may be expected for a time after converting to biodiesel blended.
- Contact your distributor if you wish for more information on biodiesel.

⚠ DANGER

In certain conditions, fuel is extremely flammable and highly explosive. A fire or explosion from fuel can burn you and others and can damage property.

- **Fill the fuel tank outdoors, in an open area, when the engine is cold. Wipe up any fuel that spills.**
- **Never fill the fuel tank inside an enclosed trailer.**
- **Never smoke when handling fuel, and stay away from an open flame or where fuel fumes may be ignited by a spark.**
- **Store fuel in an approved container and keep it out of the reach of children. Never buy more than a 30-day supply of fuel.**
- **Do not operate without entire exhaust system in place and in proper working condition.**

⚠ DANGER

In certain conditions during fueling, static electricity can be released causing a spark which can ignite the fuel vapors. A fire or explosion from fuel can burn you and others and can damage property.

- **Always place fuel containers on the ground away from your vehicle before filling.**
- **Do not fill fuel containers inside a vehicle or on a truck or trailer bed because interior carpets or plastic truck bed liners may insulate the container and slow the loss of any static charge.**
- **When practical, remove equipment from the truck or trailer and refuel the equipment with its wheels on the ground.**
- **If this is not possible, then refuel such equipment on a truck or trailer from a portable container, rather than from a fuel dispenser nozzle.**
- **If a fuel dispenser nozzle must be used, keep the nozzle in contact with the rim of the fuel tank or container opening at all times until fueling is complete.**

Filling the Fuel Tank

1. Park the machine on a level surface.
2. Shut the engine off and set the parking brake.
3. Clean around the fuel tank cap and remove the cap (Figure 9).

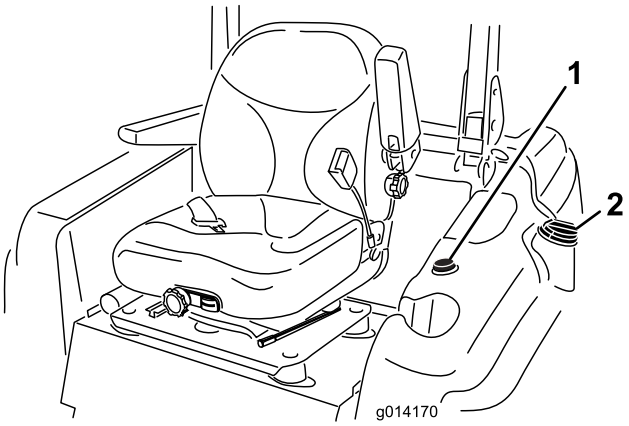

Figure 9

1. Fuel gauge
2. Fuel tank cap

Important: **Do not open the fuel tank when parked on a hill. The fuel could spill out.**

4. Add fuel to the fuel tank, until the level is even with the bottom of the filler neck. **Do not over fill the fuel tank.**
5. Install the fuel tank cap and secure. Wipe up any fuel that may have spilled.

Note: If possible, fill the fuel tank after each use. This will minimize possible buildup of condensation inside the fuel tank.

Using the Rollover Protection System (ROPS)

- Keep the roll bar in the raised and locked position and use the seat belt when operating the machine.
- Be certain that the seat belt can be released quickly in the event of an emergency.
- Be aware there is no rollover protection when the roll bar is down.
- Check the area to be mowed and never fold the ROPS in areas where there are slopes, drop offs or water.
- Lower the rollbar only when absolutely necessary. **Do not wear the seat belt with the roll bar folded down.**
- Check carefully for overhead clearances (i.e. branches, doorways, electrical wires) before driving under any objects and do not contact them.

⚠ WARNING

To avoid injury or death from rollover: keep the roll bar in the raised locked position and use the seat belt.

Ensure that the seat plate is secured with the seat latch.

⚠ WARNING

There is no rollover protection when the roll bar is in the down position.

- **Lower the roll bar only when absolutely necessary.**
- **Do not wear the seat belt when the roll bar is in the down position.**
- **Drive slowly and carefully.**
- **Raise the roll bar as soon as clearance permits.**
- **Check carefully for overhead clearances (i.e. branches, doorways, electrical wires) before driving under any objects and do not contact them.**

1. To lower the roll bar, remove the hairpin cotters, push the roll bar forward against the springs, and remove the two pins (Figure 10).

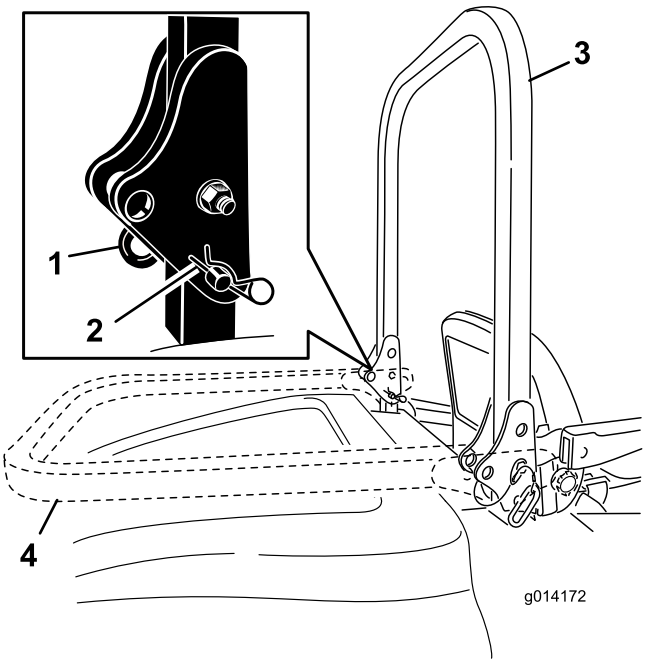

Figure 10

1. Pin
2. Hairpin cotter
3. Roll bar, raised position
4. Roll bar, lowered position

2. Lower the roll bar to the down position (Figure 10).
3. Install the two pins and secure them with the hairpin cotter pins (Figure 10).

   Important: Ensure that the seat is secured with the seat latch.
4. To raise the roll bar, remove the hairpin cotter pins and remove the two pins (Figure 10).
5. Raise the roll bar to the upright position and install the two pins and secure them with the hairpin cotter pins (Figure 10).

Important: Always use the seat belt when the roll bar is in the raised and locked position. Do not use the seat belt when the roll bar is in the lowered position.

Think Safety First

Please read all safety instructions and symbols in the safety section. Knowing this information could help you or bystanders avoid injury.

⚠ DANGER

Operating on wet grass or steep slopes can cause sliding and loss of control.

Wheels dropping over edges can cause rollovers, which may result in serious injury, death or drowning.

There is no rollover protection when the roll bar is down.

Always keep the roll bar in the raised and locked position and use the seat belt.

Read and follow the rollover protection instructions and warnings.

To avoid loss of control and possibility of rollover:

- **Do not operate near drop-offs or near water.**
- **Reduce speed and use extreme caution on slopes.**
- **Avoid sudden turns or rapid speed changes.**

⚠ CAUTION

This machine produces sound levels in excess of 85 dBA at the operators ear and can cause hearing loss through extended periods of exposure.

Wear hearing protection when operating this machine.

Starting and Stopping the Engine

Starting the Engine

1. Raise the roll bar up and lock it into place, sit on the seat, and fasten the seat belt.
2. Make sure the traction pedal is in the neutral position.
3. Set the parking brake.
4. Move the PTO (power take off) switch to the off position (Figure 11).

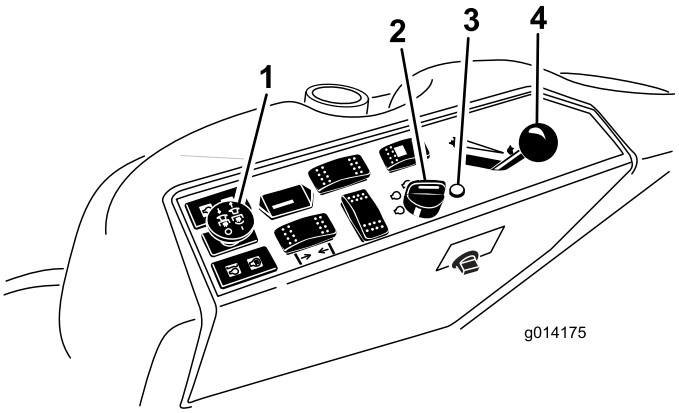

Figure 11

1. Power take off switch (PTO)
2. Ignition switch
3. Glow plug light
4. Throttle lever

5. Move the throttle lever midway between the Fast and Slow positions (Figure 11).
6. Turn the ignition key clockwise to the Run position (Figure 12).

   The glow plug light will turn on for 6 seconds.

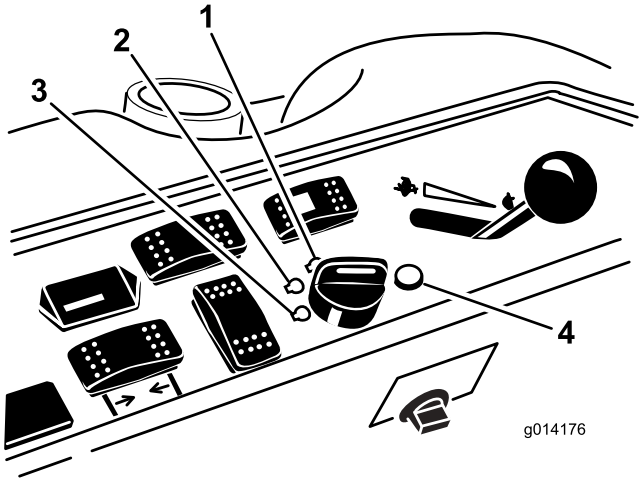

Figure 12

1. Start
2. Run/glow plug
3. Off
4. Glow plug indicator light

7. After the glow plug indicator light goes out, turn the key to the Start position. When the engine starts release the key.

   Important: Use starting cycles of no more than 15 seconds per minute to avoid overheating the starter motor.

   Note: Additional starting cycles may be required when starting the engine for the first time after the fuel system has been completely drained.
8. Leave the throttle midway between the Slow and Fast positions until the engine and hydraulic system warm up.

   Important: When engine is started for the first time, or after an engine oil change, or an overhaul of the engine, transmission, or wheel motor, operate the machine with the throttle lever in the Slow position in both the forward and reverse directions for one to two minutes. Also operate the lift lever and PTO lever to ensure proper operation of all parts. Then shut the engine off and check fluid levels, check for oil leaks, loose parts, and any other noticeable malfunctions.

⚠ CAUTION

Shut the engine off and wait for all moving parts to stop before checking for oil leaks, loose parts, or other malfunctions.

Stopping the Engine

1. Disengage the PTO, make sure the traction pedal is in the neutral position, set the parking brake, and move the throttle lever to the Slow position.
2. Let the engine idle for 60 seconds.
3. Turn the ignition key to the Off position (Figure 12). Wait for all moving parts to stop before leaving the operating position.
4. Remove the key before transporting or storing machine.

   Important: Make sure to remove the key as the fuel pump or accessories may run and cause the battery to lose charge.

⚠ CAUTION

Children or bystanders may be injured if they move or attempt to operate the tractor while it is unattended.

Always remove the ignition key and set the parking brake when leaving the machine unattended, even if just for a few minutes.

Driving the Machine

The throttle control regulates the engine speed as measured in rpm (revolutions per minute). Place the throttle control in the Fast position for best

performance. Always operate in the Fast throttle position when mowing.

Steering Selection (4 wheel drive models only)

For maximum trimming and minimum turf damage the machine should always be operated in 4 wheel steering. However, when it is desired to transport the machine on roads or trails, the machine can be switched into 2 wheel steering.

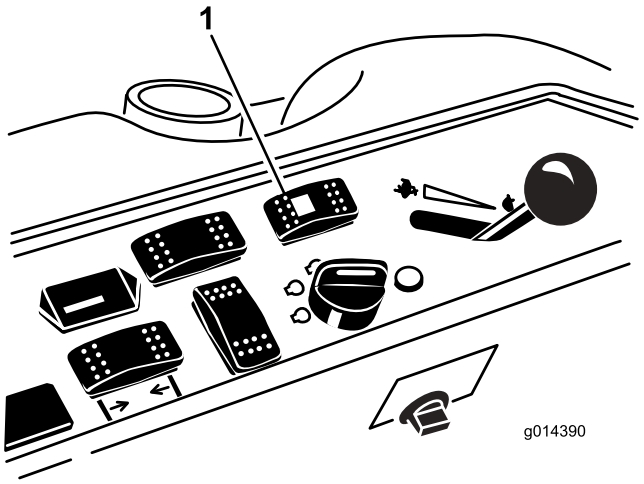

Figure 13

1. Steering selector switch

Switching from 4 wheel steering to 2 wheel steering

Press the steering selector switch (Figure 13) to the forward position. If the wheels are not aligned in the forward position, the green light will flash and the machine will remain in 4 wheel steering until the four tires are directed straight ahead. The operator should turn the steering wheel slowly to straighten out the wheels until the green light ceases to flash and remains ON. When the switch light is solid green, the machine is in 2 wheel steering.

Note: If the steering wheel is turned too briskly, steering misalignment may occur.

Switching from 2 wheel steering to 4 wheel steering

Press the steering selector switch (Figure 13) to the rearward position. If the front wheels are not aligned in the forward position, the green light will flash and the machine will remain in 2 wheel steering until the four tires are directed straight ahead. The operator should turn the steering wheel slowly to straighten out the wheels until the green light ceases to flash and remains OFF. If the steering wheel is turned too briskly, steering misalignment may occur. When the switch light is continuously OFF, the machine is in 4 wheel steering.

Note: If the steering system is misaligned after repeated 2 wheel steering to 4 wheel steering engagements, refer to Correcting Steering Misalignment in the Maintenance Section.

Stopping the Machine

To stop the machine, release the traction pedal to the neutral position.

Set the parking brake whenever you leave the machine. Remember to remove the key from the ignition switch.

⚠ CAUTION

Children or bystanders may be injured if they attempt to move or operate the tractor while it is unattended.

Always remove the ignition key and set the parking brake when leaving the machine unattended, even if just for a few minutes.

Operating the Mower

Raising and Lowering the Mower

The deck lift switch raises and lowers the mower deck (Figure 14). The engine must be running for you to use this switch.

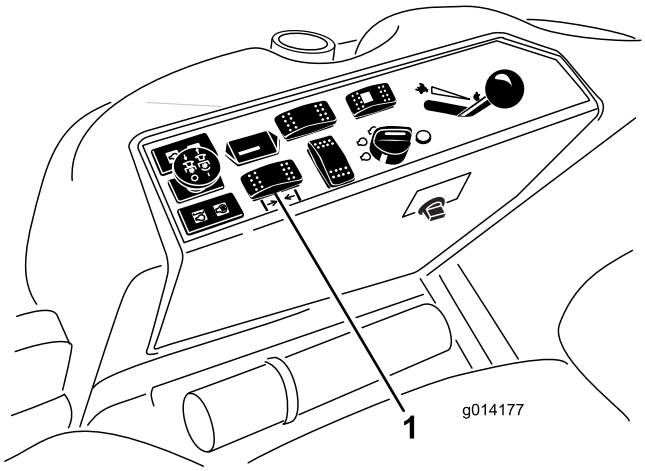

Figure 14

1. Deck lift switch

- To lower the mower deck, push the switch forward.
- To raise the mover deck, push the switch rearward.

Important: Do not continue to hold the switch back after the mower has fully raised. Doing so will damage the hydraulic system.

Note: To lock the mower deck in a raised position, raise the deck past the 6 inch (15 cm) position, remove the height of cut stop pin (refer to Adjusting the Height-of-Cut), and place the pin in the 6 inch (15 cm) height-of-cut position (Figure 16).

Engaging the Power Take Off (PTO)

The power take off (PTO) switch starts and stops the mower blades and some powered attachments.

1. If the engine is cold, allow the engine to warm up 5 to 10 minutes before engaging the PTO.
2. While seated in the seat, make sure the traction pedal is in the neutral position and the engine is at full throttle.
3. Pull up on the PTO switch to engage it (Figure 15).

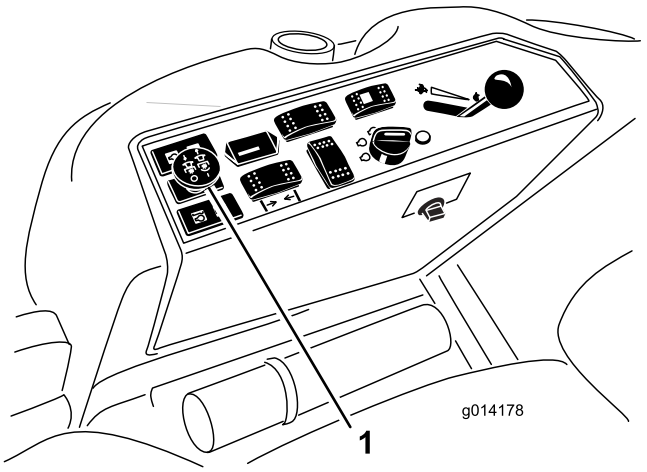

Figure 15

1. PTO switch

Disengaging the PTO

To disengage, push the PTO switch to the off position.

Adjusting the Height-of-Cut

The height-of-cut is adjusted from 1 to 6 inches (2.5 to 15.8 cm) in 1/4 inch (6 mm) increments by relocating the stop pin into different hole locations.

1. With the engine running, push back on the deck lift switch until the mower deck is fully raised and **release the switch immediately** (Figure 16).
2. To adjust, rotate the stop pin until the nub on it lines up with the slots in the holes in the height-of-cut bracket and remove it (Figure 16).
3. Select a hole in the height-of-cut bracket corresponding to the height-of-cut desired, insert the pin, and rotate it down to lock it in place (Figure 16).

   Note: There are four rows of hole positions (Figure 16). The top row gives you the height of cut listed above the pin. The second row down gives you the height listed plus 1/4 inch (6 mm). The third row down gives you the height listed plus 1/2 inch (12 mm). The bottom row gives you the height listed plus 3/4 inch (18 mm). For the 6 inch (15.8 cm) position there is only one hole, located in the second row. This does not add 1/4 inch (6 mm) to the 6 inch (15.8 cm) position.

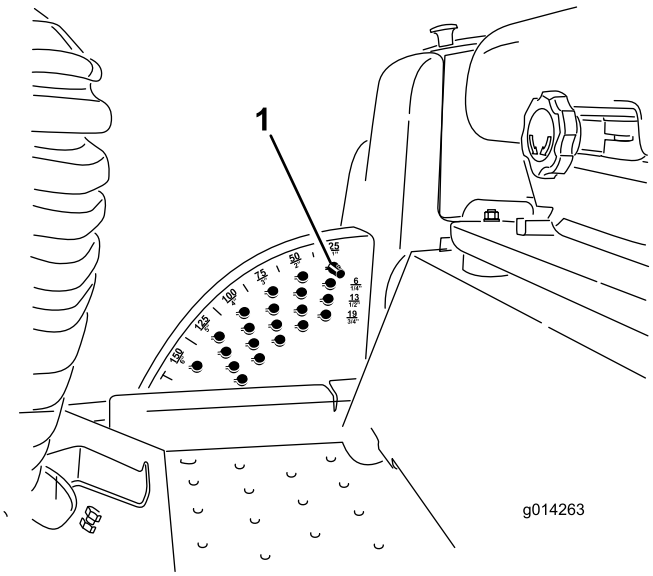

Figure 16

1. Stop pin

4. Adjust the anti-scalp rollers and skids as required.

Adjusting the Skid(s)

Mount the skids in the lower position when operating in height of cuts higher than 2-1/2 inches (64 mm) and in the higher position when operating in height of cuts lower than 2-1/2 inches (64 mm).

Note: On Guardian® mowers, when the skids become worn, you can switch the skid to the opposite sides of the mower, flipping them over. This will allow you to use the skids longer before replacing them.

1. Disengage the PTO and set the parking brake.

2. Move the throttle lever to the Slow position, stop the engine, remove the key, and wait for all moving parts to stop before leaving the operating position.
3. Loosen the screw at the front of each skid (2 skids on Guardian decks and 1 skid on side-discharge decks).

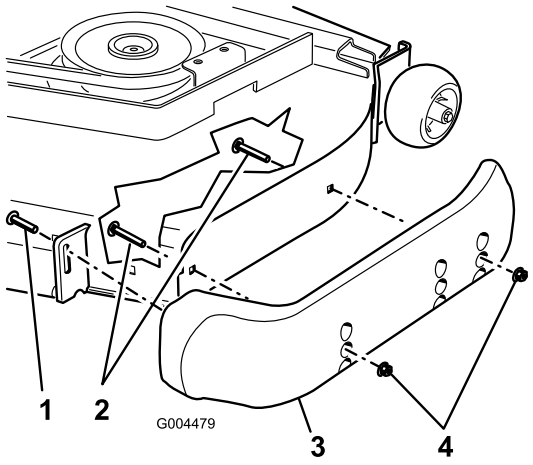

Figure 17

1. Screw
2. Flange-head bolt
3. Skid
4. Nut

4. Remove the flange-head bolts and nuts from each skid.
5. Move each skid to the desired position and secure them with the flange-head bolts and nuts.

   Note: Only use the top or center sets of holes to adjust the skids. The bottom holes are used when switching sides on a Guardian mower deck, at which time they become the top holes on the other side of the mower.
6. Torque the screw at the front of each skid to 80 to 100 in-lb (9 to 11 N-m).

Adjusting the Rear Anti-Scalp Rollers

Whenever you change the height-of-cut, adjust the height of the rear anti-scalp rollers.

1. Disengage the PTO, release the traction pedal, and set the parking brake.
2. Move the throttle lever to the Slow position, stop the engine, remove the key, and wait for all moving parts to stop before leaving the operating position.
3. After adjusting the height-of-cut, adjust the rollers by removing the flange nut, bushing, spacer, and bolt (Figure 18).

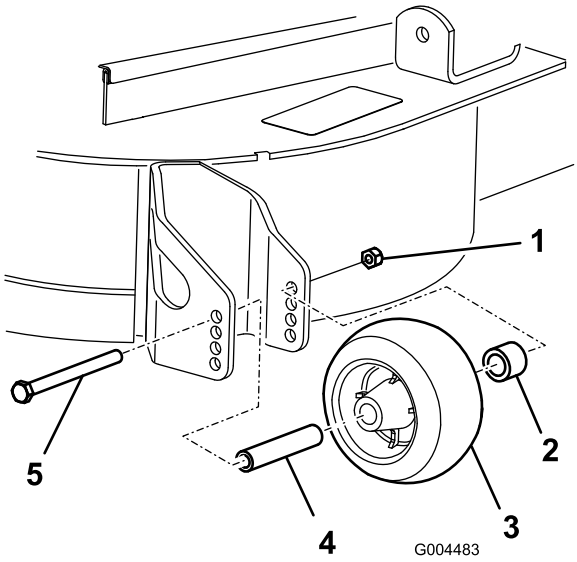

Figure 18

1. Flange nut
2. Bushing
3. Anti-scalp roller
4. Spacer
5. Bolt

4. Select a hole so the anti-scalp roller is positioned to the nearest corresponding height-of-cut desired (Figure 19).

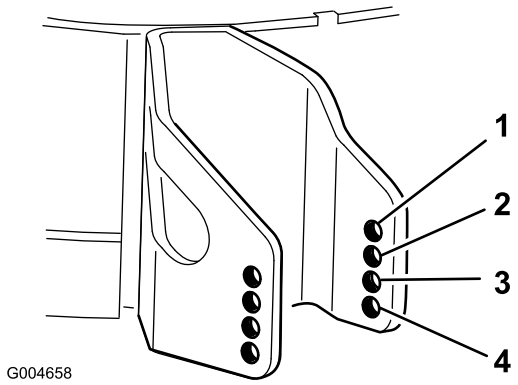

Figure 19

1. 1-1/2 inches (38 mm)
2. 2 inches (51 mm)
3. 2-1/2 inches (63 mm)
4. 3 inches (76 mm) and higher

5. Install the flange nut bushing, spacer, and bolt. Torque to 40-45 ft-lb (54-61 N·m) (Figure 18).

Adjusting the Rollers

Mount the rollers in the lower position when operating in height of cuts higher than 2-1/2 inches (64 mm) and in the higher position when operating in height of cuts lower than 2-1/2 inches (64 mm).

1. Disengage the PTO, release the traction pedal and set the parking brake.

2. Move the throttle lever to the Slow position, stop the engine, remove the key, and wait for all moving parts to stop before leaving the operating position.
3. Raise the front of the machine and support it on jack stands.
4. Remove the fasteners securing each roller on your mower deck and move the rollers up or down as desired; refer to Figure 20 through Figure 24 as applicable for your mower.

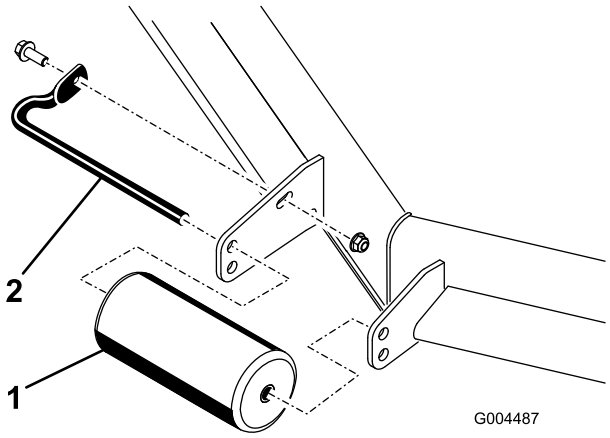

Figure 20
All Mower Decks

1. Front roller
2. Roller shaft

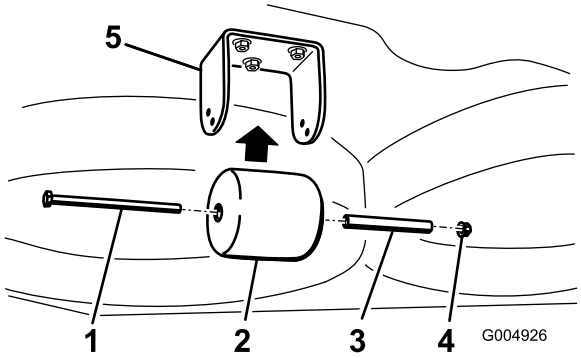

Figure 21
Guardian Mower Decks Only

1. Bolt
2. Rear under-deck roller
3. Spacer
4. Nut
5. Bracket

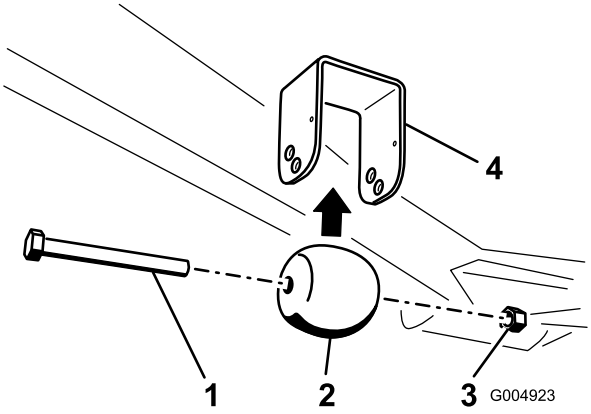

Figure 22
Guardian Mower Decks Only

1. Bolt
2. Front under-deck roller
3. Nut
4. Bracket

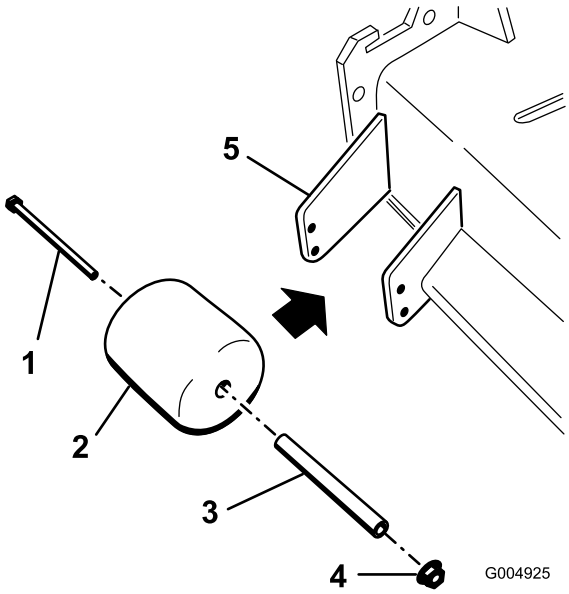

Figure 23
Side-discharge Mower Decks Only

1. Bolt
2. Chute-side roller
3. Spacer
4. Nut
5. Bracket

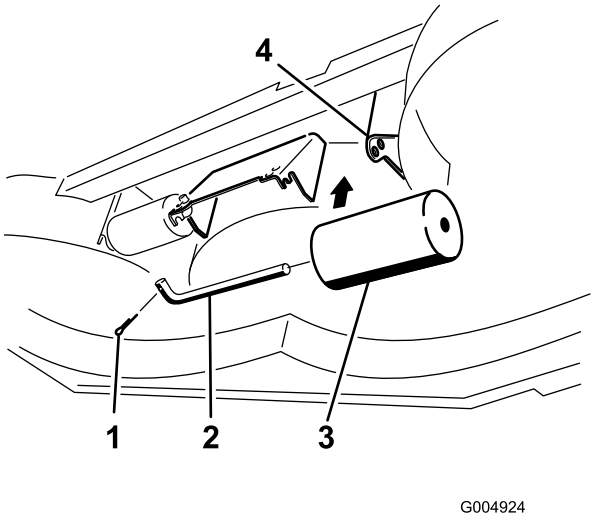

Figure 24
Side-discharge Mower Decks Only

1. Bolt
2. Roller shaft
3. Under-deck roller (2)
4. Bracket

5. Install the fasteners as illustrated.

The Safety Interlock System

⚠ CAUTION

If the safety interlock switches are disconnected or damaged the machine could operate unexpectedly causing personal injury.

- **Do not tamper with the interlock switches.**
- **Check the operation of the interlock switches daily and replace any damaged switches before operating the machine.**

Understanding the Safety Interlock System

The safety interlock system is designed to prevent the engine from starting unless:

- You are sitting on the seat or the parking brake is engaged.
- The power take off (PTO) is disengaged.
- The traction pedal is in the neutral position
- The engine temperature is below the maximum operating temperature.

The safety interlock system also is designed to stop the engine when the traction pedal is moved from the neutral position with the parking brake engaged. If you rise from the seat when the PTO is engaged there is a 1 second delay and then the engine stops.

Testing the Safety Interlock System

Service Interval: Before each use or daily

Test the safety interlock system before you use the machine each time. If the safety system does not operate as described below, have an Authorized Service Dealer repair the safety system immediately.

1. Sitting on the seat, engage the parking brake and move the PTO to on. Try starting the engine; the engine should not crank.
2. Sitting on the seat, engage the parking brake and move the PTO to off. Engage the traction pedal. Try starting the engine; the engine should not crank.
3. Sitting on the seat, engage the parking brake, move the PTO switch to off and allow the traction pedal to return to the neutral position. Now start the engine. While the engine is running, release the parking brake, engage the PTO and rise slightly from the seat. On two wheel drive machines, the engine should stop within 2 seconds. On four wheel drive machines, the mower deck will shut off. The engine will continue to run.
4. Without an operator on the seat, engage the parking brake, move the PTO switch to off and move the traction pedal to the neutral position. Now start the engine. While the engine is running, engage the traction pedal; the engine should stop within 2 seconds.
5. Without an operator on the seat, disengage the parking brake, move the PTO switch to off, and allow the traction pedal to return to the neutral position. Try starting the engine; the engine should not crank.

Using the SCM to Diagnose System Problems

2 wheel drive models only

The machine is equipped with a standard control module (SCM) monitoring system that tracks the function of various key systems. The SCM is located under the seat.

On the face of the SCM are 11 LEDs that illuminate to indicate various system conditions. Seven of these lights can be used by the operator for system diagnosis. Refer to Figure 25 for a description of what each light means. For details on using the rest of the SCM functions, refer to the *Service Manual*, available through your Authorized Toro Distributor.

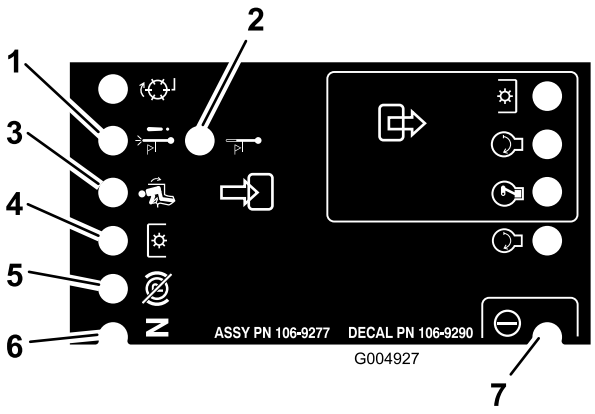

Figure 25

1. High temperature shutdown—the engine temperature has exceeded safe levels and the engine has been shut down. Check the cooling system.
2. High temperature warning—the engine temperature is approaching unsafe levels and the mower deck has been shut down. Check the cooling system.
3. Operator is in the seat
4. The PTO is On
5. The parking brake is not engaged
6. Controls are in Neutral
7. The SCM is receiving power and is operational

Understanding the Diagnostic Light

(4 Wheel Drive only)

The machine is equipped with a diagnostic light which indicates if the electronic controller senses an electronic malfunction. The diagnostic light is located on the control panel (Figure 26). When the electronic controller is functioning correctly and the key switch is moved to the On position, the controller diagnostic light will turn ON for 3 seconds and turn OFF to indicate the light is working properly. If the machine kills the light will turn on steady until the key position is changed. The light will blink if the controller detects a malfunction in the electrical system. The light will stop blinking and automatically reset when the key switch is turned to the Off position once the fault has been resolved.

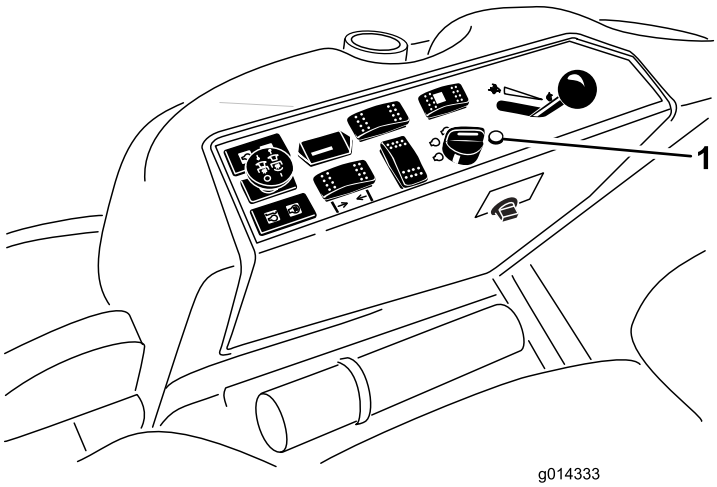

Figure 26

1. Diagnostic light

When the controller diagnostic light blinks, one of the following problems has been detected by the controller:

- One of the outputs has been shorted.
- One of the outputs is open circuited.

Using the diagnostic display, determine which output is malfunctioning; refer to Checking the Interlock Switches.

If the diagnostic light is not illuminated when the key switch is in the On position, this indicates that the electronic controller is not operating. Possible causes are as follows:

- Loop-back is not connected.
- The light is burned out.
- Fuses are blown.
- It is not functioning correctly.

Check the electrical connections, input fuses, and diagnostic light bulb to determine the malfunction. Ensure that the loop-back connector is secured to the wire harness connector.

Diagnostic Ace Display

4 Wheel Drive only

The machine is equipped with an electronic controller which controls most machine functions. The controller determines what function is required for various input switches (i.e. seat switch, key switch, etc.) and turns on the outputs to actuate solenoids or relays for the requested machine function.

For the electronic controller to control the machine as desired, each of the input switches, output solenoids, and relays must be connected and functioning properly.

Use the Diagnostic ACE display tool and over lay to help verify and correct electrical functions of the machine. Contact your Toro distributor for assistance.

Checking the Interlock Switches

4 Wheel Drive only

The purpose of the interlock switches is to prevent the engine from cranking or starting unless the traction pedal is in the Neutral position, the PTO is disengaged and the Lower Mow/Raise control is in the Neutral position. In addition, the engine should stop when the traction pedal is pressed with operator off of the seat or if the parking brake is left engaged.

⚠ CAUTION

If safety interlock switches are disconnected or damaged the machine could operate unexpectedly causing personal injury.

- **Do not tamper with the interlock switches.**
- **Check the operation of the interlock switches daily and replace any damaged switches before operating the machine.**

Verifying the Interlock Switch Function

1. Park the machine on a level surface, lower the cutting decks, stop the engine, and engage the parking brake.
2. Raise the seat.
3. Locate the wire harness and connectors near the controller (Figure 27).
4. Carefully unplug loop back connector from harness connector.

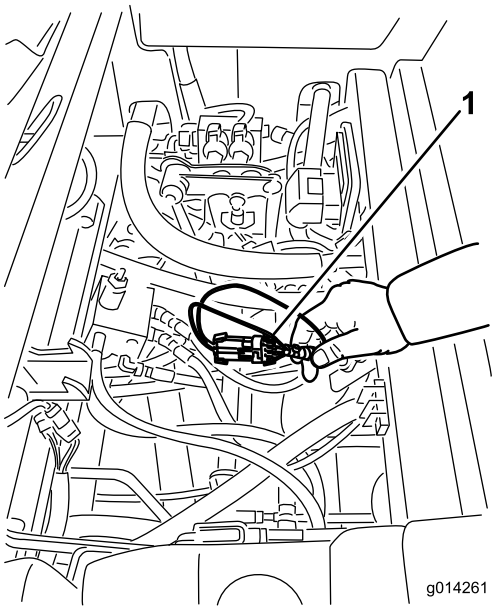

Figure 27

1. Wire harness and connectors

5. Connect the Diagnostic ACE display tool connector to the harness loop back connector (Figure 28).

   Note: Make sure correct overlay decal is positioned on Diagnostic ACE display.

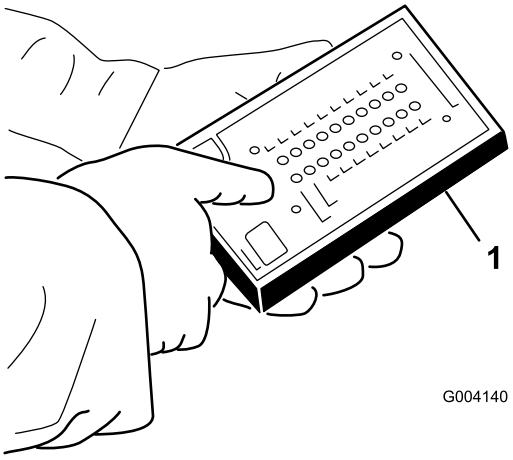

Figure 28

1. Diagnostic ACE

6. Turn the key switch to the On position, but do not start the machine.

   Note: The red text on the overlay decal refers to input switches and the green text refers to outputs.

7. The “inputs displayed” LED, on the lower right column of the Diagnostic ACE, should be illuminated. If the “outputs displayed” LED is illuminated, press the toggle button, on Diagnostic ACE, to change LED to “inputs displayed”.

The Diagnostic ACE will illuminate the LED associated with each of the inputs when that input switch is closed.

8. Individually, change each of the switches from open to closed (i.e., sit on seat, engage traction pedal, etc.), and note that the appropriate LED on Diagnostic ACE will blink on and off when corresponding switch is closed. Repeat this for all switches that you can change by hand.
9. If a switch is closed and the appropriate LED does not turn on, check all wiring and connections to the switch and/or check the switch with an ohm meter. Replace any defective switch and repair any defective wiring.

Note: The Diagnostic ACE also has the ability to detect which output solenoids or relays are turned on. This is a quick way to determine if a machine malfunction is electrical or hydraulic.

Verifying Output Function

1. Park the machine on a level surface, lower the cutting deck, stop the engine, and engage the parking brake.
2. Raise the seat.
3. Locate wire harness and connectors near controller.
4. Carefully unplug loopback connector from harness connector.
5. Connect the Diagnostic ACE connector to the harness connector.

   Note: Make sure correct overlay decal is positioned on Diagnostic ACE.
6. Turn the key switch to the ON position, but do not start machine.

   Note: The red text on the overlay decal refers to input switches and the green text refers to outputs.
7. The "outputs displayed" LED, on lower right column of Diagnostic ACE, should be illuminated. If the "inputs displayed" LED is illuminated, press the toggle button, on the Diagnostic ACE, to change the LED to "outputs displayed".

   Note: It may be necessary to toggle between "inputs displayed" and "outputs displayed" several times to do the following step. To toggle back and forth, press the toggle button once. This may be done as often as required. Do not hold the button.
8. Sit on the seat and attempt to operate the desired function of the machine. The appropriate output LEDs should illuminate to indicate that the ECM is turning on that function.

Note: If the correct output LEDs do not illuminate, verify that the required input switches are in the necessary positions to allow that function to occur. Verify correct switch function.

If the output LEDs are on as specified, but the machine does not function properly, this indicates a non-electrical problem. Repair as necessary.

Note: If each output switch is in the correct position and functioning correctly, but the output LEDs are not correctly illuminated, this indicates an ECM problem. If this occurs, contact your Toro Distributor for assistance.

Important: The Diagnostic ACE display must not be left connected to the machine. It is not designed to withstand the environment of the machine's every day use. When done using the Diagnostic ACE, disconnect it from the machine and connect loop-back connector to harness connector. The machine will not operate without loopback connector installed on the harness. Store the Diagnostic ACE in dry, secure location in the shop, not on the machine.

Positioning the Standard Seat

Changing the Seat Position

The seat can move forward and backward. Position the seat where you have the best control of the machine and are most comfortable.

1. To adjust, move the lever sideways to unlock the seat (Figure 29).

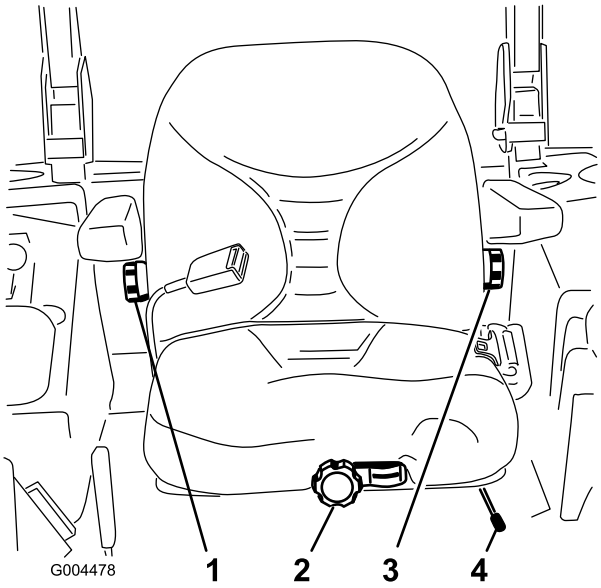

Figure 29

1. Back rest knob
2. Seat suspension knob
3. Lumbar support adjustment knob
4. Seat position adjustment lever

2. Slide the seat to the desired position and release lever to lock in position.
3. Verify that the seat has locked into place by attempting to move it back and forth.

Changing the Seat Suspension

The seat can be adjusted to provide a smooth and comfortable ride. Position the seat where you are most comfortable.

Without sitting on the seat, turn the knob in front either direction to provide the best comfort (Figure 29).

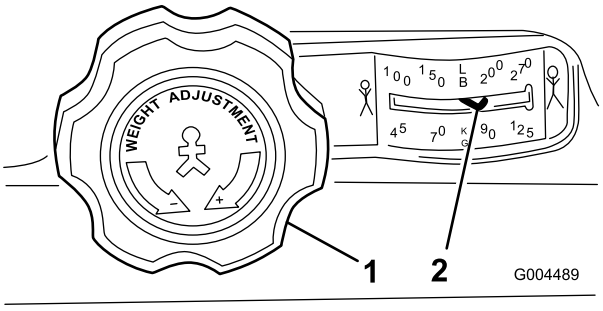

Figure 30

1. Seat suspension knob
2. Operator weight setting

Changing the Back Position

The back of the seat can be adjusted to provide a comfortable ride. Position the back of the seat where it is most comfortable.

To adjust it, turn the knob, under the right-side arm rest, in either direction to provide the best comfort (Figure 29).

Changing the Lumbar Support

The back of the seat can be adjusted to provide a customized lumbar support for your lower back.

To adjust it, turn the knob, under the left-side arm rest, in either direction to provide the best comfort (Figure 29).

Positioning the Deluxe Seat

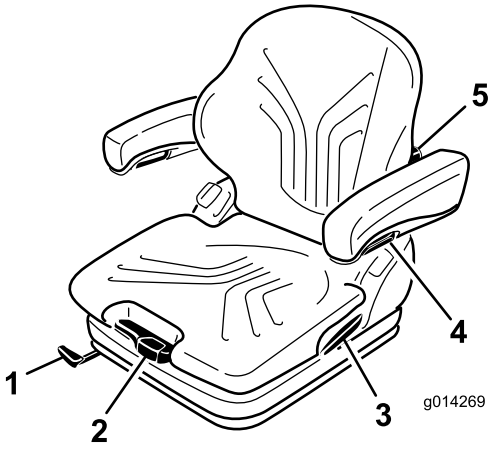

Figure 31

1. Fore/Aft adjustment lever
2. Weight adjustment lever
3. Backrest locking lever
4. Armrest adjustment knob
5. Lumbar support adjusting knob

Changing the Weight Adjustment

The seat can be adjusted to provide a smooth and comfortable ride.

Important: To adjust the seat for the drivers weight the driver must be seated and the ignition key moved to the On position.

The seat is adjusted for the driver's weight by pulling or pressing the weight adjustment lever (Figure 31).

The driver's weight is adjusted correctly when the arrow is in the middle clear area of the viewing window.

Within this viewing area, the seat can be adjusted to a minimum spring movement.

When the minimum/maximum weight adjustment has been reached, you can hear it reaching the upper or lower end stop.

Important: To prevent injury to the operator and/or damage to the machine, the setting for the

driver's weight and the seat must be checked and adjusted before the machine is operated.

Note: To avoid compressor damage during weight adjustment, the compressor must be operated no longer than 1 minute.

Changing the Seat Position

The seat can move forward and backward. Position the seat where you have the best control of the machine and are most comfortable.

1. To adjust, lift the lever to unlock the seat (Figure 31).
2. Slide the seat to the desired position and release lever to lock in position.
3. Verify that the seat has locked into place by attempting to move it back and forth.

   Note: Do not operate the locking lever while operating the machine.

Changing the Lumbar Support

The lumbar support increases both the seating comfort and the performance of the driver.

The back of the seat can be adjusted to provide a customized lumbar support for your lower back.

By turning the adjustment knob upwards, the curvature in the upper part of the backrest cushion can be adjusted. By turning the knob downwards, the curvature in the lower part of the backrest cushion can be adjusted (Figure 31).

0 = No curvature

1 = Maximum curvature at the top

2 = Maximum curvature at the bottom

Adjusting the Armrests

The armrests can be folded back if required and the height individually adjusted.

To adjust the armrests for height, separate the round cap (Figure 31) from the cover, loosen the hexagon nut (13 mm) behind it and adjust the armrests to the desired position and tighten the nut. Replace the cap onto the nut.

⚠ WARNING

Do not install the armrest in the lowest position as the seat belt roller might not function properly.

Changing the Armrest Angle

The angle of the armrests can be adjusted for operator comfort.

To adjust the angle of the armrests, turn the adjustment knob (Figure 31).

When turning the knob to the outside (+) the front part of the armrest will be lifted, when turning the knob to inside (-) it will be lowered.

Changing the Backrest Position

The back of the seat can be adjusted to provide a more comfortable ride. Position the back of the seat where it is most comfortable.

Pull up the locking lever to release the backrest catch (Figure 31). When releasing the backrest catch, do not apply load to the backrest by pressing against it.

By exerting pressure on or off the front or rear of the seat it can be moved to the desired position. Release the locking lever to lock the backrest.

Note: The backrest should not be able to move the into another position after it has been locked.

Raising/Lowering the Seat

To access the hydraulic and other systems under the seat, you need to unlatch the seat and swing it forward.

1. Move the seat latch, located on the left side of the seat, rearward to unlatch the seat and pull forward on the top of the seat (Figure 32).

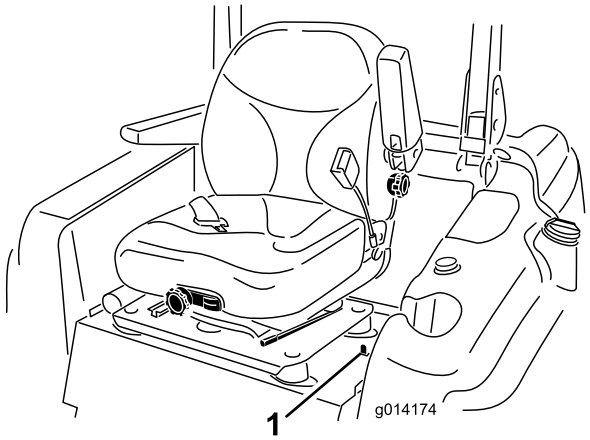

Figure 32

1. Seat latch

2. To lower the seat, pull up on the seat latch release bar and lower the seat into the locked position.

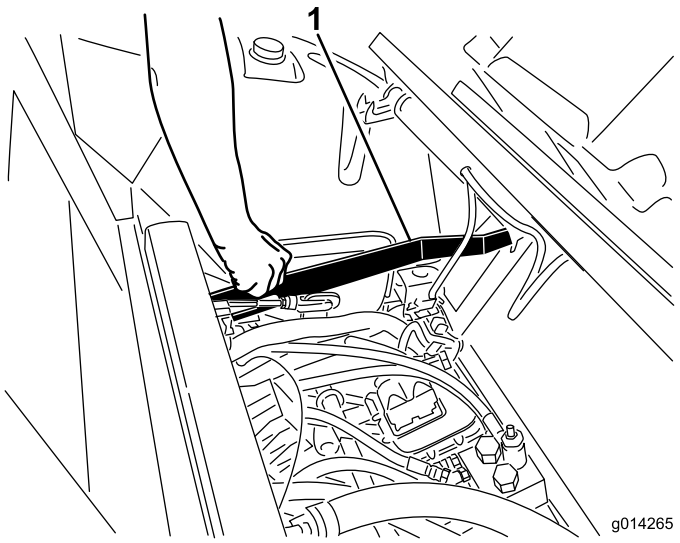

Figure 33

1. Seat latch release bar

Pushing the Machine by Hand

If the machine stalls, runs out of fuel, etc. you may need to push it. To do so, you first need to open both of the hydraulic by-pass valves.

Important: Always push the machine by hand and never a long distance. Never tow the machine because hydraulic damage may occur.

Pushing the Machine

1. Disengage the power take off (PTO), turn the ignition key to off and apply the parking brake.
2. Remove the key from the ignition switch. **Both by-pass valves must be opened.**
3. Lift the seat.
4. Rotate each by-pass valve counterclockwise 1 turn (Figure 34).

   This allows hydraulic fluid to by-pass the pump enabling the wheels to turn.

   Important: Do not rotate the by-pass valves more than 1 turn. This prevents valves from coming out of the body and causing fluid to run out.
5. Disengage the parking brake before pushing.

Changing to Machine Operation

Rotate each by-pass valve clockwise 1 turn and hand tighten them (torque of approximately 71 in-lb (8 N-m)) (Figure 34).

Note: Do not over tighten the by-pass valves.

The machine will not drive unless the by-pass valves are turned in.

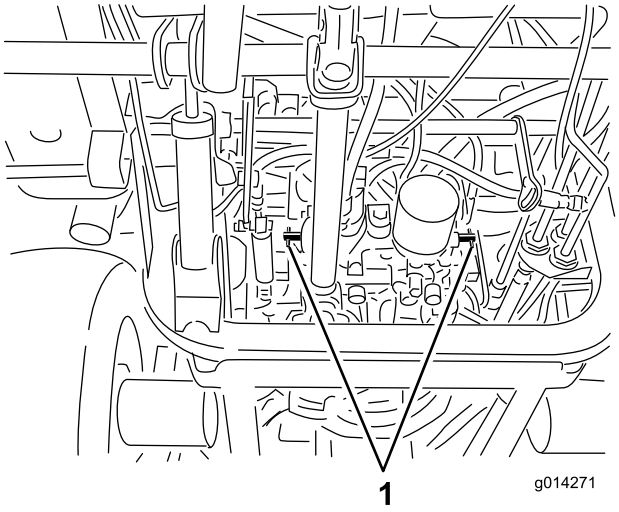

Figure 34

1. By-pass valves

Loading Machines

Use extreme caution when loading units on trailers or trucks. One full width ramp that is wide enough to extend beyond the rear tires is recommended instead of individual ramps for each side of the unit (Figure 35). The lower rear section of the tractor frame extends back between the rear wheels and serves as a stop for tipping backward. Having a full width ramp provides a surface for the frame members to contact if the unit starts to tip backward. If it is not possible to use one full width ramp, use enough individual ramps to simulate a full width continuous ramp.

The ramp should be long enough so that the angles do not exceed 15 degrees (Figure 35). A steeper angle may cause machine components to get caught as the unit moves from ramp to trailer or truck. Steeper angles may also cause the unit to tip backward. If loading on or near a slope, position the trailer or truck so it is on the down side of the slope and the ramp extends up the slope. This will minimize the ramp angle. The trailer or truck should be as level as possible.

Important: Do not attempt to turn the unit while on the ramp; you may lose control and drive off the side.

Avoid sudden acceleration when driving up a ramp and sudden deceleration when backing down a ramp. Both maneuvers can cause the unit to tip backward.

⚠ WARNING

Loading a unit onto a trailer or truck increases the possibility of backward tip-over and could cause serious injury or death.

- **Use extreme caution when operating a unit on a ramp.**
- **Use only a single, full width ramp; Do not use individual ramps for each side of the unit.**
- **If individual ramps must be used, use enough ramps to create an unbroken ramp surface wider than the unit.**
- **Do not exceed a 15 degree angle between ramp and ground or between ramp and trailer or truck.**
- **Avoid sudden acceleration while driving unit up a ramp to avoid tipping backward.**
- **Avoid sudden deceleration while backing unit down a ramp to avoid tipping backward.**

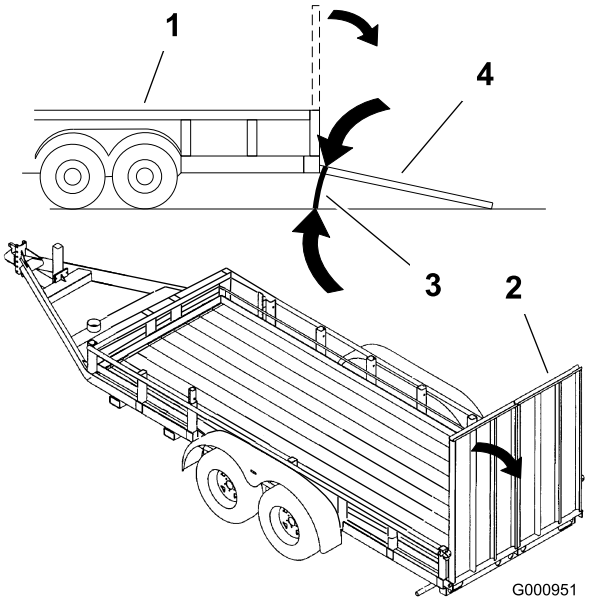

Figure 35

1. Trailer
2. Full width ramp
3. Not greater than 15 degrees
4. Full width ramp—side view

Transporting Machines

⚠ WARNING

Driving on the street or roadway without turn signals, lights, reflective markings, or a slow moving vehicle emblem is dangerous and can lead to accidents causing personal injury.

Do not drive machine on a public street or roadway without signs, lights, and/or markings required by local regulations.

Use a heavy-duty trailer or truck to transport the machine. Ensure that the trailer or truck has all necessary lighting and marking as required by law. Please carefully read all the safety instructions. Knowing this information could help you or bystanders avoid injury.

To transport the machine:

- Ensure that your vehicle, hitch, safety chains, and trailer are adequate for the load you are pulling and that they meet all local traffic regulations for your area.
- Lock the brake and block the wheels.
- Securely fasten the machine to the trailer or truck with straps, chains, cable, or ropes as required by local traffic regulations in your area (Figure 36).

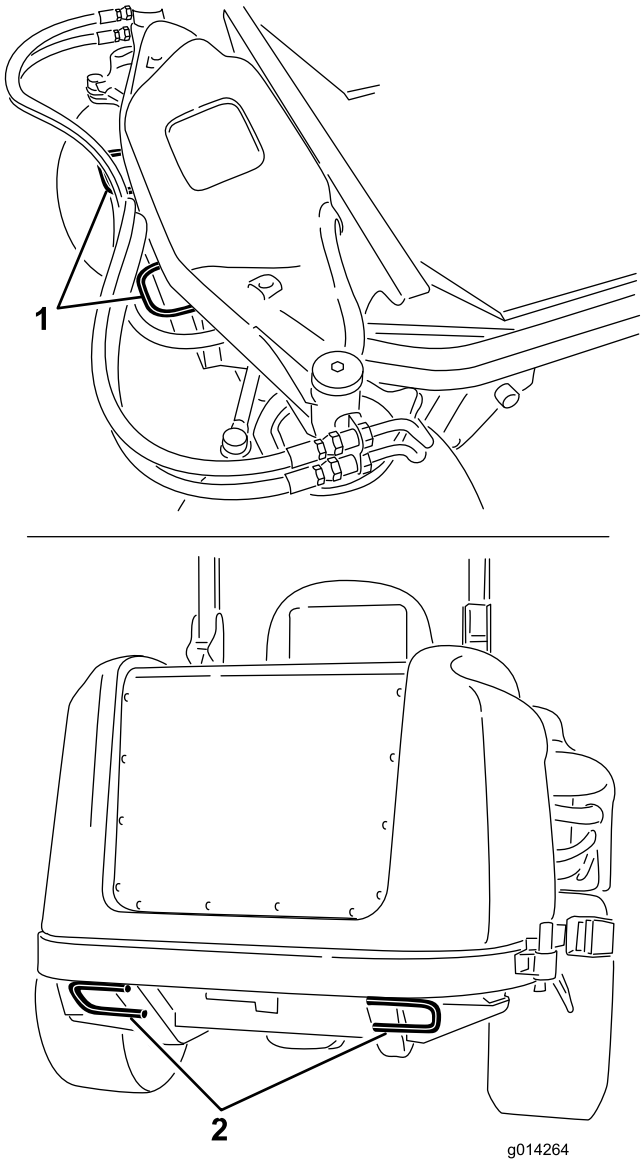

Figure 36

1. Front tie-down
2. Rear tie-downs

Operating Tips

Fast Throttle Setting/Ground Speed

To maintain enough power for the machine and deck while mowing, operate the engine at the fast throttle position and adjust your ground speed for conditions. A good rule to follow is: decrease ground speed as the load on the cutting blades increases; and increase ground speed as load on the blades decreases.

Mowing Direction

Alternate mowing direction to avoid making ruts in the turf over time. This also helps disperse clippings which enhances decomposition and fertilization.

Cutting Speed

To improve cut quality, use a slower ground speed.

Avoid Cutting Too Low

If the cutting width of the mower is wider than the mower you previously used, raise the cutting height to ensure that uneven turf is not cut too short.

Select the Proper Height-of-Cut Setting to Suit Conditions

Remove approximately 1 inch (25 mm) or no more than 1/3 of the grass blade when cutting. In exceptionally lush and dense grass, you may have to slow down the forward speed and/or raise the height-of-cut to the next higher setting.

Important: If cutting more than 1/3 of the grass blade off, or in sparse long grass or dry conditions, the use of flat sail blades is recommended to reduce air-borne chaff, debris, and deck drive component strain.

Long Grass

If the grass is ever allowed to grow slightly longer than normal, or if it contains a high degree of moisture, raise the cutting height higher than usual and cut the grass at this setting. Then cut the grass again using the lower, normal setting.

Keep the Mower Clean

Clean clippings and dirt from the underside of the mower after each use. If grass and dirt build up inside the mower, cutting quality will eventually become unsatisfactory.

To reduce the risk of fire hazard, keep the engine, muffler, battery compartment, parking brake, cutting units, and fuel storage compartment free of grass, leaves, or excessive grease. Clean up any spilled oil or fuel.

Blade Maintenance

Maintain a sharp blade throughout the cutting season because a sharp blade cuts cleanly without tearing or shredding the grass blades. Tearing and shredding turns grass brown at the edges, which slows growth and increases the chance of disease. Check the blades daily for sharpness, and for any wear or damage. Sharpen the blades as necessary. If a blade is damaged or worn, replace it immediately with a genuine Toro replacement blade. Refer to Servicing the Cutting Blades.

Maximizing Air Conditioner Performance

- To limit solar heating, park the machine in a shaded area or leave the doors open in direct sun.
- Make sure the heater shut-off valve is closed.
- Check to make sure the air conditioning screen is clean.
- Check to make sure the air conditioning condenser fins are clean.
- Operate the air conditioner blower at the mid speed setting.
- Verify continuous seal between the roof and the headliner. Correct as required.
- Measure the air temperature at the front center vent in the headliner (Typically stabilize at less than or equal to 50 degrees F.)
- Refer to the Service Manual for additional information

Maintenance

Note: Determine the left and right sides of the machine from the normal operating position.

Recommended Maintenance Schedule(s)

Maintenance Service Interval	Maintenance Procedure
After the first 10 hours	• Check the alternator belt tension. • Check the air conditioning compressor belt tension (cab models) • Torque wheel lug nuts.
After the first 50 hours	• Change the mower deck gear box lubricant • Change the engine oil and filter.
After the first 200 hours	• Change the hydraulic oil and filter.
Before each use or daily	• Test the safety system. • Check the operation of the interlock switches. • Check the engine oil level. • Check the engine coolant level. • Clean the radiator with compressed air (do not use water) • Check the hydraulic fluid level. • Check the mower blades. • Clean the mower deck.
Every 50 hours	• Grease the bearing and bushing grease fittings. • Check battery cable connections. • Check the tire pressure. • Check the condition of the blade drive belts on the mower deck. • Clean the air conditioning screen. (Clean more frequently in extremely dusty or dirty conditions)
Every 100 hours	• Check the alternator belt tension. • Check the air conditioning compressor belt tension (cab models)
Every 150 hours	• Check the lubricant in the mower deck gear box. • Change the engine oil and filter.
Every 200 hours	• Inspect cooling system hoses and seals. Replace them if cracked or torn. • Torque wheel lug nuts.
Every 250 hours	• Clean the cab air filters. (Replace them if they are torn or excessively dirty.) • Clean the air conditioning coil. (Clean more frequently in extremely dusty or dirty conditions)
Every 400 hours	• Change the mower deck gear box lubricant • Service the air cleaner. (Service the air cleaner earlier if the air cleaner indicator shows red. Service it more frequently in extremely dirty or dusty conditions.) • Replace the fuel filter canister. • Check the fuel lines and connections.
Every 800 hours	• Change the hydraulic oil and filter. • Inspect engine valve clearance. Refer to your Engine Operator's Manual.
Every 1,500 hours	• Replace moving hoses
Every 2 years	• Drain and clean the fuel tank. • Flush and replace cooling system fluid.

Important: **Refer to your *Engine Operator's Manual* for additional maintenance procedures. A detailed Service Manual is also available for purchase from your Authorized Toro Distributor.**

Daily Maintenance Checklist

Duplicate this page for routine use.

Maintenance Check Item	For the week of:						
	Mon.	Tues.	Wed.	Thurs.	Fri.	Sat.	Sun.
Check Safety Interlock Operation							
Check Grass Deflector in Down Position (if applicable)							
Check Parking Brake Operation							
Check Fuel Level							
Check Hydraulic Oil Level							
Check Engine Oil Level							
Check Cooling System Fluid Level							
Check Drain Water/Fuel Separator							
Check Air Filter Restriction Indicator[3]							
Check Radiator & Screen for Debris							
Check Unusual Engine Noises[1]							
Check Unusual Operating Noises							
Check Hydraulic Hoses for Damage							
Check Fluid Leaks							
Check Tire Pressure							
Check Instrument Operation							
Check Condition of Blades							
Lubricate All Grease Fittings[2]							
Touch-up Damaged Paint							

1. Check glow plug and injector nozzles, if hard starting, excess smoke or rough running is noted.
2. Immediately after every washing, regardless of the interval listed.
3. If indicator shows red

Notation for Areas of Concern		
Inspection performed by:		
Item	Date	Information

⚠ CAUTION

If you leave the key in the ignition switch, someone could accidently start the engine and seriously injure you or other bystanders.

Remove the key from the ignition before you do any maintenance.

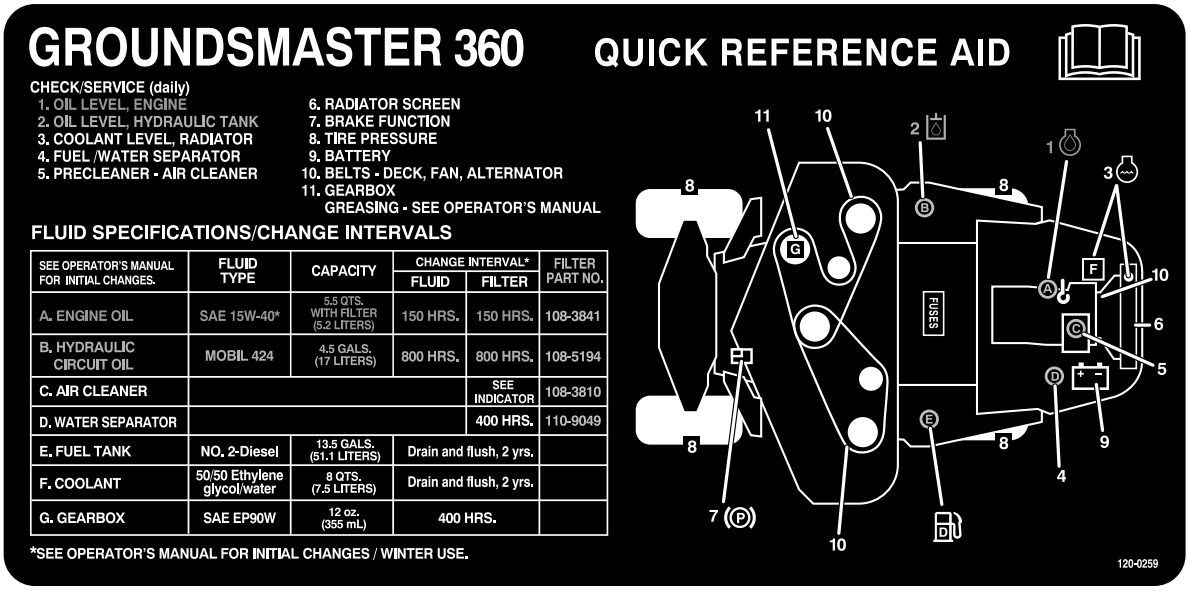

SEE OPERATOR'S MANUAL FOR INITIAL CHANGES.	FLUID TYPE	CAPACITY	CHANGE INTERVAL*		FILTER PART NO.
			FLUID	FILTER	
A. ENGINE OIL	SAE 15W-40*	5.5 QTS. WITH FILTER (5.2 LITERS)	150 HRS.	150 HRS.	108-3841
B. HYDRAULIC CIRCUIT OIL	MOBIL 424	4.5 GALS. (17 LITERS)	800 HRS.	800 HRS.	108-5194
C. AIR CLEANER				SEE INDICATOR	108-3810
D. WATER SEPARATOR				400 HRS.	110-9049
E. FUEL TANK	NO. 2-Diesel	13.5 GALS. (51.1 LITERS)	Drain and flush, 2 yrs.		
F. COOLANT	50/50 Ethylene glycol/water	8 QTS. (7.5 LITERS)	Drain and flush, 2 yrs.		
G. GEARBOX	SAE EP90W	12 oz. (355 mL)	400 HRS.		

Figure 37
Service Interval Chart

Premaintenance Procedures

Using the Hood Prop Rod

1. Release the hood latches.
2. Lift up on the hood until the prop rod can be positioned behind the frame tube (Figure 38).
3. Lower the hood until the rod is in front of and resting against the frame tube.
4. To lower the hood, raise the hood until the prop rod can be raised above the frame tube, then lower the hood.
5. Secure the hood latches

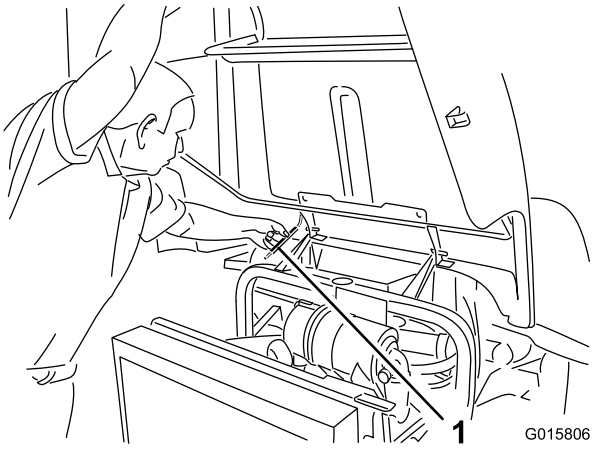

Figure 38

1. Prop rod

Lubrication

Greasing the Bearings and Bushings

Service Interval: Every 50 hours

The machine has grease fittings that must be lubricated regularly with No. 2 General Purpose Lithium Base Grease. If the machine is operated under normal conditions, lubricate all bearings and bushings after every 50 hours of operation. Bearings and bushings must be lubricated daily when operating conditions are extremely dusty and dirty. Dusty and dirty operating conditions could cause dirt to get into the bearings and bushings, resulting in accelerated wear. Lubricate the grease fittings immediately after every washing, regardless of interval specified.

1. Wipe the grease fittings clean so foreign matter cannot be forced into the bearing or bushing.
2. Pump grease into the fittings.
3. Wipe off excess grease.

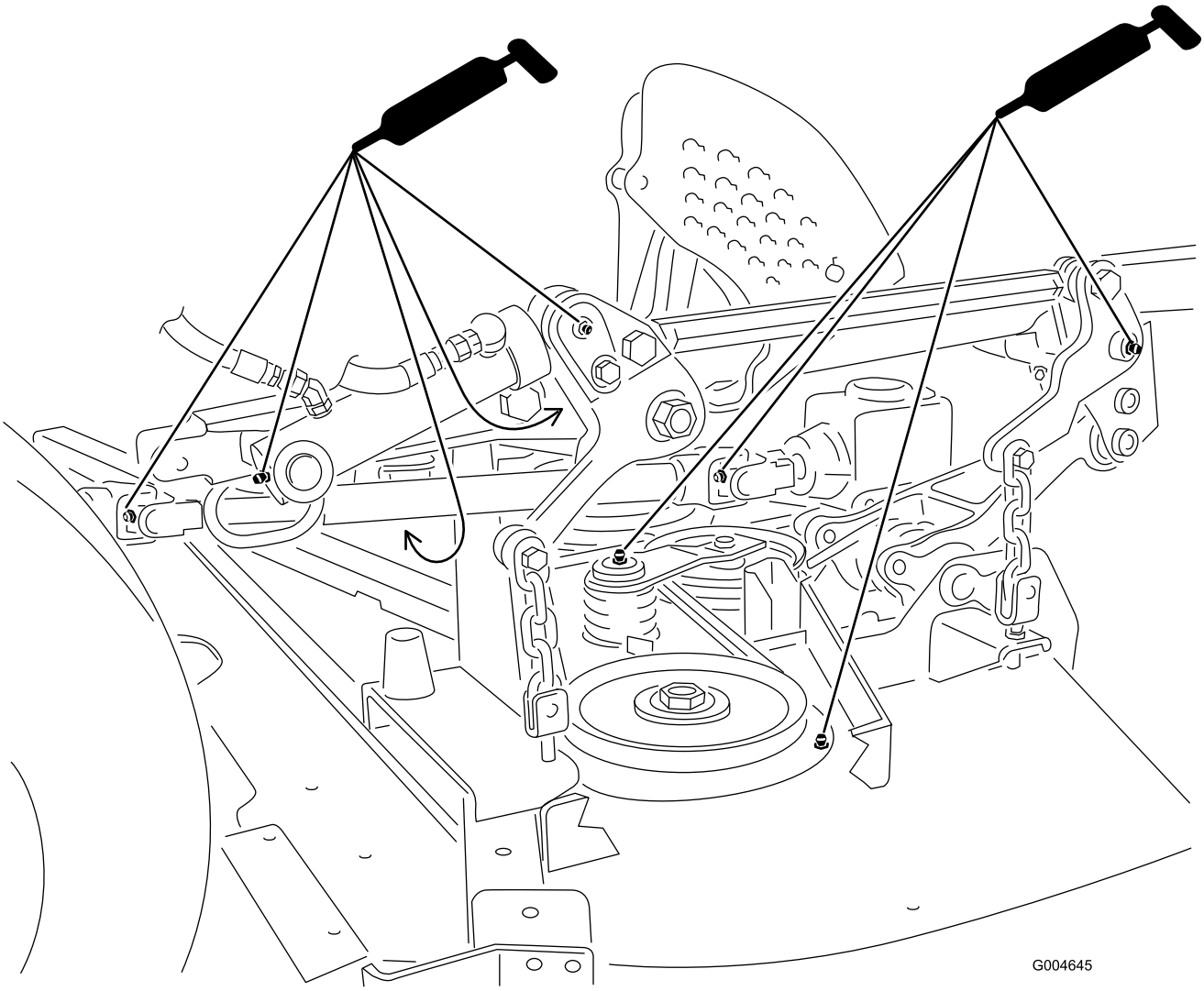

Figure 39

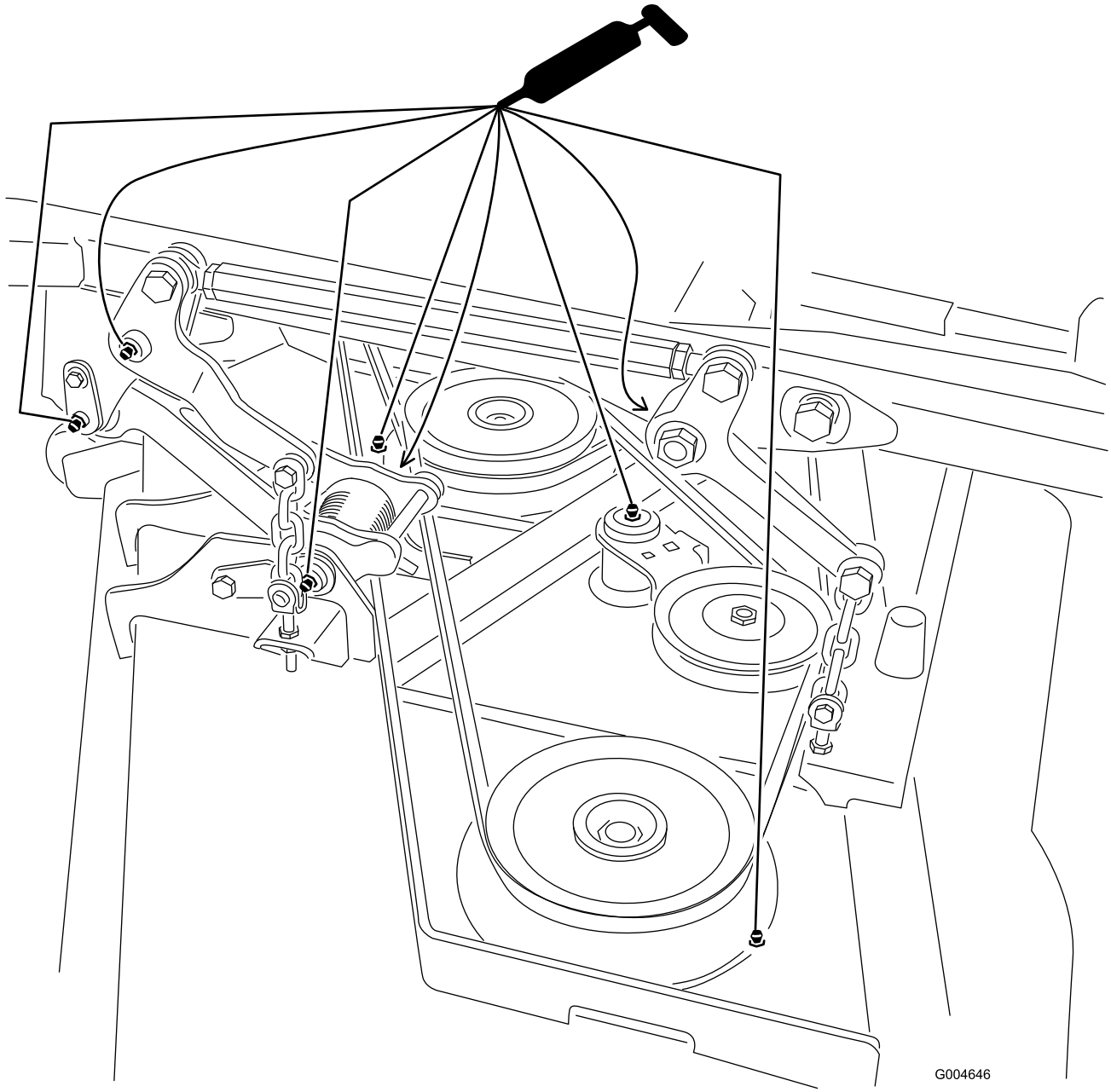

Figure 40

Note: To access the rear steering linkage grease fittings, the storage compartment needs to be removed.

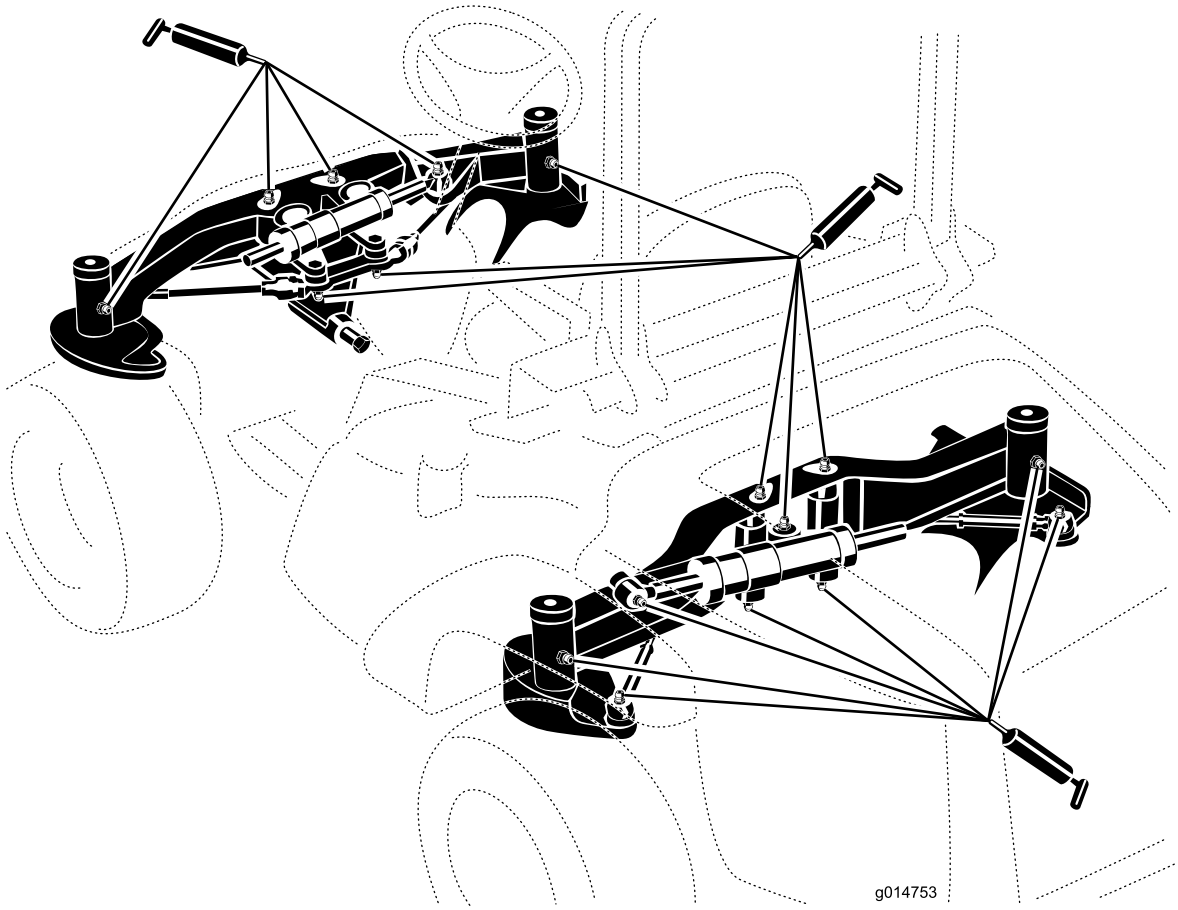

Figure 41

Note: Bearing life can be negatively affected by improper wash down procedures. Do not wash down the unit when it is still hot and avoid directing high-pressure or high volume spray at the bearings or seals.

Servicing the Mower Deck Gear Box Lubricant

The gear box is designed to operate with SAE 80-90 gear lube. Although the gear box is shipped with lubricant from the factory, check the level before operating the cutting unit for the first time and every 150 operating hours thereafter. Change the lubricant in the gear box every 400 operating hours.

Checking the Mower Deck Gear Box Lubricant

Service Interval: Every 150 hours

1. Position the machine and cutting unit on a level surface.
2. Lower the mower deck to the 1 inch (2.5 cm) height-of-cut.
3. Disengage the PTO, release the traction pedal and set the parking brake.
4. Move the throttle lever to the Slow position, stop the engine, remove the key, and wait for all moving parts to stop before leaving the operating position.
5. Lift the footrest, exposing the top of the mower deck.
6. Remove the dipstick/fill plug from the top of the gear box (Figure 42) and make sure that the lubricant is between the marks on the dipstick.

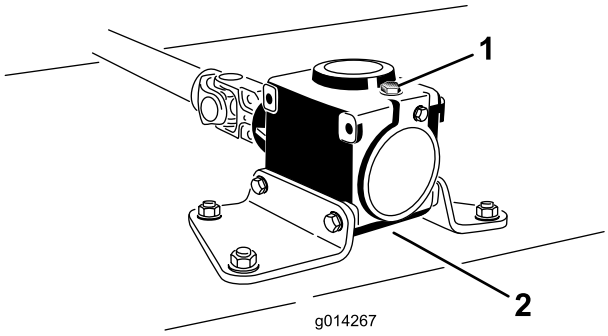

Figure 42

1. Fill plug and dipstick 2. Drain location

7. If the lubricant level is low, add enough lubricant until the level is between the marks on the dipstick.

   Note: Do not over fill or the gearbox may be damaged.

Changing the Mower Deck Gear Box Lubricant

Service Interval: After the first 50 hours

Every 400 hours

1. Position the machine and cutting unit on a level surface.
2. Lower the mower deck to the 1 inch (2.5 cm) height-of-cut.
3. Disengage the PTO, release the traction pedal and set the parking brake.
4. Move the throttle lever to the Slow position, stop the engine, remove the key, and wait for all moving parts to stop before leaving the operating position.
5. Lift the footrest, exposing the top of the mower deck.
6. Remove the dipstick/fill plug from the top of the gear box (Figure 42).
7. Place a drain pan under the drain plug located under the front of the gear box and remove the plug, draining the lubricant into the pan.
8. Replace the drain plug.
9. Add enough lubricant, approximately 12 oz. (283 ml), until the level is between the marks on the dipstick.

   Note: Do not over fill or the gearbox may be damaged.

Engine Maintenance

Servicing the Air Cleaner

Service Interval: Every 400 hours

Check the air cleaner body for damage which could cause an air leak. Replace if damaged. Check the whole intake system for leaks, damage or loose hose clamps.

Service the air cleaner filter only when the service indicator (Figure 43) requires it. Changing the air filter before it is necessary only increases the chance of dirt entering the engine when the filter is removed.

Important: Be sure the cover is seated correctly and seals with the air cleaner body.

1. Release the latch securing the air cleaner cover to the air cleaner body (Figure 43).

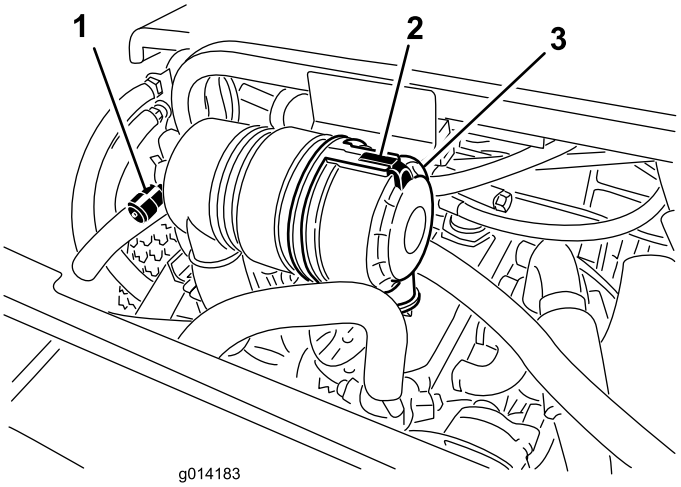

Figure 43

1. Air cleaner service indicator
2. Air cleaner cover
3. Air cleaner cover latch

2. Remove the cover from the air cleaner body. Before removing the filter, use low pressure air (40 psi, clean and dry) to help remove large accumulations of debris packed between outside of the filter and the canister. **Avoid using high pressure air which could force dirt through the filter into the intake tract.**

   This cleaning process prevents debris from migrating into the intake when the filter is removed.

3. Remove and replace the filter.

   Cleaning of the used element is not recommended due to the possibility of damage to the filter media. Inspect the new filter for shipping damage, checking the sealing end of the filter and the body. **Do not use a damaged element.** Insert the new filter by applying pressure to the outer rim of the element to seat it in the canister. **Do not apply pressure to the flexible center of the filter.**

4. Clean the dirt ejection port located in the removable cover. Remove the rubber outlet valve from the cover, clean the cavity and replace the outlet valve.
5. Install the cover orienting the rubber outlet valve in a downward position—between approximately 5:00 to 7:00 when viewed from the end.
6. Secure the latch.

Checking the Engine Oil Level

Service Interval: Before each use or daily

The engine is shipped with oil in the crankcase; however, the oil level must be checked before and after the engine is first started.

The crankcase capacity is approximately 5.5 qt. (5.2 l) with the filter.

Use high-quality engine oil that meets the following specifications:

- API Classification Level Required: CH-4, CI-4 or higher
- Preferred oil: SAE 15W-40 (above 0 degrees F)
- Alternate oil: SAE 10W-30 or 5W-30 (all temperatures)

Toro Premium Engine oil is available from your distributor in either 15W-40 or 10W-30 viscosity.

1. Park the machine on a level surface, stop the engine, set the parking brake and remove the key from the ignition switch.
2. Open the hood.
3. Remove the dipstick, wipe it clean, and install it (Figure 44).

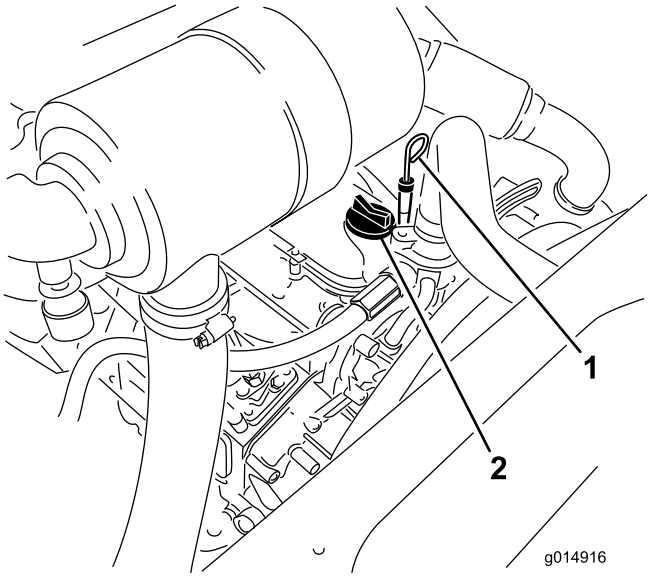

Figure 44

1. Dipstick
2. Oil fill cap

4. Remove dipstick and check oil level on dipstick. The oil level should be up to the Full mark .
5. If the oil level is below the Full mark, remove the fill cap (Figure 44) and add oil until level reaches the Full mark on dipstick.

   Do not overfill.

   Important: Be sure to keep the engine oil level between the upper and lower limits on the oil gauge. Engine failure may occur as a result of over filling or under filling the engine oil.
6. Install the oil fill cap and close the hood.

Changing the Engine Oil and Filter

Service Interval: After the first 50 hours

Every 150 hours

1. Remove the drain plug (Figure 45) and let the oil flow into a drain pan.

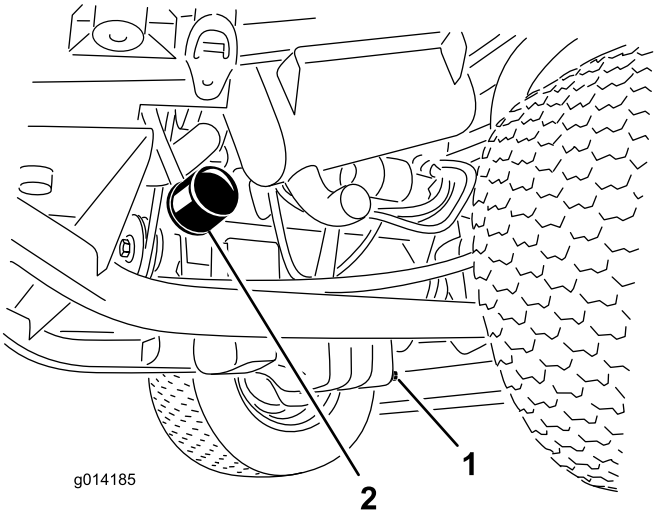

Figure 45

1. Oil drain plug
2. Oil filter

2. When the oil stops, install the drain plug.
3. Remove the oil filter (Figure 45).
4. Apply a light coat of clean oil to the new filter seal.
5. Install the replacement oil filter to the filter adapter. Turn the oil filter clockwise until the rubber gasket contacts the filter adapter, then tighten the filter an additional 1/2 turn.

   Important: Do not over-tighten the filter.
6. Add oil to the crankcase; refer to Checking the Engine Oil Level.

Adjusting the Throttle

1. Move the throttle lever forward to the front of the control panel slot and then move it back approximately 1/8 inch into the FAST idle detent position.
2. Check the position of the speed control lever on the engine fuel injection pump. The speed control lever should be contacting the high speed screw when the throttle control lever is in the FAST (detent) position (Figure 46).

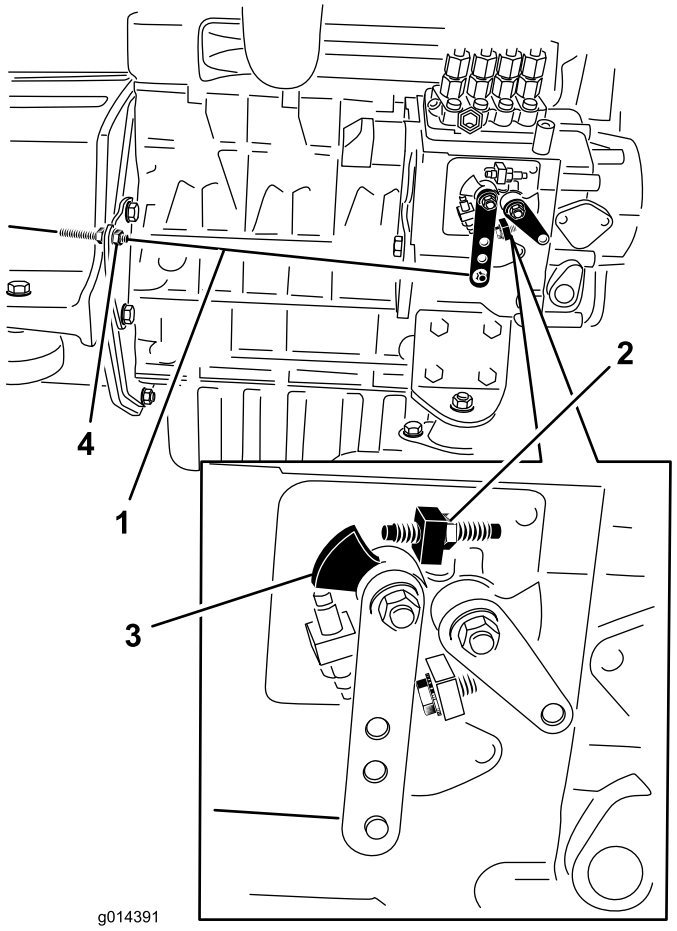

Figure 46

1. Throttle cable
2. High speed screw
3. Speed control lever
4. Cable jam nuts

3. If necessary, the position of the throttle control cable jam nuts can be adjusted until speed control lever contacts high speed screw when throttle control lever is at FAST (detent) position (Figure 46).
4. Make sure that the cable jam nuts are fully tightened after the adjustment

Fuel System Maintenance

Note: Refer to Adding Fuel for proper fuel recommendations.

⚠ DANGER

Under certain conditions, diesel fuel and fuel vapors are highly flammable and explosive. A fire or explosion from fuel can burn you and others and can cause property damage.

- **Use a funnel and fill the fuel tank outdoors, in an open area, when the engine is off and is cold. Wipe up any fuel that spills.**
- **Do not fill the fuel tank completely full. Add fuel to the fuel tank until the level is to the bottom of the filler neck.**
- **Never smoke when handling fuel, and stay away from an open flame or where fuel fumes may be ignited by a spark.**
- **Store fuel in a clean, safety-approved container and keep the cap in place.**

Servicing the Water Separator

Service Interval: Every 400 hours

Drain the water or other contaminants from the water separator (Figure 47) daily. Replace the filter canister after every 400 hours of operation.

1. Place a clean container under the fuel filter.
2. Loosen the drain plug on the bottom of the filter canister (Figure 47).

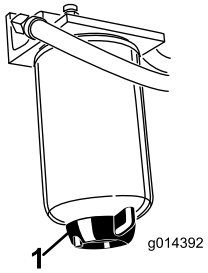

Figure 47

1. Water separator drain plug

3. Clean the area where the filter canister mounts.
4. Remove the filter canister and clean the mounting surface.
5. Lubricate the gasket on the filter canister with clean oil.

6. Install the filter canister by hand until the gasket contacts mounting surface, then rotate it an additional 1/2 turn.
7. Tighten the drain plug on the bottom of the filter canister.

Bleeding the Fuel System

You must bleed the fuel system before starting the engine if any of the following situations have occurred:

- Initial start up of a new machine.
- Engine has ceased running due to lack of fuel.
- Maintenance has been performed upon fuel system components; i.e., filter replaced, separator serviced, etc.

1. Park the machine on a level surface and ensure that the fuel tank is at least half full.
2. Open the hood and secure it with the prop rod.
3. Open the air bleed screw on the fuel injection pump (Figure 48) with a 12 mm wrench.

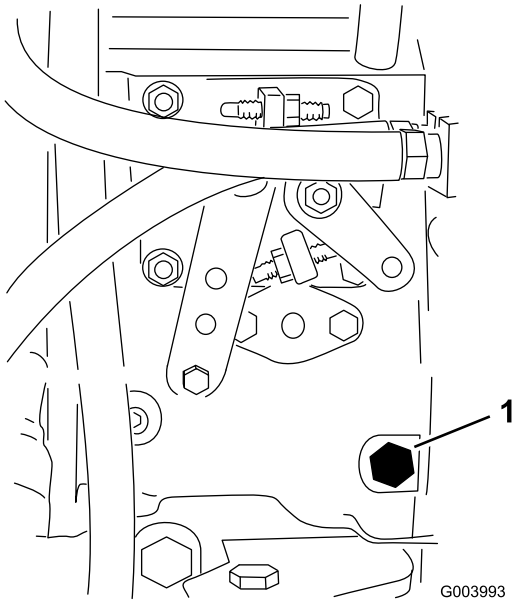

Figure 48

1. Bleed screw

4. Turn the key in the ignition switch to the On position. The electric fuel pump will begin operation, thereby forcing air out around the air bleed screw. Leave the key in the On position until a solid stream of fuel flows out around the screw.
5. Tighten the screw and turn the key to the Off position.

Note: Normally, the engine should start after the above bleeding procedures are followed. However, if engine does not start, air may be trapped between injection pump and injectors; refer to Bleeding Air from the Injectors.

Bleeding Air from the Fuel Injectors

Note: This procedure should be used only if the fuel system has been purged of air through normal priming procedures and the engine will not start; refer to Bleeding the Fuel System.

1. Loosen the pipe connection to the No. 1 nozzle and holder assembly (Figure 49).

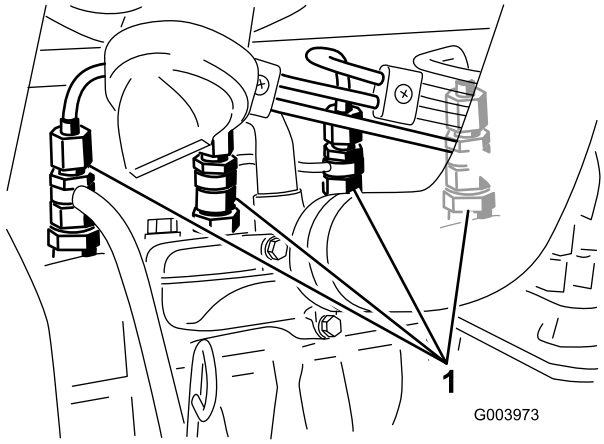

Figure 49

1. Fuel injectors

2. Turn the key in the key switch to the On position and watch the fuel flow around the connector. When you observe a solid flow of fuel, turn the key to the Off position.
3. Tighten the pipe connector securely.
4. Repeat steps 1 through 3 on the remaining nozzles.

Cleaning the Fuel Tank

Service Interval: Every 2 years

Drain and clean fuel tank every 2 years. Also, remove and clean the in-line strainers after draining the tank. Use clean diesel fuel to flush out the tank.

Important: Drain and clean the tank if the fuel system becomes contaminated or if the machine is to be stored for an extended period.

Fuel Lines and Connections

Service Interval: Every 400 hours

Check the fuel lines and connections every 400 hours or yearly, whichever comes first. Inspect them for deterioration, damage, chaffing, or loose connections.

Electrical System Maintenance

Important: Whenever working with the electrical system, always disconnect the battery cables, negative (-) cable first, to prevent possible wiring damage from short-outs.

Checking the Fuses

If the machine stops or has other electrical system issues, check the fuses. Grasp each fuse in turn and remove them one at a time, checking to see if any are blown. If you need to replace a fuse, always use the **same type and amperage rated fuse** as the one you are replacing, **otherwise you could damage the electrical system** (refer to the decal next to the fuses for a diagram of each fuse and its amperage).

The traction unit fuses are located under the seat (Figure 50).

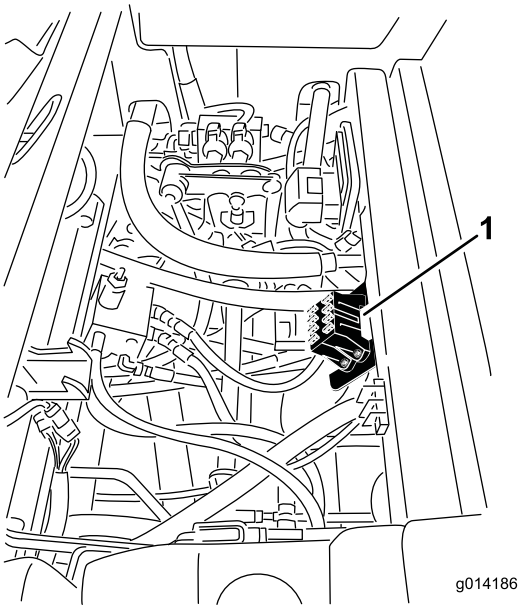

Figure 50

1. Fuse block location

The cab fuses are located in the fuse box on the cab headliner (Figure 51).

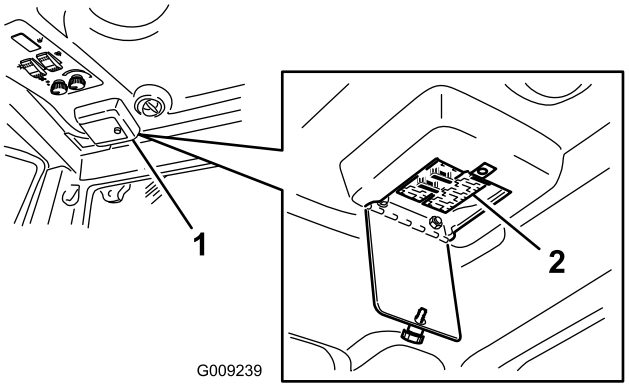

Figure 51

Servicing the Battery

Service Interval: Every 50 hours

Keep the top of the battery clean. If you store the machine in a location where temperatures are extremely high, the battery will run down more rapidly than if the machine is stored in a location where temperatures are cool.

Keep the top of the battery clean by washing it periodically with a brush dipped in ammonia or bicarbonate of soda solution. Flush the top surface with water after cleaning it. Do not remove the fill caps while cleaning the battery.

The battery cables must be tight on the terminals to provide good electrical contact.

WARNING

CALIFORNIA
Proposition 65 Warning

Battery posts, terminals, and related accessories contain lead and lead compounds, chemicals known to the State of California to cause cancer and reproductive harm. Wash hands after handling.

If corrosion occurs at the terminals, disconnect the cables, negative (-) cable first, and scrape the clamps and terminals separately. Reconnect the cables, positive (+) cable first, and coat the terminals with petroleum jelly.

⚠ WARNING

Battery terminals or metal tools could short against metal machine components causing sparks. Sparks can cause the battery gasses to explode, resulting in personal injury.

- **When removing or installing the battery, do not allow the battery terminals to touch any metal parts of the machine.**
- **Do not allow metal tools to short between the battery terminals and metal parts of the machine.**

⚠ WARNING

Incorrect battery cable routing could damage the machine and cables causing sparks. Sparks can cause the battery gasses to explode, resulting in personal injury.

- **Always disconnect the negative (black) battery cable before disconnecting the positive (red) cable.**
- **Always connect the positive (red) battery cable before connecting the negative (black) cable.**

Storing the Battery

If the machine will be stored more than 30 days, remove the battery and charge it fully. Either store it on a shelf or on the machine. Leave the cables disconnected if it is stored on the machine. Store the battery in a cool atmosphere to avoid quick deterioration of the charge in the battery. To prevent the battery from freezing, make sure it is fully charged. The specific gravity of a fully charged battery is 1.265-1.299.

Drive System Maintenance

Checking the Tire Pressure

Service Interval: Every 50 hours

Check the pressure after every 50 operating hours or monthly, whichever occurs first.

Maintain the air pressure in the front and rear tires. The correct air pressure is 25 psi (172 kPa) in the rear tires and 15 psi (103 kPa) in the front tires. If a cab is installed on the machine, the front and rear tires should be inflated to 25 psi (172 kPa). Uneven tire pressure can cause uneven cut. Check the tires when they are cold to get the most accurate pressure reading.

Correcting Steering Misalignment

Four Wheel Drive Models

1. Press the steering selector switch to the rearward (four wheels steer) position (Figure 52).

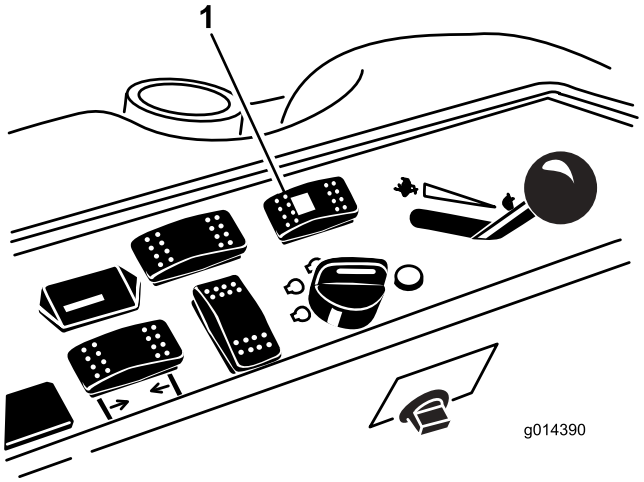

Figure 52

1. Steering selector switch

Two and Four Wheel Drive Models

2. On a paved or dirt surface, turn the steering wheel to the left or right and continue turning until all 4 wheels have stopped turning. Automatic synchronization of wheel alignment should occur.

Important: Doing this procedure on turf can result in turf damage directly under each of the turning tires.

Cooling System Maintenance

⚠ DANGER

Discharge of hot pressurized coolant or touching hot radiator and surrounding parts can cause severe burns.

- **Do not remove the radiator cap when the engine is hot. Always allow the engine to cool at least 15 minutes or until the radiator cap is cool enough to touch without burning your hand before removing the radiator cap.**
- **Do not touch radiator and surrounding parts that are hot.**

⚠ DANGER

The rotating fan and drive belt can cause personal injury.

- **Do not operate the machine without the covers in place.**
- **Keep fingers, hands and clothing clear of rotating fan and drive belt.**
- **Shut off the engine and remove the ignition key before performing maintenance.**

⚠ CAUTION

Swallowing engine coolant can cause poisoning.

- **Do not swallow engine coolant.**
- **Keep out of reach from children and pets.**

Checking the Cooling System

Service Interval: Before each use or daily

The cooling system is filled with a 50/50 solution of water and permanent ethylene glycol anti freeze. Check the level of the coolant in the expansion tank at the beginning of each day before starting the engine. The capacity of the cooling system is 6 quarts (7.5 l).

1. Check the level of the coolant in the expansion tank (Figure 53). The coolant level should be between the marks on the side of the tank.

2. If coolant level is low, remove the expansion tank cap and replenish the system. **Do not overfill**.
3. Install the expansion tank cap.

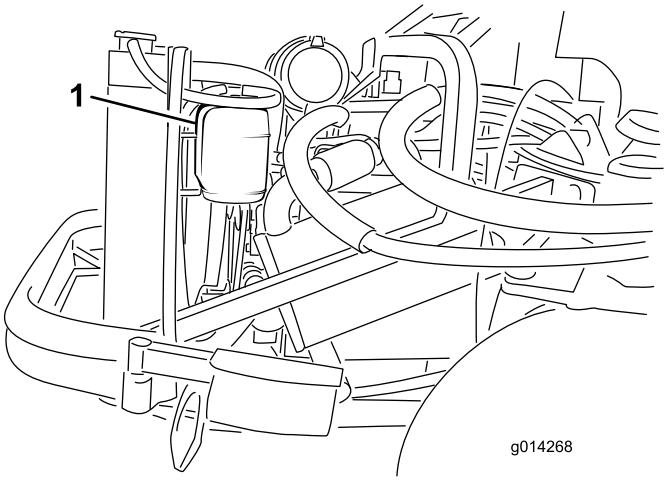

Figure 53

1. Expansion tank

Cleaning the Radiator

Service Interval: Before each use or daily

To prevent the engine from overheating, the radiator must be kept clean. Normally, check the radiator daily and, if necessary, clean any debris off these parts. However, it will be necessary to check and clean the radiator frequently in extremely dusty and dirty conditions.

Note: If the mower deck or engine shuts off due to overheating, first check the radiator for excessive buildup of debris.

Clean the radiator as follows:

1. Open the hood and secure the prop rod.
2. Loosen the flange nut securing the clean out cover to the underside of the rear frame (Figure 54). Rotate the cover to the side to expose the clean out hole in the frame.

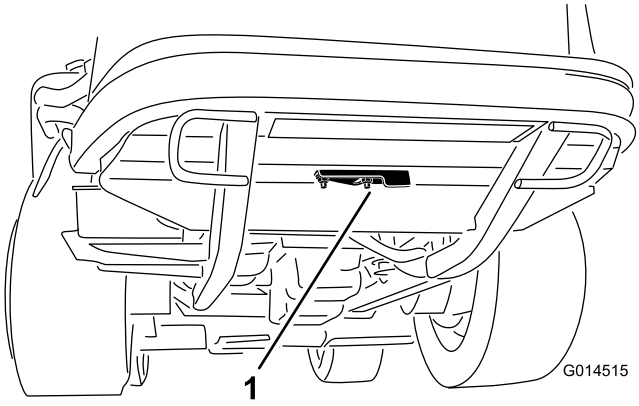

Figure 54

1. Clean out cover

3. Working from the fan side of the radiator, blow out debris with low pressure (50 psi) compressed air **(do not use water)**. Repeat the step from the front of the radiator and again from the fan side.
4. After the radiator is thoroughly cleaned, clean out debris that may have collected in the channel at the radiator base and around the frame. Also, clean out the engine compartment and brake linkage to assure optimum performance.
5. Close the clean out cover and secure the flange nut.
6. Close the hood.

Brake Maintenance

Adjusting the Service Brakes

Adjust the service brakes when there is more than 1 inch of free travel of the brake pedal, or when the brakes do not work effectively. Free travel is the distance the brake pedal moves before you feel braking resistance.

Note: Use the wheel motor backlash to rock the drums back and forth to ensure that the drums are free prior to and after adjustment.

1. To reduce free travel of the brake pedals, tighten the brakes by loosening the front nut on the threaded end of the brake cable (Figure 55).

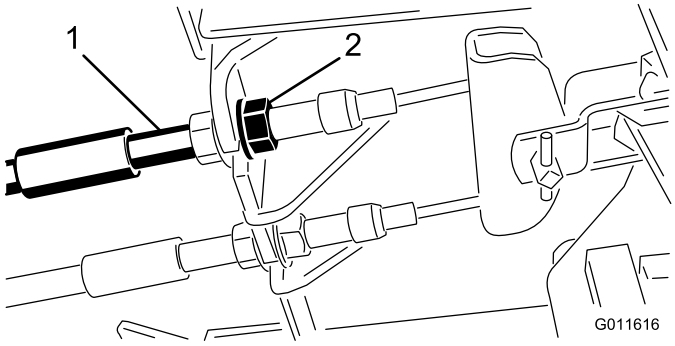

Figure 55

1. Brake cables
2. Front nuts

2. Tighten the rear nut to move the cable backward until brake pedals have 1/2 to 3/4 inch (1.27 to 1.9 cm) of free travel, before wheel lock up is achieved.
3. Tighten the front nuts, ensuring that both cables actuate the brakes simultaneously.

Adjusting the Parking Brake

If the parking brake fails to engage, an adjustment to the brake pawl is required.

1. Loosen the 2 screws securing the parking brake pawl to the frame (Figure 56).

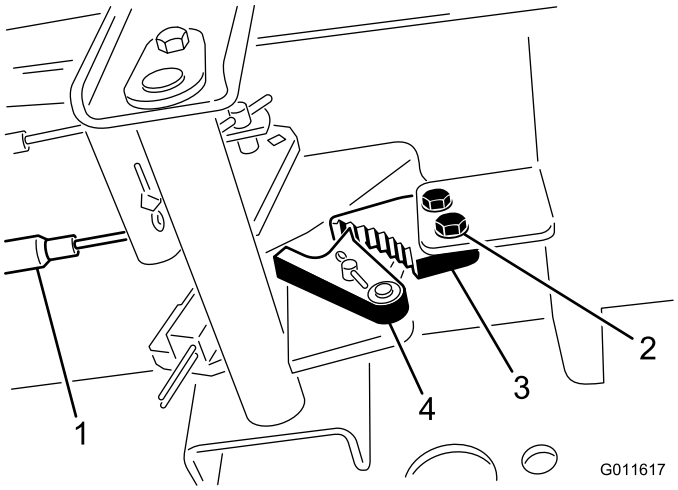

Figure 56

1. Brake cables
2. Screws (2)
3. Parking brake pawl
4. Brake detent

2. Press the parking brake pedal forward until the brake detent completely engages on the brake pawl (Figure 56).
3. Tighten the 2 screws locking the adjustment.
4. Press the brake pedal to release the parking brake.
5. Check the adjustment and readjust as required.

Belt Maintenance

Checking the Alternator Belt

Service Interval: Every 100 hours

After the first 10 hours

1. Open the hood and secure the prop rod.
2. Check the tension of the alternator belt by depressing it (Figure 57) midway between the alternator and the crankshaft pulleys with 22 lb (10 kg) of force.

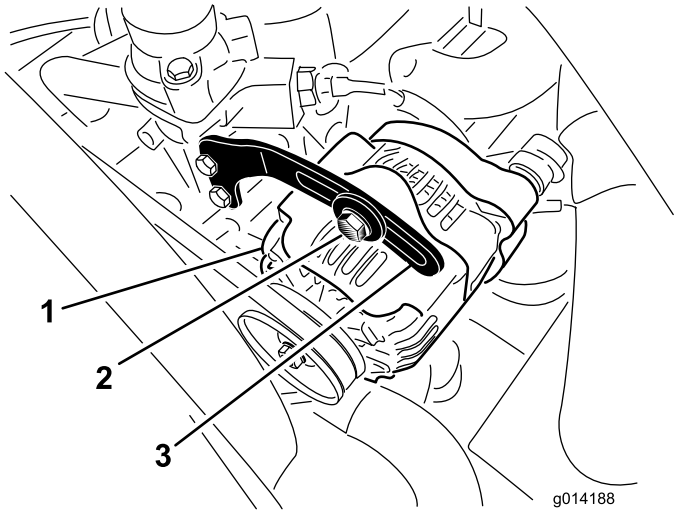

Figure 57

1. Alternator
2. Bolt
3. Brace

The belt should deflect 7/16 inch (11 mm). If the deflection is incorrect, proceed to step 3. If correct, continue operation

3. Loosen the bolt securing the brace to the alternator (Figure 57), and the alternator pivot bolt.
4. Insert a pry bar between the alternator and the engine and pry out on the alternator.
5. When you achieve the proper tension, tighten the alternator, brace and pivot bolts to secure the adjustment.

Replacing the Blade Drive Belts

Service Interval: Every 50 hours

The blade drive belts, tensioned by the spring loaded idler pulleys, are very durable. However, after many hours of use, the belts will show signs of wear. Signs of a worn belt are: squealing when belt is rotating, blades slipping when cutting grass, poor quality of cut, frayed edges, burn marks and cracks. Replace the belts if any of these conditions are evident.

1. Lower the cutting unit to the 1 inch height of cut setting, move the throttle lever to the Slow position, stop the engine, set the parking brake, and remove the ignition key.
2. Remove the belt covers from the top of the cutting unit and set the covers aside.
3. Using a breaker bar or similar tool, move the idler pulley for the top belt (Figure 58) away from the top drive belt to release the belt tension and allow the belt to be slipped off the pulleys.

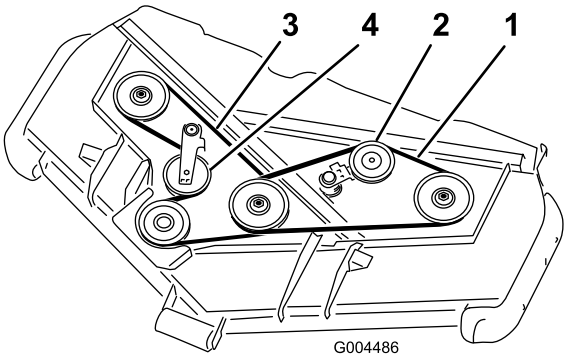

Figure 58

1. Top belt
2. Top idler pulley
3. Bottom belt
4. Bottom idler pulley

4. Route a new belt around the gearbox pulley, bottom spindle pulleys, and idler pulley assembly as shown in Figure 58.
5. Route a new belt around the top spindle pulleys and idler pulley assembly as shown in Figure 58.
6. Grease all deck and deck drive grease points.
7. Install the belt covers.

Controls System Maintenance

Adjusting the Traction Drive for Neutral

Note: If the machine has recently had the hydraulic oil changed or the traction motors or hoses replaced, any air trapped in the system will have to be worked out prior to performing this procedure. This can be accomplished by operating the machine in forward and reverse for a few minutes and then replenishing the oil as required.

When positioned on a level surface, the machine must not creep when the traction pedal is released. If it does creep, adjust as follows:

1. Park the machine on a level surface, stop the engine, and lower the cutting unit to the floor.
2. Jack up the rear of the machine until the rear tires are off the shop floor. Support the machine with jack stands to prevent it from falling accidentally.

   Note: On 4 wheel drive models, the front tires must also be off the shop floor and supported by jack stands.

   ⚠ WARNING

   The engine must be running so this adjustment can be performed. This could cause personal injury.

   Keep hands, feet, face, and other body parts away from any hot parts of the engine and any rotating parts.

3. Start the engine, set the throttle to the Slow position and observe which direction the rear tires rotate.
   - If the left rear tire is rotating, loosen the jam nuts on the left side transmission control rod (Figure 59).

     Note: The forward end of the control rod has a left hand thread. The rear end of the rod, which is connected to the transmission, has a right hand thread.

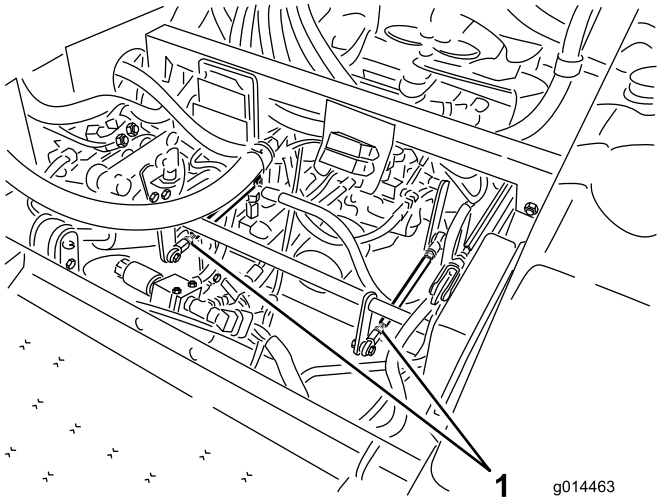

Figure 59

1. Transmission control rods

   - If the left rear tire is rotating in reverse, lengthen the rod by slowly turning the rod counter-clockwise (as viewed from the front) until the left rear tire stops rotating or minimal rotation is detected in reverse
   - If the left rear tire is rotating forward, shorten the rod by slowly turning the rod clockwise (as viewed from the front) until the left rear tire stops rotating.
4. Move the throttle to the Fast position. Make sure the wheel remains stopped or minimal creep is detected in reverse. Adjust as required.
5. Tighten the jam nuts.
6. Repeat the procedure for the right rear tire, if required, by using the right side transmission control rod .
7. Stop the engine. Remove the jack stands and lower the machine to the shop floor.
8. Test drive the machine to make sure it does not creep.

Adjusting the Maximum Ground Speed

1. Disengage the PTO, release the traction pedal to the neutral position and set the parking brake.
2. Move the throttle lever to the Slow position, stop the engine, remove the key, and wait for all moving parts to stop before leaving the operating position.
3. Loosen the jam nut on the stop bolt for the traction pedal (Figure 60).

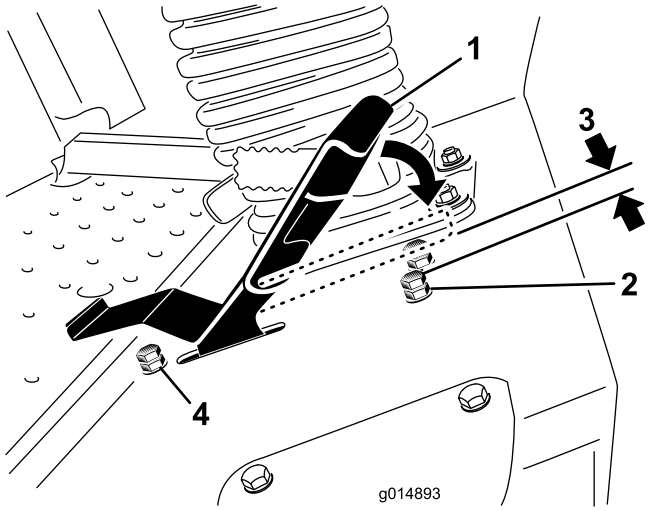

Figure 60

1. Traction pedal
2. Stop bolt w/ jam nut (forward)
3. 0.060 inch (1.5 mm)
4. Stop bolt w/ jam nut (reverse)

4. Adjust the stop bolt all the way in (away from the traction pedal).
5. Using your hand, push the traction pedal all the way forward, with light pressure, until it stops and hold it there. Maintain only light pressure on the pedal when pushing it to the full forward position.
6. With the seat in the raised position, verify that you are not over loading the linkage by making sure the transmission does not move when the pedal is depressed to the stop.
7. Adjust the stop bolt out (towards the traction pedal) until there is a gap of 0.060 inch (1.5 mm) between the head of the stop bolt and the bottom of the traction pedal.
8. Tighten the jam nut to secure the stop bolt in place.
9. The reverse stop bolt may be adjusted if the maximum reverse speed is not acceptable. For a faster reverse speed, adjust the stop bolt in. For a slower reverse speed, adjust the stop bolt out.

Adjusting the Mow Speed Limiter Lever

The mow speed limiter lever (Figure 61) can be flipped forward to limit the traction speed while operating.

1. Disengage the PTO, release the traction pedal to the neutral position and set the parking brake.
2. Move the throttle lever to the Slow position, stop the engine, remove the key, and wait for all moving parts to stop before leaving the operating position.
3. Loosen the jam nut on the mow speed limiter stop bolt (Figure 61).

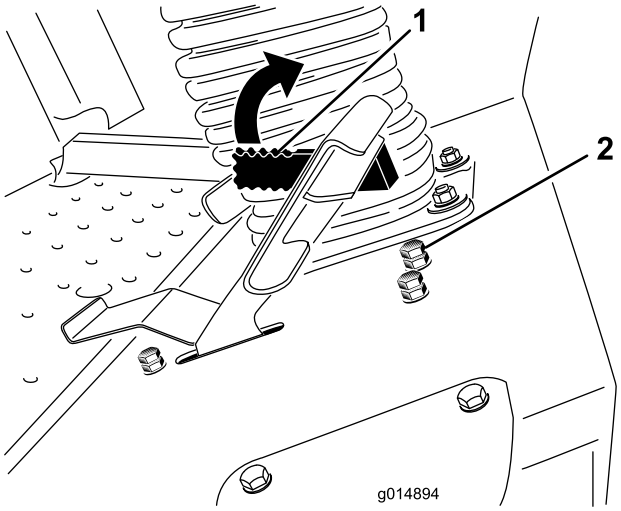

Figure 61

1. Mow speed limiter lever
2. Stop bolt w/ jam nut

4. Thread the stop bolt in to increase the mow speed and out to decrease the mow speed.
5. Tighten the jam nut to lock the adjustment.
6. Rotate the mow speed limiter lever down, operate the machine to verify the adjustment and readjust the stop bolt as required.

Hydraulic System Maintenance

The reservoir is filled at the factory with approximately 18 quarts (17 l) of high quality tractor transmission/hydraulic fluid. The recommended replacement fluid is as follows:

Toro Premium Transmission/Hydraulic Tractor Fluid
(Available in 5 gallon pails or 55 gallon drums. See parts catalog or Toro distributor for part numbers.)

Alternate fluids: If the Toro fluid is not available, Mobil® 424 hydraulic fluid may be used.

Note: Toro will not assume responsibility for damage caused by improper substitutions.

Note: Many hydraulic fluids are almost colorless, making it difficult to spot leaks. A red dye additive for the hydraulic system oil is available in 2/3 oz. (20 ml) bottles. One bottle is sufficient for 4-6 gal (15-22 1) of hydraulic oil. Order part number 44-2500 from your authorized Toro distributor.

Checking the Hydraulic System

Service Interval: Before each use or daily

Check the level of the hydraulic fluid before the engine is first started and daily thereafter.

1. Position the machine on a level surface. Release the traction pedal to the neutral position and start the engine. Run engine at lowest possible RPM to purge the system of air. **Do not engage the PTO**. Raise the deck to extend lift cylinders, stop the engine, and remove the key.
2. Remove the hydraulic fill cap (Figure 62) from filler neck.
3. Remove the dipstick and wipe it with a clean rag (Figure 62).
4. Screw the dipstick all the way into the filler neck; then remove it and check level of fluid (Figure 62).

   If level is not within notched area of the dipstick, add enough high quality hydraulic fluid to raise level to within the notched area. **Do not overfill**.
5. Replace the dipstick and thread the fill cap finger-tight onto filler neck.
6. Check all hoses and fittings for leaks.

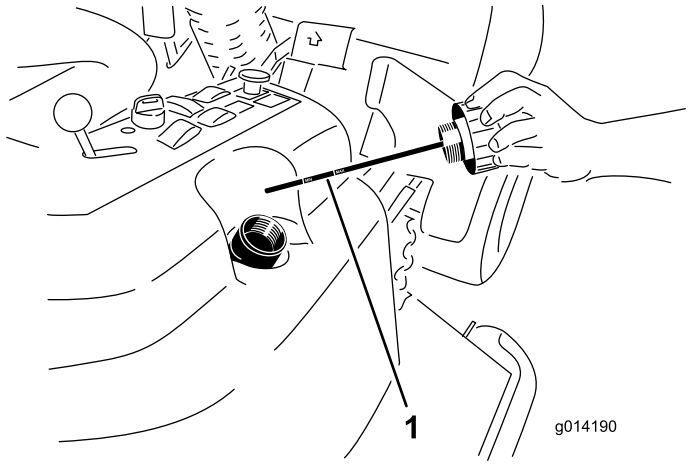

Figure 62

1. Dipstick

Changing the Hydraulic Oil And Filter

Service Interval: After the first 200 hours

Every 800 hours

1. Disengage the PTO, release the traction pedal to the neutral position and set the parking brake.
2. Move the throttle lever to the Slow position, stop the engine, remove the key, and wait for all moving parts to stop before leaving the operating position.
3. Place a large pan under the hydraulic reservoir and transmission case and remove the plugs, draining all of the hydraulic fluid (Figure 63).

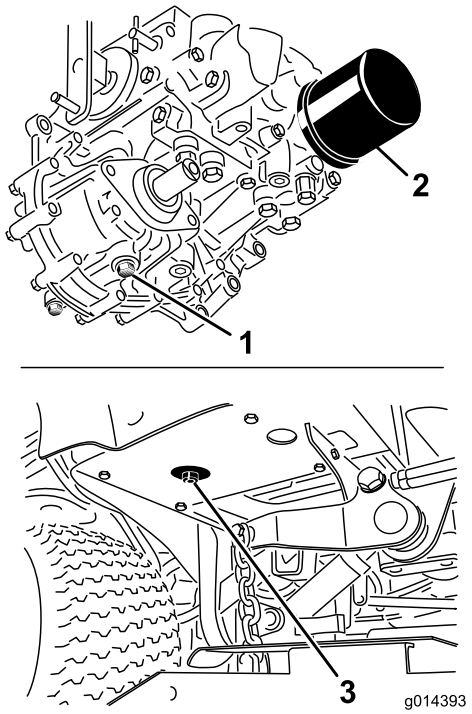

Figure 63

1. Transmission case drain plug
2. Filter
3. Hydraulic reservoir drain plug

4. Clean the area around the hydraulic oil filter and remove it (Figure 63).
5. Immediately install a new hydraulic oil filter.
6. Install the hydraulic reservoir and transmission case drain plugs.
7. Fill the reservoir to the proper level (approximately 18 quarts [17 l]); refer to Checking the Hydraulic Fluid.
8. Start the engine and check for oil leaks. Allow the engine to run for about five minutes, then shut it off.
9. After two minutes, check the level of the hydraulic fluid; refer to Checking the Hydraulic Fluid.

Mower Deck Maintenance

⚠ WARNING

If you raise the machine using only a jack to support it while you work under the mower deck, the jack could tip, causing the mower deck to fall, crushing you or bystanders.

Always secure the machine with at least 2 jack stands when you have the mower deck raised.

⚠ CAUTION

On the top of the mower deck are two links that connect them to the frame. Connected to these links are torsion spring that are under tension (Figure 64). If you disconnect the link the stored energy in the torsion spring will be released and could cause the links to move, damaging your hands or fingers.

Be careful when removing the mower deck from the frame and secure the links before disconnecting them from the frame.

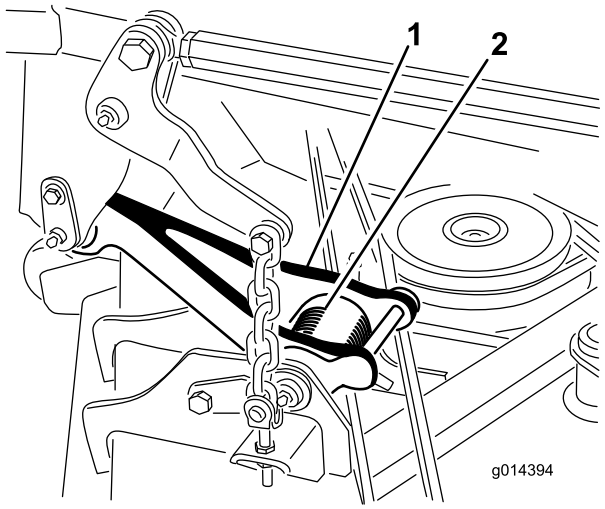

Figure 64

1. Link
2. Torsion spring

Servicing the Cutting Blades

Maintain sharp blades throughout the cutting season because sharp blades cut cleanly without tearing or shredding the grass blades. Tearing and shredding turns grass brown at the edges, which slows growth and increases the chance of disease.

Check the blades daily for sharpness, and for any wear or damage. Sharpen the blades as necessary. If a blade is

damaged or worn, replace it immediately with a genuine Toro replacement blade.

⚠ DANGER

A worn or damaged blade can break, and a piece of the blade could be thrown into the operator's or bystander's area, resulting in serious personal injury or death.

- **Inspect the blade periodically for wear or damage.**
- **Replace a worn or damaged blade.**

Inspect and check the blades every 8 hours.

Before Inspecting or Servicing the Blades

1. Disengage the PTO, release the traction pedal and set the parking brake.
2. Move the throttle lever to the Slow position, stop the engine, remove the key, and wait for all moving parts to stop before leaving the operating position.

Inspecting the Blades

Service Interval: Before each use or daily

1. Inspect the cutting edges (Figure 65). If the edges are not sharp or have nicks, remove and sharpen the blades. Refer to Sharpening the Blades.
2. Inspect the blades, especially the sail area (Figure 65). If you notice any damage, wear, or a slot forming in this area (Figure 65), immediately install a new blade.

⚠ DANGER

If you allow the blade to wear, a slot will form between the sail and flat part of the blade. Eventually a piece of the blade may break off and be thrown from under the housing, possibly resulting in serious injury to you or bystanders.

- **Inspect the blade periodically for wear or damage.**
- **Never try to straighten a blade that is bent or weld a broken or cracked blade.**
- **Replace a worn or damaged blade.**

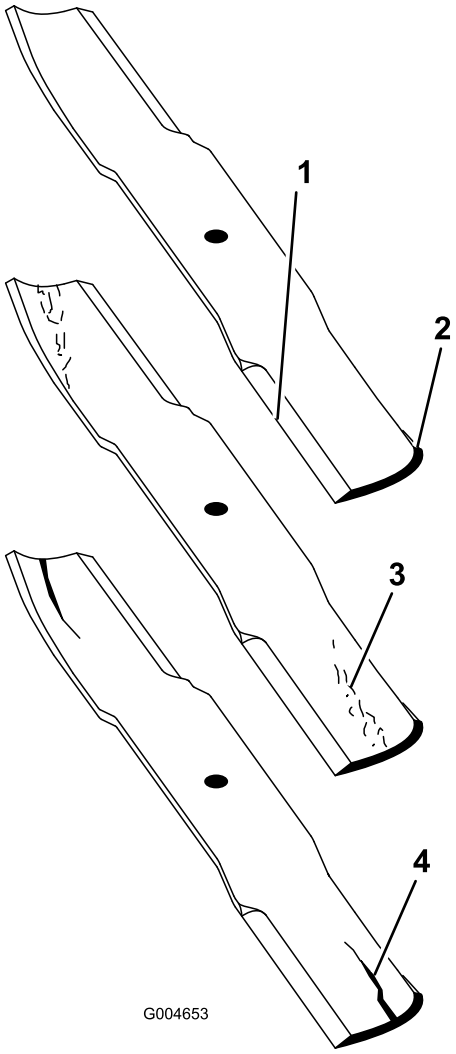

Figure 65

1. Cutting Edge
2. Sail Area
3. Wear/slot Forming
4. Crack

Checking for Bent Blades

1. Disengage the PTO, release the traction pedal and set the parking brake.
2. Move the throttle lever to the Slow position, stop the engine, remove the key, and wait for all moving parts to stop before leaving the operating position.
3. Rotate the blades until the ends face forward and backward (Figure 66). Measure from a level surface to the cutting edge, position **A**, of the blades (Figure 66). Note this dimension.

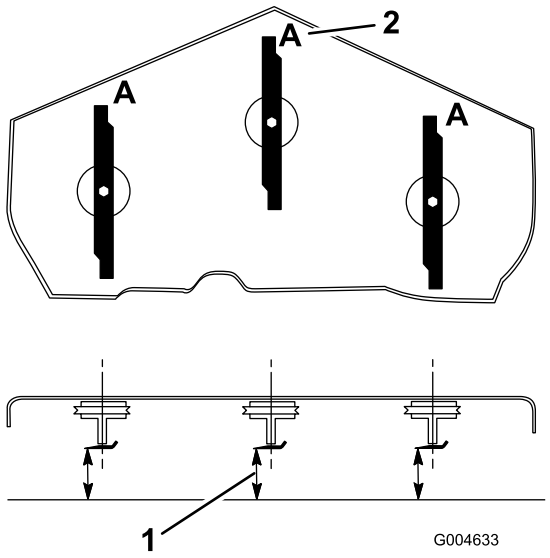

Figure 66

1. Measure here from blade to hard surface
2. Position A

4. Rotate the opposite ends of the blades forward.
5. Measure from a level surface to the cutting edge of the blades at the same position as in step 3 above. The difference between the dimensions obtained in steps 3 and 4 must not exceed 1/8 inch (3 mm). If this dimension exceeds 1/8 inch (3 mm), the blade is bent and must be replaced; refer to Removing the Blades and Installing the Blades.

⚠ WARNING

A blade that is bent or damaged could break apart and could seriously injure or kill you or bystanders.

- **Always replace bent or damaged blade with a new blade.**
- **Never file or create sharp notches in the edges or surfaces of blade.**

Removing the Blades

Blades must be replaced if a solid object is hit, if the blade is out of balance or is bent. To ensure optimum performance and continued safety conformance of the machine, use genuine Toro replacement blades. Replacement blades made by other manufacturers may result in non-conformance with safety standards.

⚠ WARNING

Contact with a sharp blade can cause serious injury.

Wear gloves or wrap sharp edges of the blade with a rag.

1. Hold the blade end using a rag or thickly-padded glove.
2. Remove the blade bolt, anti-scalp plate, and blade from the spindle shaft (Figure 69).

Sharpening the Blades

⚠ WARNING

When sharpening blade, pieces of blade could be thrown and cause serious injury.

Wear proper eye protection when sharpening blades.

1. Sharpen the cutting edge at both ends of the blade (Figure 67). Maintain the original angle. The blade retains its balance if the same amount of material is removed from both cutting edges.

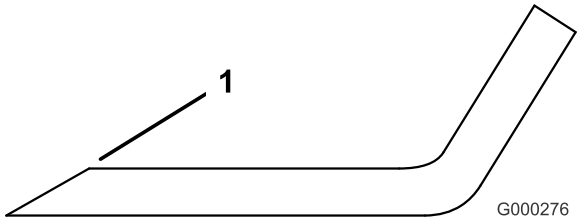

Figure 67

1. Sharpen at original angle

2. Check the balance of the blade by putting it on a blade balancer (Figure 68). If the blade stays in a horizontal position, the blade is balanced and can be used. If the blade is not balanced, file some metal off the end of the sail area only (Figure 69). Repeat this procedure until the blade is balanced.

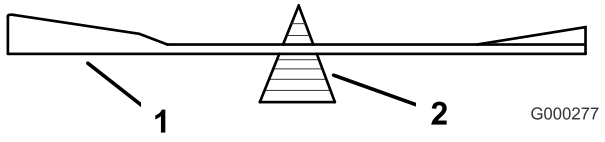

Figure 68

1. Blade
2. Balancer

Installing the Blades

1. Install the blade onto the spindle shaft (Figure 69).

   Important: The curved part of the blade must be pointing upward toward the inside of the mower to ensure proper cutting.

2. Install the anti-scalp plate and blade bolt (Figure 69).

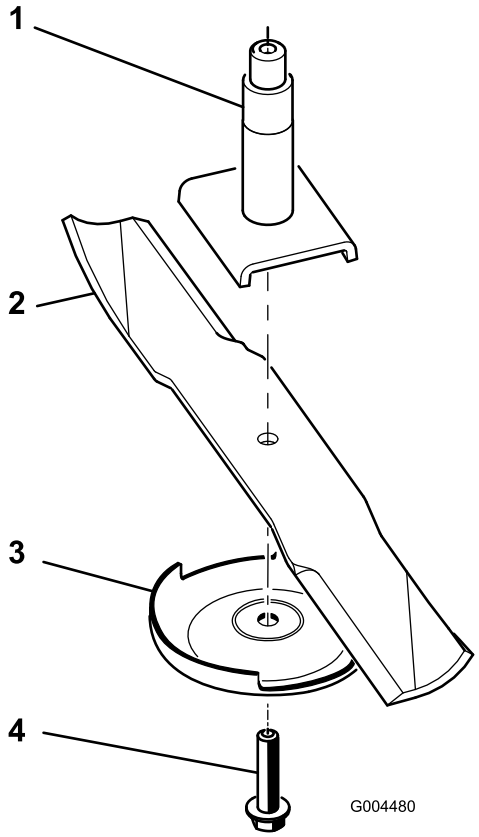

Figure 69

1. Spindle
2. Sail Area of Blade
3. Anti-scalp plate
4. Blade Bolt

3. Torque the blade bolt to 85-110 ft-lb (115-150 N·m).

Correcting Mower Deck Mismatch

If the cut is uneven across the mower swath, correct it as follows:

1. Position the machine on a level surface on the shop floor.
2. Set the cutting unit to the desired height of cut, move the throttle lever to the Slow position, stop the engine, set the parking brake, and remove the ignition key.
3. Check and adjust front and rear tractor tire pressure; refer to Checking Tire Pressure.
4. Check for bent blades.
5. Remove the covers from the top of the cutting units.
6. Rotate the blade on each spindle until the ends face forward and backward.
7. Measure from the floor to the front tip of the cutting edge.
8. Adjust the jam nuts securing the deck yokes/chains to the mower deck until the mower deck is level (Figure 70).

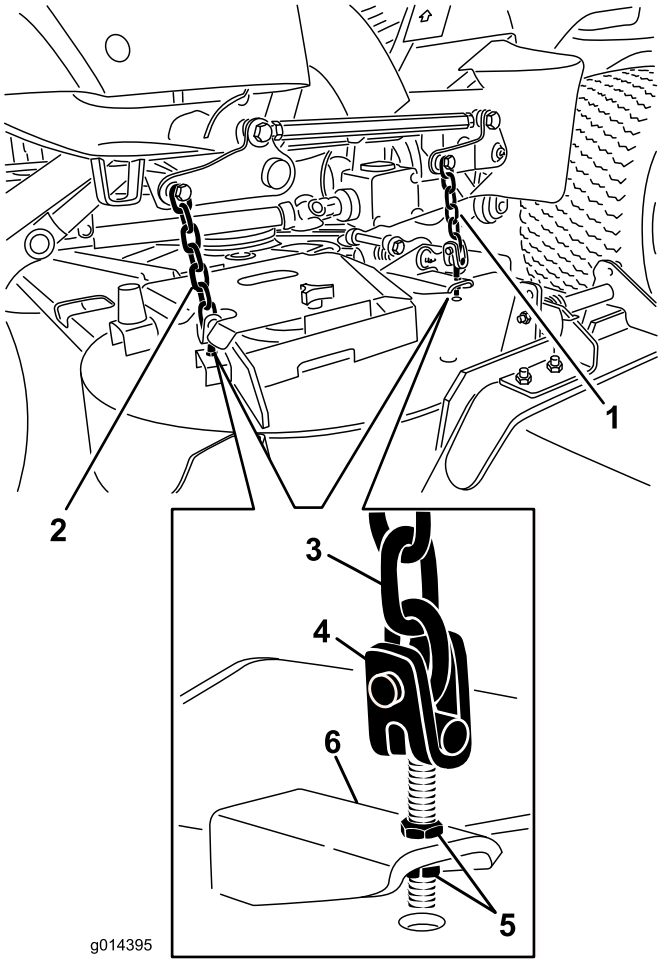

Figure 70

1. Front deck yoke chain
2. Rear deck yoke chain
3. Chain
4. Yoke
5. Jam nut
6. Mower deck

Adjusting the Mower Deck Pitch

Cutting unit pitch is the difference in height-of-cut from the front of the blade plane to the back of the blade plane. Toro recommends a blade pitch of approximately 5/16 inch (8 mm). That is the back of the blade plane is 5/16 inch (8 mm) higher than the front.

1. Position the machine on a level surface on the shop floor.
2. Set the cutting unit to the desired height-of-cut, move the throttle lever to the Slow position, stop

the engine, set the parking brake, and remove the ignition key.

3. Rotate the center blade so that it points straight forward.
4. Using a short ruler, measure from the floor to the front tip of the blade.
5. Rotate the same blade tip to the rear and measure from the floor to the tip of the blade at the rear of the deck.
6. Subtract the front dimension from the rear dimension to calculate the blade pitch.
7. Adjust the jam nuts securing the rear deck yokes/chains to raise the rear of the deck so that the blade pitch is set to 5/16 inch (8 mm) (Figure 70).

Replacing the Grass Deflector

⚠ WARNING

An uncovered discharge opening could allow the machine to throw objects in the operator's or bystander's direction and result in serious injury. Also, contact with the blade could occur.

- **Never operate the machine without a mulch kit or grass deflector installed.**
- **Make sure the grass deflector is in the down position.**

1. Lower the cutting unit to the shop floor, move the throttle lever to the Slow position, stop the engine, set the parking brake, and remove the ignition key.
2. Remove the locknut, bolt, spring and spacer holding the deflector to the pivot brackets (Figure 71). Remove damaged or worn grass deflector.

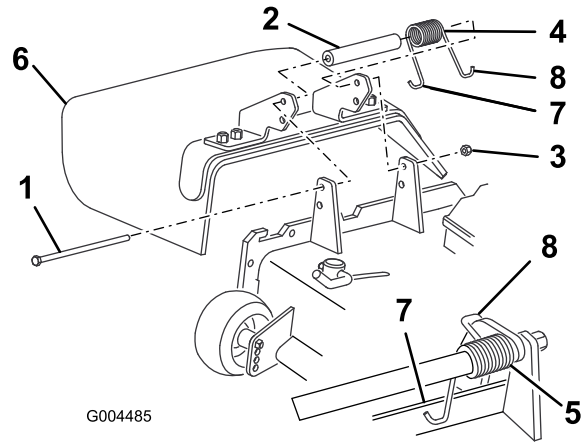

Figure 71

1. Bolt
2. Spacer
3. Locknut
4. Spring
5. Spring installed
6. Grass Deflector
7. Left hand hook end of spring, place behind deck edge before installing bolt
8. Right hand hook end of spring

3. Place the spacer and spring between the replacement grass deflector brackets (Figure 71). Place the left hand J hook end of the spring behind the deck edge.

   Note: Make sure the left hand J hook end of the spring is installed behind the deck edge before installing the bolt as shown in Figure 71.

4. Install the bolt and nut. Place the right hand J hook end of the spring around the grass deflector (Figure 71).

   Important: The grass deflector must be able to lower down into position. Lift the deflector up to test that it lowers into the full down position.

Cab Maintenance

Cleaning the Cab Air Filters

Service Interval: Every 250 hours (Replace them if they are torn or excessively dirty.)

1. Remove the thumb screws and grates from over both the in-cab and rear cab air filters (Figure 72).

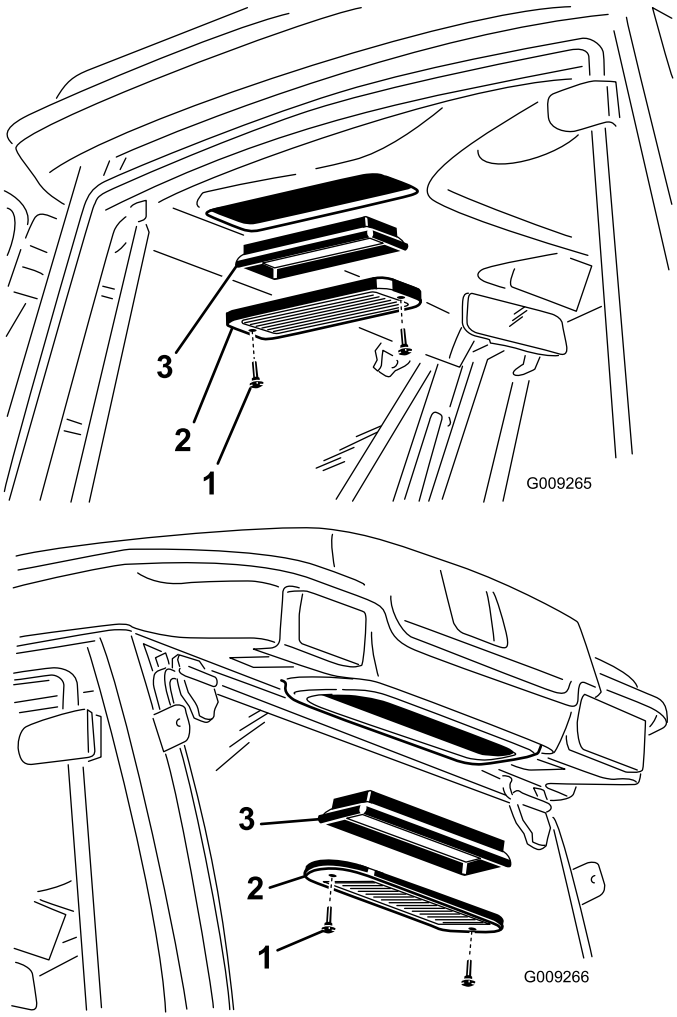

Figure 72

1. Thumb screw
2. Grate
3. Air filter

2. Clean the filters by blowing clean, oil free, compressed air through them.

   Important: If either filter has a hole, tear, or other damage, replace it.

3. Install the filters and grate, securing them with the thumb screws.

Cleaning the Air Conditioning Coil

Service Interval: Every 250 hours (Clean more frequently in extremely dusty or dirty conditions)

1. Stop the engine and remove the key.
2. Remove the 4 screws securing the fan and the condenser cover to the fan mount (Figure 73).
3. Carefully lift the fan out of the condenser cover.

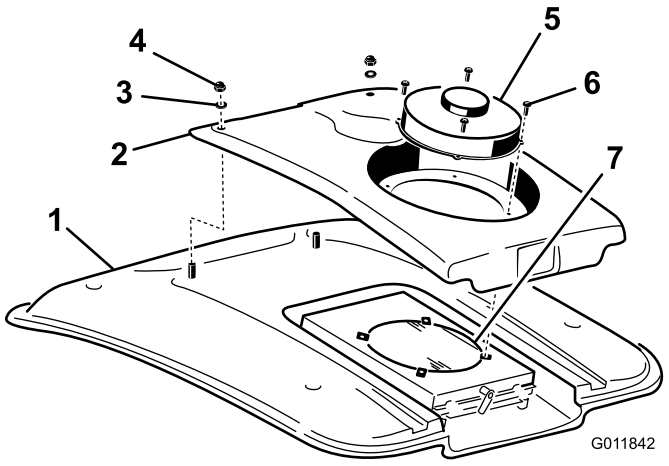

Figure 73

1. Cabin roof
2. Condenser cover
3. Washer
4. Nut
5. Fan
6. Screw
7. Air conditioning condenser

4. Remove the two nuts and washers securing the front of the condenser cover to the cab roof (Figure 73).
5. Unplug the fan wire connectors located between the cover and roof.
6. Remove the fan and the cover.
7. Remove and clean the A/C Condenser Screen. Refer to Cleaning the A/C Condenser Screen.
8. Clean the air conditioning condenser thoroughly with compressed air (Figure 73).
9. Replace the A/C Condenser Screen.
10. Replace the condenser cover and fan. Make sure to connect the fan wires before securing the condenser cover.

Cleaning the A/C Condenser Screen

Service Interval: Every 50 hours (Clean more frequently in extremely dusty or dirty conditions)

1. Stop the engine and remove the key.
2. On the rear of the fan mount, rotate the latch to the side (Figure 74).

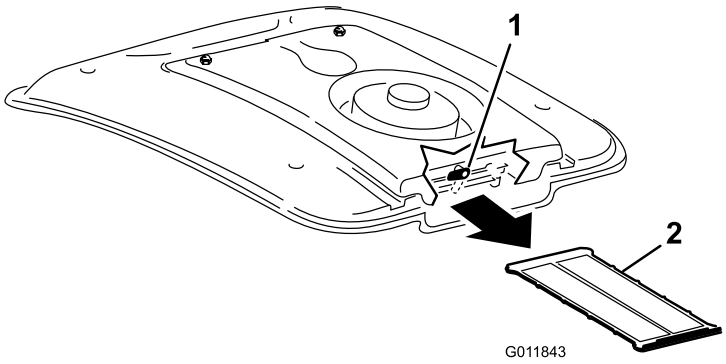

Figure 74

1. Latch
2. A/C screen

3. Slide the A/C screen out from under the air conditioning coil (Figure 74).
4. Clean the screen thoroughly with compressed air (Figure 74).
5. Slide the screen into the channels under the air conditioning coil and rotate the latch downward.

Cleaning

Cleaning Under the Mower

Service Interval: Before each use or daily

Remove the grass buildup under the mower daily.

1. Disengage the PTO, release the traction pedal to the neutral position and set the parking brake.
2. Move the throttle lever to the Slow position, stop the engine, remove the key, and wait for all moving parts to stop before leaving the operating position.
3. Raise the mower to the transport position.
4. Raise the front of the machine by using jack stands.
5. Thoroughly clean the underside of the mower with water.

Cleaning the Cab

Important: Do not use a pressure washer to clean the door and roof seals of the cab. Pressure washing can break the seals and cause leakage. Use garden hose pressure.

Waste Disposal

Engine oil, batteries, hydraulic oil, and engine coolant are pollutants to the environment. Dispose of these according to your state and local regulations.

Storage

Engine

1. Drain the engine oil from the oil pan and replace the drain plug.
2. Remove and discard the oil filter. Install a new filter.
3. Refill the engine with 4 quarts (3.8 l) of recommended motor oil. Refer to Changing the Engine Oil.
4. Start the engine and run it at idle speed for two minutes.
5. Drain the fuel from the fuel tank, fuel lines, pump, filter, and separator. Flush the fuel tank with clean diesel fuel and connect all fuel lines.
6. Thoroughly clean and service the air cleaner assembly.
7. Seal the air cleaner inlet and the exhaust outlet with weather proof masking tape.
8. Check the oil filler cap and fuel tank cap to ensure they are securely in place.

Machine

1. Thoroughly clean the machine, deck and the engine, paying special attention to these areas:
   - Radiator and radiator screen
   - Underneath the deck
   - Under the deck belt covers
   - Counterbalance springs
   - PTO shaft assembly
   - All grease fittings and pivot points
   - Remove the control panel and clean out inside of the control box
   - Beneath the seat plate and top of the transmission
2. Check and adjust front and rear tire pressure; refer to Checking Tire Pressure.
3. Remove, sharpen, and balance the mower blades. Install the blades and torque the blade fasteners to 85-110 ft-lb (115-149 N·m).
4. Check all fasteners for looseness and tighten them as necessary.
5. Grease or oil all grease fittings, pivot points, and transmission by-pass valve pins. Wipe off any excess lubricant.
6. Lightly sand and use touch up paint on painted areas that are scratched, chipped or rusted. Repair any dents in the metal body.
7. Service the battery and cables as follows:

   A. Remove the battery terminals from the battery posts.

   B. Clean the battery, terminals, and posts with a wire brush and baking soda solution.

   C. Coat the cable terminals and battery posts with Grafo 112X skin-over grease (Toro Part No. 505-47) or petroleum jelly to prevent corrosion.

   D. Slowly recharge the battery for 24 hours every 60 days to prevent lead sulfation of the battery.

Schematics

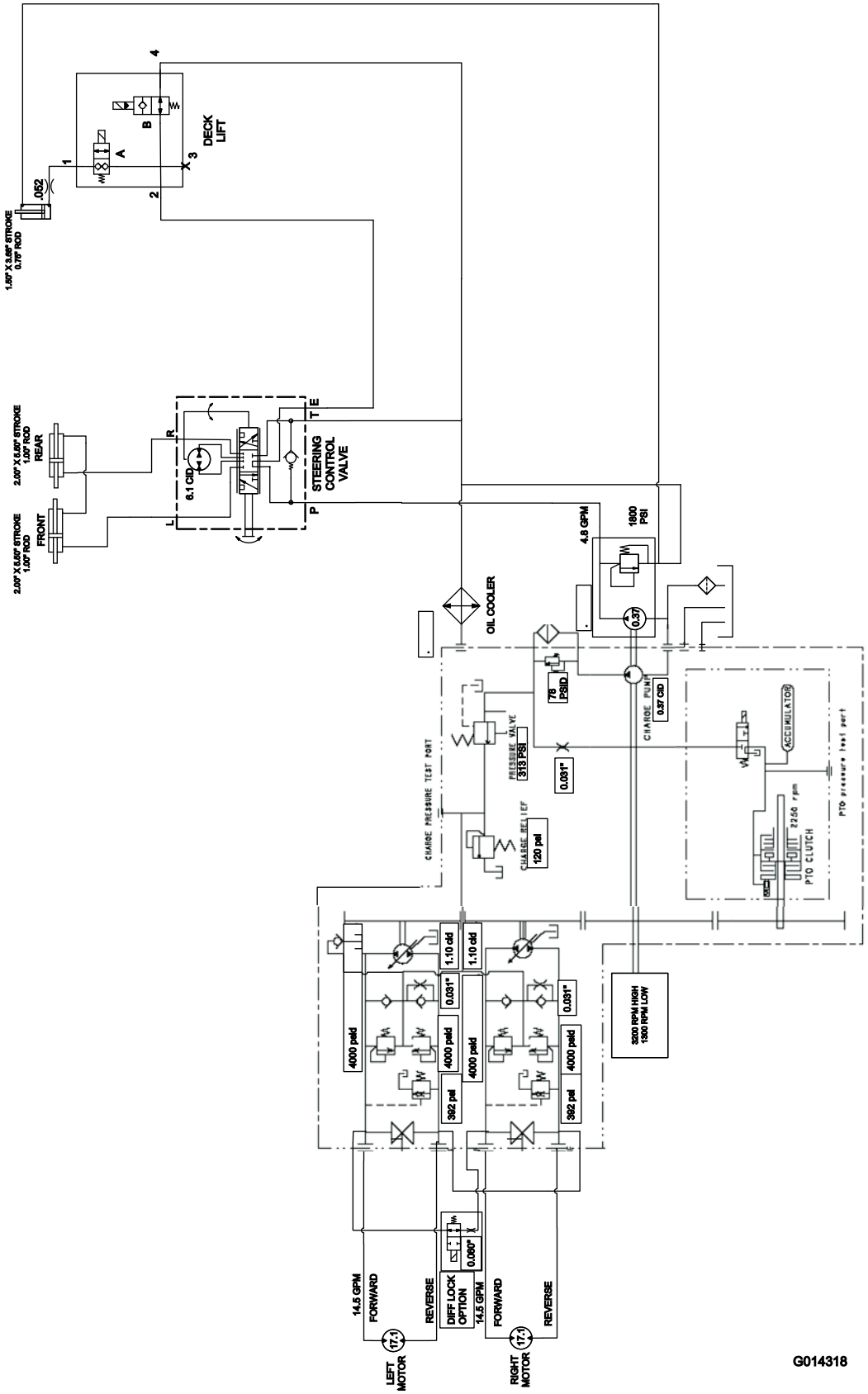

Hydraulic Schematic-Models 30534, 30535 & 30536 (Rev. A)

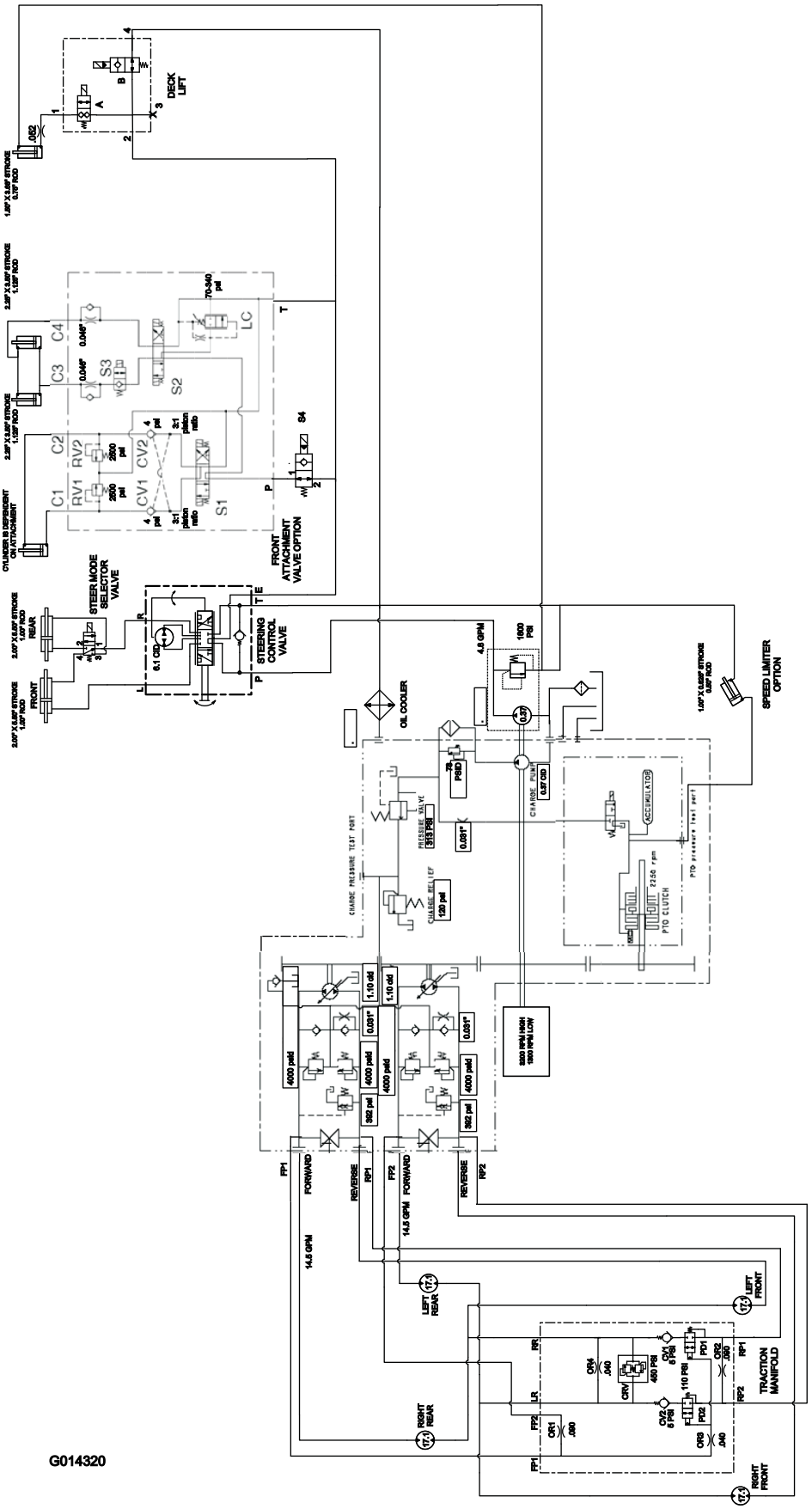

Hydraulic Schematic-Models 30537, 30538, 30539, 30540, 30541 & 30542 (Rev. A)

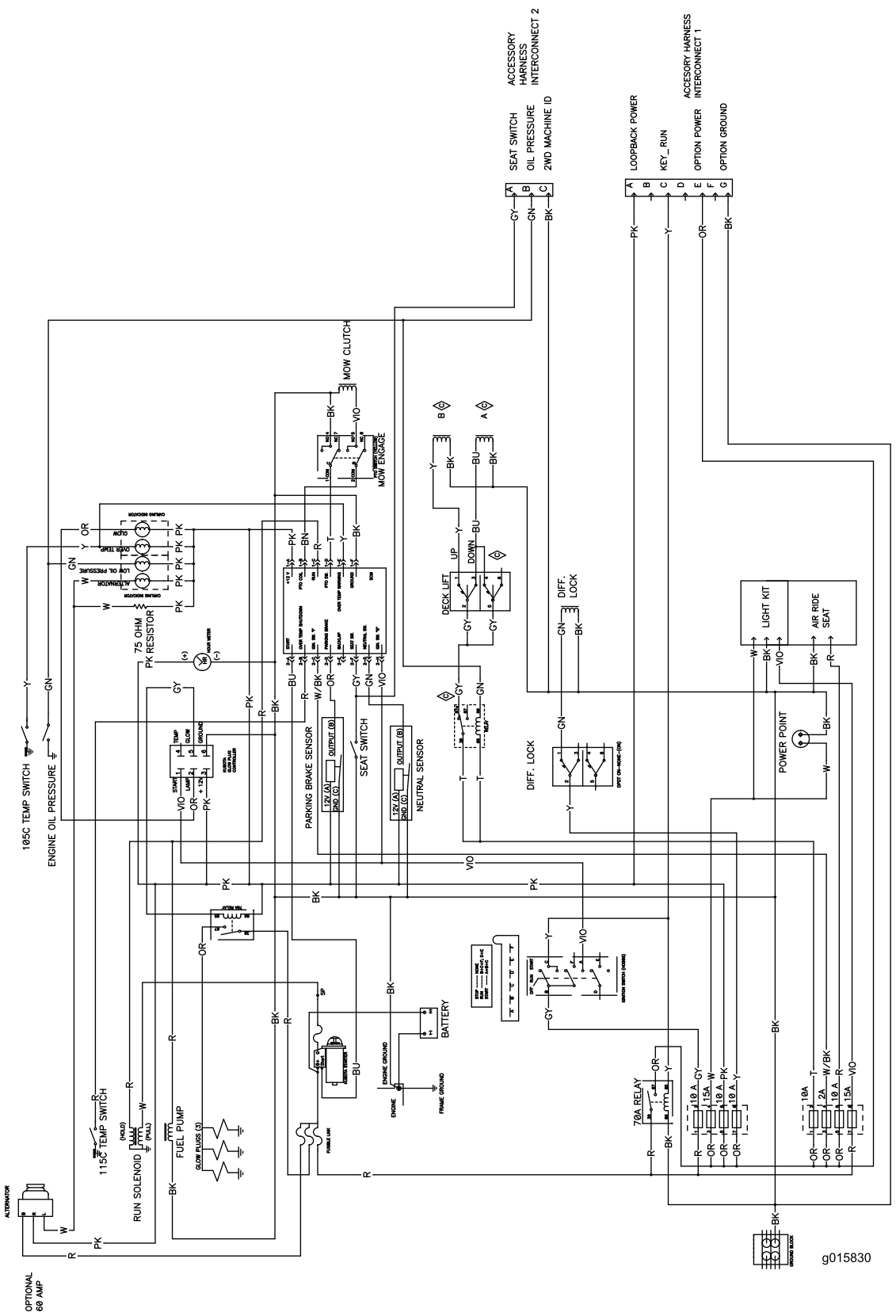

Electrical Schematic-Models 30534, 30535 & 30536 (Rev. C)

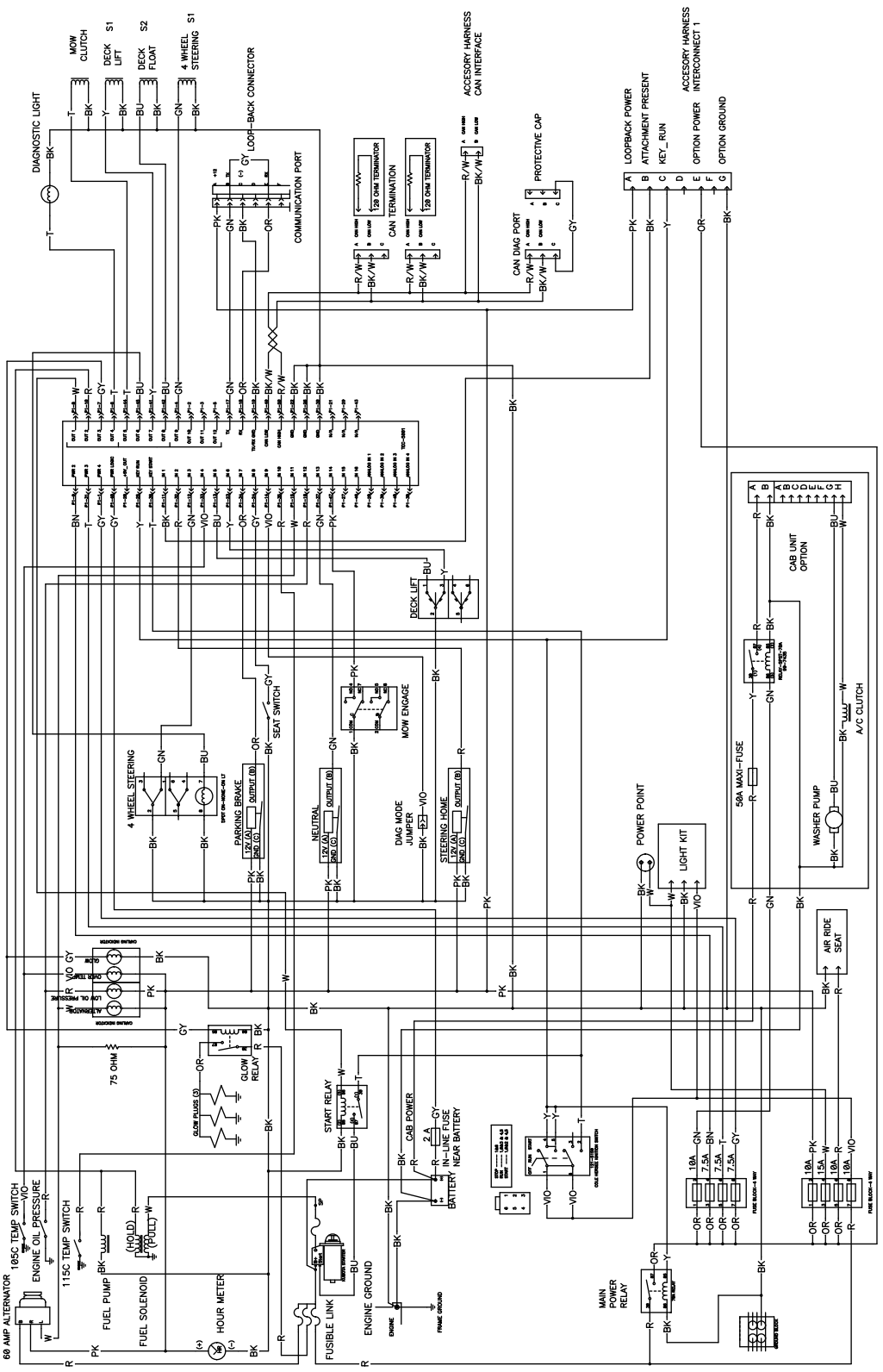

G018485

Electrical Schematic-Models 30537, 30538, 30539, 30540, 30541 & 30542 (Rev. A)

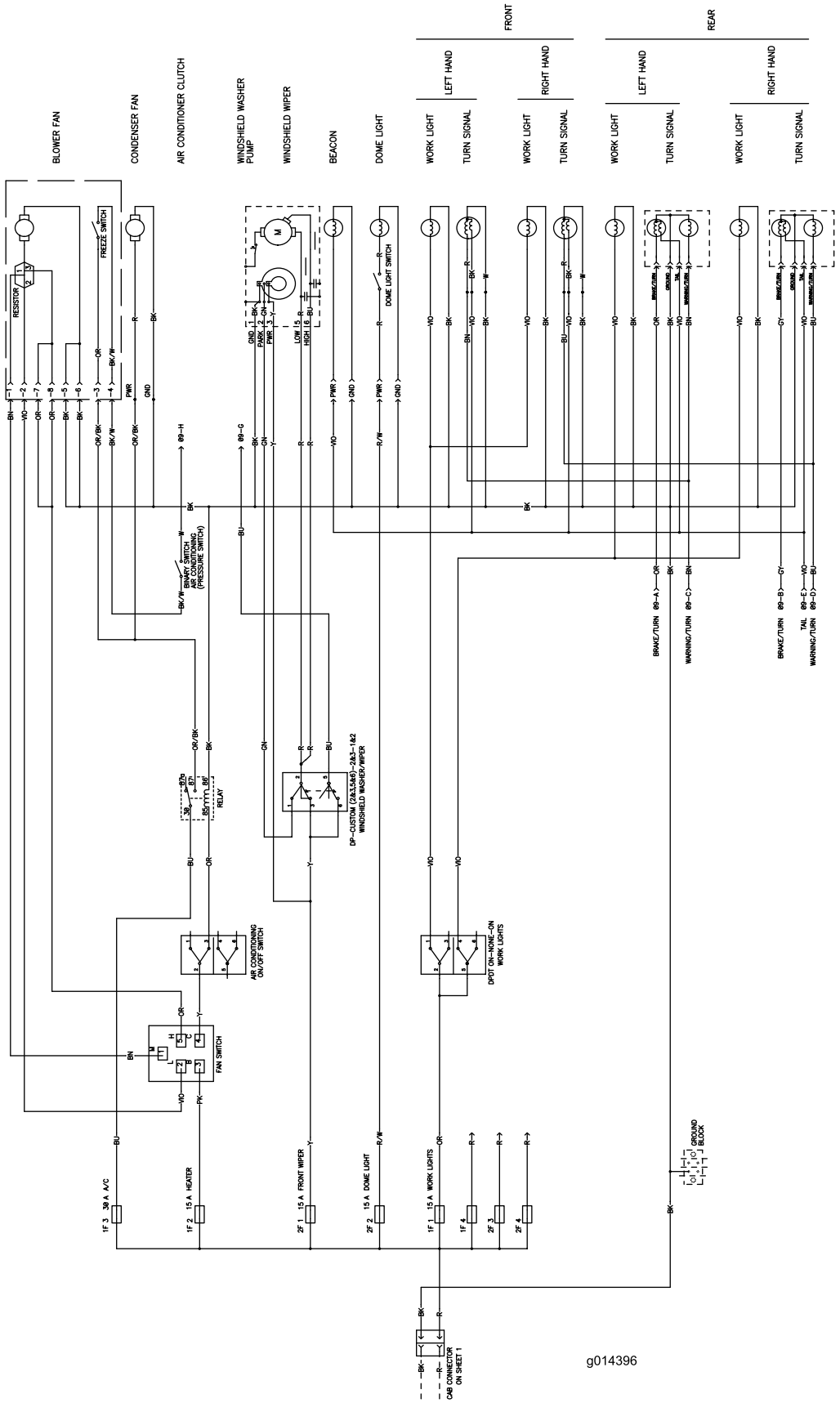

Electrical Schematic-Cab (Rev. 1)

Notes:

The Toro Total Coverage Guarantee

A Limited Warranty

Conditions and Products Covered

The Toro Company and its affiliate, Toro Warranty Company, pursuant to an agreement between them, jointly warrant your Toro Commercial product (“Product”) to be free from defects in materials or workmanship for two years or 1500 operational hours*, whichever occurs first. This warranty is applicable to all products with the exception of Aerators (refer to separate warranty statements for these products). Where a warrantable condition exists, we will repair the Product at no cost to you including diagnostics, labor, parts, and transportation. This warranty begins on the date the Product is delivered to the original retail purchaser.
* Product equipped with an hour meter.

Instructions for Obtaining Warranty Service

You are responsible for notifying the Commercial Products Distributor or Authorized Commercial Products Dealer from whom you purchased the Product as soon as you believe a warrantable condition exists. If you need help locating a Commercial Products Distributor or Authorized Dealer, or if you have questions regarding your warranty rights or responsibilities, you may contact us at:

Toro Commercial Products Service Department
Toro Warranty Company
8111 Lyndale Avenue South
Bloomington, MN 55420-1196

952–888–8801 or 800–952–2740
E-mail: commercial.warranty@toro.com

Owner Responsibilities

As the Product owner, you are responsible for required maintenance and adjustments stated in your *Operator's Manual*. Failure to perform required maintenance and adjustments can be grounds for disallowing a warranty claim.

Items and Conditions Not Covered

Not all product failures or malfunctions that occur during the warranty period are defects in materials or workmanship. This warranty does not cover the following:

- Product failures which result from the use of non-Toro replacement parts, or from installation and use of add-on, or modified non-Toro branded accessories and products. A separate warranty may be provided by the manufacturer of these items.
- Product failures which result from failure to perform recommended maintenance and/or adjustments. Failure to properly maintain your Toro product per the Recommended Maintenance listed in the *Operator’s Manual* can result in claims for warranty being denied.
- Product failures which result from operating the Product in an abusive, negligent, or reckless manner.
- Parts subject to consumption through use unless found to be defective. Examples of parts which are consumed, or used up, during normal Product operation include, but are not limited to, brake pads and linings, clutch linings, blades, reels, rollers and bearings (sealed or greasable), bed knives, spark plugs, castor wheels and bearings, tires, filters, belts, and certain sprayer components such as diaphragms, nozzles, and check valves, etc.
- Failures caused by outside influence. Conditions considered to be outside influence include, but are not limited to, weather, storage practices, contamination, use of unapproved fuels, coolants, lubricants, additives, fertilizers, water, or chemicals, etc.
- Failure or performance issues due to the use of fuels (e.g. gasoline, diesel, or biodiesel) that do not conform to their respective industry standards.
- Normal noise, vibration, wear and tear, and deterioration.
- Normal “wear and tear” includes, but is not limited to, damage to seats due to wear or abrasion, worn painted surfaces, scratched decals or windows, etc.

Parts

Parts scheduled for replacement as required maintenance are warranted for the period of time up to the scheduled replacement time for that part. Parts replaced under this warranty are covered for the duration of the original product warranty and become the property of Toro. Toro will make the final decision whether to repair any existing part or assembly or replace it. Toro may use remanufactured parts for warranty repairs.

Deep Cycle and Lithium-Ion Battery Warranty:

Deep cycle and Lithium-Ion batteries have a specified total number of kilowatt-hours they can deliver during their lifetime. Operating, recharging, and maintenance techniques can extend or reduce total battery life. As the batteries in this product are consumed, the amount of useful work between charging intervals will slowly decrease until the battery is completely worn out. Replacement of worn out batteries, due to normal consumption, is the responsibility of the product owner. Battery replacement may be required during the normal product warranty period at owner’s expense. Note: (Lithium-Ion battery only): A Lithium-Ion battery has a part only prorated warranty beginning year 3 through year 5 based on the time in service and kilowatt hours used. Refer to the *Operator's Manual* for additional information.

Maintenance is at Owner’s Expense

Engine tune-up, lubrication, cleaning and polishing, replacement of filters, coolant, and completing recommended maintenance are some of the normal services Toro products require that are at the owner’s expense.

General Conditions

Repair by an Authorized Toro Distributor or Dealer is your sole remedy under this warranty.

Neither The Toro Company nor Toro Warranty Company is liable for indirect, incidental or consequential damages in connection with the use of the Toro Products covered by this warranty, including any cost or expense of providing substitute equipment or service during reasonable periods of malfunction or non-use pending completion of repairs under this warranty. Except for the Emissions warranty referenced below, if applicable, there is no other express warranty. All implied warranties of merchantability and fitness for use are limited to the duration of this express warranty.

Some states do not allow exclusions of incidental or consequential damages, or limitations on how long an implied warranty lasts, so the above exclusions and limitations may not apply to you. This warranty gives you specific legal rights, and you may also have other rights which vary from state to state.

Note regarding engine warranty:

The Emissions Control System on your Product may be covered by a separate warranty meeting requirements established by the U.S. Environmental Protection Agency (EPA) and/or the California Air Resources Board (CARB). The hour limitations set forth above do not apply to the Emissions Control System Warranty. Refer to the Engine Emission Control Warranty Statement supplied with your product or contained in the engine manufacturer’s documentation for details

Countries Other than the United States or Canada

Customers who have purchased Toro products exported from the United States or Canada should contact their Toro Distributor (Dealer) to obtain guarantee policies for your country, province, or state. If for any reason you are dissatisfied with your Distributor's service or have difficulty obtaining guarantee information, contact the Toro importer.