Form No. 3373-659 Rev A

TORO®

Count on it.

Parts Catalog

# Groundsmaster® 360 4-Wheel Drive Multi-Purpose Machine

**Model No. 30537—Serial No. 312000301 and Up**

Register at www.Toro.com.
Original Instructions (EN)

*3373-659* A

# Ordering Replacement Parts

To order replacement parts, please supply the part number, the quantity, and the description of each part desired.

**Understanding Reference Numbers**

Each identified part in an illustration has a reference number. The reference number for a part also appears in the parts list, along with other information about the part.

This catalog uses two special reference number formats, one to indicate parts in a service assembly and another to indicate the quantity of a given part in an illustration.

**Service Assembly Reference Numbers**

Parts in service assemblies have reference numbers in the form a:b. The a represents the reference number of the entire service assembly and the b represents a sequential number unique to each part within the service assembly.

For example, a wheel assembly might be identified by reference number 6, the tire by 6:1, the valve by 6:2, and the wheel by 6:3. When you order the assembly identified by reference number 6, you receive all parts identified by reference numbers 6:1,6:2, and 6:3. However, you may also order any part individually. Reference numbers of this type appear in illustration and in parts lists.

**Reference Numbers Indicating Quantity**

In an illustration, if a reference number indicates more than one part, the reference number has the form nX y. The n represents the quantity of the part, the X is the multiplication symbol, and the y represents the reference number.

For example, in an illustration, the reference number 2X 37 means that two of the parts identified by reference number 37 are indicated.

# List of Abbreviations

**AR:** as required

**ASM:** assembly

**BBC:** blade brake control

**BHTF:** button head thread forming

**CARR:** carriage

**CCW:** counter clockwise

**CW:** clockwise

**DEG:** degrees

**DPA:** Dual Point Adjustment

**ECM:** electronic control module

**EXT:** external

**FH:** flat head

**GA:** gauge

**HD:** heavy-duty

**HF:** hex flange

**HH:** hex head

**HHF:** hex head flange

**HHFTF:** hex head flange thread forming

**HJ:** hex jam

**HLH:** hex lag head

**HOC:** height-of-cut

**HSBH:** hex socket button head

**HSFH:** hex socket flat head

**HSH:** hex socket head

**HWH:** hex washer head

**HWHTF:** hex washer head thread forming

**HYD:** hydraulic

**LH:** left hand

**LPG:** Liquid Propane Gas

**NI:** nylon insert

**NPTF:** national pipe thread fine

**PFH:** phillips flat head

**PPH:** phillips pan head

**PPHTF:** phillips pan head thread forming

**PRH:** phillips round head

**PTH:** phillips truss head

**PTO:** power-take-off

**RH:** right hand

**ROPS:** roll-over protection system

**RRB:** rear roller brush

**SFH:** slotted fillister head

**SHH:** slotted hex head

**SHWH:** slotted hex washer head

**SPH:** slotted pan head

**SQH:** square head

**SRH:** slotted round head

**STD:** standard

**TAP:** self tapping

**TTH:** torx truss head

# Contents

Frame and Axle Assembly . . . 5
Lift Shaft and Linkage Assembly . . . 6
Hydraulic Cylinder Assembly No. 110-9834 . . . 7
Platform and Roll-Over Protection System Assembly . . . 8
Front Axle and Tie Rod Assembly . . . 9
Front Axle Assembly No. 119-1447 . . . 11
Hydraulic Cylinder Assembly No. 115-0060 . . . 12
Rear Steering Assembly . . . 13
4 Wheel Drive Steering Assembly . . . 15
Front Cover Assembly . . . 16
Engine Component Assembly . . . 17
Transmission Component Assembly . . . 18
Charge Pump Housing Assembly Transmission Assembly No. 120-9140 . . . 19
Center Section Assembly Transmission Assembly No. 120-9140 . . . 20
Gear Case and Clutch Assembly Transmission Assembly No. 120-9140 . . . 21
Driveshaft Assembly No. 110-3575 . . . 22
Radiator Component Assembly . . . 23
Radiator and Cooler Assembly . . . 24
Muffler Assembly . . . 25
Battery and Fuel Delivery Assembly . . . 26
Air Cleaner Assembly . . . 27
Fan Spacer and Thermoswitch Assembly . . . 28
Engine Assembly . . . 29
Steering Column Assembly . . . 30
Steering Column Assembly No. 117-3371 . . . 31
Steering Valve Assembly No. 117-3265 . . . 32
Fuel Tank and Control Panel Component Assembly . . . 33
Fuel Tank Assembly No. 120-0255 . . . 34
Seat Plate Assembly . . . 35
4 Wheel Drive Module Control and Relay Assembly . . . 36
Seat Assembly . . . 37
Seat Assembly No. 107-2286 . . . 38
Seat Platform Assembly . . . 39
Brake Pedal Assembly . . . 40
Wheel and Brake Assembly . . . 41
Left Hand Brake Assembly No. 120-0235 . . . 42
Right Hand Brake Assembly No. 120-0233 . . . 43
4 Wheel Drive Hydraulic Motor and Fitting Assembly . . . 44
Hydraulic Motor Assembly No. 117-3284 (CCW) . . . 45
Hydraulic Motor Assembly No. 117-3285 (CW) . . . 46
Neutral and Traction Pedal Assembly . . . 47
Traction Pump Linkage Assembly . . . 48
Link Assembly No. 112-5099 . . . 49
Hood Assembly . . . 50
Storage Compartment Assembly . . . 51
Deck Lift Valve and Hydraulic Fitting Assembly . . . 52
Hydraulic Gear Pump Assembly No. 115-0375 . . . 54
Deck Lift Valve Assembly No. 115-0356 . . . 55
Hydraulic Tube and Hose Assembly . . . 56
Hydraulic Valve Assembly . . . 58
Steering Selector Valve Assembly No. 115-0280 . . . 59
Cross-Trax Traction Valve Assembly No. 117-2247 . . . 60
4 Wheel Drive Hydraulic Hose Assembly . . . 61
Electrical Assembly . . . 62

**© 2012—The Toro® Company**
**8111 Lyndale Avenue South**
**Bloomington, MN 55420**



**Contact us at www.Toro.com.**
**Printed in the USA.**
**All Rights Reserved**

# Contents (continued)

Deck Belt and Pulley Assembly . . . 63
Deck Decal Assembly No. 108-9901 . . . 64
Spindle Assembly No. 119-4778 . . . 65
High Spindle Assembly No. 117-9233 . . . 66
Double Spindle Assembly No. 117-9234 . . . 67
Roller and Baffle Assembly . . . 68
Blade Assembly . . . 69
Belt Cover, Gearbox and Baffle Assembly . . . 70
Rubber Deflector Assembly No. 108-2792 . . . 71
Gearbox Assembly No. 117-9245-03 . . . 72
Adjustment Link and Bumper Assembly . . . 73
Crankcase Assembly . . . 74
Oil Pan Assembly . . . 75
Cylinder Head Assembly . . . 76
Gear Case Assembly . . . 77
Cylinder Head Cover Assembly . . . 78
Dipstick and Guide Assembly . . . 79
Main Bearing Case Assembly . . . 80
Cam Shaft and Idle Gear Assembly . . . 81
Piston and Crankshaft Assembly . . . 82
Flywheel Assembly . . . 83
Fuel Camshaft and Governor Shaft Assembly . . . 84
Idle Apparatus Assembly . . . 85
Injection Pump Assembly . . . 86
Governor Assembly . . . 87
Speed Control Plate Assembly . . . 88
Nozzle Holder and Glow Plug Assembly . . . 89
Nozzle Holder Component Assembly . . . 90
Alternator and Pulley Assembly . . . 91
Alternator Components . . . 92
Starter Assembly . . . 93
Starter (Component Part) Assembly . . . 94
Water Flange Assembly . . . 95
Water Pump Assembly . . . 96
Valve and Rocker Arm Assembly . . . 97
Intake and Exhaust Manifold Assembly . . . 98
Muffler Gasket and Operator Manual . . . 99
Attachments and Accessories . . . 100

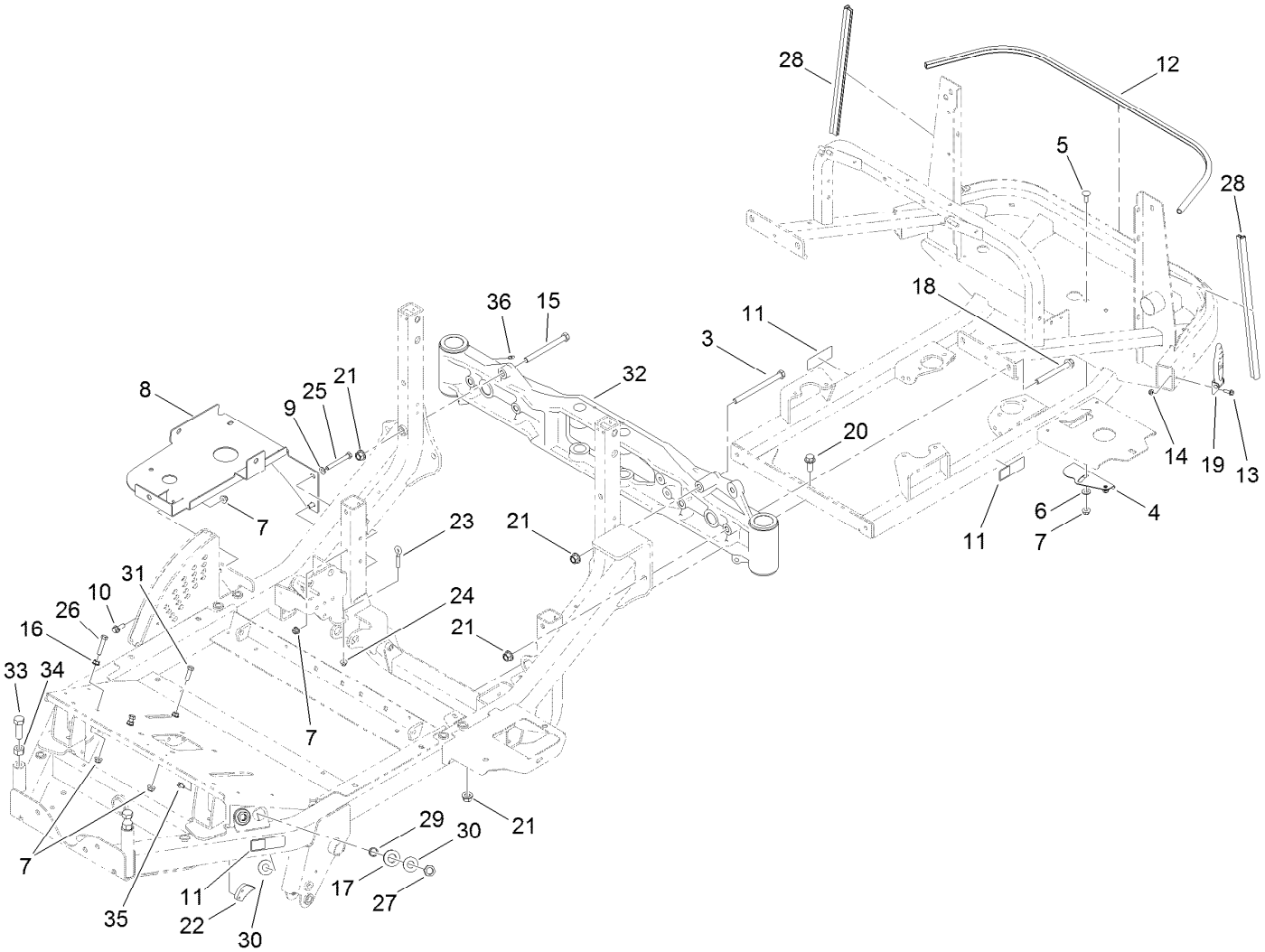


# Frame and Axle Assembly

| Ref. | Part Number | Qty. | Description |
|---|---|---|---|
| 3 | 325-33 | 1 | Screw-HH |
| 4 | 117-3190 | 1 | Cover-Lower |
| 5 | 3231-22 | 2 | Screw-CARR |
| 6 | 66-2920 | 2 | Washer-Friction |
| 7 | 104-8301 | 8 | Nut-Flange, NI |
| 8 | 117-3385-03 | 1 | Bracket-Tank, HYD |
| 9 | 3256-24 | 2 | Washer-Flat |
| 10 | 3234-24 | 1 | Screw-HHF |
| 11 | 106-9206 | 4 | Decal-Torque, Wheel |
| 12 | 117-3311 | 1 | Seal-Bulb |
| 13 | 3234-4 | 2 | Screw-HHF |
| 14 | 104-7201 | 2 | Nut-HF |
| 15 | 325-22 | 1 | Screw-HH |
| 16 | 3290-357 | 3 | Nut-HHF, Whiz |
| 17 | 240-4 | 2 | Grommet-Rubber |
| 18 | 117-3176 | 4 | Screw-HHF |
| 19 | 103-2898 | 2 | Latch-Rubber |

| Ref. | Part Number | Qty. | Description |
|---|---|---|---|
| 20 | 3234-38 | 3 | Screw-HHF |
| 21 | 99-5107 | 9 | Nut-Lock |
| 22 | 99-7214 | 1 | Pawl-Brake |
| 23 | 1-303238 | 1 | Eyebolt-Thread, RH |
| 24 | 104-8300 | 1 | Nut-Flange, NI |
| 25 | 323-14 | 2 | Screw-HH |
| 26 | 323-53 | 2 | Screw-HH |
| 27 | 340-70 | 2 | Nut-Lock |
| 28 | 107-2269 | 2 | Seal-Bulb |
| 29 | 69-8970 | 2 | Spacer |
| 30 | 69-8940 | 4 | Washer |
| 31 | 323-7 | 1 | Screw-HH |
| 32 | 119-1448 | 1 | Rear Axle ASM |
| 33 | 327-6 | 2 | Screw-HH |
| 34 | 3217-11 | 2 | Nut-Hex |
| 35 | 3234-13 | 2 | Screw-HHF |
| 36 | 302-5 | 2 | Fitting-Grease |

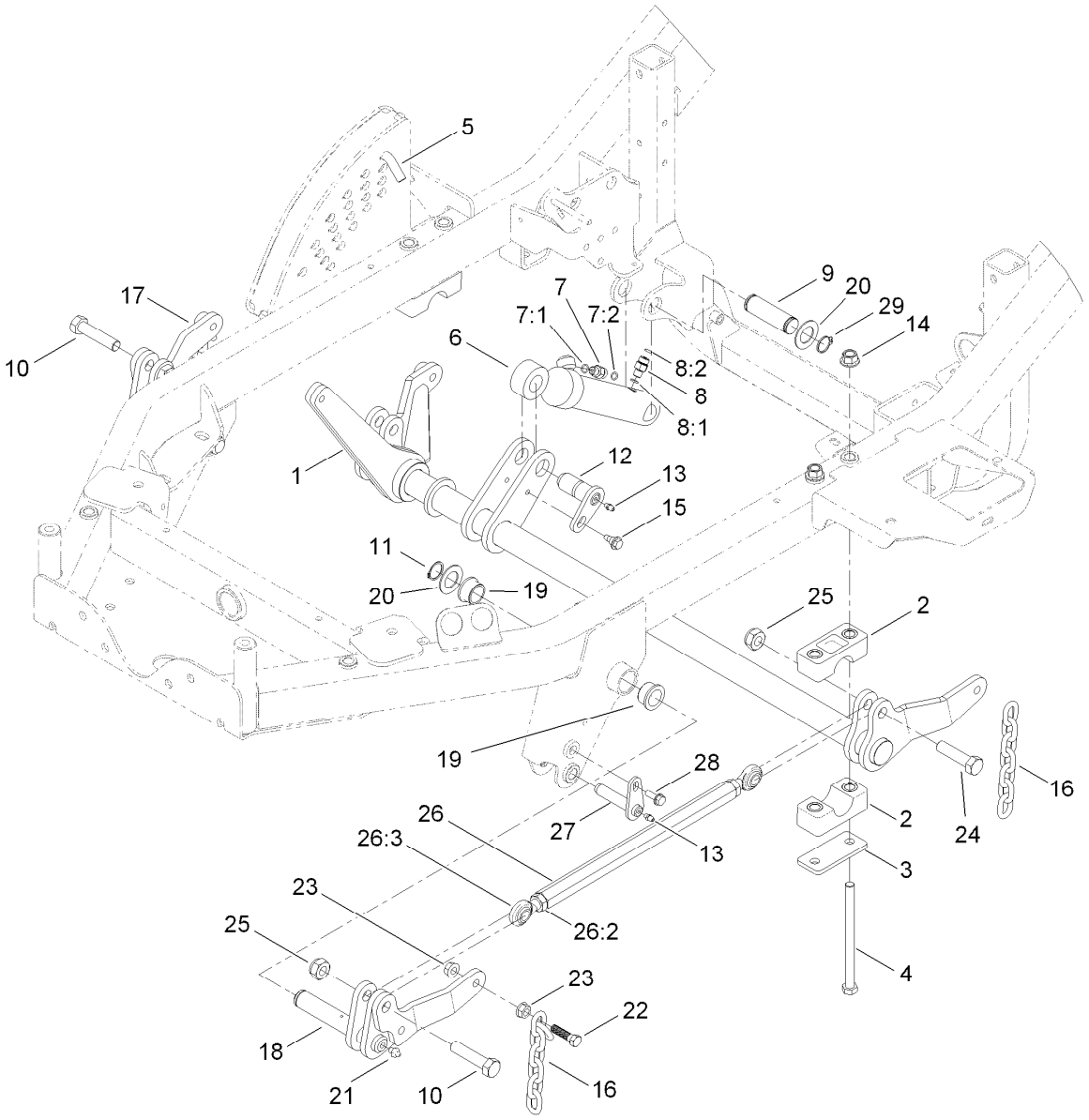


# Lift Shaft and Linkage Assembly

| Ref. | Part Number | Qty. | Description |
|---|---|---|---|
| 1 | 115-0190-03 | 1 | Lift Shaft ASM |
| 2 | 115-0491 | 4 | Cap-Bearing |
| 3 | 117-2903 | 2 | Plate-Bearing |
| 4 | 325-37 | 4 | Screw-HH |
| 5 | 112-9544 | 1 | Pin-HOC |
| 6 | 110-9834 | 1 | HYD Cylinder ASM |
| 7 | 340-92 | 1 | Fitting-HYD, Straight |
| 7:1 | 237-78 | 1 | O-Ring |
| 7:2 | 237-21 | 1 | O-Ring |
| 8 | 95-1639 | 1 | Fitting-HYD |
| 8:1 | 237-78 | 1 | O-Ring |
| 8:2 | 237-21 | 1 | O-Ring |
| 9 | 115-0183 | 1 | Shaft-Cylinder, Lift |
| 10 | 327-8 | 2 | Screw-HH |
| 11 | 32151-29 | 2 | Ring-Retaining |
| 12 | 98-2654 | 1 | Pivot Pin ASM |
| 13 | 302-5 | 3 | Fitting-Grease |
| 14 | 99-5107 | 4 | Nut-Lock |

| Ref. | Part Number | Qty. | Description |
|---|---|---|---|
| 15 | 99-5105 | 1 | Bolt-Shoulder |
| 16 | 119-1385 | 4 | Chain-HOC |
| 17 | 119-1380-03 | 1 | RH Lift ASM |
| 18 | 119-1383-03 | 1 | LH Lift ASM |
| 19 | 114-5680 | 4 | Bushing-Flange |
| 20 | 69-9010 | 4 | Washer |
| 21 | 302-2 | 2 | Fitting-Grease |
| 22 | 103-1898 | 4 | Screw-HH |
| 23 | 32128-37 | 8 | Nut-HF |
| 24 | 327-7 | 2 | Screw-HH |
| 25 | 3296-61 | 4 | Nut-Lock |
| 26 | 114-4059 | 2 | Link ASM |
| 26:2 | 3220-6 | 2 | Nut-Jam |
| 26:3 | 1-633029 | 2 | Balljoint-Spherical |
| 27 | 112-1602 | 2 | Pin-Retainer |
| 28 | 32144-41 | 2 | Screw-Taptite |
| 29 | 32151-36 | 2 | Ring-Retaining |

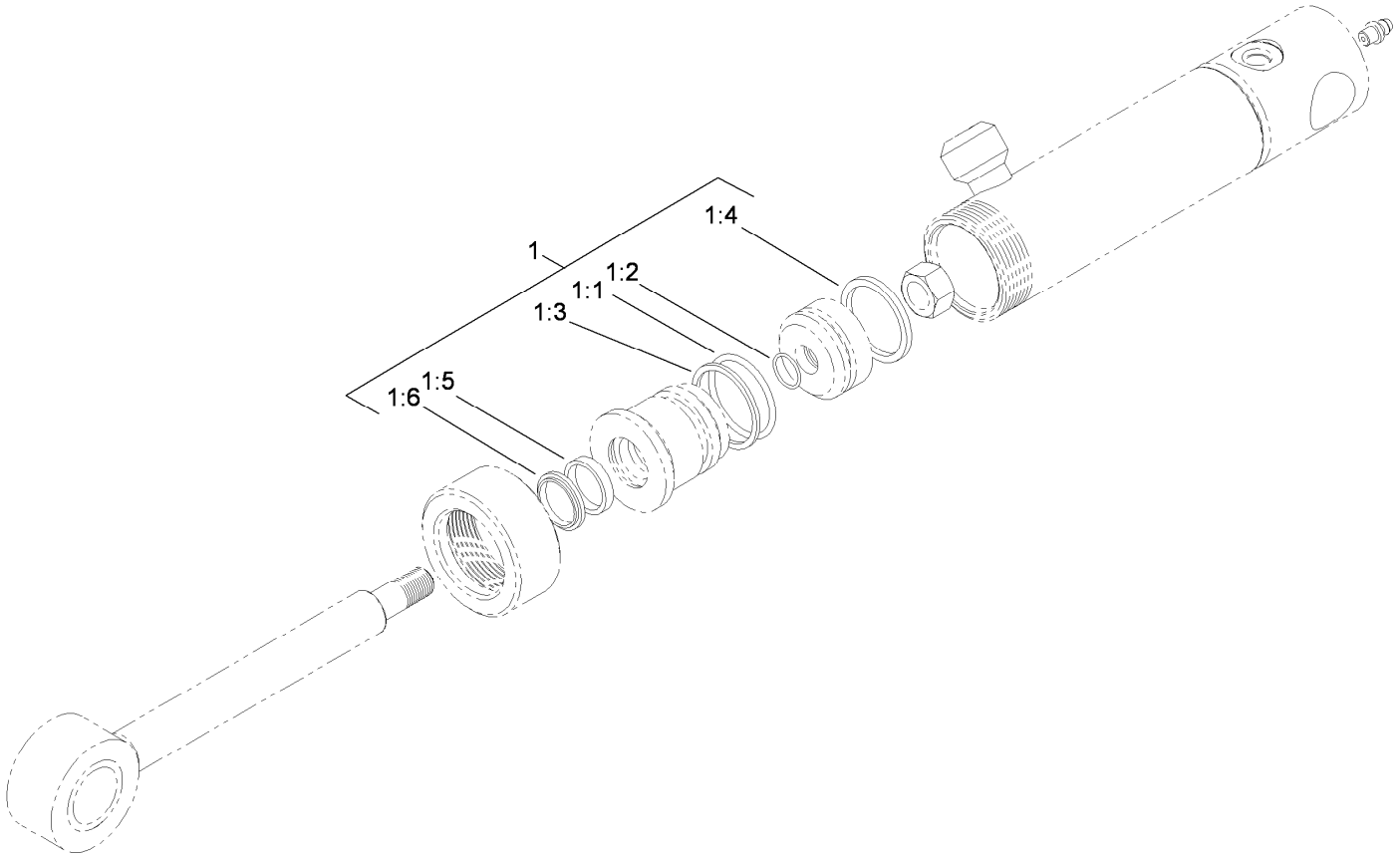


# Hydraulic Cylinder Assembly No. 110-9834

| *Ref.* | *Part Number* | *Qty.* | *Description* |
|---|---|---|---|
| 1 | 112-6353 | 1 | Seal Kit |
| 1:1 | | 1 | O-Ring ● |
| 1:2 | | 1 | O-Ring ● |
| 1:3 | | 1 | Backup ● |
| 1:4 | | 1 | Seal-Bp ● |
| 1:5 | | 1 | Seal-Rod ● |
| 1:6 | | 1 | Seal-Dust ● |

● Not serviced separately

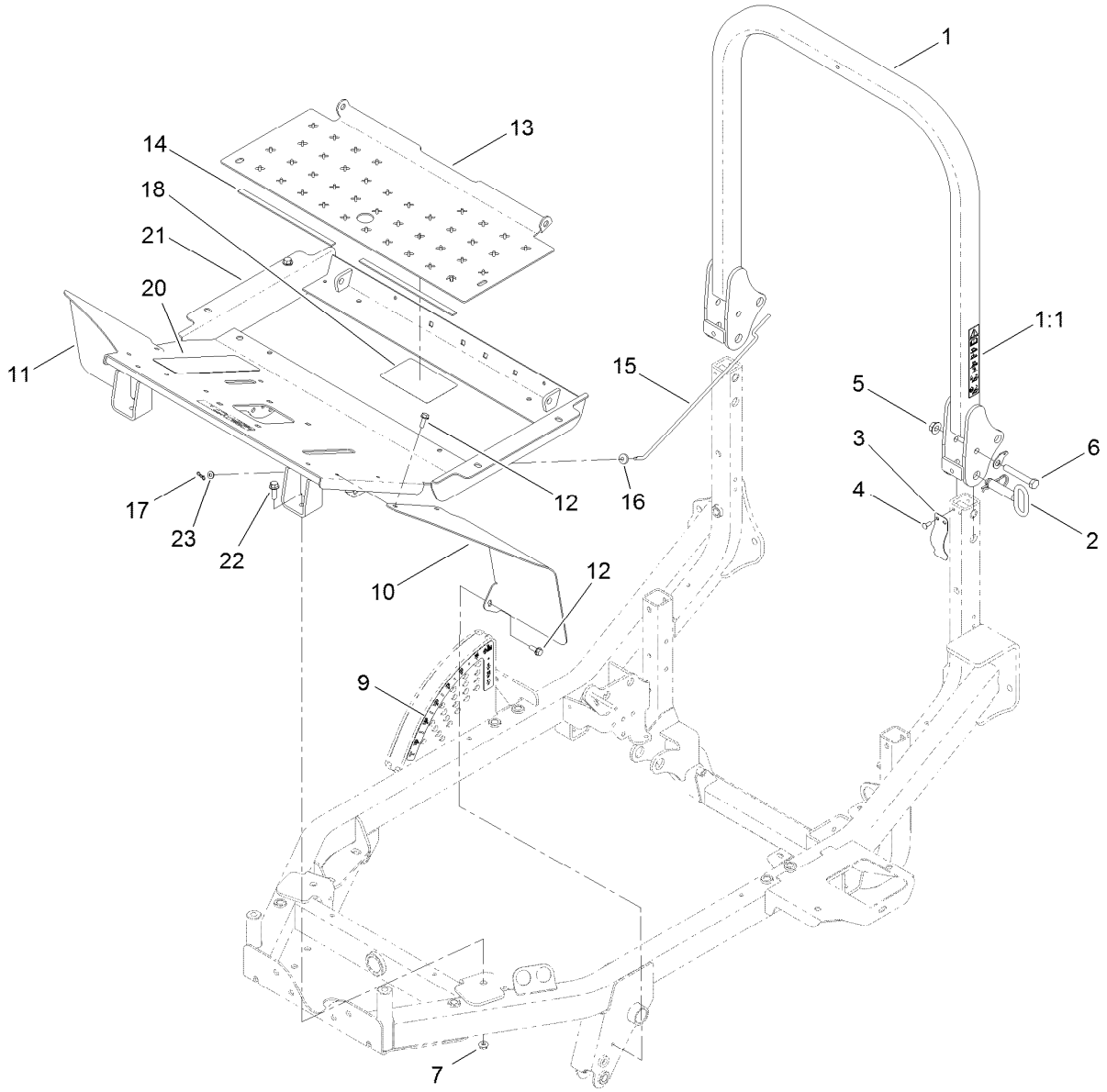


# Platform and Roll-Over Protection System Assembly

| Ref. | Part Number | Qty. | Description |
|---|---|---|---|
| 1 | 120-0253 | 1 | ROPS ASM |
| 1:1 | 117-3272 | 1 | Decal-Danger, ROPS |
| 2 | 103-4553 | 2 | ROPS Fold Pin ASM |
| 3 | 110-5696 | 2 | Spring-Leaf |
| 4 | 3290-412 | 4 | Rivet |
| 5 | 32128-23 | 2 | Nut-HF |
| 6 | 112-7264 | 2 | Screw-HH |
| 7 | 104-8301 | 2 | Nut-Flange, NI |
| 9 | 115-0492 | 1 | Decal-HOC |
| 10 | 117-3203-03 | 1 | Fender-Front, LH |
| 11 | 117-3202-03 | 1 | Fender-Front, RH |

| Ref. | Part Number | Qty. | Description |
|---|---|---|---|
| 12 | 32144-41 | 6 | Screw-Taptite |
| 13 | 117-3204-03 | 1 | Plate-Floor |
| 14 | 115-8827 | 2 | Foam-Strip |
| 15 | 110-9847 | 1 | Rod-Prop |
| 16 | 237-141 | 1 | Grommet-Rubber |
| 17 | 119-1414 | 1 | Pin-Cotter, Locking |
| 18 | 112-1461 | 1 | Decal-Routing, Belt |
| 20 | 71-0440 | 1 | Abrasive-Pedal |
| 21 | 119-1398-01 | 1 | Platform ASM |
| 22 | 3234-24 | 4 | Screw-HHF |
| 23 | 3256-22 | 1 | Washer-Flat |

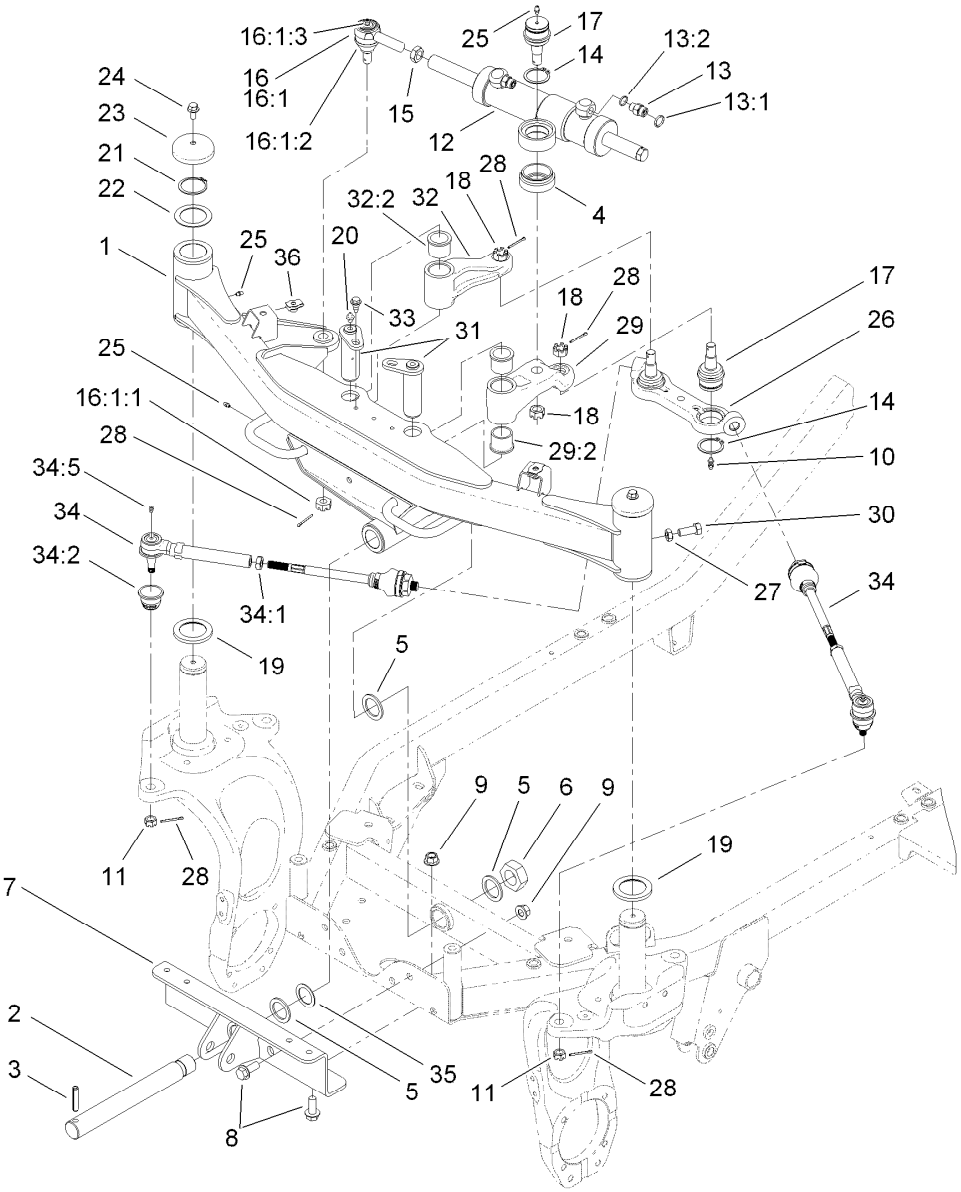


# Front Axle and Tie Rod Assembly

| Ref. | Part Number | Qty. | Description |
|---|---|---|---|
| 1 | 119-1447 | 1 | Front Axle ASM |
| 2 | 119-1376 | 1 | Shaft-Pivot |
| 3 | 32121-110 | 1 | Pin-Roll, Slotted |
| 4 | 120-0238 | 1 | Spacer-Cylinder |
| 5 | 98-1452 | 3 | Washer-Thrust |
| 6 | 3296-68 | 1 | Nut-Lock, NI |
| 7 | 117-2920-03 | 1 | Axle Support ASM |
| 8 | 3234-38 | 6 | Screw-HHF |
| 9 | 99-5107 | 6 | Nut-Lock |
| 10 | 302-60 | 2 | Fitting-Grease |
| 11 | 32136-3 | 2 | Nut-SHH |
| 12 | 115-0060 | 1 | HYD Cylinder ASM |
| 13 | 340-2 | 2 | Fitting-HYD, Straight |
| 13:1 | 237-22 | 1 | O-Ring |
| 13:2 | 237-42 | 1 | O-Ring |
| 14 | 32151-104 | 3 | Ring-Retaining, External |
| 15 | 84-5300 | 1 | Nut-Jam |
| 16 | 71-4740-03 | 1 | End-Rod, Tie |

| Ref. | Part Number | Qty. | Description |
|---|---|---|---|
| 16:1 | | 1 | End-Rod, Tie (RH) ● |
| 16:1:1 | 105-7941 | 1 | Nut-Hex, Slotted |
| 16:1:2 | 105-7835 | 1 | Seal |
| 16:1:3 | 302-5 | 1 | Fitting-Grease |
| 17 | 106-6774 | 3 | Joint-Ball |
| 18 | 32136-2 | 3 | Nut-SHH |
| 19 | 100-2508 | 2 | Washer-Thrust |
| 20 | 302-2 | 2 | Fitting-Grease |
| 21 | 100-4196 | 2 | Ring-Retaining |
| 22 | 115-0169 | 2 | Washer-Thrust |
| 23 | 100-3362 | 2 | Cap-Spindle |
| 24 | 3234-12 | 2 | Screw-HHF |
| 25 | 302-5 | 4 | Fitting-Grease |
| 26 | 117-2986 | 1 | Centerlink |
| 27 | 3218-5 | 2 | Nut-Jam |
| 28 | 3272-12 | 6 | Pin-Cotter |
| 29 | 120-0391 | 1 | Front LH Arm ASM |
| 29:2 | 94-8947 | 2 | Bushing-Flange |

● Not serviced separately

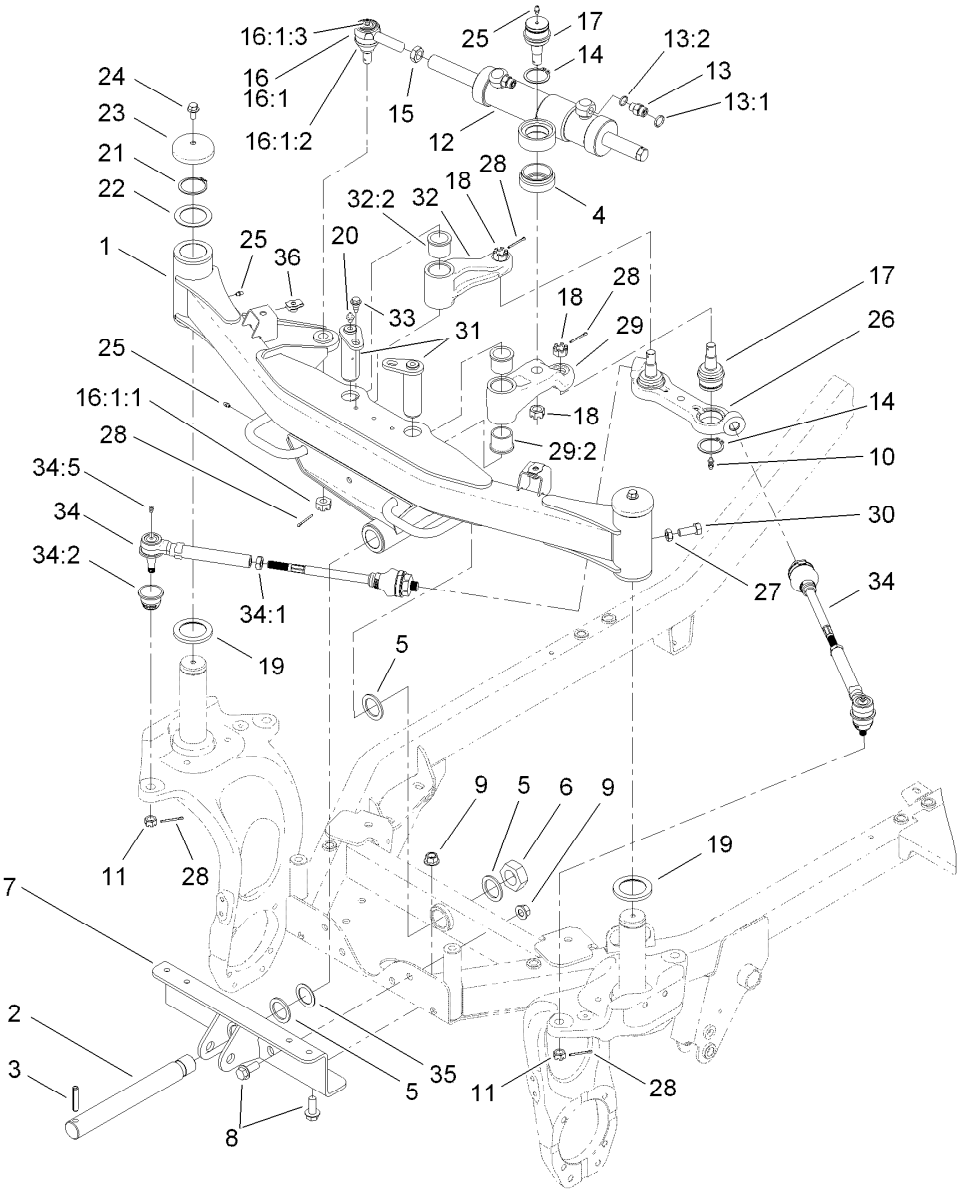


# Front Axle and Tie Rod Assembly (continued)

| Ref. | Part Number | Qty. | Description |
|---|---|---|---|
| 30 | 325-6 | 2 | Screw-HH |
| 31 | 117-3167 | 2 | Front Pin ASM |
| 32 | 120-0390 | 1 | Front RH Arm ASM |
| 32:2 | 94-8947 | 2 | Bushing-Flange |
| 33 | 99-5105 | 2 | Bolt-Shoulder |
| 34 | 117-2983 | 2 | Rod-Tie, Front |

| Ref. | Part Number | Qty. | Description |
|---|---|---|---|
| 34:1 | 42-9650 | 1 | Nut-Hex, Jam |
| 34:2 | 117-3287 | 1 | Dust Boot |
| 34:5 | 302-5 | 1 | Fitting-Grease |
| 35 | 93-4628 | 1 | Washer |
| 36 | 105-4886 | 2 | Nut-Tinnerman |

● Not serviced separately

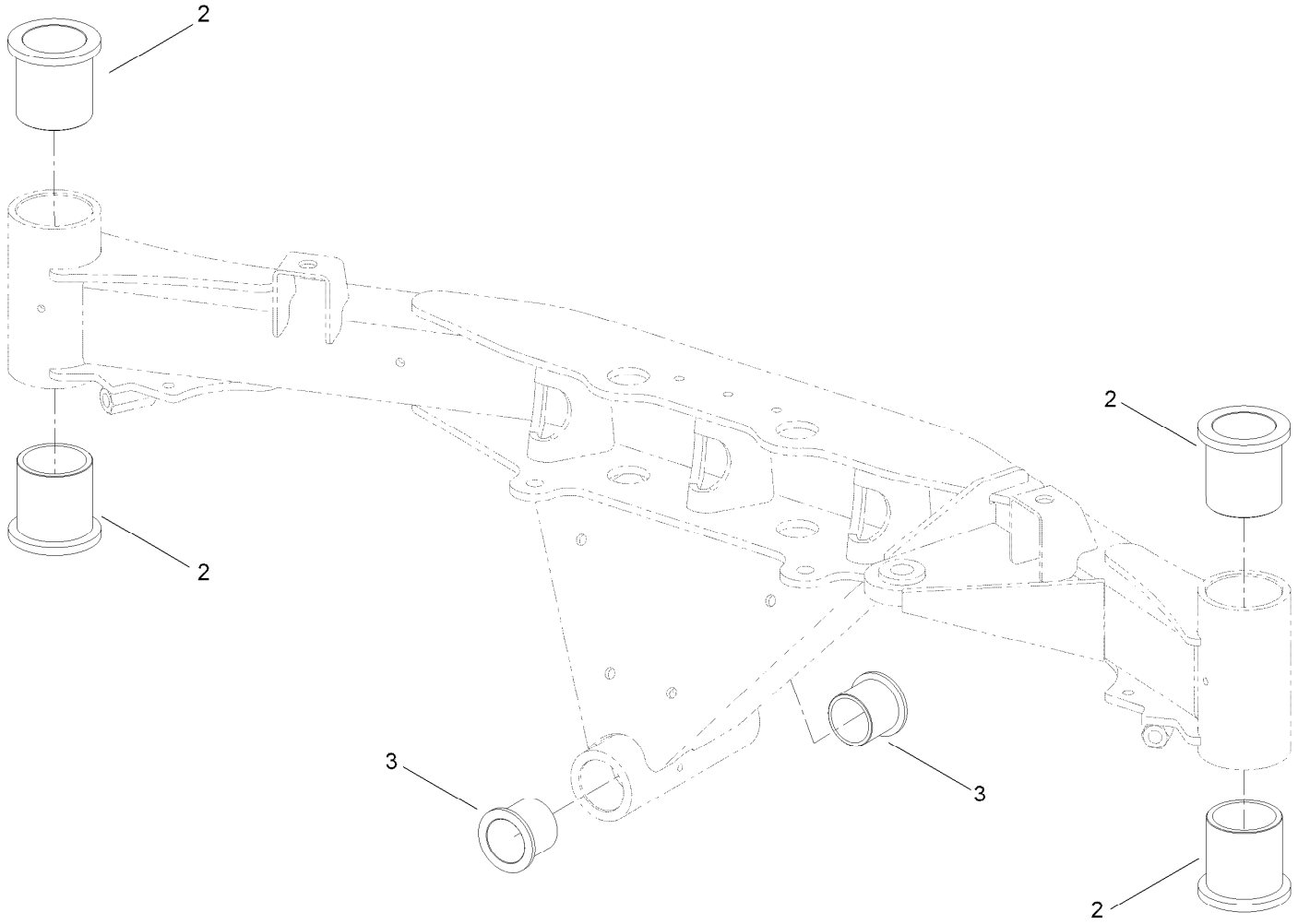


# Front Axle Assembly No. 119-1447

| *Ref.* | *Part Number* | *Qty.* | *Description* |
|---|---|---|---|
| 2 | 100-2506 | 4 | Bushing-Castor |
| 3 | 69-6470 | 2 | Bushing-Castor |

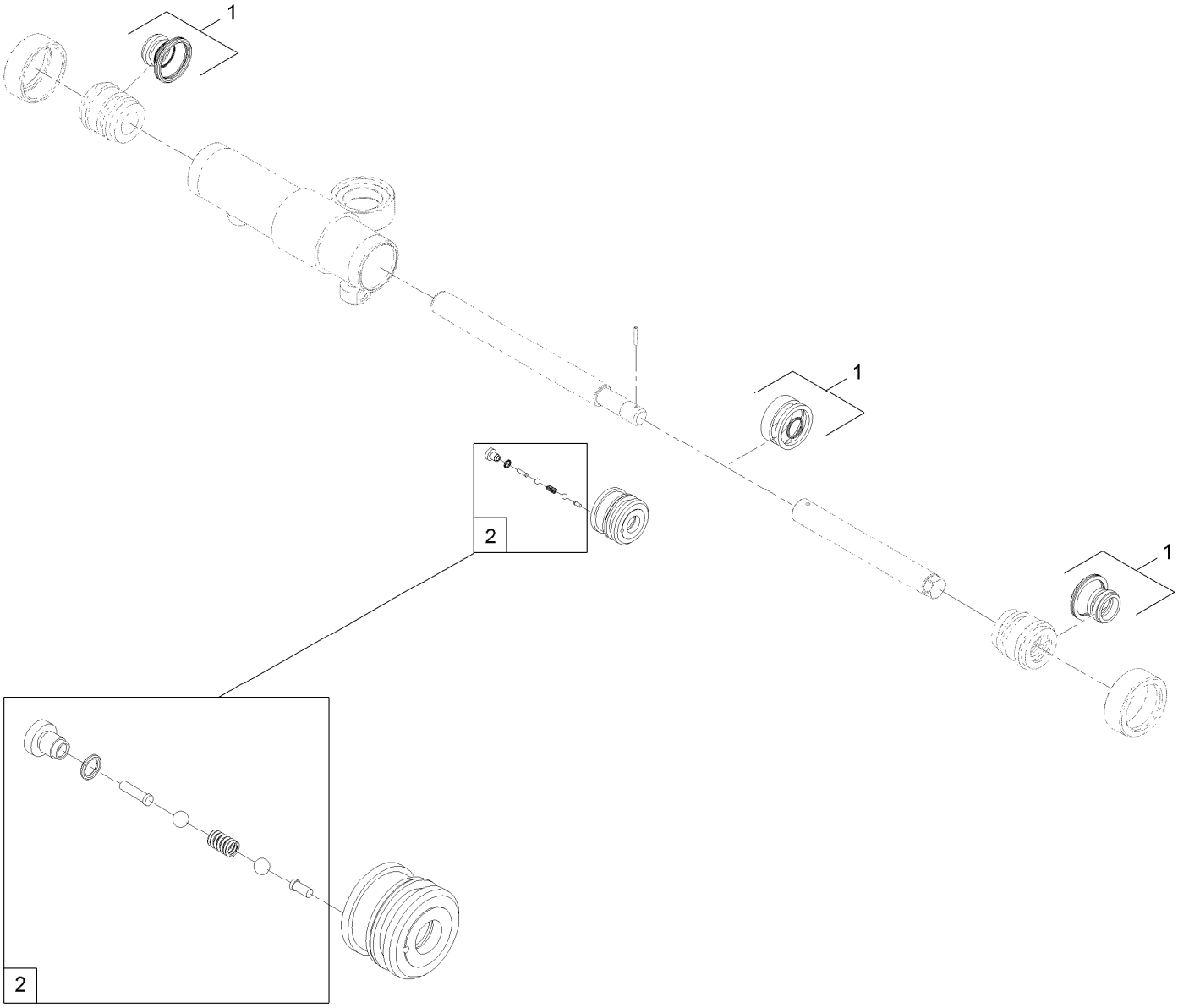


# Hydraulic Cylinder Assembly No. 115-0060

| *Ref.* | *Part Number* | *Qty.* | *Description* |
|---|---|---|---|
| 1 | 120-2557 | 1 | Seal Kit |
| 2 | 120-2556 | 1 | Valve-Check, Rephasing |

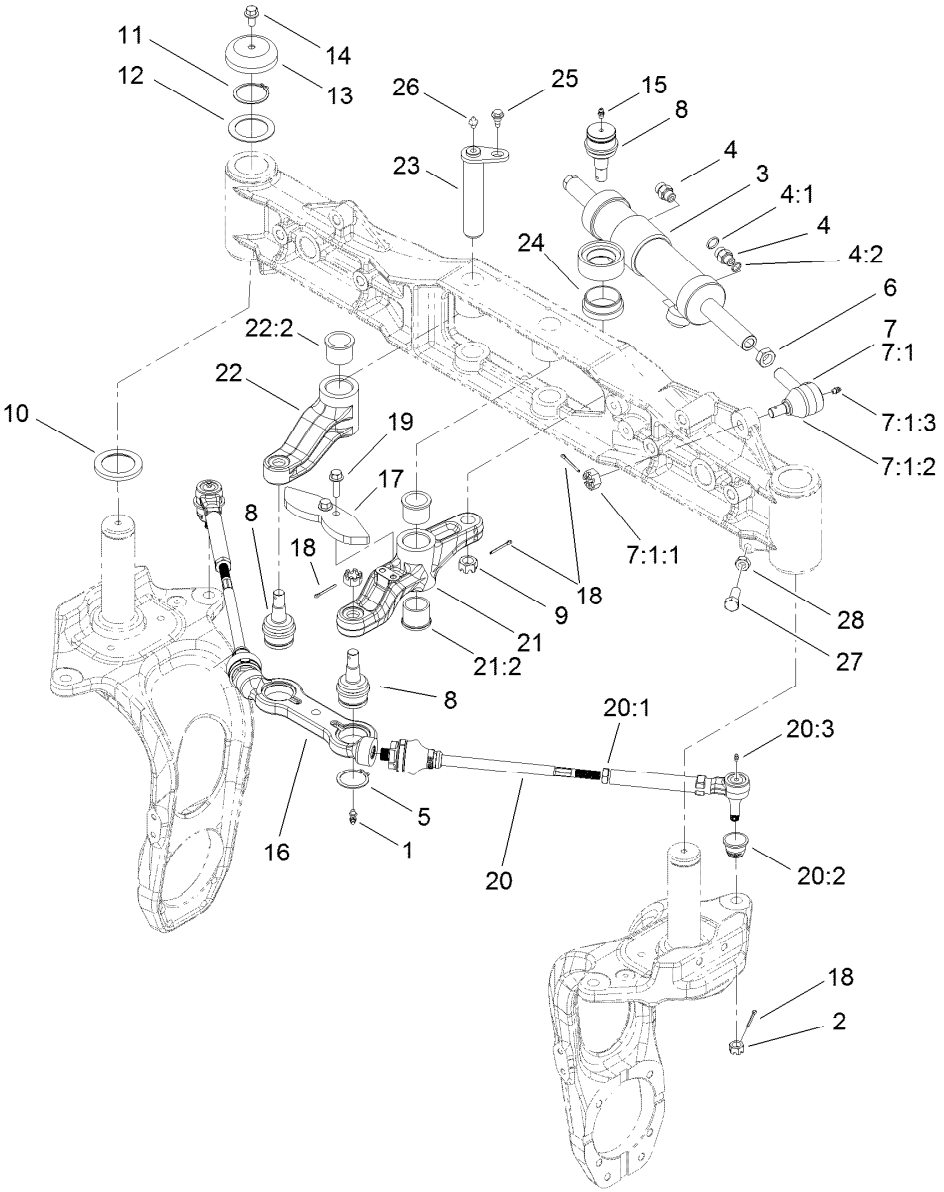


# Rear Steering Assembly

| Ref. | Part Number | Qty. | Description |
|---|---|---|---|
| 1 | 302-60 | 2 | Fitting-Grease |
| 2 | 32136-3 | 2 | Nut-SHH |
| 3 | 115-0060 | 1 | HYD Cylinder ASM |
| 4 | 340-2 | 2 | Fitting-HYD, Straight |
| 4:1 | 237-22 | 1 | O-Ring |
| 4:2 | 237-42 | 1 | O-Ring |
| 5 | 32151-104 | 3 | Ring-Retaining, External |
| 6 | 84-5300 | 1 | Nut-Jam |
| 7 | 71-4740-03 | 1 | End-Rod, Tie |
| 7:1 | | 1 | End-Rod, Tie (RH) ● |
| 7:1:1 | 105-7941 | 1 | Nut-Hex, Slotted |
| 7:1:2 | 105-7835 | 1 | Seal |
| 7:1:3 | 302-5 | 1 | Fitting-Grease |
| 8 | 106-6774 | 3 | Joint-Ball |
| 9 | 32136-2 | 3 | Nut-SHH |
| 10 | 100-2508 | 2 | Washer-Thrust |
| 11 | 100-4196 | 2 | Ring-Retaining |
| 12 | 115-0169 | 2 | Washer-Thrust |

| Ref. | Part Number | Qty. | Description |
|---|---|---|---|
| 13 | 100-3362 | 2 | Cap-Spindle |
| 14 | 3234-12 | 2 | Screw-HHF |
| 15 | 302-5 | 1 | Fitting-Grease |
| 16 | 117-2986 | 1 | Centerlink |
| 17 | 117-3376-03 | 1 | Plate-Cam, Pittman |
| 18 | 3272-12 | 6 | Pin-Cotter |
| 19 | 3234-24 | 2 | Screw-HHF |
| 20 | 117-2984 | 2 | Rod-Tie, Rear |
| 20:1 | 42-9650 | 1 | Nut-Hex, Jam |
| 20:2 | 117-3287 | 1 | Dust Boot |
| 20:3 | 302-5 | 1 | Fitting-Grease |
| 21 | 120-0393 | 1 | Rear LH Arm ASM |
| 21:2 | 94-8947 | 2 | Bushing-Flange |
| 22 | 120-0392 | 1 | Rear RH Arm ASM |
| 22:2 | 94-8947 | 2 | Bushing-Flange |
| 23 | 117-3137 | 2 | Pin ASM |
| 24 | 120-0238 | 1 | Spacer-Cylinder |
| 25 | 99-5105 | 2 | Bolt-Shoulder |

● Not serviced separately

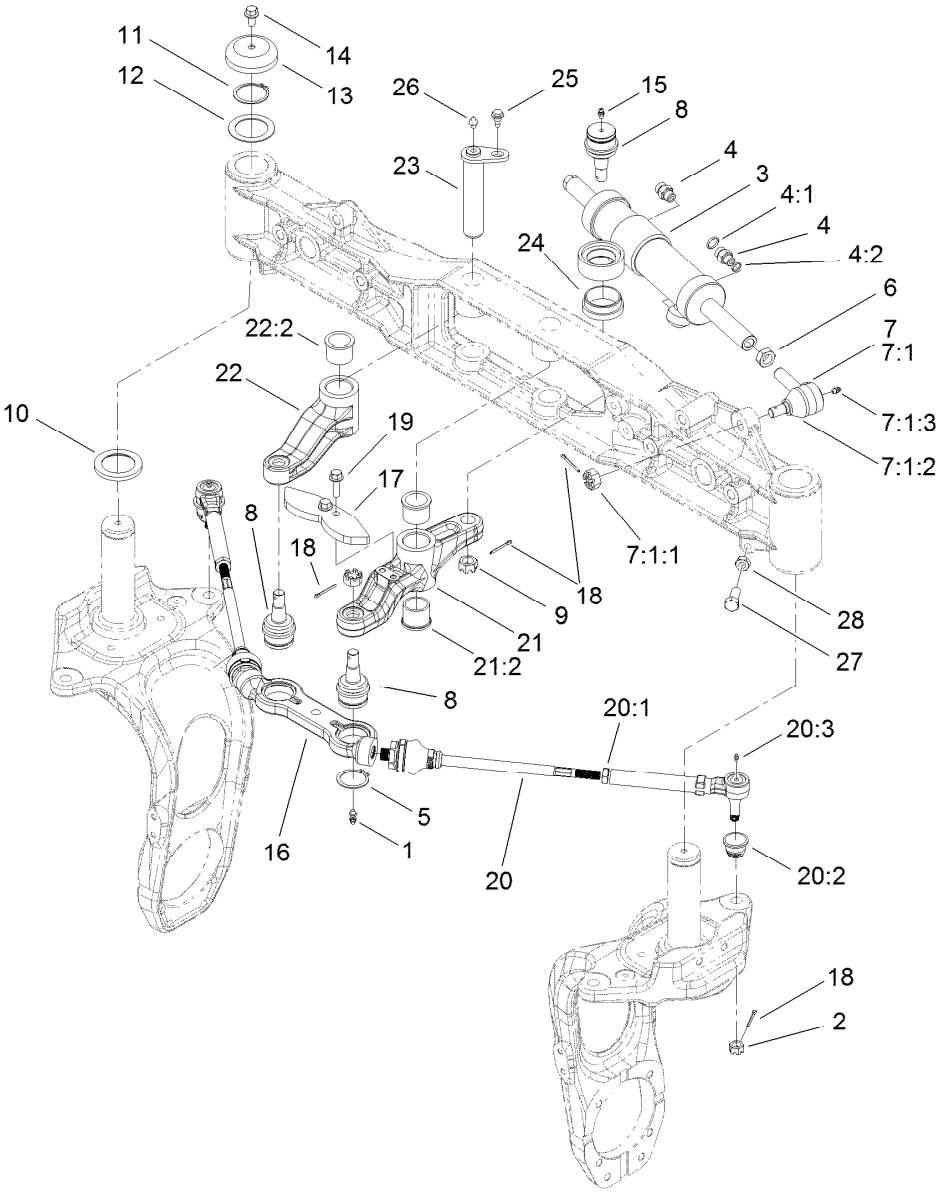


# Rear Steering Assembly (continued)

| Ref. | Part Number | Qty. | Description |
|---|---|---|---|
| 26 | 302-2 | 2 | Fitting-Grease |

| Ref. | Part Number | Qty. | Description |
|---|---|---|---|
| 27 | 325-6 | 2 | Screw-HH |
| 28 | 3218-5 | 2 | Nut-Jam |

● Not serviced separately

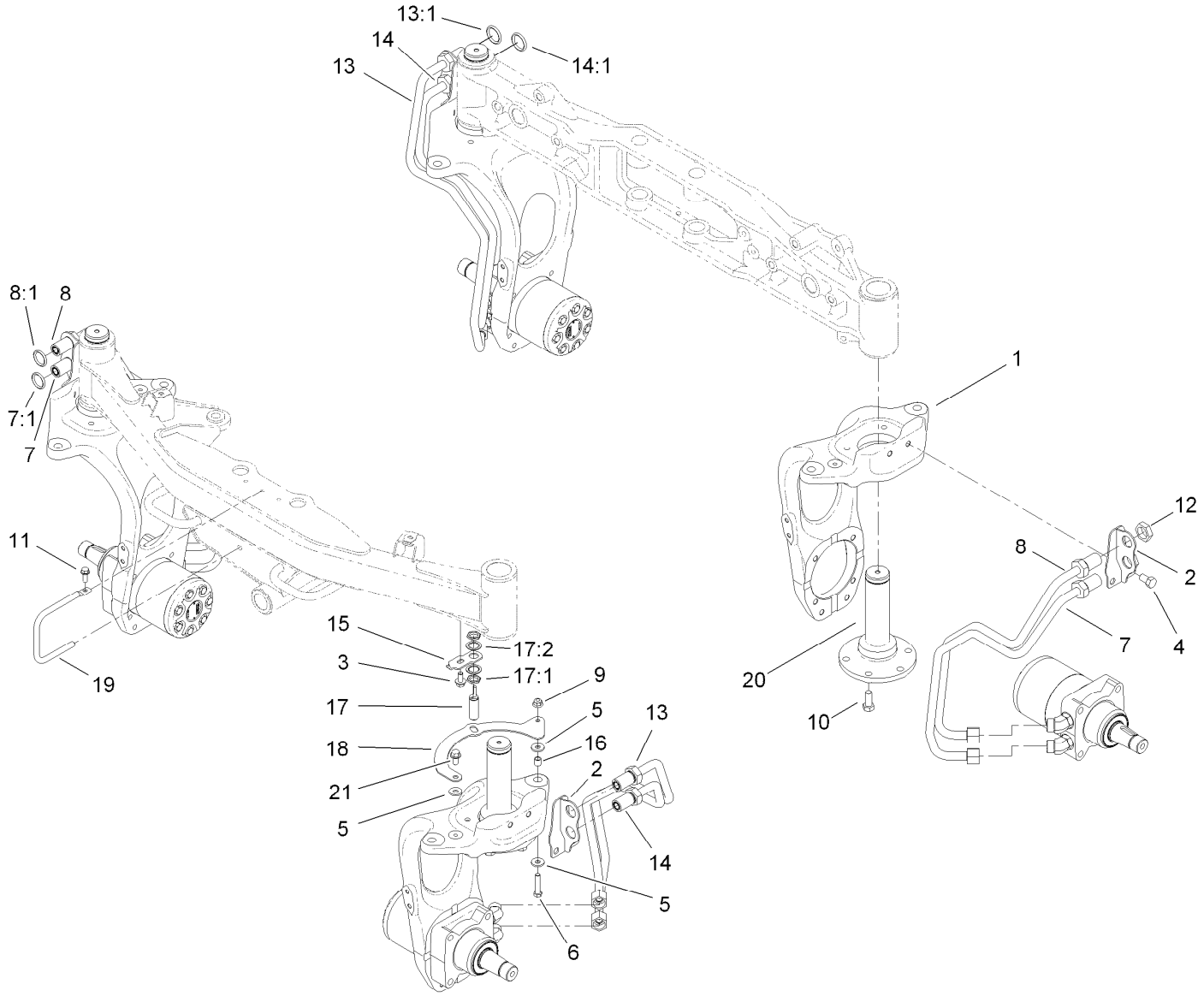


# 4 Wheel Drive Steering Assembly

| Ref. | Part Number | Qty. | Description |
|---|---|---|---|
| 1 | 117-2951 | 4 | Base-Fork, Steer |
| 2 | 119-1410-03 | 4 | Bulkhead Bracket ASM |
| 3 | 110-9380 | 1 | Screw-HWH |
| 4 | 325-3 | 8 | Screw-HH |
| 5 | 5-0838 | 3 | Washer |
| 6 | 32128-21 | 1 | Nut-HF |
| 7 | 117-2948 | 2 | Upper Tube ASM (Lrrf) |
| 7:1 | 237-65 | 1 | O-Ring |
| 8 | 117-2949 | 2 | Lower Tube ASM (Lrrf) |
| 8:1 | 237-65 | 1 | O-Ring |
| 9 | 323-8 | 1 | Screw-HH |
| 10 | 117-3266 | 20 | Screw-HH |
| 11 | 32144-41 | 1 | Screw-Taptite |
| 12 | 340-74 | 8 | Nut-Lock, Bulkhead |

| Ref. | Part Number | Qty. | Description |
|---|---|---|---|
| 13 | 117-2946 | 2 | Upper Tube ASM (Rrlf) |
| 13:1 | 237-65 | 1 | O-Ring |
| 14 | 117-2947 | 2 | Lower Tube ASM (Rrlf) |
| 14:1 | 237-65 | 1 | O-Ring |
| 15 | 119-1413 | 1 | Bracket-Sensor |
| 16 | 103-1166 | 1 | Spacer-Tube, Pump Link |
| 17 | 115-5300 | 1 | Proximity Switch ASM |
| 17:1 | 117-3207 | 2 | Nut-Hex |
| 17:2 | 117-3208 | 2 | Washer-Lock, Int Tooth |
| 18 | 117-2216-03 | 1 | Bracket-Target |
| 19 | 117-3178 | 1 | Rod-Guide |
| 20 | 117-3361 | 4 | Spindle-Steer |
| 21 | 3234-47 | 1 | Screw-HHF |

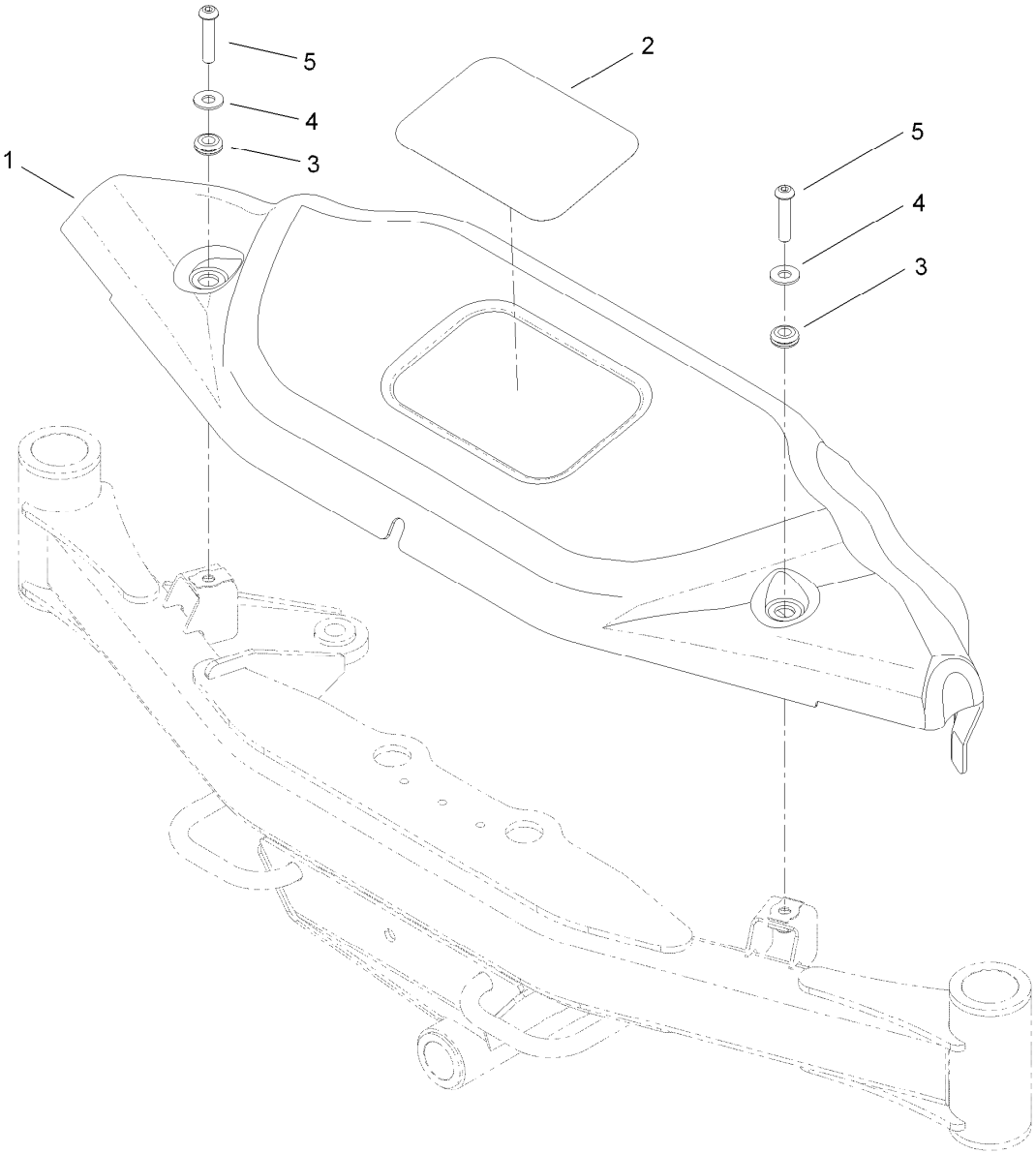


# Front Cover Assembly

| Ref. | Part Number | Qty. | Description |
|---|---|---|---|
| 1 | 119-9895 | 1 | Cover-Front |
| 2 | 104-7213 | 1 | Decal |
| 3 | 1-633630 | 2 | Grommet |
| 4 | 100-7403 | 2 | Washer-Flat |
| 5 | 95-3857 | 2 | Screw-HSBH |

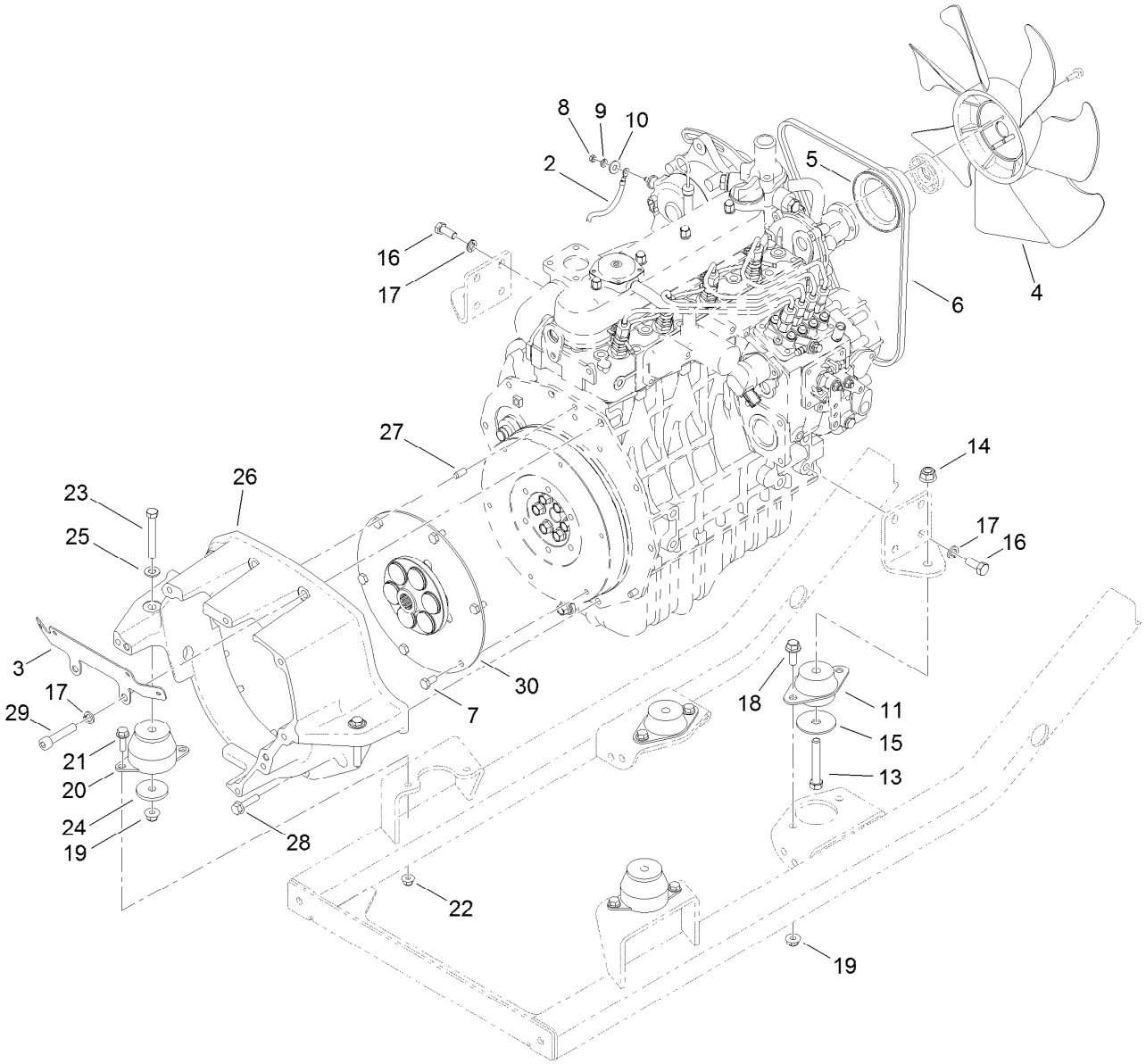


# Engine Component Assembly

| Ref. | Part Number | Qty. | Description |
|---|---|---|---|
| 2 | 100-5552 | 1 | Harness-Wire |
| 3 | 117-3173-03 | 1 | Support-Cable |
| 4 | 107-9096 | 1 | Fan-Cooling |
| 5 | 99-3453 | 1 | Pulley-Fan |
| 6 | 115-0123 | 1 | V-Belt |
| 7 | 99-5132 | 6 | Bolt |
| 8 | 33013-00 | 1 | Nut-Hex |
| 9 | 43-5930 | 1 | Washer-Lock, Spring |
| 10 | 3256-2 | 1 | Washer-Flat |
| 11 | 53-9681 | 2 | Mount-Engine |
| 13 | 324-11 | 2 | Screw-HH |
| 14 | 114-8417 | 2 | Nut-HF, NI |
| 15 | 87-5100 | 2 | Washer-Snubbing |
| 16 | 43-0090 | 8 | Screw-HH |

| Ref. | Part Number | Qty. | Description |
|---|---|---|---|
| 17 | 48-9590 | 10 | Washer-Lock |
| 18 | 3234-42 | 4 | Screw-HHF |
| 19 | 104-8301 | 6 | Nut-Flange, NI |
| 20 | 107-2289 | 2 | Mount-Motor |
| 21 | 3234-17 | 4 | Screw-HHF |
| 22 | 104-8300 | 4 | Nut-Flange, NI |
| 23 | 323-13 | 2 | Screw-HH |
| 24 | 80-8560 | 2 | Washer-Hardened |
| 25 | 3256-24 | 2 | Washer-Flat |
| 26 | 108-5193 | 1 | Housing-Flywheel |
| 27 | 87-1910 | 2 | Pin-Dowel |
| 28 | 33104-035 | 6 | Screw-HHF |
| 29 | 3274-106 | 2 | Screw-HSH |
| 30 | 110-9729 | 1 | Flywheel Coupling ASM |

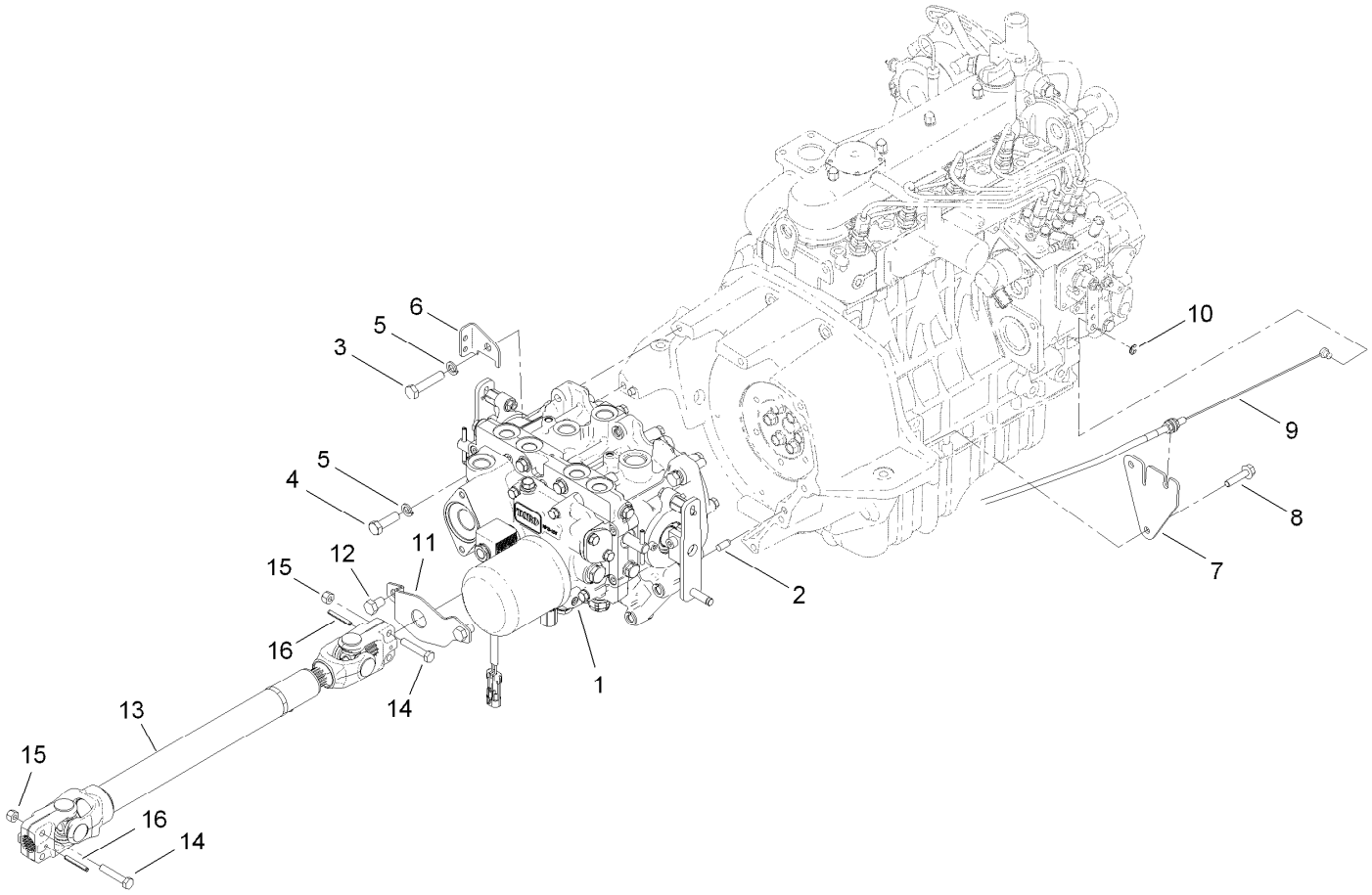


# Transmission Component Assembly

| Ref. | Part Number | Qty. | Description |
|---|---|---|---|
| 1 | 120-9140 | 1 | Transmisson ASM |
| 2 | 87-1910 | 2 | Pin-Dowel |
| 3 | 33115-050 | 6 | Screw-HH |
| 4 | 33115-035 | 1 | Screw-HH |
| 5 | 48-9590 | 7 | Washer-Lock |
| 6 | 120-0239 | 1 | Support-Tube |
| 7 | 114-4060 | 1 | Bracket-Throttle |
| 8 | 33104-035 | 2 | Screw-HHF |

| Ref. | Part Number | Qty. | Description |
|---|---|---|---|
| 9 | 115-0339 | 1 | Cable-Throttle/Choke |
| 10 | 701197 | 1 | E-Ring |
| 11 | 114-4088 | 1 | Shield-Seal |
| 12 | 33115-016 | 2 | Screw-HH |
| 13 | 110-3575 | 1 | Driveshaft ASM |
| 14 | 322-9 | 4 | Screw-HH |
| 15 | 3296-29 | 4 | Nut-Lock, NI |
| 16 | 32121-34 | 2 | Pin-Roll |

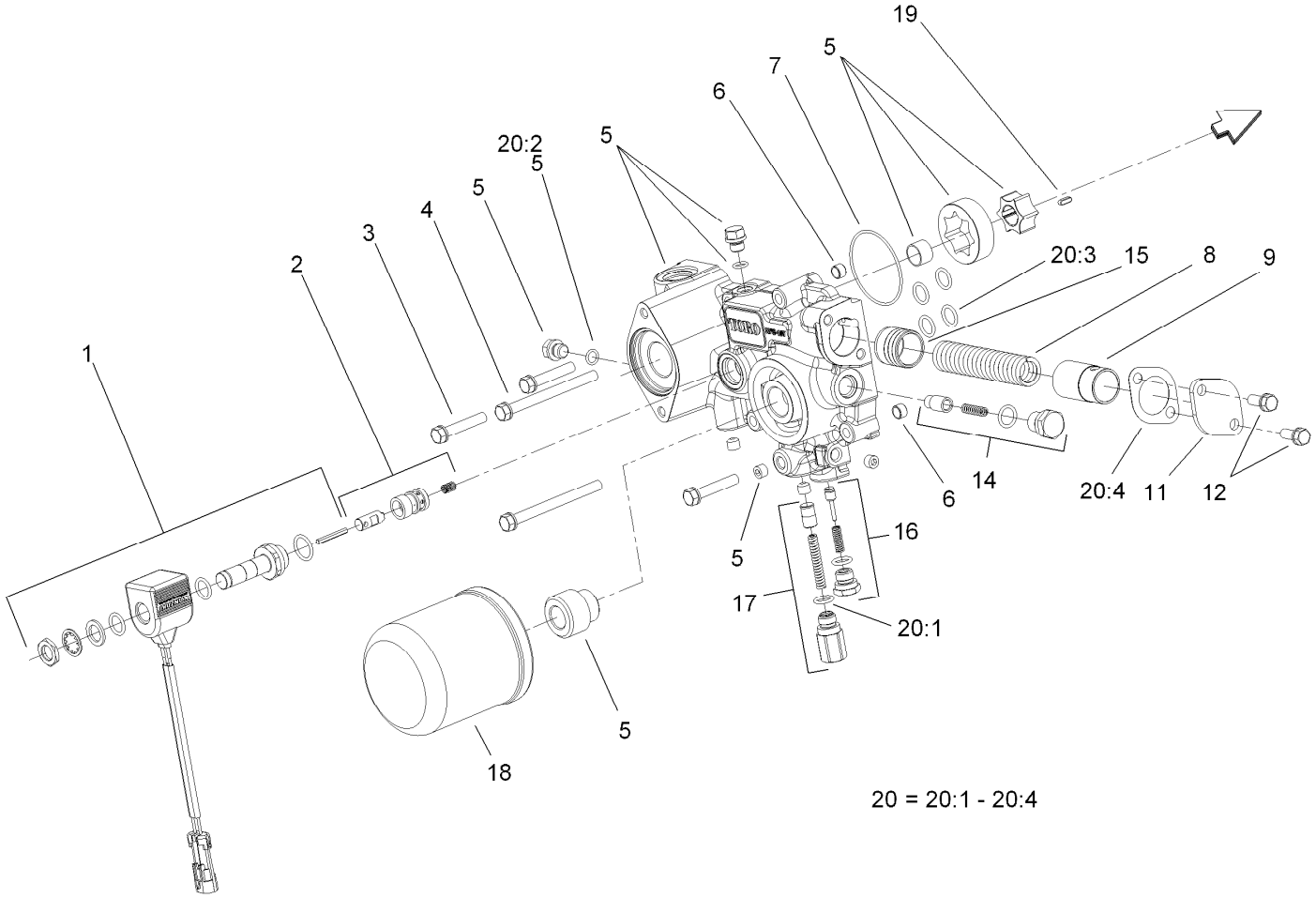


# Charge Pump Housing Assembly
# Transmission Assembly No. 120-9140

| Ref. | Part Number | Qty. | Description |
|---|---|---|---|
| 1 | 107-0851 | 1 | Solenoid ASM |
| 2 | 107-0850 | 1 | Solenoid Valve ASM |
| 3 | 107-0863 | 3 | Bolt |
| 4 | 107-0864 | 2 | Bolt |
| 5 | 107-0840 | 1 | Pump Body ASM |
| 6 | 107-0848 | 2 | Pin |
| 7 | 107-0856 | 1 | O-Ring |
| 8 | 107-0845 | 1 | Spring |
| 9 | 107-0844 | 1 | Collar |
| 11 | 107-0846 | 1 | Cover |
| 12 | 93-0457 | 2 | Bolt And Washer ASM |

| Ref. | Part Number | Qty. | Description |
|---|---|---|---|
| 14 | 107-0843 | 1 | Filter Bypass Valve ASM |
| 15 | 107-0818 | 1 | Piston |
| 16 | 120-5153 | 1 | Charge Relief Valve ASM |
| 17 | 107-0841 | 1 | Pressure Valve ASM |
| 18 | 108-5194 | 1 | Filter-Oil, HYD |
| 19 | 107-0865 | 1 | Key |
| 20 | 107-0855 | 1 | Charge Pump Seal Kit |
| 20:1 | 93-0418 | 2 | O-Ring |
| 20:2 | 107-0817 | 2 | O Ring-Plug |
| 20:3 | 104-3298 | 6 | Packing |
| 20:4 | 107-0847 | 1 | Gasket |

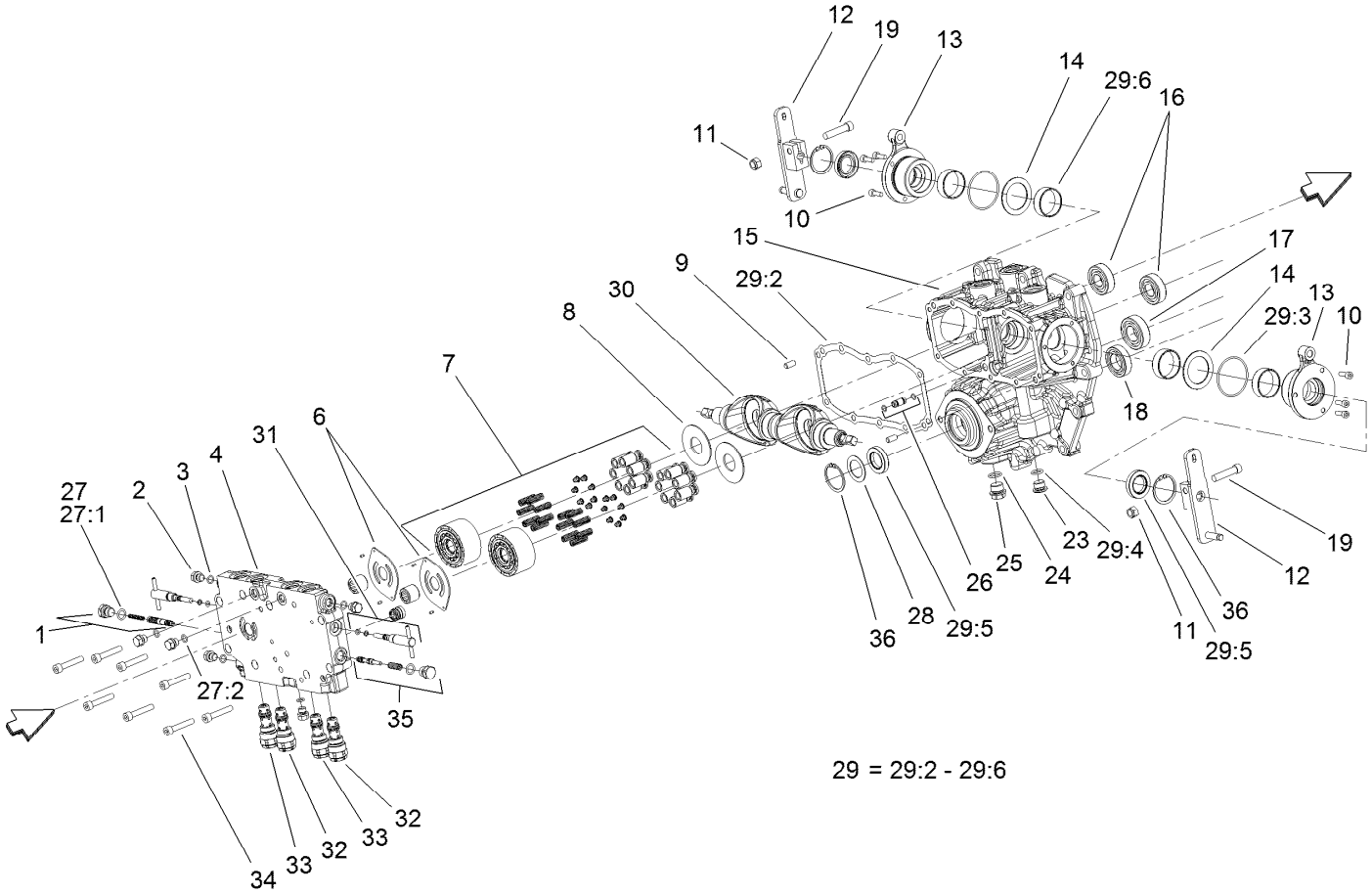


# Center Section Assembly
# Transmission Assembly No. 120-9140

| Ref. | Part Number | Qty. | Description |
|---|---|---|---|
| 1 | 107-0807 | 1 | Valve-Flushing, RH |
| 2 | 107-0857 | 6 | Plug |
| 3 | 107-0817 | 6 | O Ring-Plug |
| 4 | 120-5150 | 1 | Center Case ASM |
| 6 | 107-0805 | 2 | Plate-Valve |
| 7 | 107-0824 | 2 | Cylinder Block ASM |
| 8 | 107-0830 | 2 | Plate-Thrust |
| 9 | 92-0765 | 4 | Pin-Parallel |
| 10 | 107-0859 | 6 | Bolt |
| 11 | 120-6681 | 2 | U-Nut |
| 12 | 120-6680 | 2 | Arm-Control |
| 13 | 107-0832 | 2 | Side Cover ASM |
| 14 | 107-0829 | 2 | Washer |
| 15 | 120-5151 | 1 | Pump Housing ASM |
| 16 | 107-0826 | 2 | Bearing |
| 17 | 107-0821 | 1 | Bearing |
| 18 | 107-0838 | 1 | Bearing |
| 19 | 120-6682 | 2 | Bolt (10 X 40) |
| 23 | 107-0861 | 1 | Plug-NPTF |
| 24 | 107-0862 | 1 | O-Ring |

| Ref. | Part Number | Qty. | Description |
|---|---|---|---|
| 25 | 107-0867 | 1 | Plug |
| 26 | 107-0812 | 1 | Pipe |
| 27 | 107-0852 | 1 | Center Case Seal Kit |
| 27:1 | 93-0418 | 2 | O-Ring |
| 27:2 | 107-0817 | 6 | O Ring-Plug |
| 28 | 107-0813 | 1 | Spacer |
| 29 | 107-0853 | 1 | Pump Housing Seal Kit |
| 29:2 | 107-0810 | 1 | Gasket-Case, Center |
| 29:3 | 107-0817 | 2 | O Ring-Plug |
| 29:4 | 104-3298 | 1 | Packing |
| 29:5 | 107-0814 | 3 | Seal |
| 29:6 | 107-0825 | 4 | Ring-Seal |
| 30 | 120-6679 | 2 | Plate-Swash |
| 31 | 107-0808 | 2 | Valve-Bypass |
| 32 | 120-6754 | 2 | Valve-Rear |
| 33 | 107-0803 | 2 | Valve-Front |
| 34 | 107-0863 | 8 | Bolt |
| 35 | 107-0806 | 1 | Valve-Flushing, LH |
| 36 | 92-0757 | 2 | Ring-Snap |

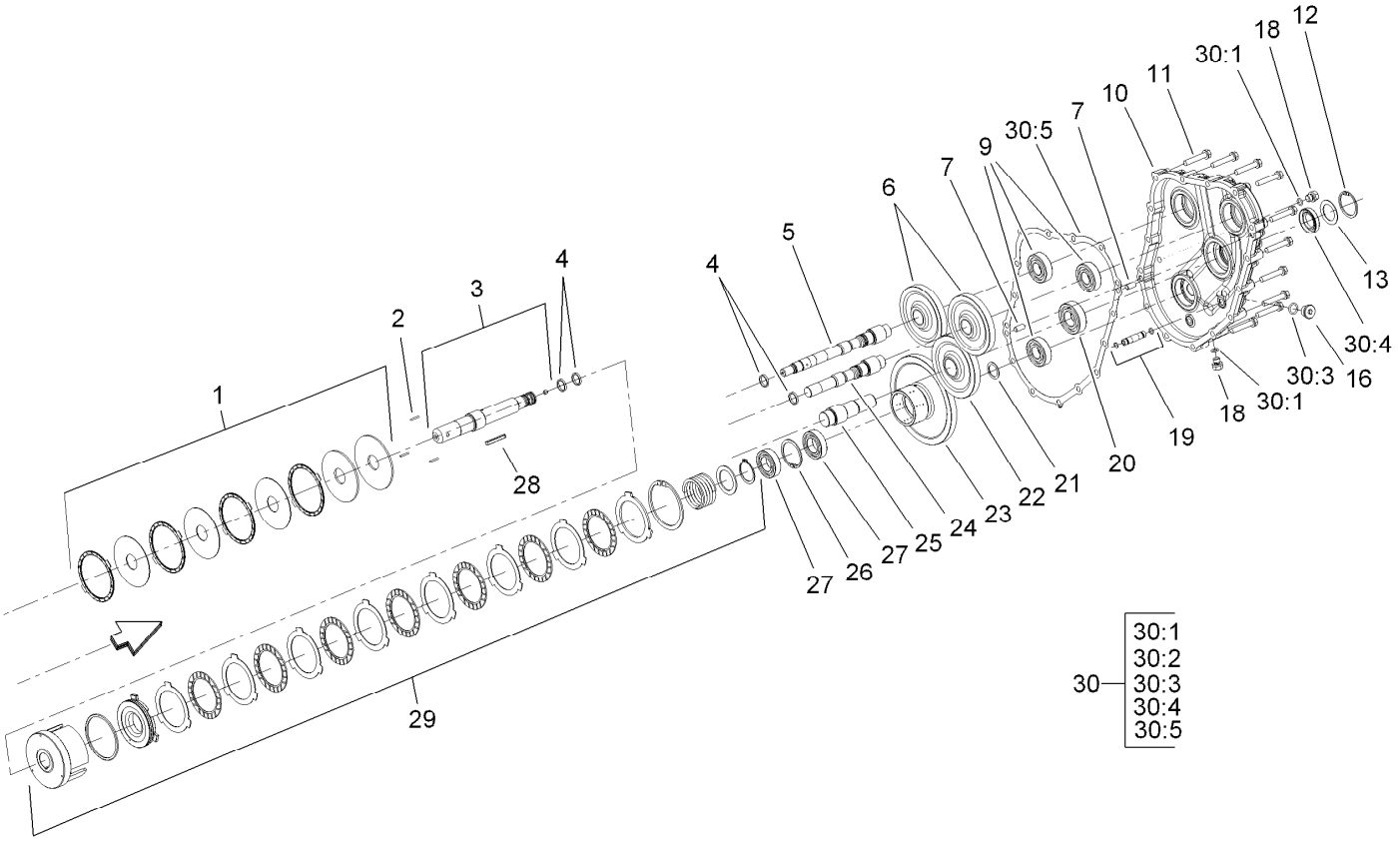


# Gear Case and Clutch Assembly
# Transmission Assembly No. 120-9140

| Ref. | Part Number | Qty. | Description |
|---|---|---|---|
| 1 | 107-0839 | 1 | PTO Brake ASM |
| 2 | 107-0837 | 3 | Rod-Push |
| 3 | 107-0833 | 1 | PTO Shaft ASM |
| 4 | 107-0825 | 2 | Ring-Seal |
| 5 | 107-0827 | 1 | Shaft-Pump |
| 6 | 107-0823 | 2 | Gear-Pump |
| 7 | 92-0765 | 4 | Pin-Parallel |
| 9 | 107-0826 | 4 | Bearing |
| 10 | 120-5152 | 1 | Housing-Gear Case |
| 11 | 107-0863 | 13 | Bolt |
| 12 | 92-0757 | 1 | Ring-Snap |
| 13 | 107-0813 | 1 | Spacer |
| 16 | 107-0861 | 1 | Plug-NPTF |
| 18 | 107-0857 | 6 | Plug |
| 19 | 107-0811 | 1 | Pipe |
| 20 | 107-0821 | 2 | Bearing |

| Ref. | Part Number | Qty. | Description |
|---|---|---|---|
| 21 | 107-0836 | 1 | Spacer |
| 22 | 107-0820 | 1 | Gear-Input |
| 23 | 107-0834 | 1 | Gear-PTO |
| 24 | 107-0822 | 1 | Shaft-Pump |
| 25 | 107-0819 | 1 | Shaft-Input |
| 26 | 92-0758 | 1 | Ring-Snap |
| 27 | 107-0838 | 3 | Bearing |
| 28 | 107-0866 | 1 | Key |
| 29 | 107-0835 | 1 | Clutch Cylinder ASM |
| 30 | 107-0854 | 1 | Gear Housing Seal Kit |
| 30:1 | 107-0817 | 2 | O Ring-Plug |
| 30:2 | | 2 | O-Ring ● |
| 30:3 | 104-3298 | 1 | Packing |
| 30:4 | 107-0814 | 1 | Seal |
| 30:5 | 107-0816 | 1 | Gasket-Housing, Gear |

● Not serviced separately

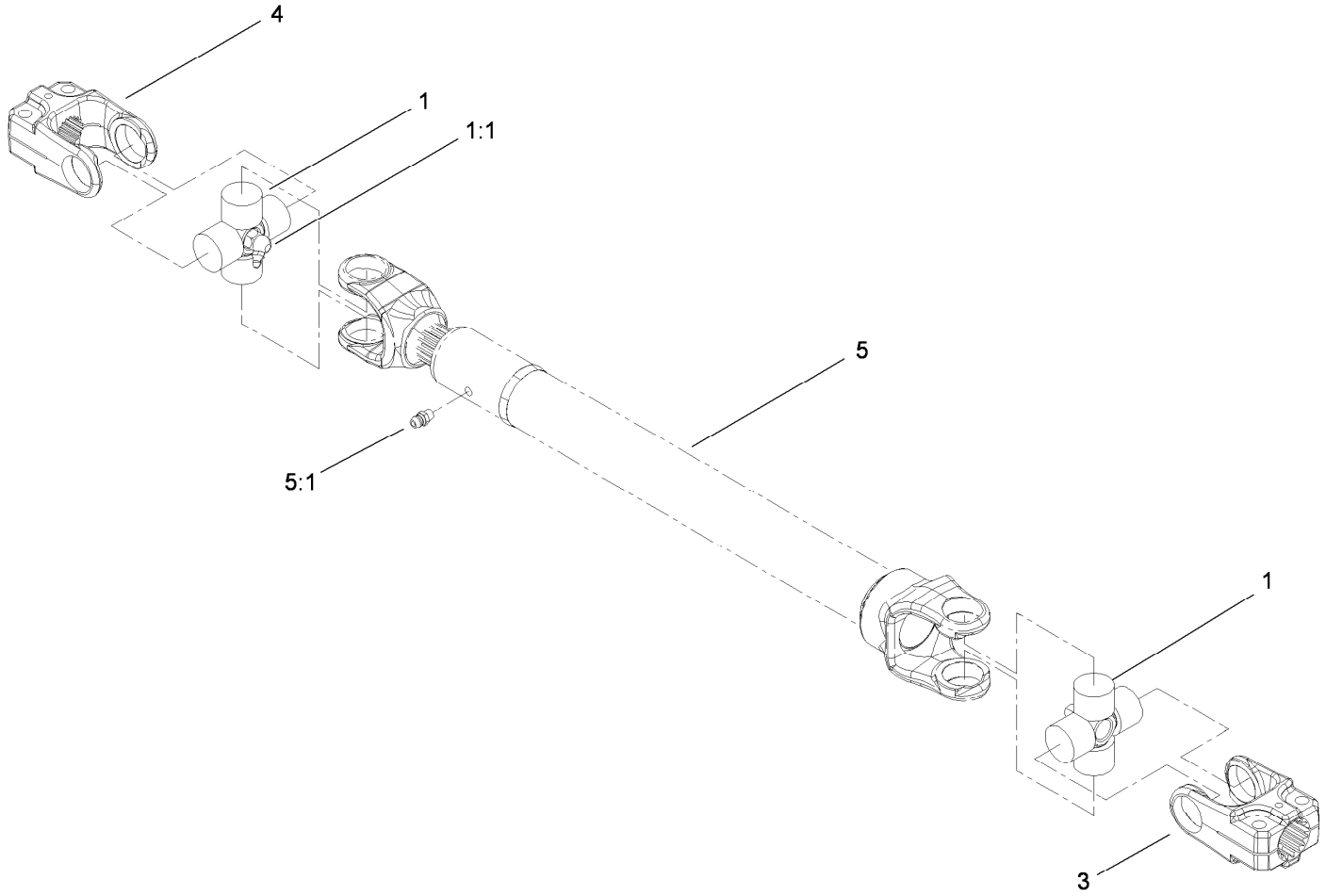


# Driveshaft Assembly No. 110-3575

| *Ref.* | *Part Number* | *Qty.* | *Description* |
|---|---|---|---|
| 1 | 112-1687 | 2 | Cross And Bearing Kit |
| 1:1 | 62-3820 | 1 | Fitting-Grease |
| 3 | 54-9040 | 1 | Yoke-End |
| 4 | 54-9090 | 1 | Yoke-End |
| 5 | | 1 | Tube-Yoke, Slip ● |
| 5:1 | 302-22 | 1 | Fitting-Grease |

● Not serviced separately

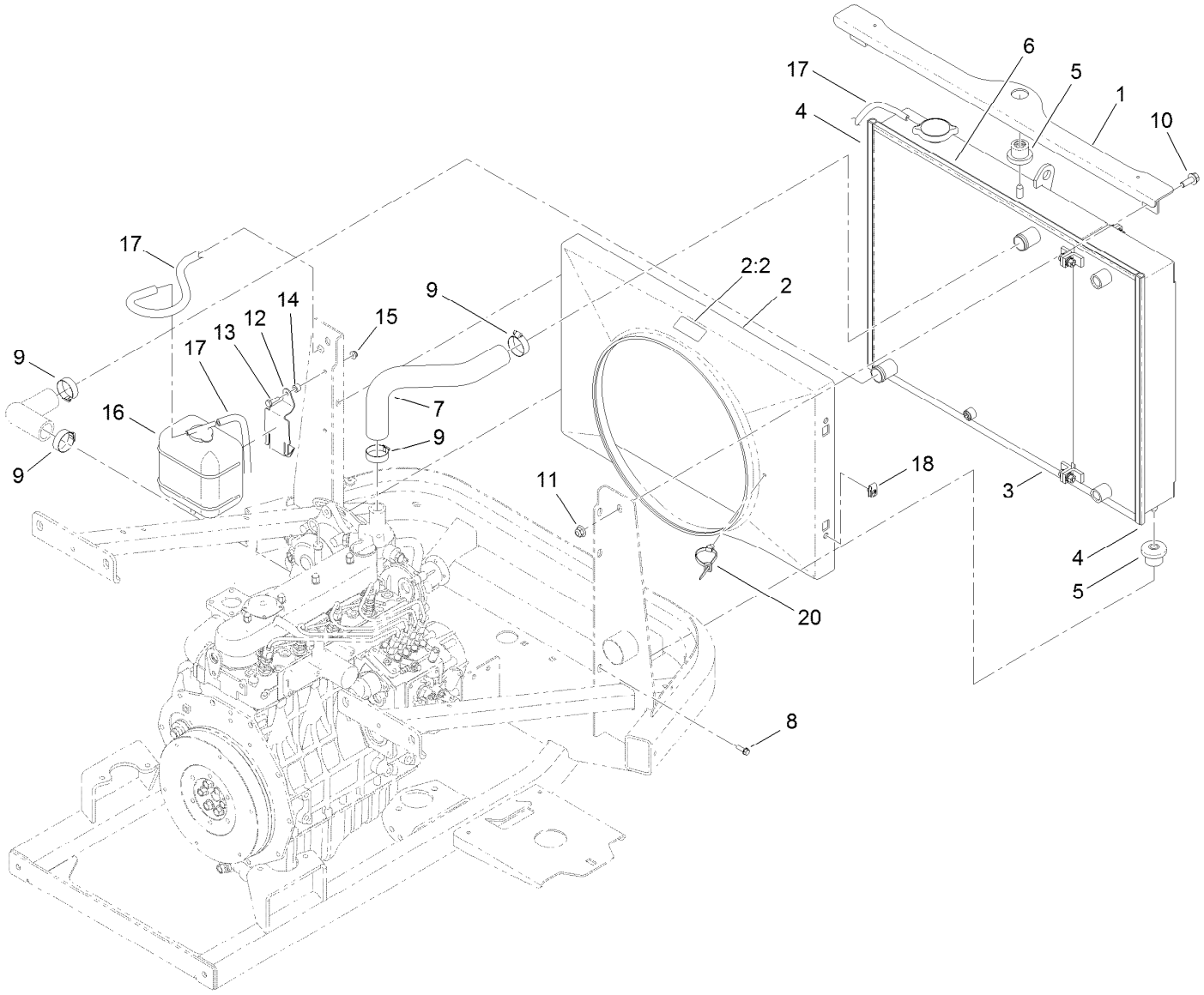


# Radiator Component Assembly

| Ref. | Part Number | Qty. | Description |
|---|---|---|---|
| 1 | 119-1423-03 | 1 | Radiator Support ASM |
| 2 | 117-3268 | 1 | Shroud Fan ASM |
| 2:2 | 117-4766 | 1 | Decal-Warning, Fan |
| 3 | | 1 | Radiator And Cooler ASM ● |
| 4 | 119-1426 | 2 | Seal-Bulb |
| 5 | 119-1422 | 3 | Mount-Isolator |
| 6 | 119-1427 | 2 | Seal-Bulb |
| 7 | 115-0330 | 1 | Hose-Radiator, Upper |
| 8 | 32105-15 | 4 | Screw |
| 9 | 2412-34 | 4 | Clamp-Hose |

| Ref. | Part Number | Qty. | Description |
|---|---|---|---|
| 10 | 3234-42 | 2 | Screw-HHF |
| 11 | 104-8301 | 2 | Nut-Flange, NI |
| 12 | 108-9930-03 | 1 | Bracket-Bottle |
| 13 | 321-5 | 2 | Screw-HH |
| 14 | 98-4799 | 2 | Tube-Spacer |
| 15 | 104-7201 | 2 | Nut-HF |
| 16 | 104-9318 | 1 | Overflow Bottle ASM |
| 17 | 108-3284 | 2 | Hose-Fuel |
| 18 | 107069 | 4 | Clip |
| 20 | 32180-030 | 1 | Clip-Harness |

● Not serviced separately

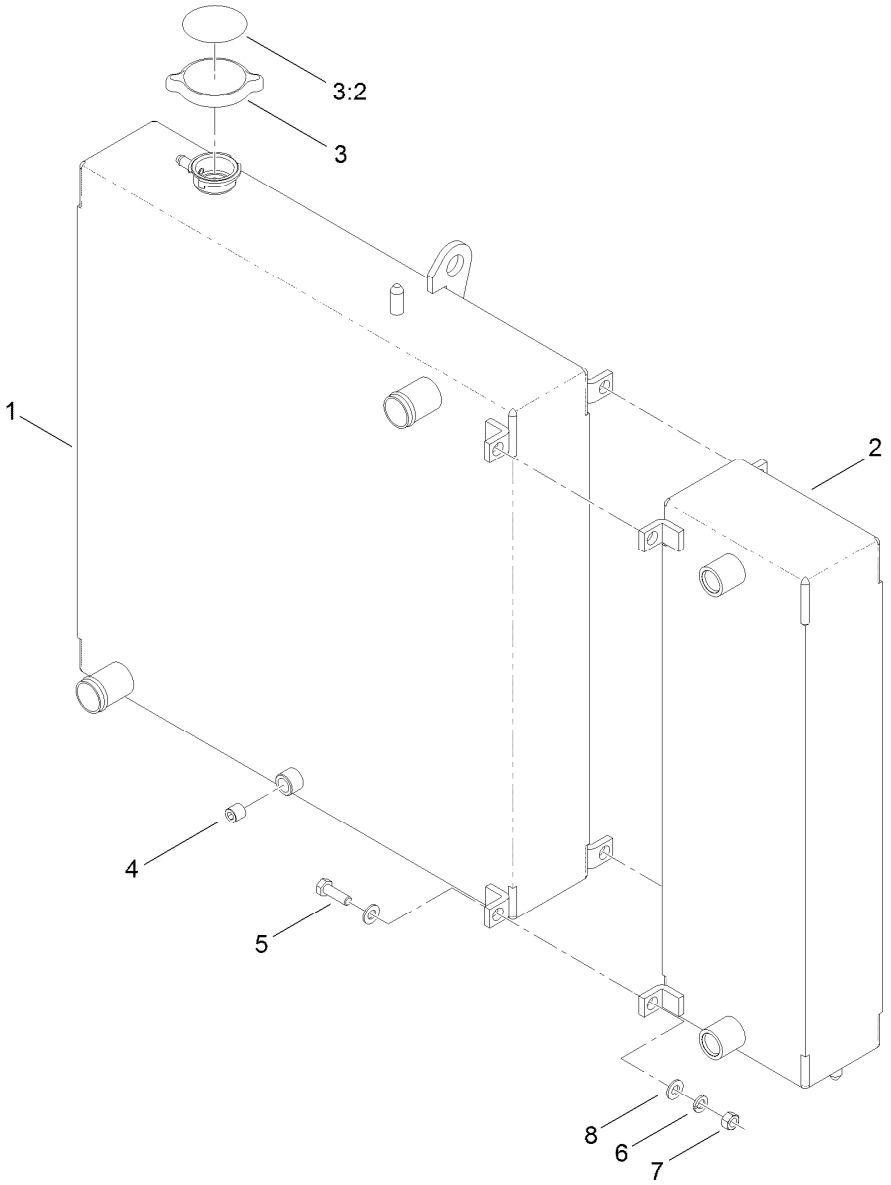


# Radiator and Cooler Assembly

| Ref. | Part Number | Qty. | Description |
|---|---|---|---|
| 1 | 115-0050 | 1 | Radiator |
| 2 | 115-0051 | 1 | Cooler |
| 3 | 119-1430 | 1 | Radiator Cap ASM |
| 3:2 | 117-3276 | 1 | Decal-Danger, Radiator Cap |
| 4 | 99-8551 | 1 | Plug-Pipe |
| 5 | 322-5 | 4 | Screw-HH |
| 6 | 3253-4 | 4 | Washer-Lock |
| 7 | 3217-6 | 4 | Nut-Hex |
| 8 | 3256-23 | 8 | Washer-Flat |

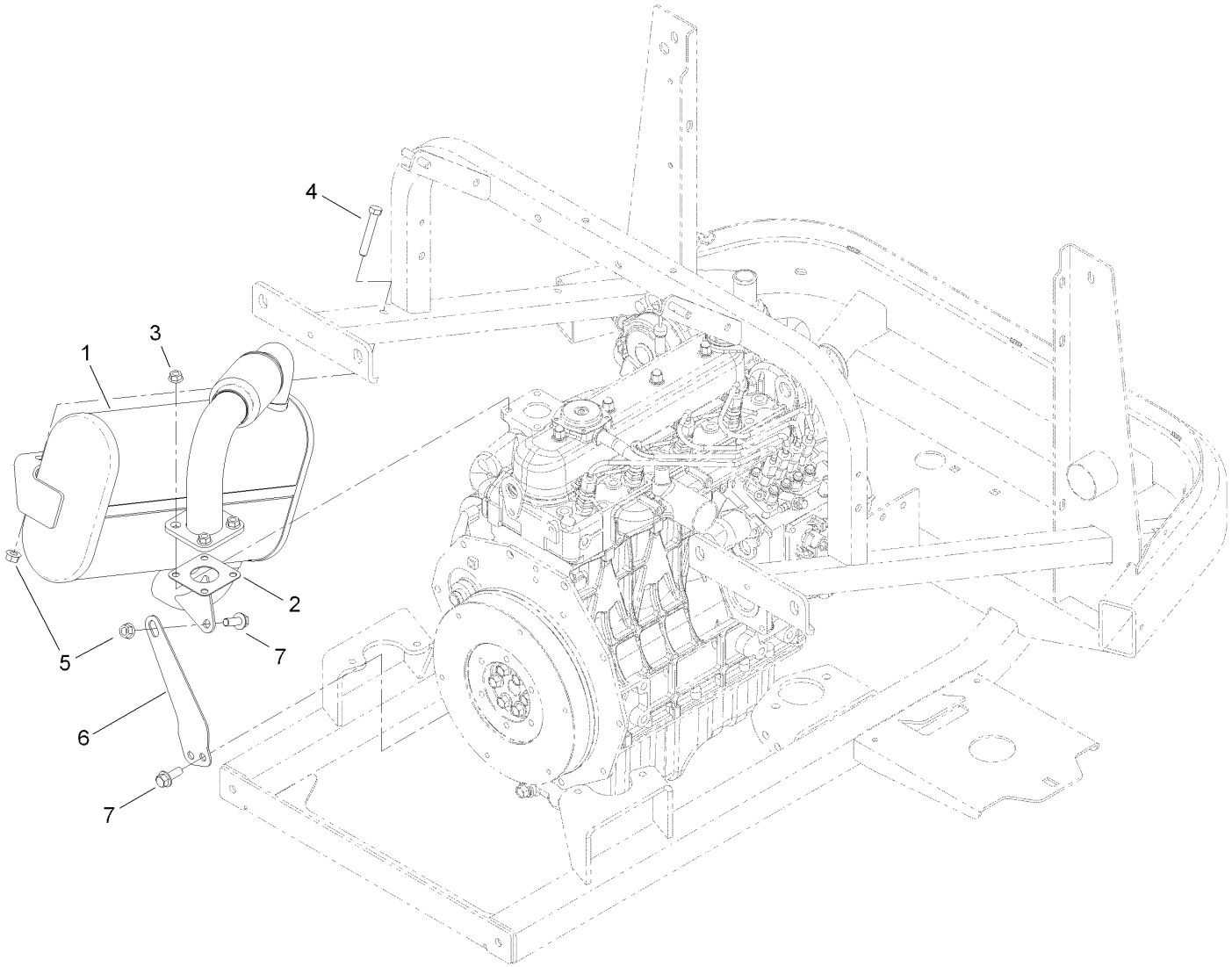


# Muffler Assembly

| *Ref.* | *Part Number* | *Qty.* | *Description* |
|---|---|---|---|
| 1 | 115-0419 | 1 | Muffler |
| 2 | 98-9611 | 1 | Gasket |
| 3 | 33004-00 | 4 | Nut-HF |
| 4 | 323-11 | 2 | Screw-HH |
| 5 | 32128-21 | 5 | Nut-HF |
| 6 | 117-3033-03 | 1 | Support-Muffler |
| 7 | 3234-42 | 3 | Screw-HHF |

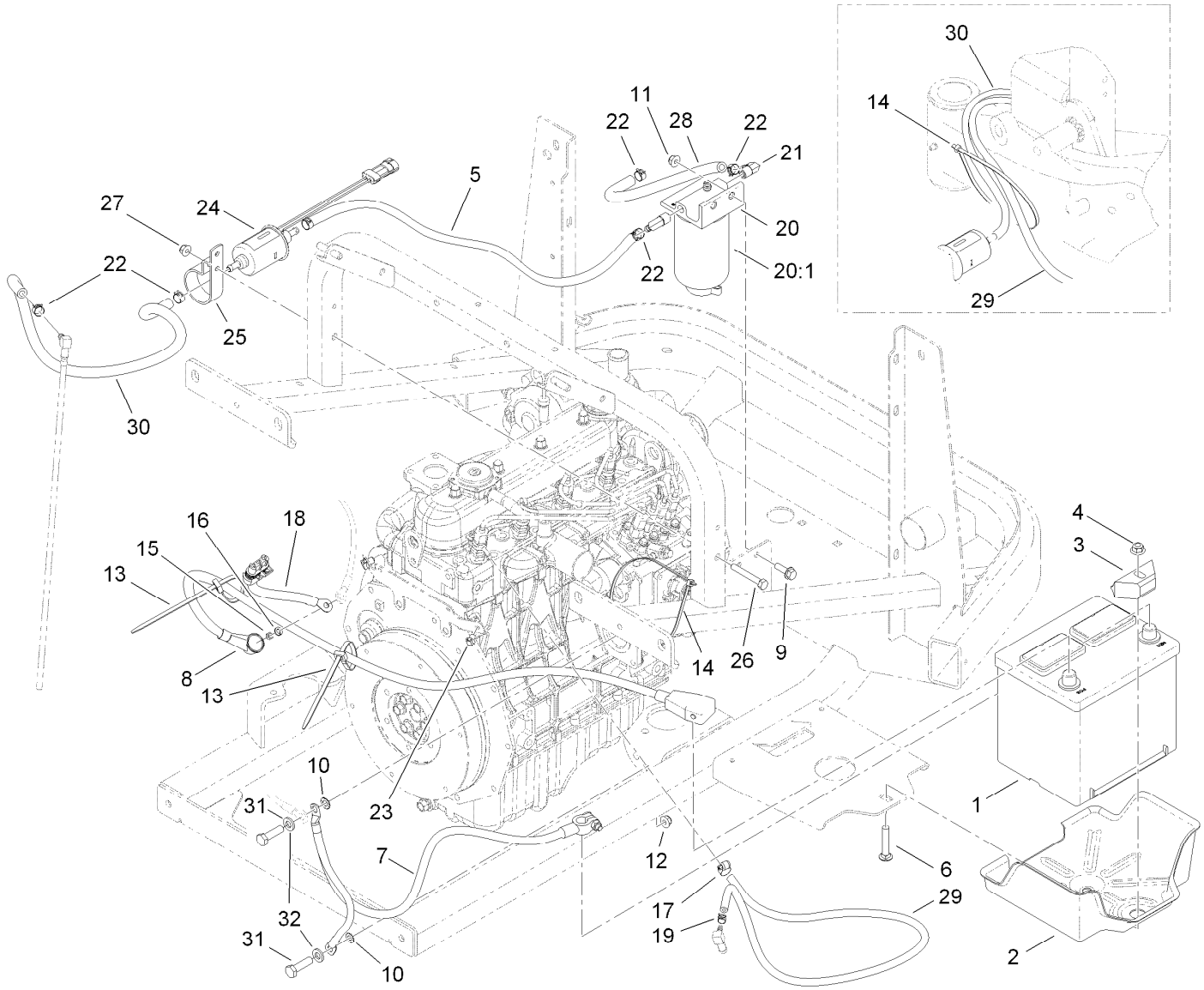


# Battery and Fuel Delivery Assembly

| Ref. | Part Number | Qty. | Description |
|---|---|---|---|
| 1 | 106-5187 | 1 | Battery |
| 2 | 117-3027 | 1 | Tray-Battery |
| 3 | 66-2490 | 1 | Retainer-Battery |
| 4 | 104-8301 | 1 | Nut-Flange, NI |
| 5 | 109-0274 | 1 | Hose-Fuel |
| 6 | 3231-6 | 1 | Screw-CARR |
| 7 | 105-0040 | 1 | Cable-Battery, Negative |
| 8 | 104-0086 | 1 | Cable-Battery, Positive |
| 9 | 3234-17 | 2 | Screw-HHF |
| 10 | 3255-8 | 2 | Washer-Lock |
| 11 | 104-8300 | 2 | Nut-Flange, NI |
| 12 | 32128-25 | 2 | Nut-HF |
| 13 | 3290-378 | 2 | Tie-Cable |
| 14 | 3290-379 | 1 | Tie-Cable |
| 15 | 33014-00 | 1 | Nut-Hex |
| 16 | 3253-4 | 1 | Washer-Lock |
| 17 | 2412-108 | 1 | Clamp-Worm |

| Ref. | Part Number | Qty. | Description |
|---|---|---|---|
| 18 | 99-3441 | 1 | Harness-Wire, Fusible Link |
| 19 | 2412-80 | 1 | Clamp-Hose |
| 20 | 110-9044 | 1 | Filter-Seperator |
| 20:1 | 110-9049 | 1 | Filter-Spin On |
| 21 | 353-781 | 2 | Fitting-Elbow |
| 22 | 92-2379 | 6 | Clamp-Hose |
| 23 | 32180-030 | 2 | Clip-Harness |
| 24 | 110-8806 | 1 | Pump-Fuel |
| 25 | 110-8817 | 1 | Bracket-Pump, Fuel |
| 26 | 321-15 | 1 | Screw-HH |
| 27 | 104-7201 | 1 | Nut-HF |
| 28 | 110-4105 | 1 | Hose-Fuel |
| 29 | 110-3958 | 1 | Hose-Fuel |
| 30 | 110-3257 | 1 | Hose-Fuel |
| 31 | 322-6 | 2 | Screw-HH |
| 32 | 3256-23 | 2 | Washer-Flat |

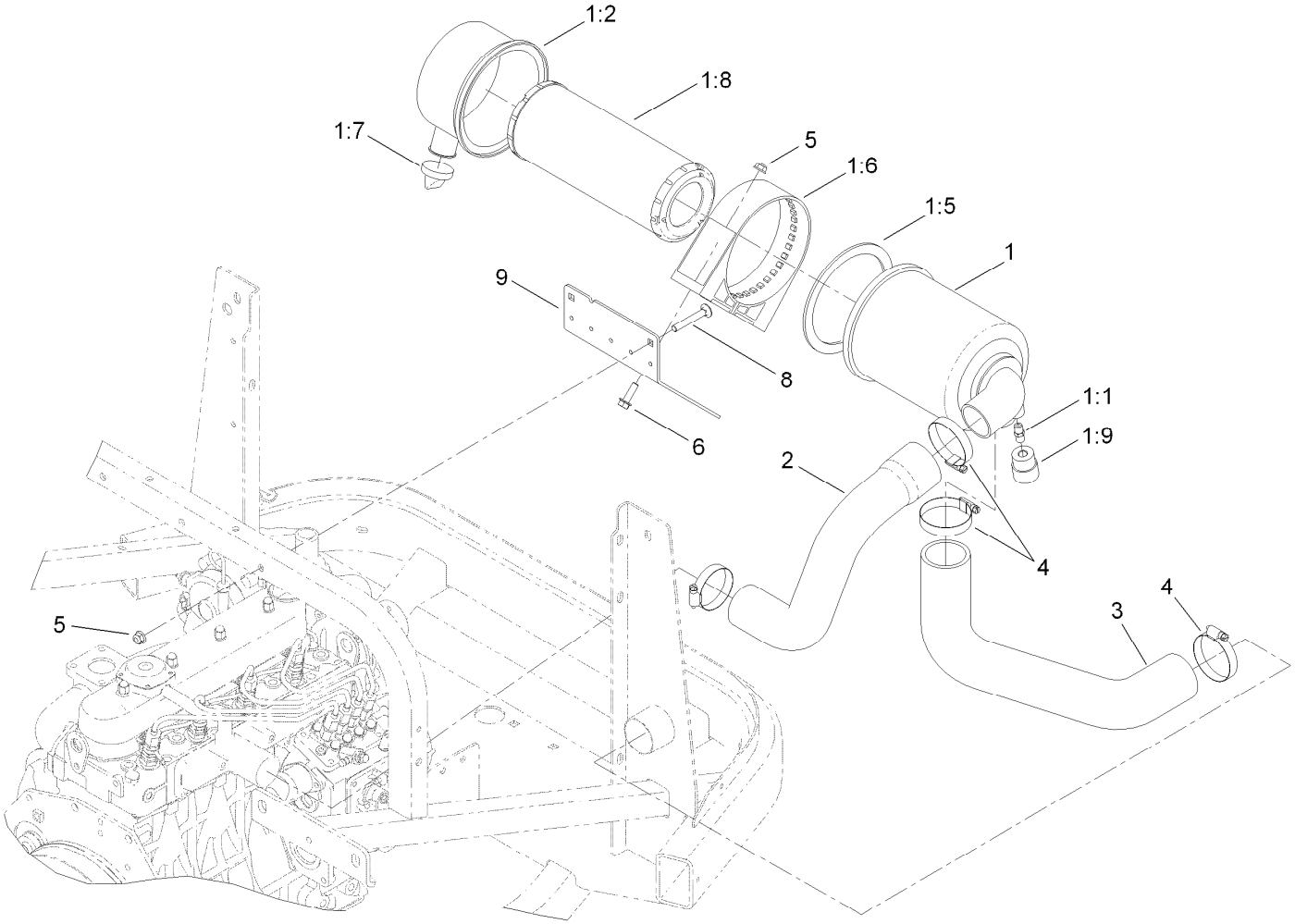


# Air Cleaner Assembly

| Ref. | Part Number | Qty. | Description |
|---|---|---|---|
| 1 | 104-3428 | 1 | Air Cleaner ASM |
| 1:1 | 105-4292 | 1 | Nipple-Pipe |
| 1:2 | 104-0497 | 1 | Cover ASM |
| 1:5 | 104-4897 | 1 | Gasket |
| 1:6 | 98-4525 | 1 | Bracket-Cleaner, Air |
| 1:7 | 104-0498 | 1 | Valve-Vacuator |
| 1:8 | 108-3810 | 1 | Filter-Air |
| 1:9 | 93-9164 | 1 | Indicator-Mini |
| 2 | 117-3020 | 1 | Hose-Air Intake, Engine |
| 3 | 117-3021 | 1 | Hose-Air Inlet |
| 4 | 2412-130 | 4 | Clamp-Hose |
| 5 | 104-8300 | 4 | Nut-Flange, NI |
| 6 | 3234-17 | 2 | Screw-HHF |
| 8 | 3230-7 | 2 | Screw-CARR |
| 9 | 119-1350-03 | 1 | Plate-Air Cleaner |

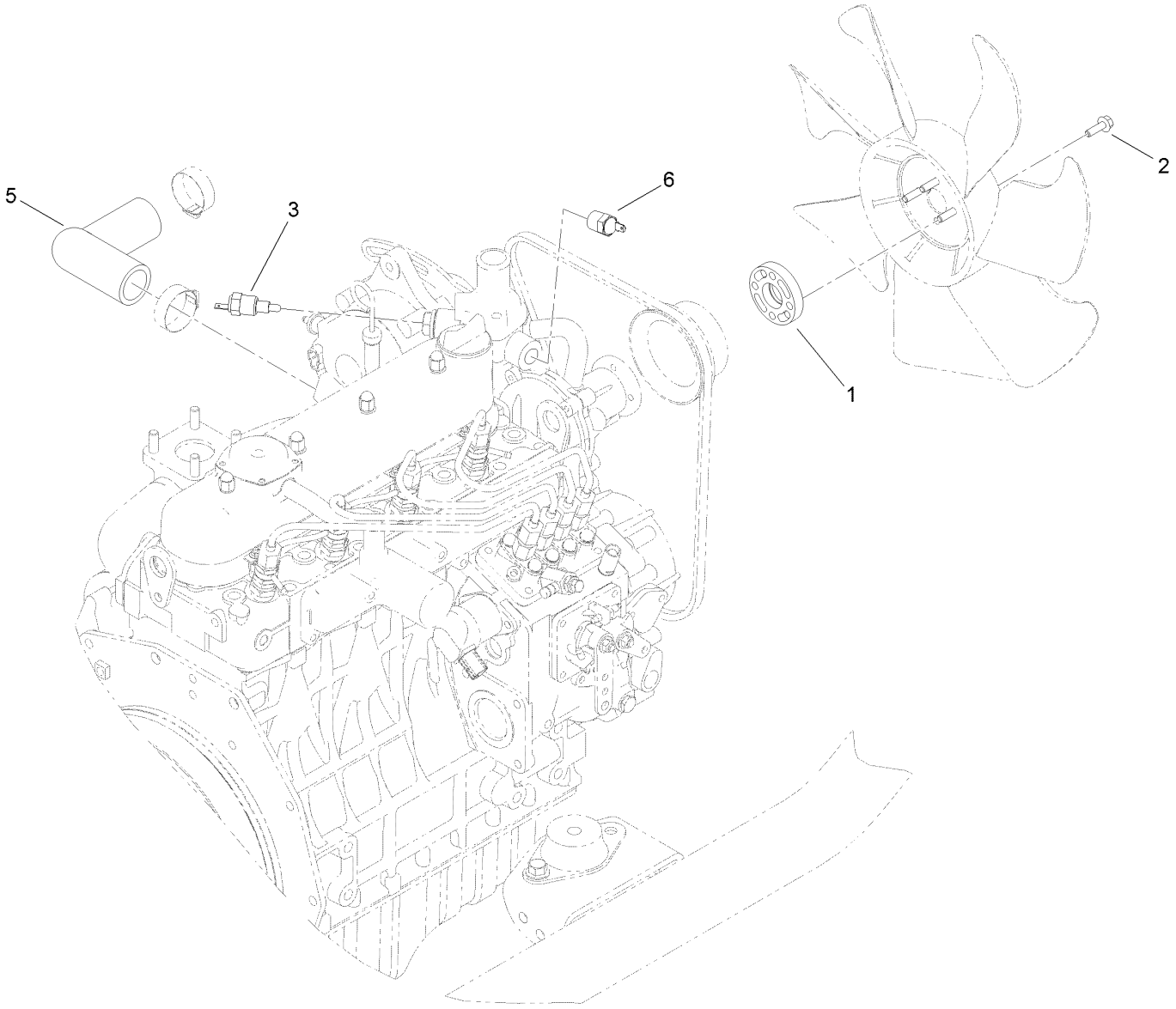


# Fan Spacer and Thermoswitch Assembly

| *Ref.* | *Part Number* | *Qty.* | *Description* |
|---|---|---|---|
| 1 | 104-4247 | 1 | Spacer-Fan |
| 2 | 33103-020 | 4 | Screw-HHF |
| 3 | 98-9719 | 1 | Thermoswitch |
| 5 | 115-0331 | 1 | Hose-Radiator, Lower |
| 6 | 112-0183 | 1 | Switch-Thermometer |

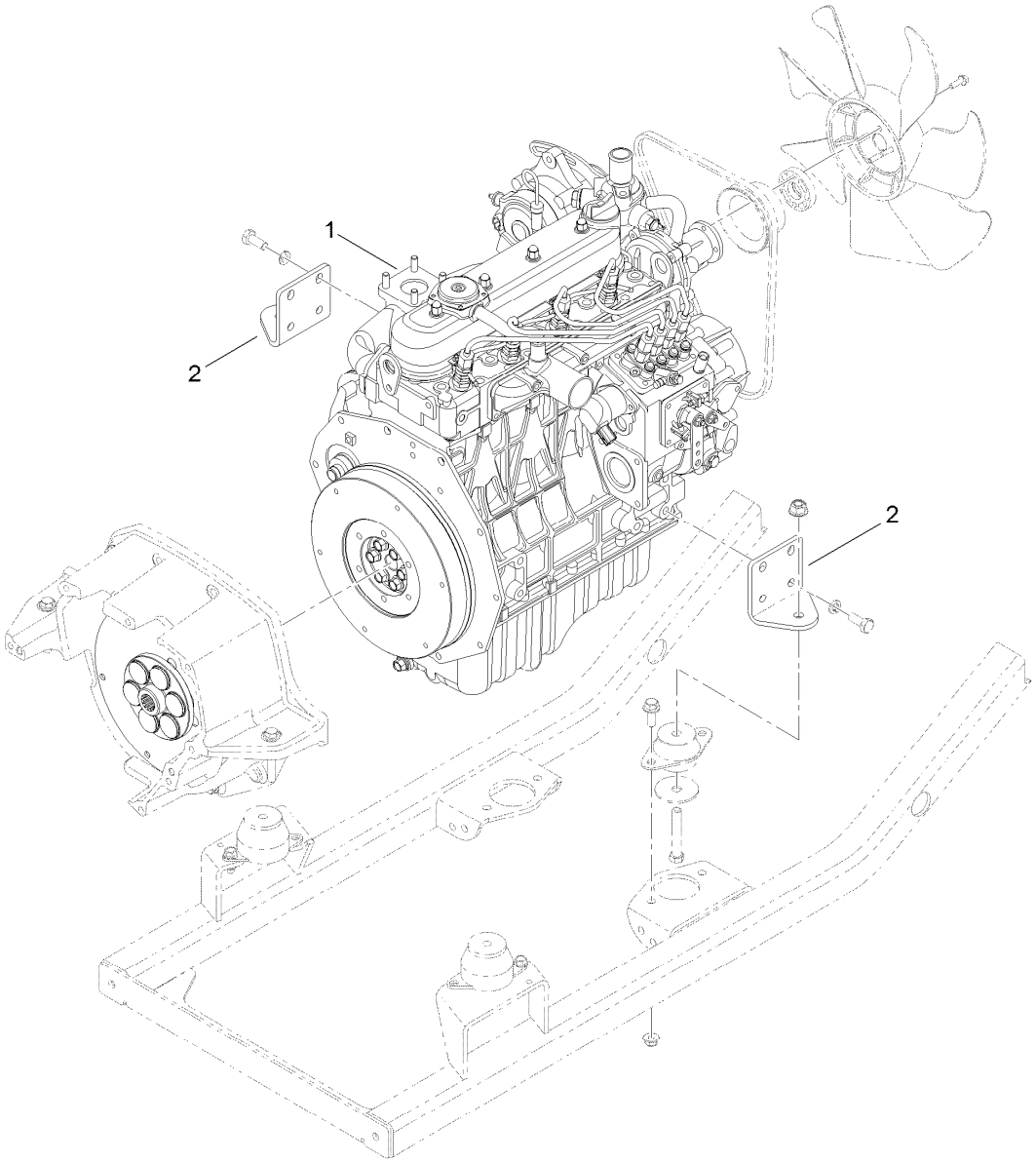


# Engine Assembly

| Ref. | Part Number | Qty. | Description |
|---|---|---|---|
| 1 | | 1 | Engine-Kubota, V1505-E3B-Toro-3 ● |
| 2 | 115-0059-03 | 2 | Plate-Mount, Motor |

● Not serviced separately

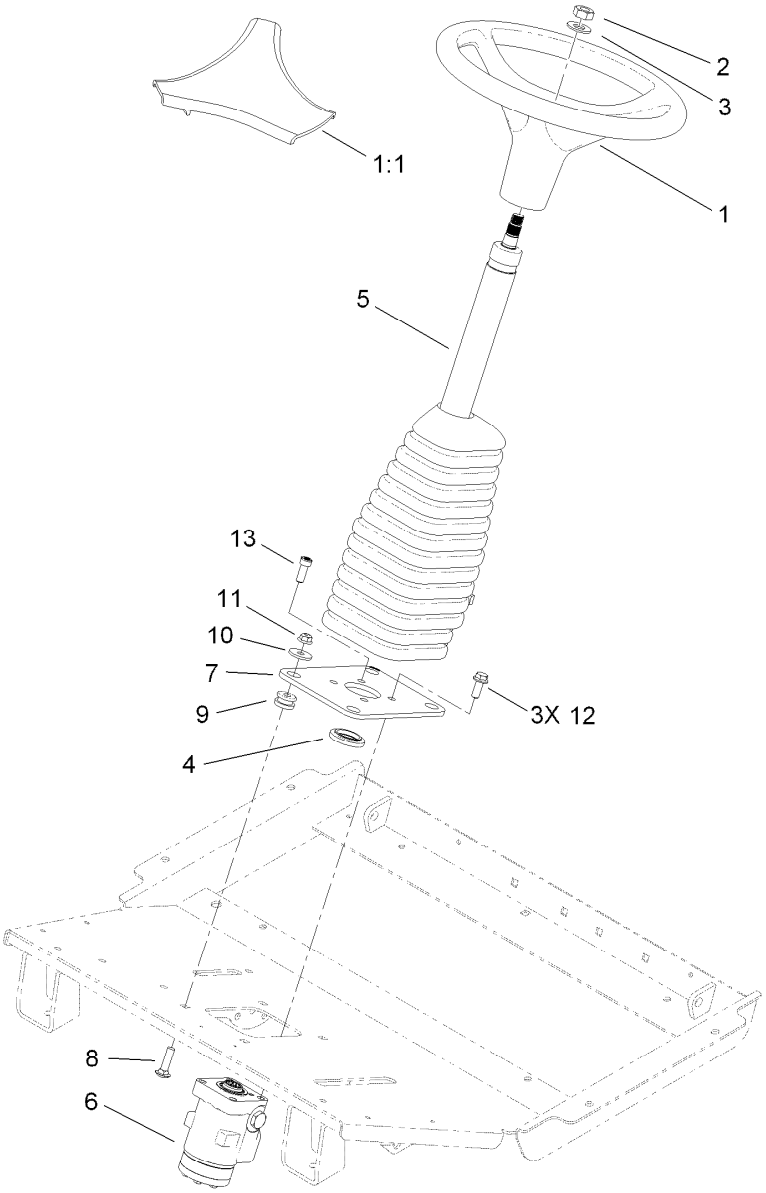


# Steering Column Assembly

| Ref. | Part Number | Qty. | Description |
|---|---|---|---|
| 1 | 98-1471 | 1 | Wheel-Steering |
| 1:1 | 98-1468 | 1 | Cover-Wheel, Steering |
| 2 | 3296-33 | 1 | Nut-Lock, NI |
| 3 | 3256-27 | 1 | Washer-Flat |
| 4 | 117-3373 | 1 | Bushing-Alignment |
| 5 | 117-3371 | 1 | Column-Steering |
| 6 | 117-3265 | 1 | Valve-Steering |
| 7 | 117-3234-03 | 1 | Plate-Steering |
| 8 | 3231-26 | 4 | Screw-CARR |
| 9 | 63-9750 | 4 | Mount |
| 10 | 63-8410 | 4 | Washer |
| 11 | 104-8301 | 4 | Nut-Flange, NI |
| 12 | 108-1531 | 3 | Screw-HHF |
| 13 | 3273-41 | 1 | Screw-HSH |

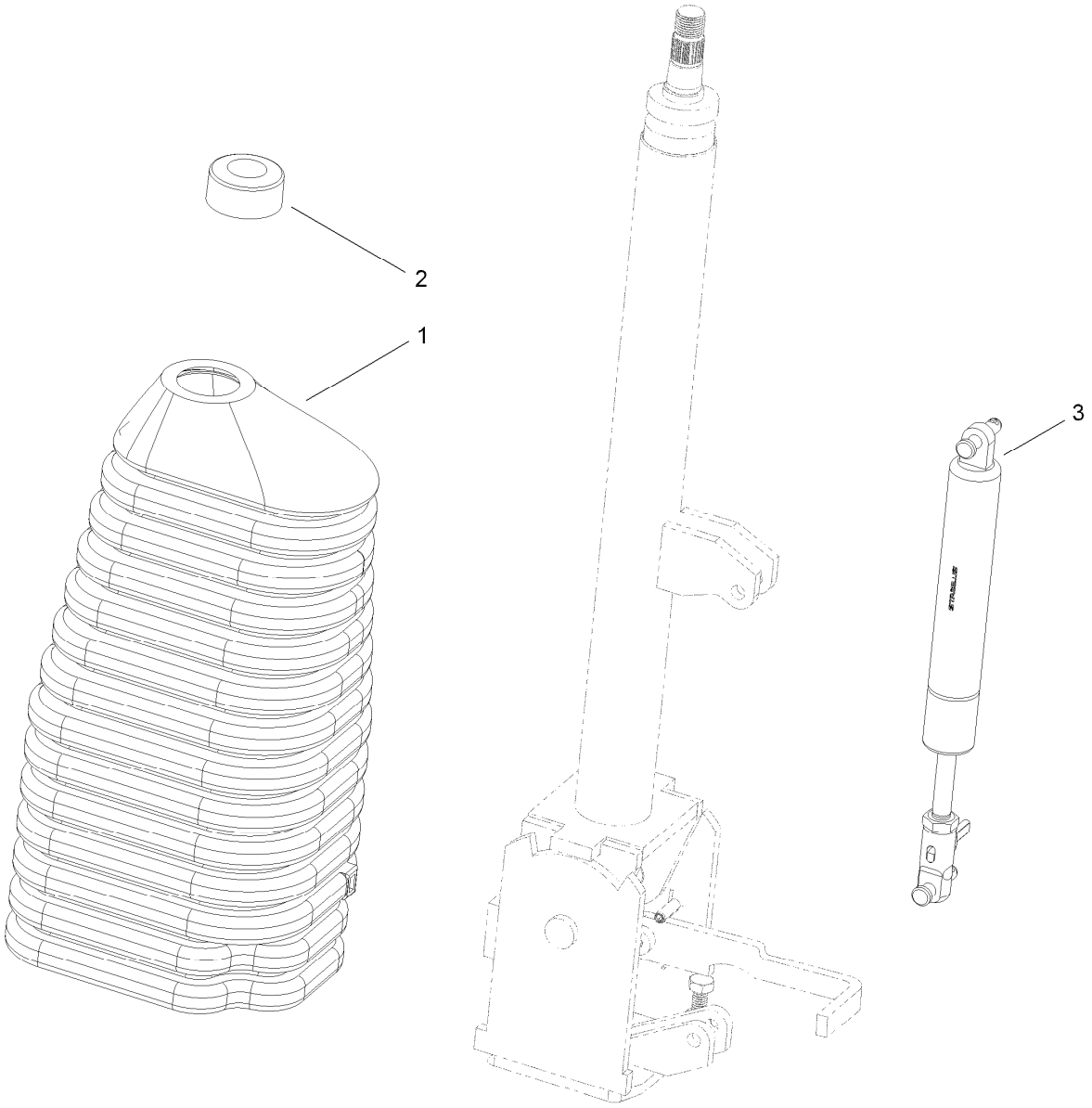


# Steering Column Assembly No. 117-3371

| *Ref.* | *Part Number* | *Qty.* | *Description* |
|---|---|---|---|
| 1 | 120-2592 | 1 | Boot-Rubber, Column |
| 2 | 120-2593 | 1 | Boot-Rubber, Bearing |
| 3 | 120-2594 | 1 | Gas Spring ASM |

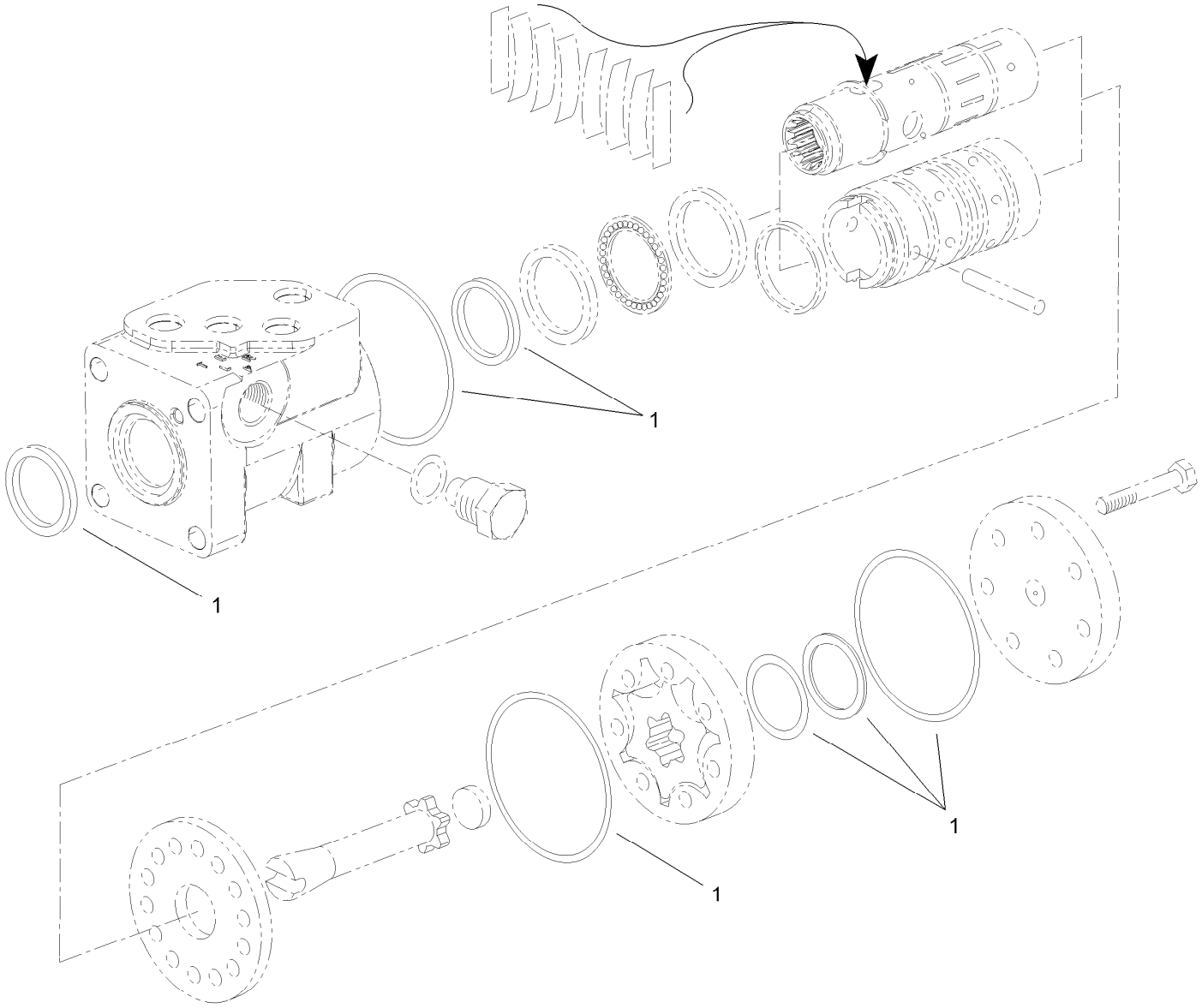


# Steering Valve Assembly No. 117-3265

| *Ref.* | *Part Number* | *Qty.* | *Description* |
|---|---|---|---|
| 1 | 108-1519 | 1 | Seal Kit |

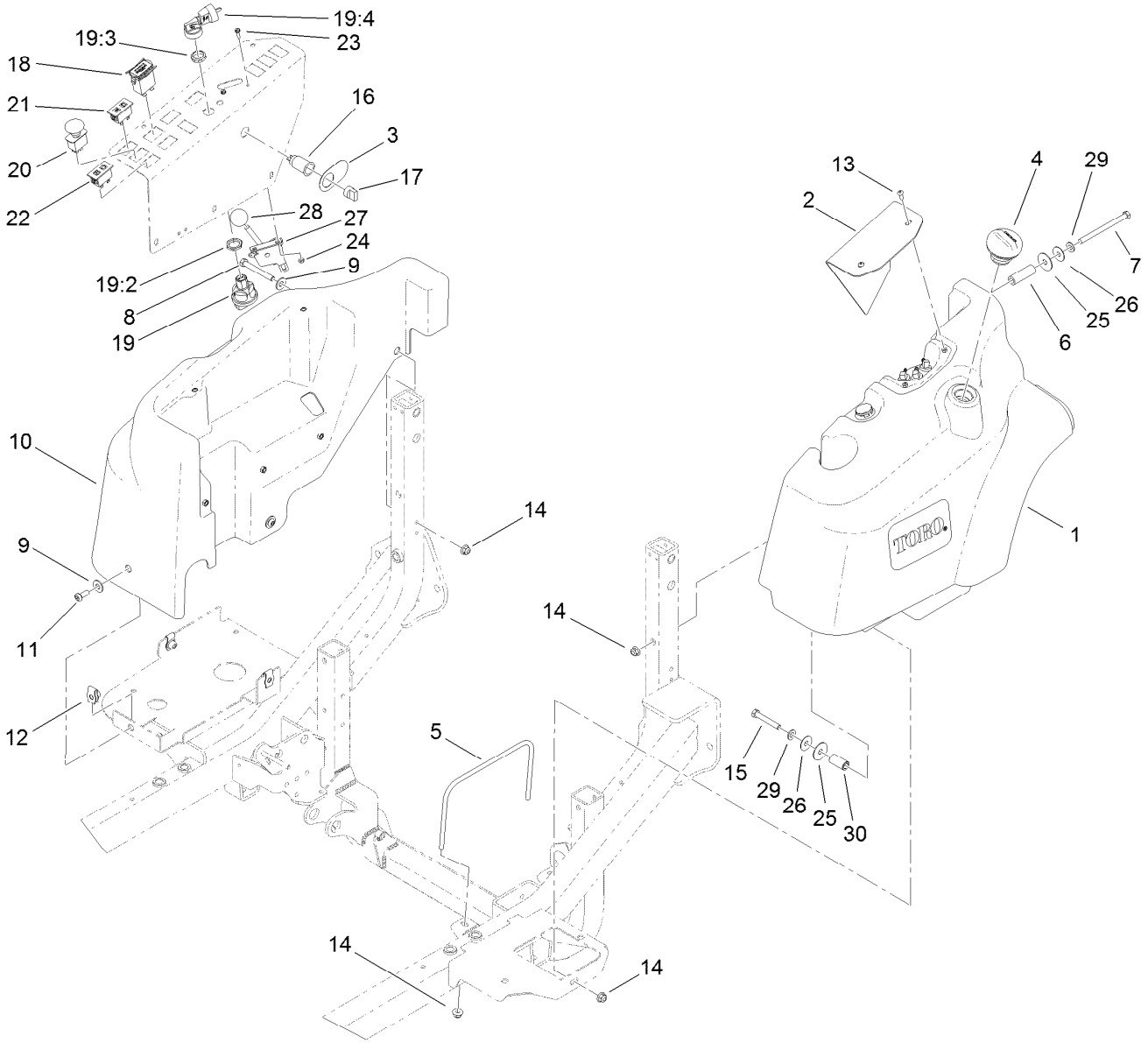


# Fuel Tank and Control Panel Component Assembly

| Ref. | Part Number | Qty. | Description |
|---|---|---|---|
| 1 | 120-0255 | 1 | Fuel Tank ASM |
| 2 | 117-3359-03 | 1 | Plate-Cover |
| 3 | 106-2353 | 1 | Decal-Powerpoint |
| 4 | 115-5305 | 1 | Cap-Fuel |
| 5 | 117-3394 | 1 | Bracket-Tank |
| 6 | 117-3387 | 1 | Tube-Spacer |
| 7 | 323-39 | 1 | Screw-HH |
| 8 | 323-14 | 1 | Screw-HH |
| 9 | 100-7403 | 4 | Washer-Flat |
| 10 | 117-3353 | 1 | Cover-Tank, HYD |
| 11 | 3274-94 | 3 | Screw-HSBH |
| 12 | 105-4886 | 3 | Nut-Tinnerman |
| 13 | 3274-31 | 2 | Screw-HSBH |
| 14 | 104-8301 | 5 | Nut-Flange, NI |
| 15 | 323-12 | 1 | Screw-HH |
| 16 | 99-7411 | 1 | Point-Power |
| 17 | 99-7416 | 1 | Cap |

| Ref. | Part Number | Qty. | Description |
|---|---|---|---|
| 18 | 1-513374 | 1 | Meter-Hour |
| 19 | 121-5159 | 1 | Ignition Switch ASM |
| 19:1 | | 1 | Switch-Ignition ■ ● |
| 19:2 | 121-5160 | 1 | Nut-Hex |
| 19:3 | 121-5161 | 1 | Nut-Face |
| 19:4 | 121-5162 | 1 | Ignition Key Set |
| 20 | 95-4108 | 1 | Switch-PTO |
| 21 | 100-8070 | 1 | Lamp-Warning |
| 22 | 100-8071 | 1 | Lamp-Warning |
| 23 | 32105-13 | 2 | Screw-HWH |
| 24 | 3296-2 | 2 | Nut-Lock, NI |
| 25 | 95-1905 | 2 | Washer-Rubber |
| 26 | 105-6814 | 2 | Washer-Plain |
| 27 | 110-5547 | 1 | Control Lever ASM |
| 28 | 233-42 | 1 | Knob |
| 29 | 3256-24 | 2 | Washer-Flat |
| 30 | 110-3726 | 1 | Spacer |

● Not illustrated

■ Not serviced separately

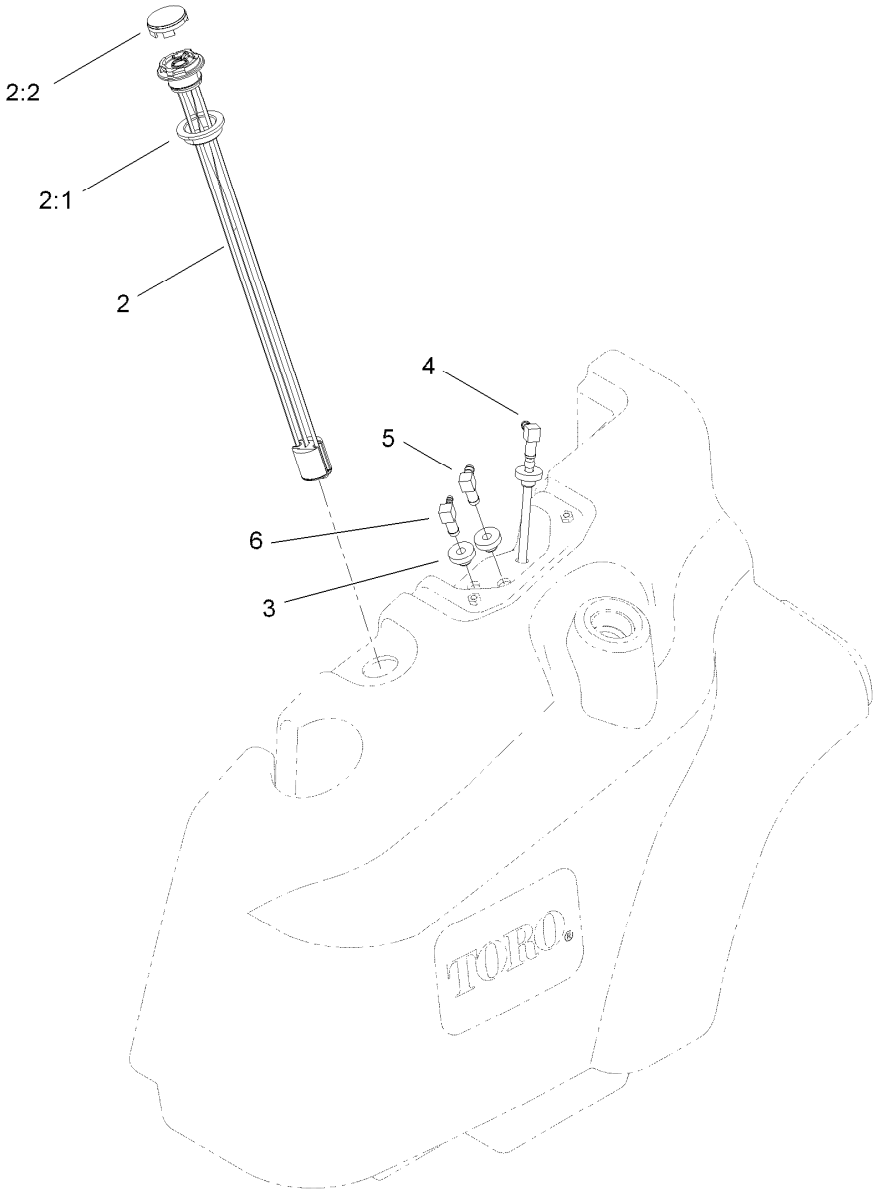


# Fuel Tank Assembly No. 120-0255

| *Ref.* | *Part Number* | *Qty.* | *Description* |
|---|---|---|---|
| 2 | 117-3238 | 1 | Gauge-Fuel |
| 2:1 | 119-0508 | 1 | Seal |
| 2:2 | 117-8404 | 1 | Dial-Gauge |
| 3 | 46-6560 | 3 | Bushing |
| 4 | 117-3370 | 1 | Pipe-Stand |
| 5 | 46-6550 | 1 | Fitting-Elbow, 90 DEG |
| 6 | 104-5228 | 1 | Fitting-Elbow, 90 DEG |

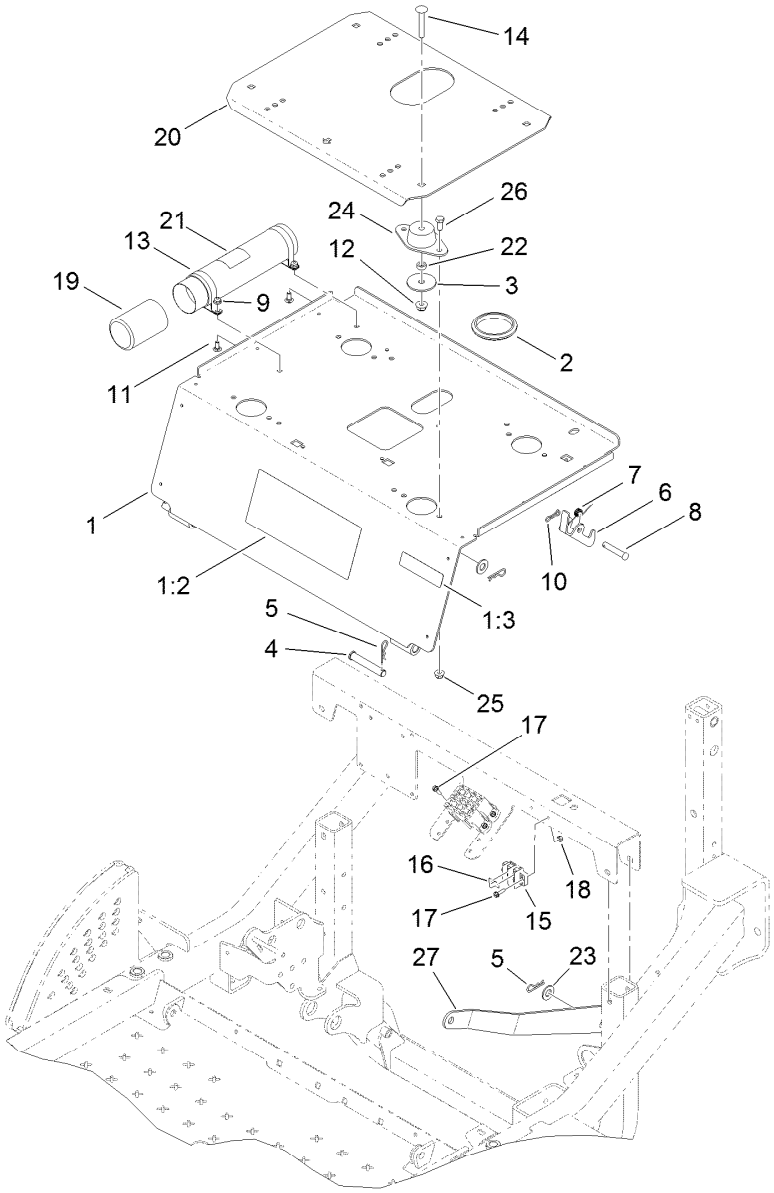


# Seat Plate Assembly

| Ref. | Part Number | Qty. | Description |
|---|---|---|---|
| 1 | 120-0244 | 1 | Seat Plate ASM |
| 1:2 | 117-3273 | 1 | Decal-Operation, Warning |
| 1:3 | 117-2718 | 1 | Decal-Arrester, Spark |
| 2 | 237-164 | 1 | Grommet |
| 3 | 83-1040 | 4 | Washer-Flat |
| 4 | 283-55 | 2 | Pin-Clevis |
| 5 | 3290-467 | 4 | Pin-Hair |
| 6 | 117-3067 | 1 | Latch-Seat |
| 7 | 104-4821 | 1 | Spring-Torsion |
| 8 | 283-82 | 1 | Pin-Clevis |
| 9 | 104-7201 | 2 | Nut-HF |
| 10 | 119-1415 | 1 | Pin-Cotter, Locking |
| 11 | 3229-1 | 2 | Screw-CARR |
| 12 | 104-8301 | 4 | Nut-Flange, NI |
| 13 | 107-1865 | 2 | R-Clamp |

| Ref. | Part Number | Qty. | Description |
|---|---|---|---|
| 14 | 3231-40 | 4 | Bolt-CARR,Shrt Neck |
| 15 | 42862 | 1 | Block-Terminal, Ground |
| 16 | 42863 | 1 | Strip-Jumper |
| 17 | 32105-13 | 4 | Screw-HWH |
| 18 | 3296-2 | 4 | Nut-Lock, NI |
| 19 | 104-7048 | 1 | Cap-Housing |
| 20 | 117-3065-03 | 1 | Plate-Seat |
| 21 | 104-7050 | 1 | Tube-Manual |
| 22 | 83-1050 | 4 | Spacer |
| 23 | 3256-26 | 2 | Washer-Flat |
| 24 | 83-1030 | 4 | Mount-Engine |
| 25 | 104-8300 | 8 | Nut-Flange, NI |
| 26 | 322-3 | 8 | Screw-HH |
| 27 | 120-0242-01 | 1 | Strap-Prop |

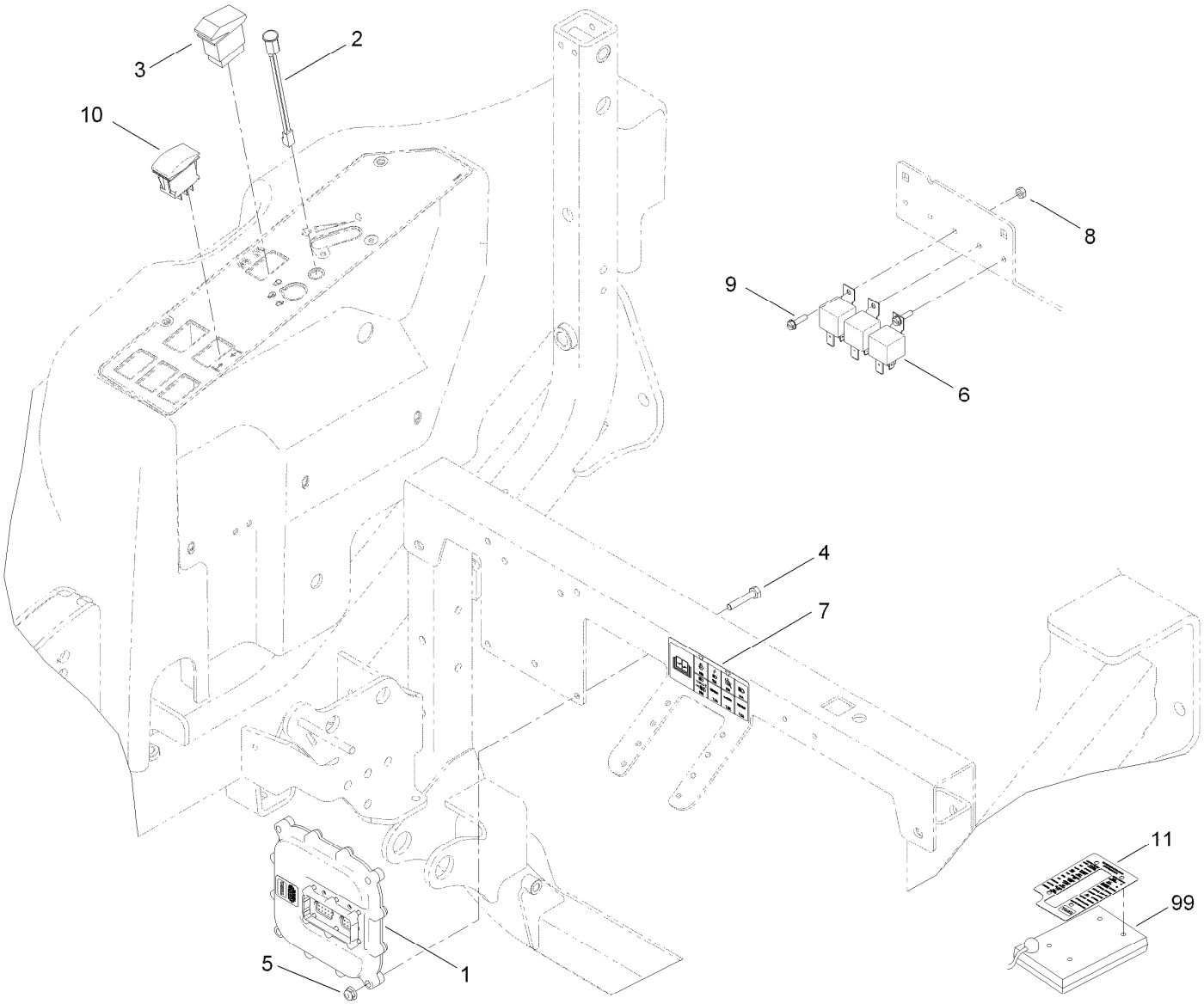


# 4 Wheel Drive Module Control and Relay Assembly

| *Ref.* | *Part Number* | *Qty.* | *Description* |
|---|---|---|---|
| 1 | 115-1900 | 1 | Controller ASM (Tec-5001) |
| 2 | 95-7652 | 1 | Light-Indicator |
| 3 | 100-8490 | 1 | Switch-Rocker |
| 4 | 321-13 | 4 | Screw-HH |
| 5 | 104-7201 | 4 | Nut-HF |
| 6 | 99-7435 | 3 | Relay-Power |
| 7 | 117-3233 | 1 | Decal-Fuseblock |
| 8 | 3296-2 | 3 | Nut-Lock, NI |
| 9 | 32105-13 | 3 | Screw-HWH |
| 10 | 100-1535 | 1 | Switch |
| 11 | 120-0273 | 1 | Decal-Diagnostic, Master |
| 99 | 85-4750 | 1 | Box-Display, Diagnostic |

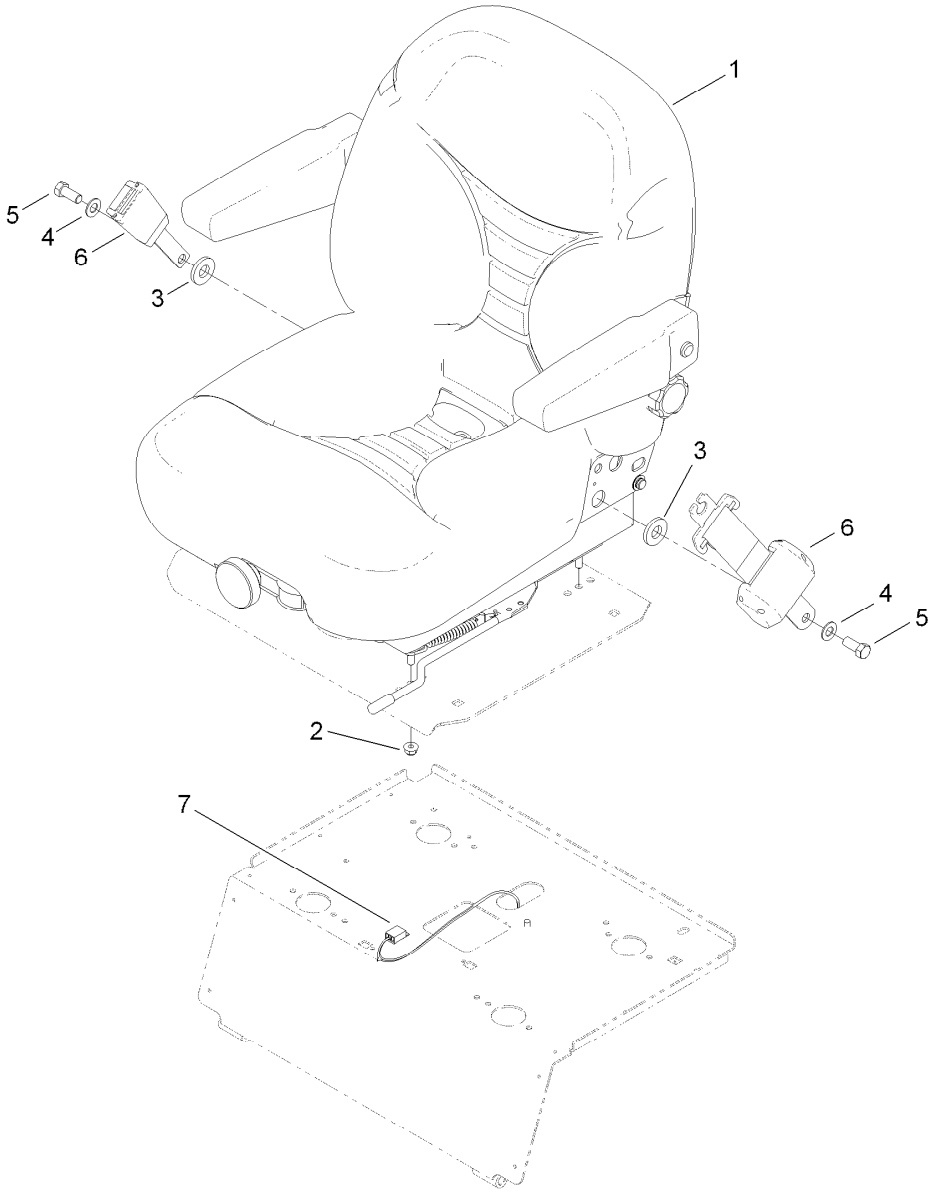


# Seat Assembly

| Ref. | Part Number | Qty. | Description |
|---|---|---|---|
| 1 | 107-2286 | 1 | Seat ASM |
| 2 | 104-8300 | 4 | Nut-Flange, NI |
| 3 | 99-7667 | 2 | Washer-Flat |
| 4 | 3256-25 | 2 | Washer-Flat |
| 5 | 3212-4 | 2 | Screw-HH |
| 6 | 110-0413 | 1 | Seatbelt-Retractable |
| 7 | 119-5786 | 1 | Harness-Wire, Seat-Standard |

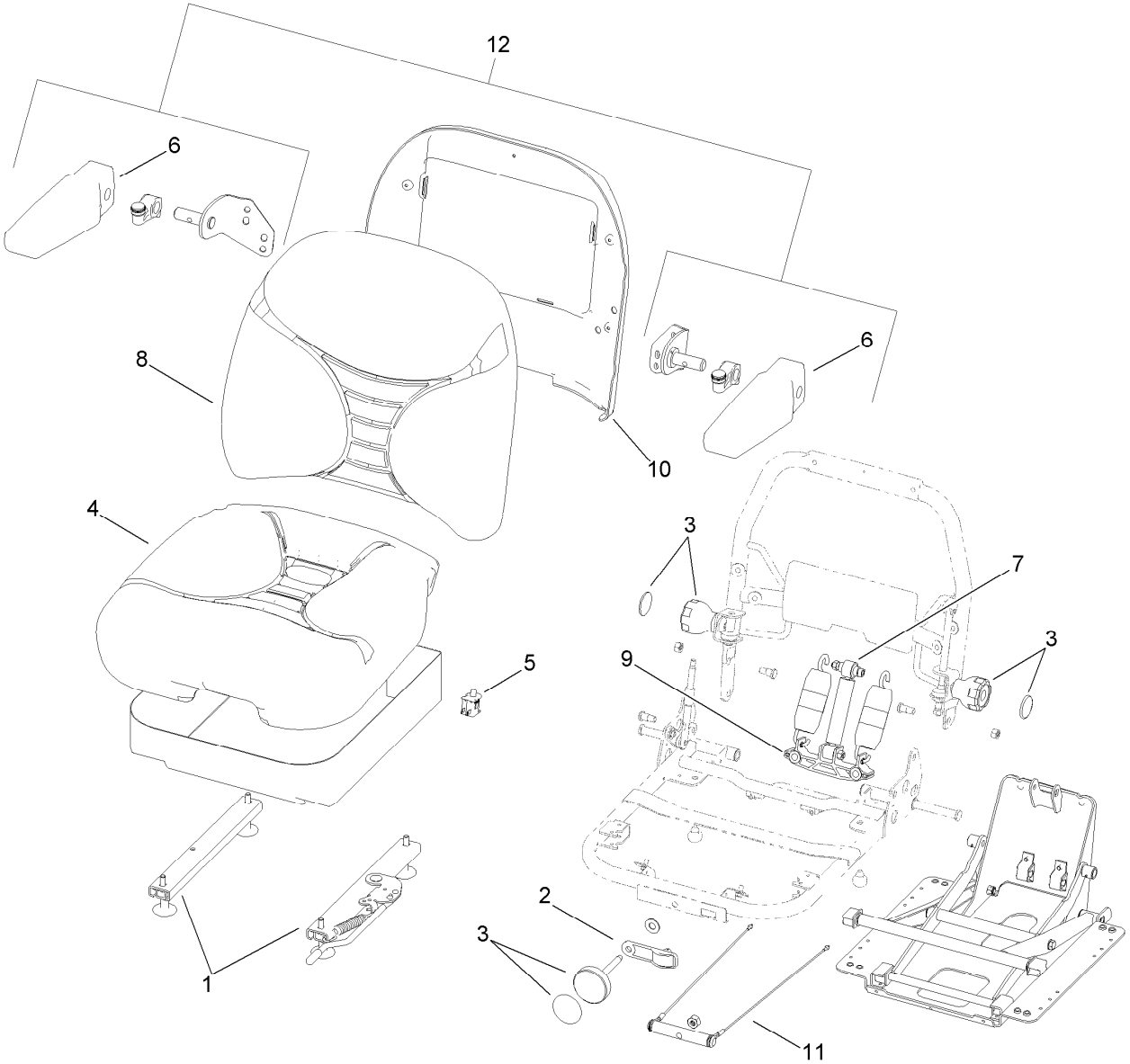


# Seat Assembly No. 107-2286

| *Ref.* | *Part Number* | *Qty.* | *Description* |
|---|---|---|---|
| 1 | 107-1880 | 1 | Seat Track Kit |
| 2 | 107-1885 | 1 | Weight Indicator Kit |
| 3 | 107-1881 | 1 | Knob Kit |
| 4 | 107-1883 | 1 | Bottom Cushion Kit |
| 5 | 82-2190 | 1 | Switch-Bail |
| 6 | 107-1887 | 2 | Pad-Armrest |
| 7 | 107-1884 | 1 | Shock Absorber Kit |
| 8 | 107-1882 | 1 | Back Cushion Kit |
| 9 | 109-3343 | 1 | Spring And Saddle Kit |
| 10 | 109-3344 | 1 | Back Panel Kit |
| 11 | 109-3345 | 1 | Weight Adjust Kit |
| 12 | 121-9415 | 1 | Armrest Kit |

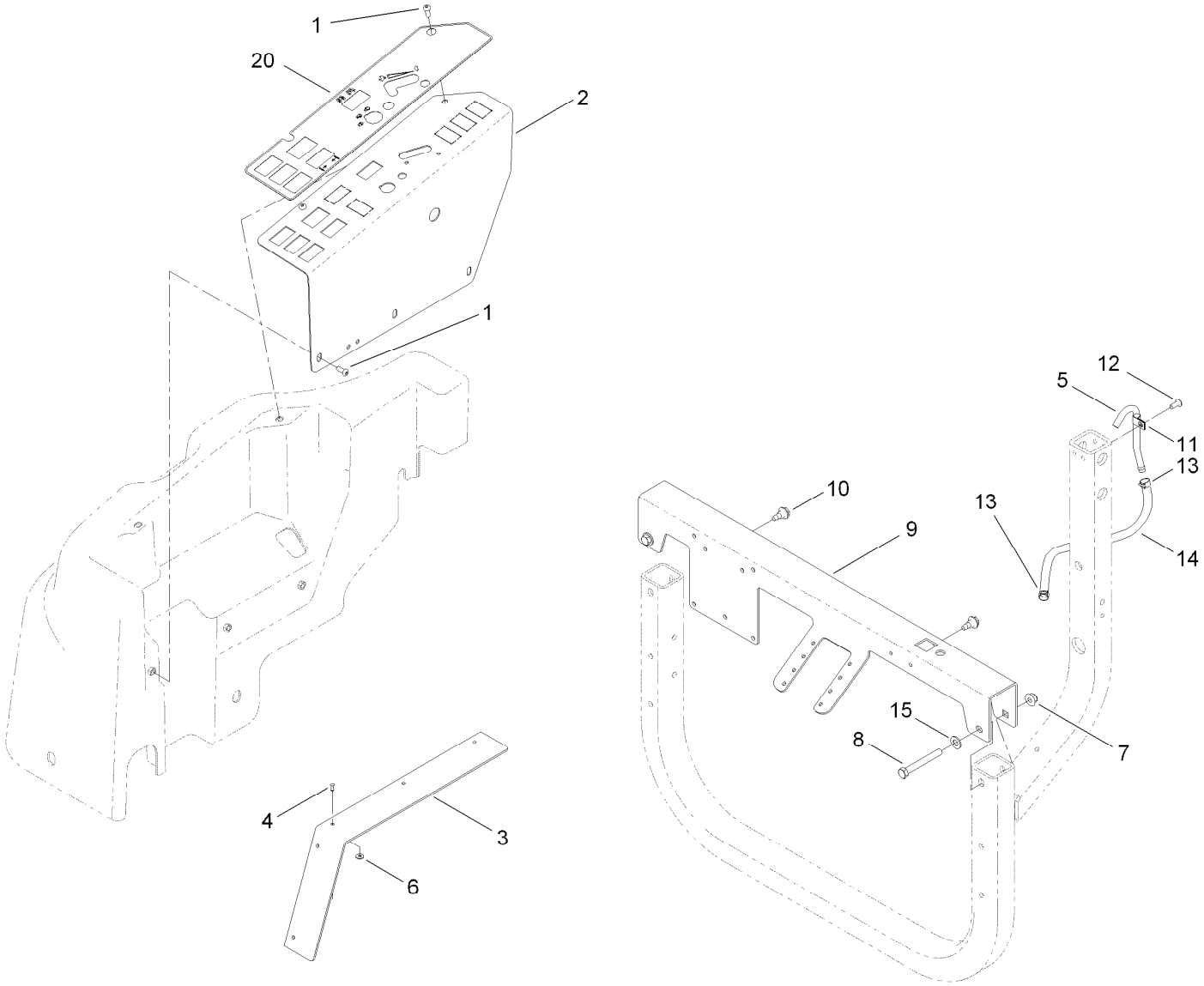


# Seat Platform Assembly

| Ref. | Part Number | Qty. | Description |
|---|---|---|---|
| 1 | 3274-31 | 5 | Screw-HSBH |
| 2 | 121-5352-03 | 1 | Panel-Control, Tank |
| 3 | 117-3175 | 2 | Strap-Filler |
| 4 | 3290-282 | 10 | Rivet-Blind |
| 5 | 120-6820 | 1 | Tube-Vent |
| 6 | 3269-26 | 10 | Washer-Plain |
| 7 | 104-8301 | 2 | Nut-Flange, NI |
| 8 | 323-14 | 2 | Screw-HH |

| Ref. | Part Number | Qty. | Description |
|---|---|---|---|
| 9 | 117-3064-03 | 1 | Channel-Seat |
| 10 | 99-5105 | 2 | Bolt-Shoulder |
| 11 | 2412-89 | 1 | Clamp-R |
| 12 | 3290-412 | 1 | Rivet |
| 13 | 92-2379 | 2 | Clamp-Hose |
| 14 | 110-4101 | 1 | Hose-Fuel |
| 15 | 3256-24 | 2 | Washer-Flat |
| 20 | 117-3277 | 1 | Decal-Control Panel, 4Wd |

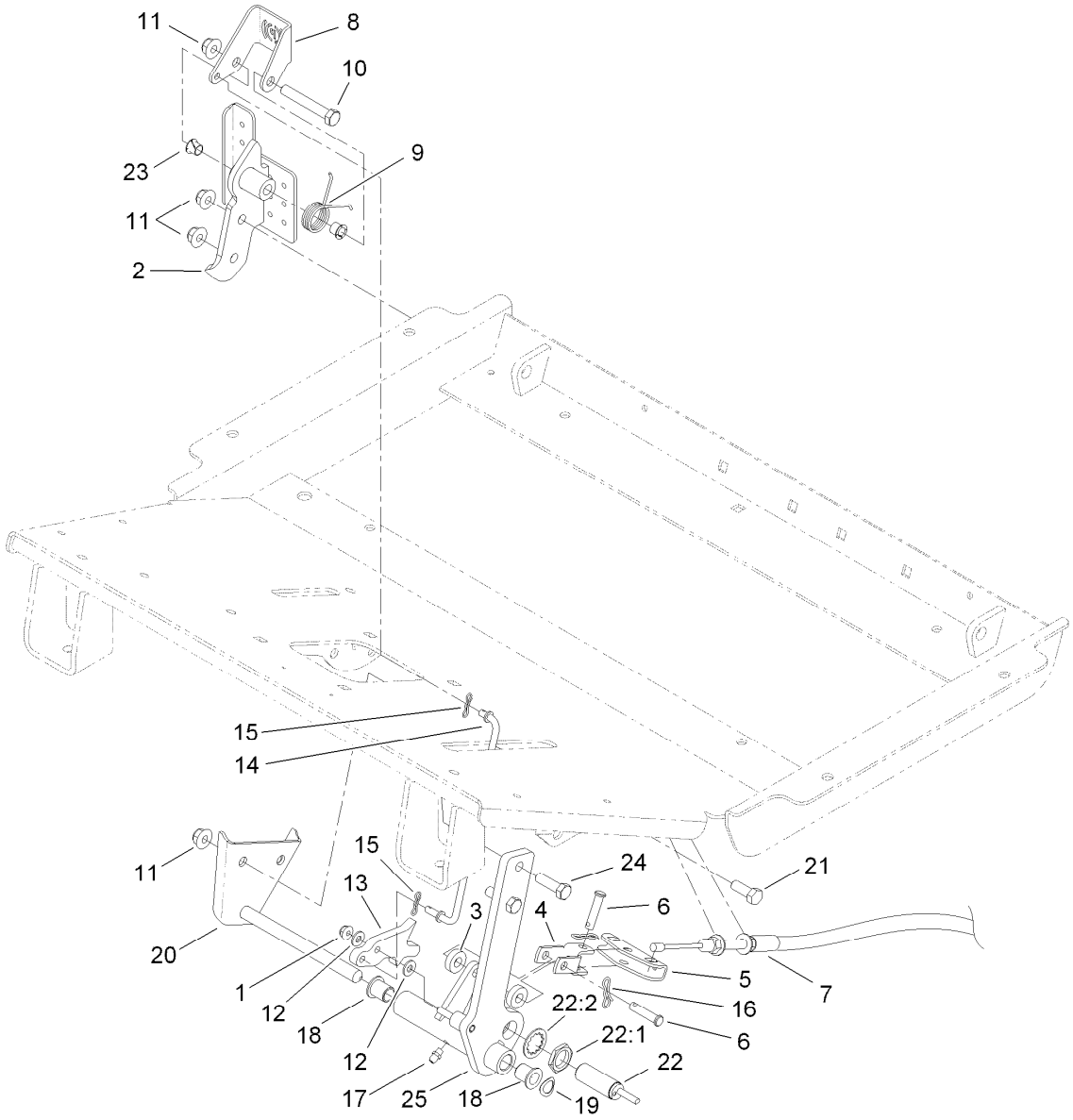


# Brake Pedal Assembly

| Ref. | Part Number | Qty. | Description |
|---|---|---|---|
| 1 | 104-7201 | 1 | Nut-HF |
| 2 | 119-1403-03 | 1 | Brake Pedal ASM |
| 3 | 5-0652 | 2 | Spacer |
| 4 | 115-8060 | 1 | Clevis-Double |
| 5 | 115-8059 | 1 | Yoke-Cable |
| 6 | 283-14 | 2 | Pin-Clevis |
| 7 | 117-3214 | 2 | Cable-Brake |
| 8 | 119-1407 | 1 | Pedal-Park |
| 9 | 99-7140 | 1 | Spring-Torsion |
| 10 | 323-12 | 1 | Screw-HH |
| 11 | 104-8301 | 5 | Nut-Flange, NI |
| 12 | 3256-22 | 2 | Washer-Flat |
| 13 | 119-1406 | 1 | Detent-Brake |
| 14 | 119-1405 | 1 | Rod-Brake Pawl |

| Ref. | Part Number | Qty. | Description |
|---|---|---|---|
| 15 | 119-1414 | 2 | Pin-Cotter, Locking |
| 16 | 119-1415 | 2 | Pin-Cotter, Locking |
| 17 | 302-5 | 1 | Fitting-Grease |
| 18 | 256-155 | 2 | Bushing-Flange |
| 19 | 3290-221 | 1 | Washer-Spring |
| 20 | 119-1388 | 1 | Brake Pin ASM |
| 21 | 323-6 | 2 | Screw-HH |
| 22 | 115-5300 | 1 | Proximity Switch ASM |
| 22:1 | 117-3207 | 2 | Nut-Hex |
| 22:2 | 117-3208 | 2 | Washer-Lock, Int Tooth |
| 23 | 52-2891 | 2 | Bushing-Flanged, Nylon |
| 24 | 323-7 | 2 | Screw-HH |
| 25 | 119-1400-03 | 1 | Brake Lever ASM |

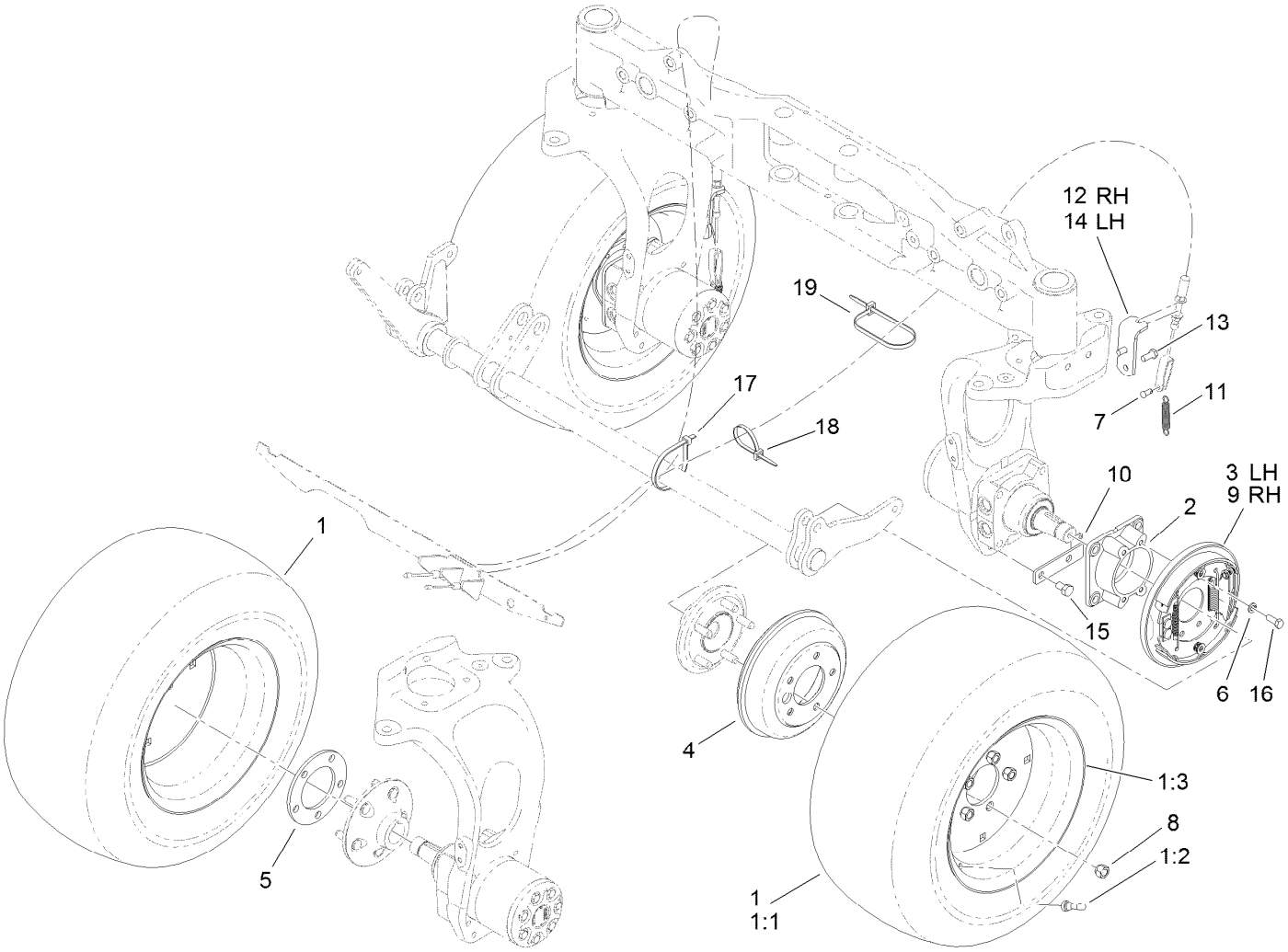


# Wheel and Brake Assembly

| Ref. | Part Number | Qty. | Description |
|---|---|---|---|
| 1 | 117-2900 | 4 | Tire And Wheel ASM |
| 1:1 | 117-2901 | 1 | Tire |
| 1:2 | 232-27 | 1 | Stem-Valve |
| 1:3 | 117-2902 | 1 | Rim |
| 2 | 120-0248-03 | 2 | Adapter-Brake |
| 3 | 120-0235 | 1 | LH Brake ASM |
| 4 | 114-8864 | 2 | Drum-Brake (8 Inch) |
| 5 | 115-0199-03 | 2 | Spacer-Wheel |
| 6 | 3253-21 | 8 | Washer-Lock |
| 7 | 283-62 | 2 | Pin-Clevis |
| 8 | 242-50 | 10 | Nut-Lug |

| Ref. | Part Number | Qty. | Description |
|---|---|---|---|
| 9 | 120-0233 | 1 | RH Brake ASM |
| 10 | 115-0132 | 2 | Bracket-Spring, Return |
| 11 | 87-4020 | 2 | Spring-Extension |
| 12 | 119-1352-03 | 1 | Bracket-Brake Cable, RH |
| 13 | 325-2 | 4 | Screw-HH |
| 14 | 119-1449-03 | 1 | Bracket-Brake Cable, LH |
| 15 | 323-5 | 4 | Screw-HH |
| 16 | 323-6 | 8 | Screw-HH |
| 17 | 3334-945 | 1 | Tie-Cable |
| 18 | 3290-378 | 1 | Tie-Cable |
| 19 | 250-5 | 1 | Tie-Cable |

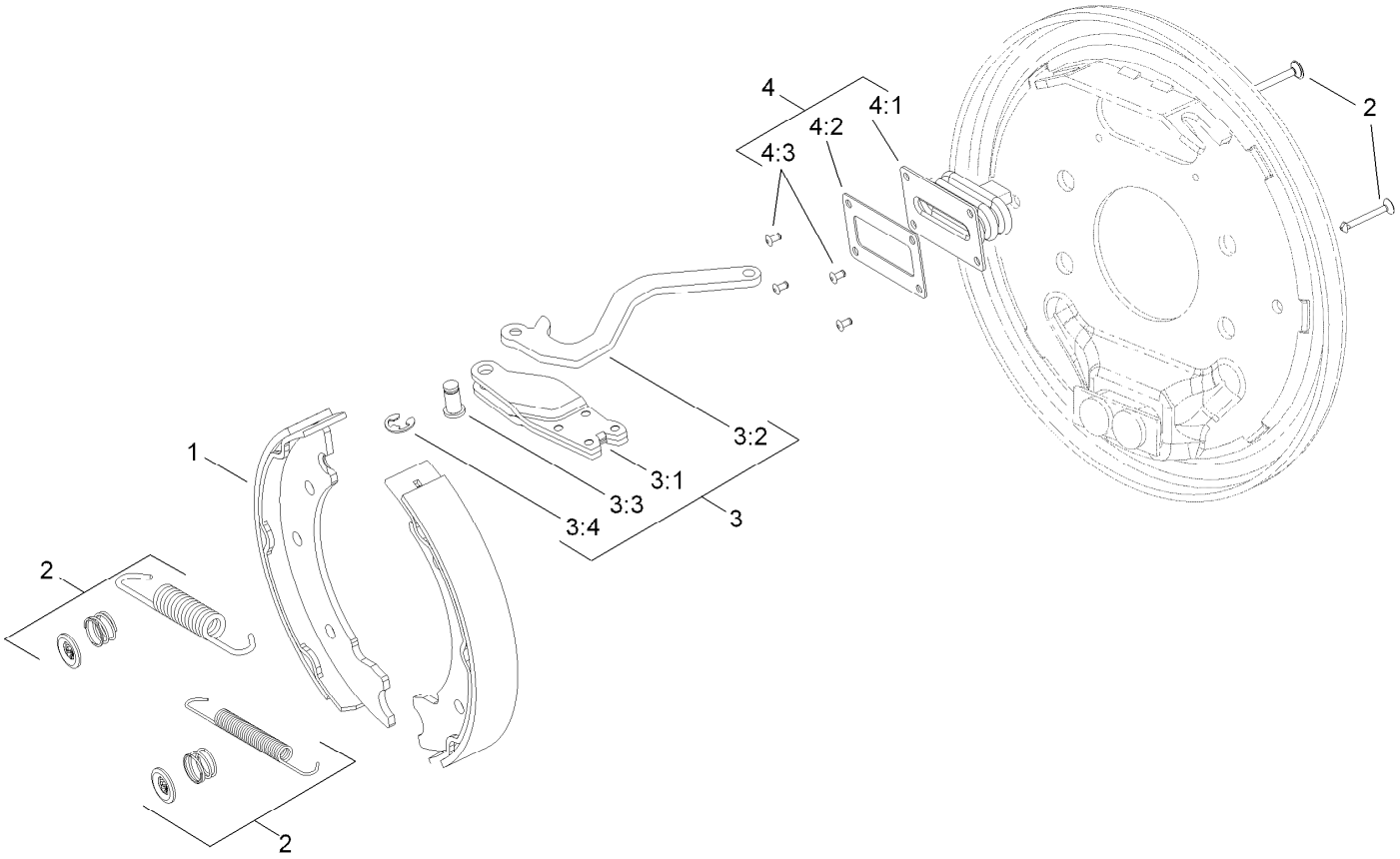


# Left Hand Brake Assembly No. 120-0235

| *Ref.* | *Part Number* | *Qty.* | *Description* |
|---|---|---|---|
| 1 | 108-6981 | 1 | Brake Shoe Kit (8 Inch) |
| 2 | 108-6983 | 1 | Brake Hardware Kit (8 Inch) |
| 3 | 120-0236 | 1 | LH Actuator Kit |
| 3:1 | | 1 | Housing ● |
| 3:2 | | 1 | Lever-LH ● |
| 3:3 | | 1 | Pin-Pivot ● |
| 3:4 | | 1 | E-Ring ● |
| 4 | 110-8885 | 1 | Dust Boot Kit |
| 4:1 | | 1 | Boot ● |
| 4:2 | | 1 | Plate-Back Up ● |
| 4:3 | | 2 | Rivet ● |

● Not serviced separately

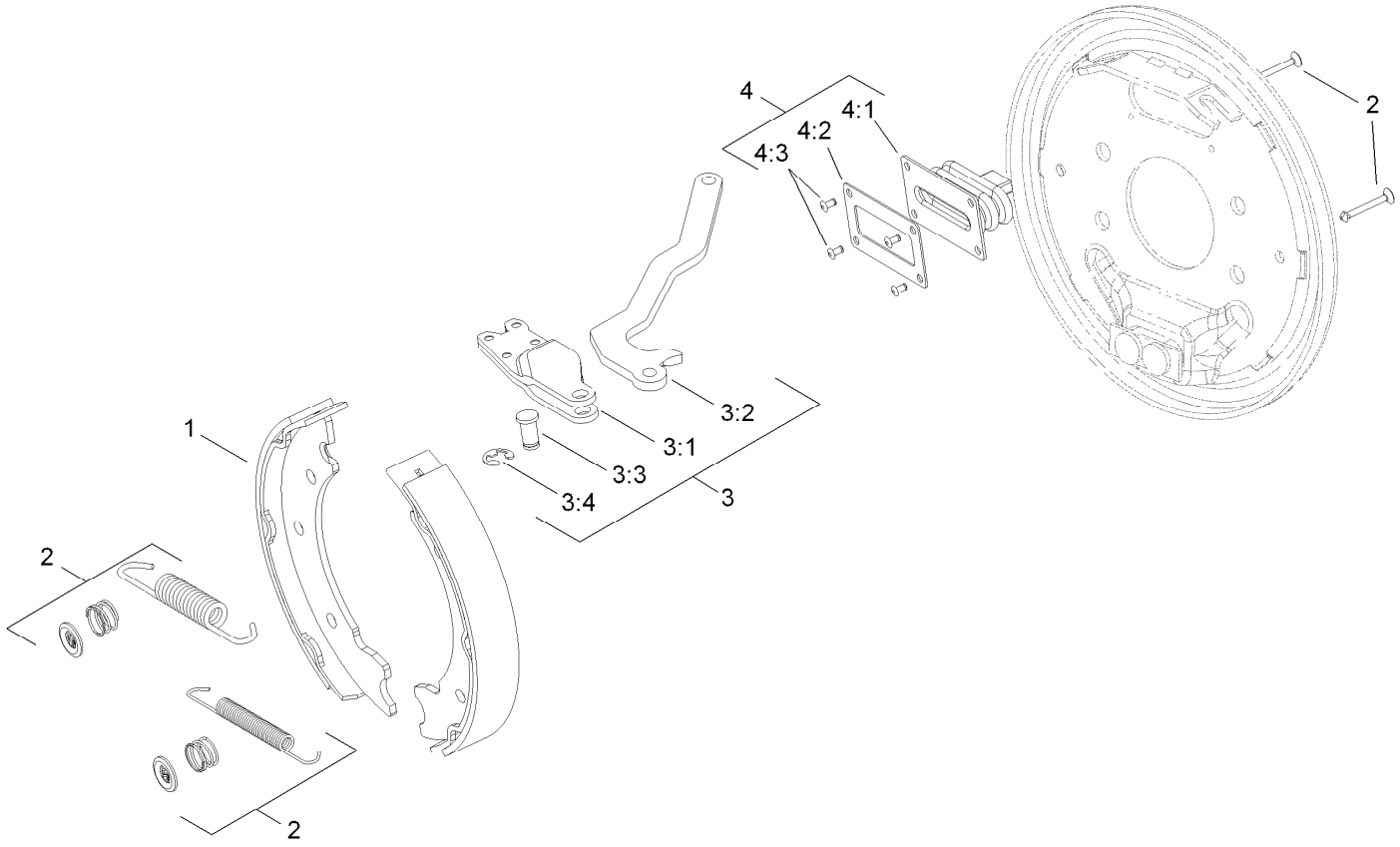


# Right Hand Brake Assembly No. 120-0233

| *Ref.* | *Part Number* | *Qty.* | *Description* |
|---|---|---|---|
| 1 | 108-6981 | 1 | Brake Shoe Kit (8 Inch) |
| 2 | 108-6983 | 1 | Brake Hardware Kit (8 Inch) |
| 3 | 120-0234 | 1 | RH Actuator Kit |
| 3:1 | | 1 | Housing ● |
| 3:2 | | 1 | Lever-RH ● |
| 3:3 | | 1 | Pin-Pivot ● |
| 3:4 | | 1 | E-Ring ● |
| 4 | 110-8885 | 1 | Dust Boot Kit |
| 4:1 | | 1 | Boot ● |
| 4:2 | | 1 | Plate-Back Up ● |
| 4:3 | | 2 | Rivet ● |

● Not serviced separately

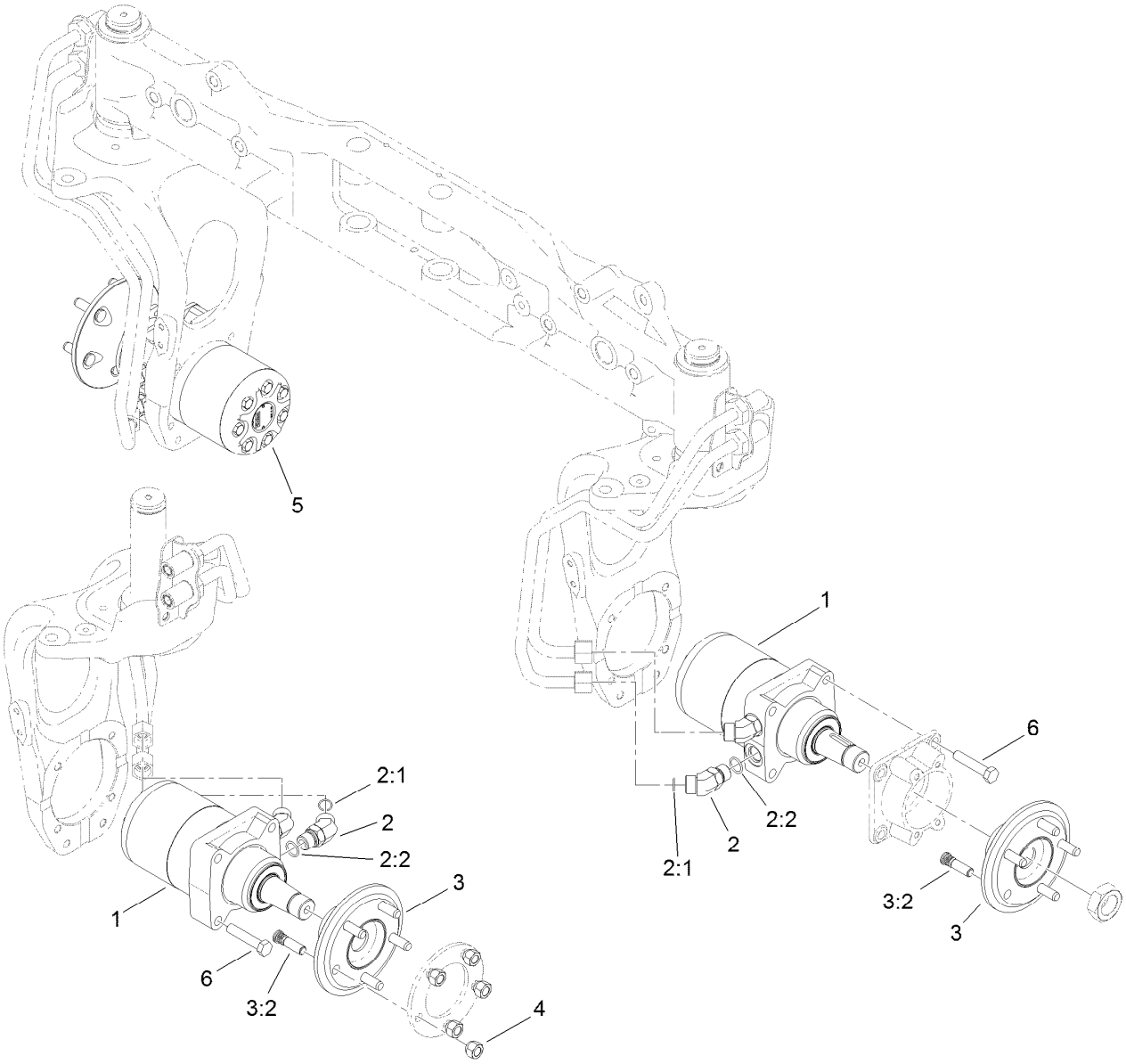


# 4 Wheel Drive Hydraulic Motor and Fitting Assembly

| *Ref.* | *Part Number* | *Qty.* | *Description* |
|---|---|---|---|
| 1 | 117-3284 | 2 | HYD Motor ASM (280 CCW) |
| 2 | 340-14 | 8 | Fitting-HYD, 45 DEG |
| 2:1 | 237-65 | 1 | O-Ring |
| 2:2 | 237-80 | 1 | O-Ring |
| 3 | 120-6739 | 4 | Wheel Hub ASM |
| 3:2 | 114-3918 | 5 | Stud-Wheel |
| 4 | 242-50 | 10 | Nut-Lug |
| 5 | 117-3285 | 2 | HYD Motor ASM (280 CW) |
| 6 | 325-34 | 16 | Screw-HH |

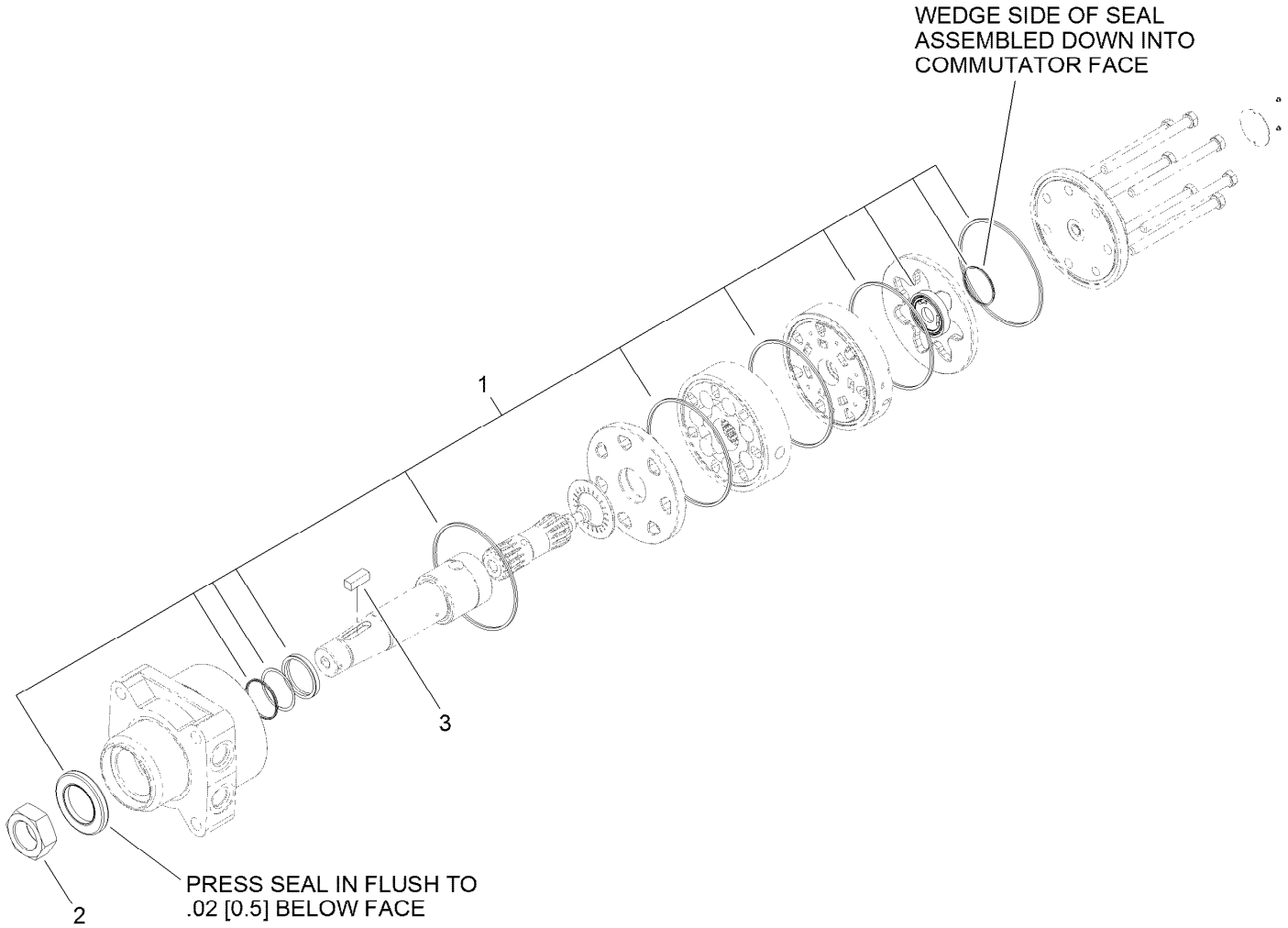


# Hydraulic Motor Assembly No. 117-3284 (CCW)

| *Ref.* | *Part Number* | *Qty.* | *Description* |
|---|---|---|---|
| 1 | 107-9368 | 1 | Seal Kit |
| 2 | 117-3290 | 1 | Nut-Hex |
| 3 | 117-5198 | 1 | Key-Square |

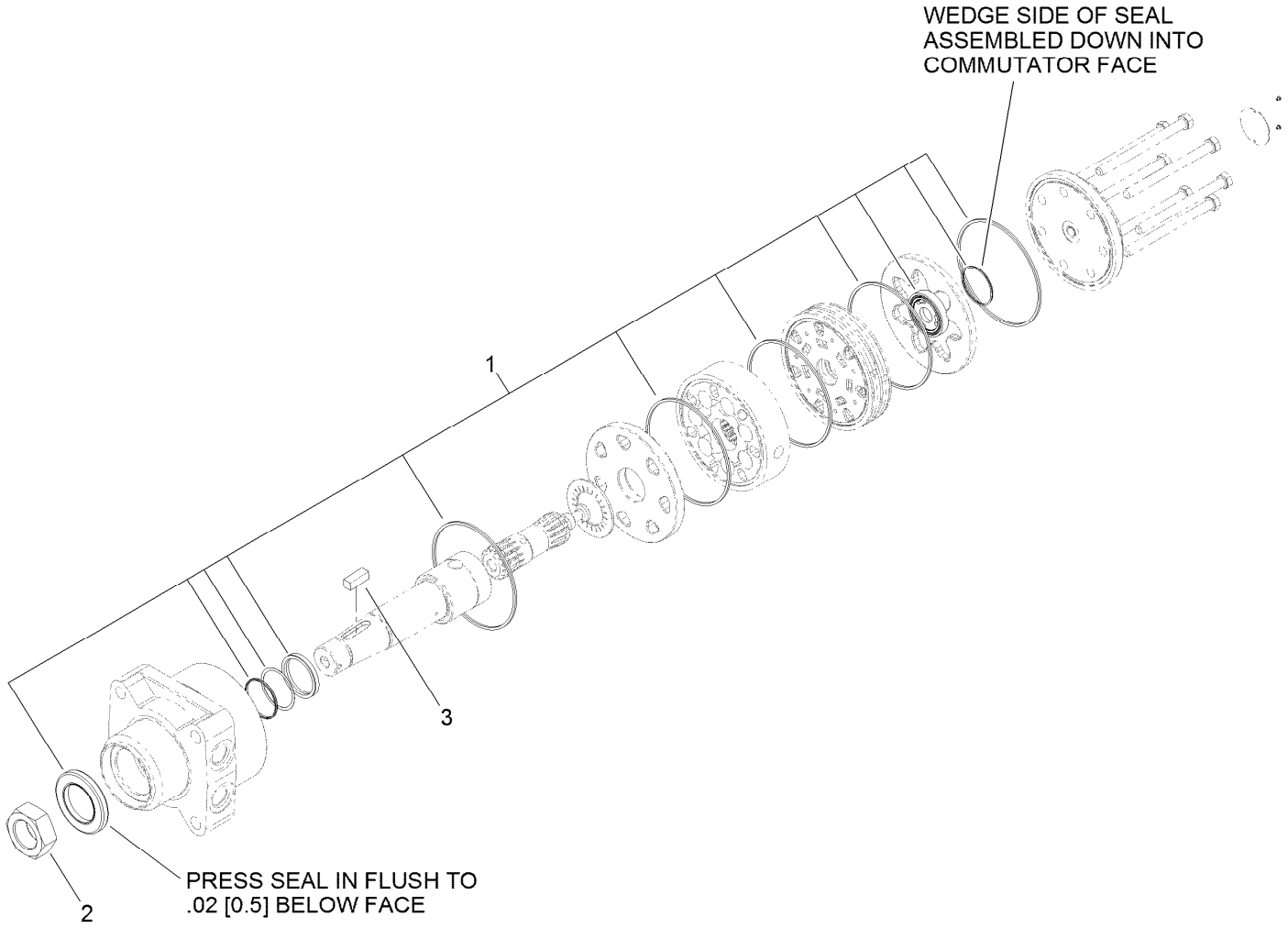


# Hydraulic Motor Assembly No. 117-3285 (CW)

| *Ref.* | *Part Number* | *Qty.* | *Description* |
|---|---|---|---|
| 1 | 107-9368 | 1 | Seal Kit |
| 2 | 117-3290 | 1 | Nut-Hex |
| 3 | 117-5198 | 1 | Key-Square |

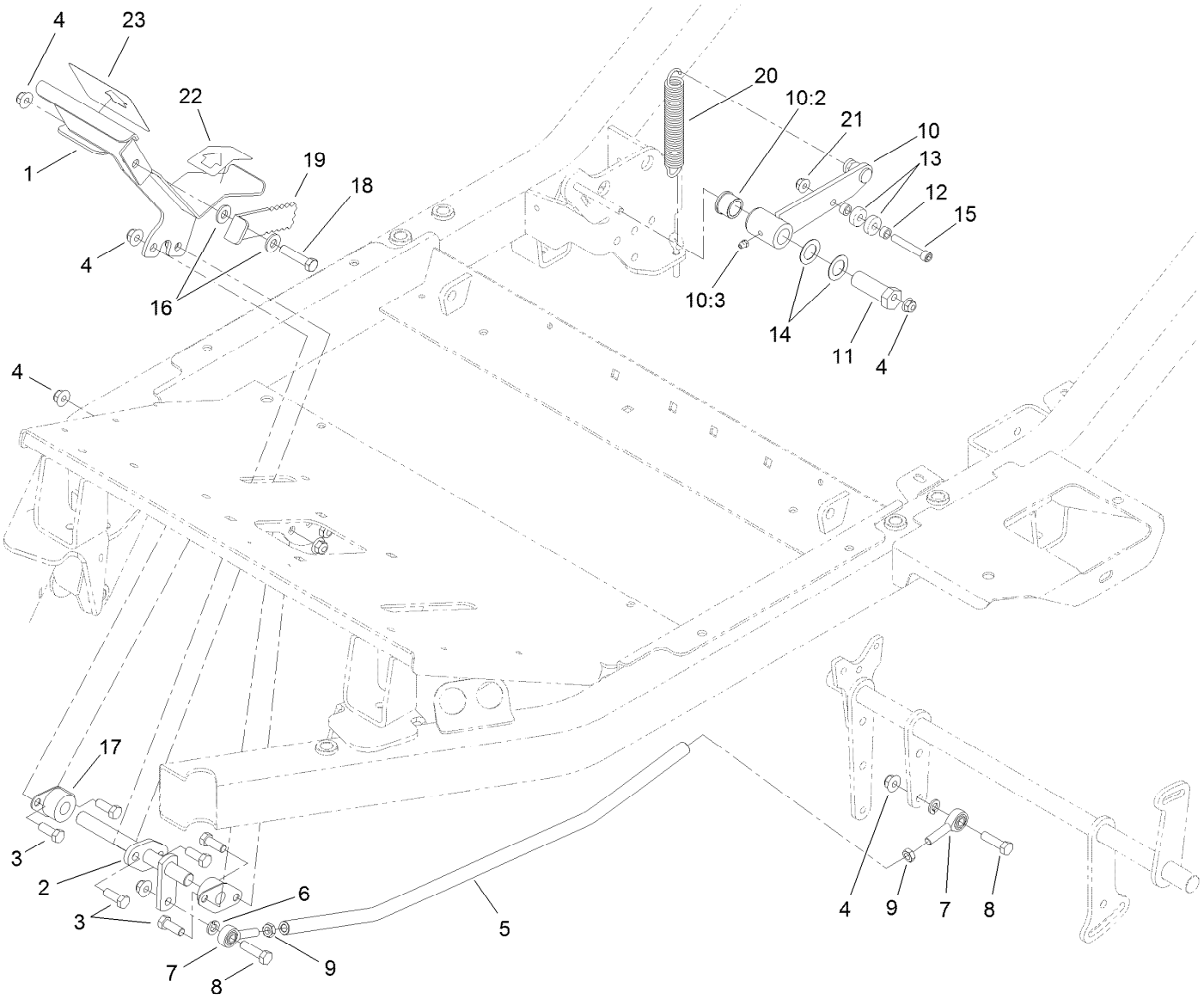


# Neutral and Traction Pedal Assembly

| Ref. | Part Number | Qty. | Description |
|---|---|---|---|
| 1 | 117-3070-01 | 1 | Pedal |
| 2 | 117-3073 | 1 | Pivot-Pedal |
| 3 | 323-6 | 6 | Screw-HH |
| 4 | 104-8301 | 10 | Nut-Flange, NI |
| 5 | 115-0072-03 | 1 | Rod-Traction |
| 6 | 3253-21 | 2 | Washer-Lock |
| 7 | 2411-36 | 2 | Bearing-End, Rod |
| 8 | 323-29 | 2 | Screw-HH |
| 9 | 3220-3 | 2 | Nut-HJ |
| 10 | 115-0148 | 1 | Arm ASM |
| 10:2 | 256-113 | 2 | Bushing-Flange |
| 10:3 | 302-5 | 1 | Fitting-Grease |
| 11 | 117-9046 | 1 | Stud-Eccentric |

| Ref. | Part Number | Qty. | Description |
|---|---|---|---|
| 12 | 85-9120 | 2 | Spacer-Pivot, Tilt |
| 13 | 251-307 | 2 | Bearing-Ball |
| 14 | 3-6498 | 2 | Washer-Thrust |
| 15 | 3274-86 | 1 | Screw-HSH |
| 16 | 66-2920 | 2 | Washer-Friction |
| 17 | 256-236 | 2 | Bearing-Mount, Flange |
| 18 | 323-9 | 1 | Screw-HH |
| 19 | 117-3298 | 1 | Lever-Mow Stop |
| 20 | 116506 | 1 | Spring-Extension |
| 21 | 104-8300 | 1 | Nut-Flange, NI |
| 22 | 94-3308 | 1 | Pad-Pedal, Traction |
| 23 | 94-3307 | 1 | Pad-Pedal, Traction |

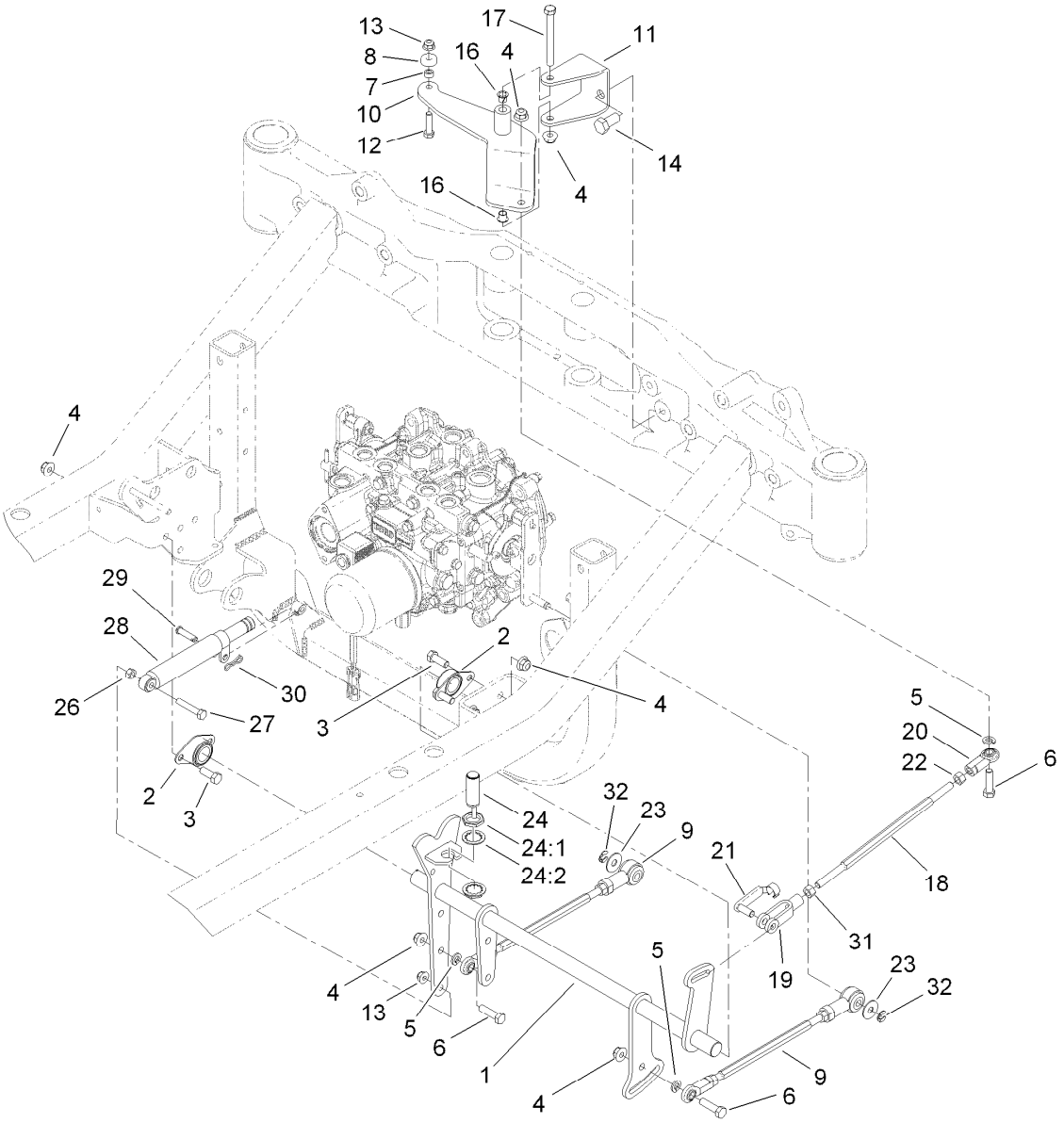


# Traction Pump Linkage Assembly

| Ref. | Part Number | Qty. | Description |
|---|---|---|---|
| 1 | 115-0080-03 | 1 | Speed Control Shaft ASM |
| 2 | 117-3255 | 2 | Bearing-Side Flange |
| 3 | 323-6 | 4 | Screw-HH |
| 4 | 104-8301 | 8 | Nut-Flange, NI |
| 5 | 3253-21 | 3 | Washer-Lock |
| 6 | 323-29 | 3 | Screw-HH |
| 7 | 85-9120 | 1 | Spacer-Pivot, Tilt |
| 8 | 251-307 | 1 | Bearing-Ball |
| 9 | 112-5099 | 2 | Link ASM |
| 10 | 115-0084-03 | 1 | Arm ASM |
| 11 | 119-1351-03 | 1 | Channel-Pivot |
| 12 | 322-6 | 1 | Screw-HH |
| 13 | 104-8300 | 2 | Nut-Flange, NI |
| 14 | 325-4 | 2 | Screw-HH |
| 16 | 52-2891 | 2 | Bushing-Flanged, Nylon |
| 17 | 323-15 | 1 | Screw-HH |

| Ref. | Part Number | Qty. | Description |
|---|---|---|---|
| 18 | 105-7239 | 1 | Rod-Threaded |
| 19 | 1-633131 | 1 | Yoke-Linkage, Brake |
| 20 | 103-1167 | 1 | Joint-Ball End, LH |
| 21 | 103-2399 | 1 | Pin-Spring, Clevis |
| 22 | 3219-20 | 1 | Nut-Hex, LH |
| 23 | 52-2860 | 2 | Washer |
| 24 | 115-5300 | 1 | Proximity Switch ASM |
| 24:1 | 117-3207 | 2 | Nut-Hex |
| 24:2 | 117-3208 | 2 | Washer-Lock, Int Tooth |
| 26 | 3217-6 | 1 | Nut-Hex |
| 27 | 322-9 | 1 | Screw-HH |
| 28 | 76-8870 | 1 | Lever Damper ASM |
| 29 | 283-6 | 1 | Pin-Clevis |
| 30 | 119-1415 | 1 | Pin-Cotter, Locking |
| 31 | 3219-3 | 1 | Nut-Hex |
| 32 | 32151-47 | 2 | Ring-Retaining |

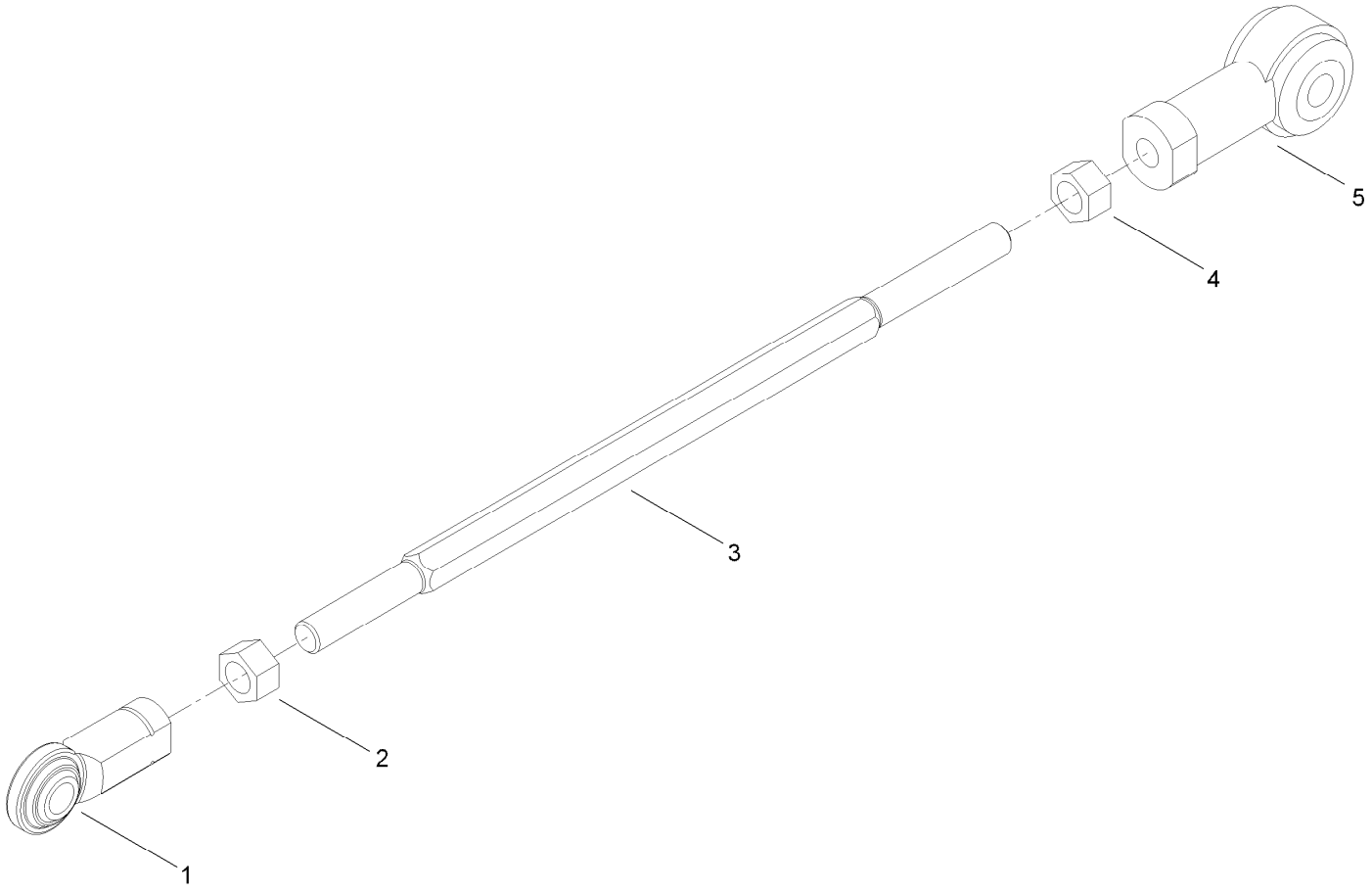


# Link Assembly No. 112-5099

| *Ref.* | *Part Number* | *Qty.* | *Description* |
|---|---|---|---|
| 1 | 103-1167 | 1 | Joint-Ball End, LH |
| 2 | 3219-20 | 1 | Nut-Hex, LH |
| 3 | 105-7239 | 1 | Rod-Threaded |
| 4 | 3219-3 | 1 | Nut-Hex |
| 5 | 105-7199 | 1 | Rod End-Isolated |

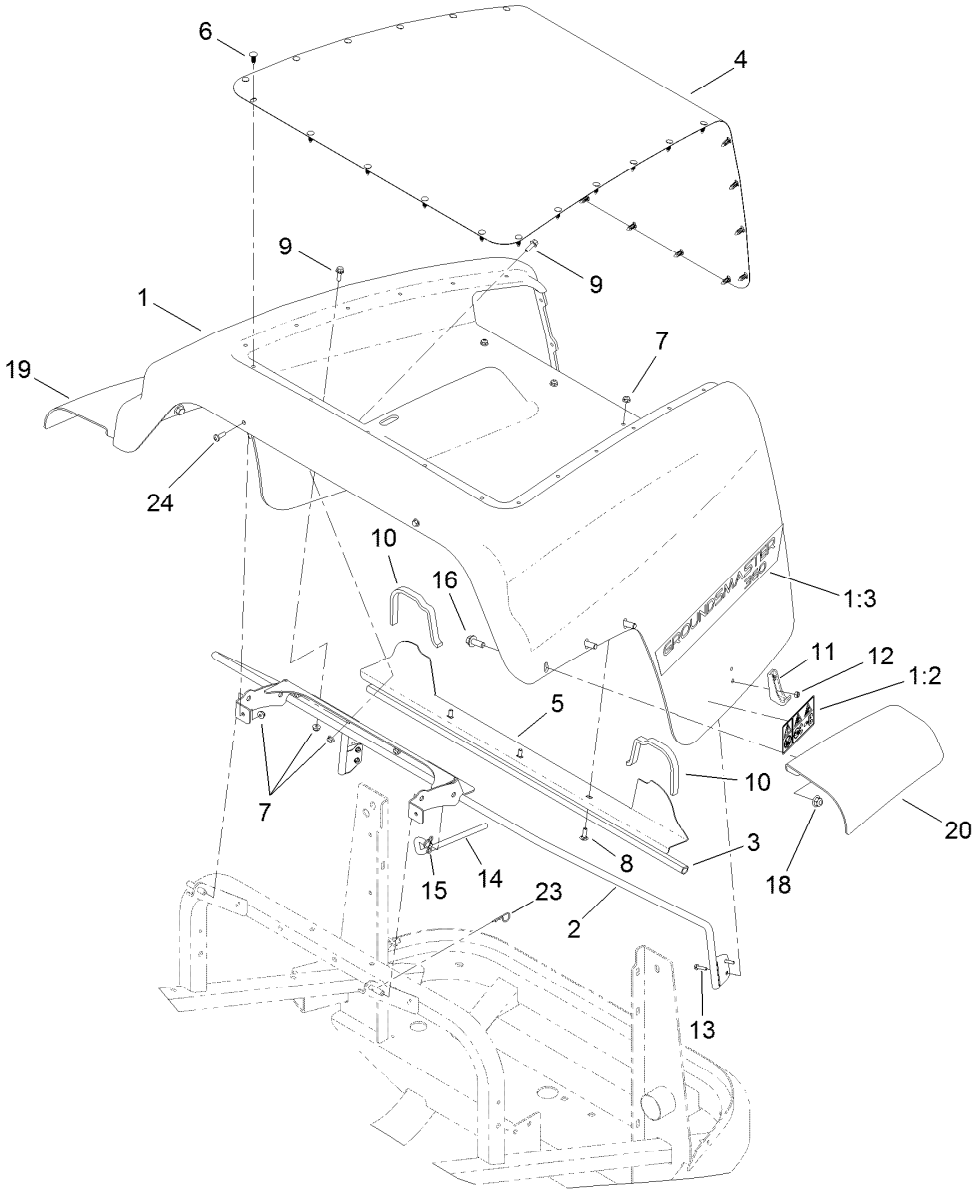


# Hood Assembly

| Ref. | Part Number | Qty. | Description |
|---|---|---|---|
| 1 | 120-0266 | 1 | Hood ASM |
| 1:2 | 117-3270 | 2 | Decal-Danger |
| 1:3 | 117-3279 | 2 | Decal-Hood |
| 2 | 115-0364-03 | 1 | Hood Mount ASM |
| 3 | 115-0423 | 1 | Seal-Bulb |
| 4 | 115-0370-03 | 1 | Screen |
| 5 | 115-0422-03 | 1 | Seal-Hood |
| 6 | 117-2382 | 29 | Plug-Plastic |
| 7 | 104-7201 | 11 | Nut-HF |
| 8 | 3229-1 | 3 | Screw-CARR |
| 9 | 3234-4 | 6 | Screw-HHF |
| 10 | 110-8288 | 2 | Seal-Foam |

| Ref. | Part Number | Qty. | Description |
|---|---|---|---|
| 11 | 103-2897 | 2 | Latch-Catch |
| 12 | 3296-2 | 4 | Nut-Lock, NI |
| 13 | 32105-13 | 4 | Screw-HWH |
| 14 | 117-3171 | 1 | Rod-Prop |
| 15 | 119-1415 | 1 | Pin-Cotter, Locking |
| 16 | 3234-42 | 6 | Screw-HHF |
| 18 | 104-8301 | 6 | Nut-Flange, NI |
| 19 | 117-3369 | 1 | Fender-Rear, RH |
| 20 | 117-3368 | 1 | Fender-Rear, LH |
| 23 | 9335054 | 1 | Pin-Hair |
| 24 | 3250-32 | 2 | Screw-PPH |

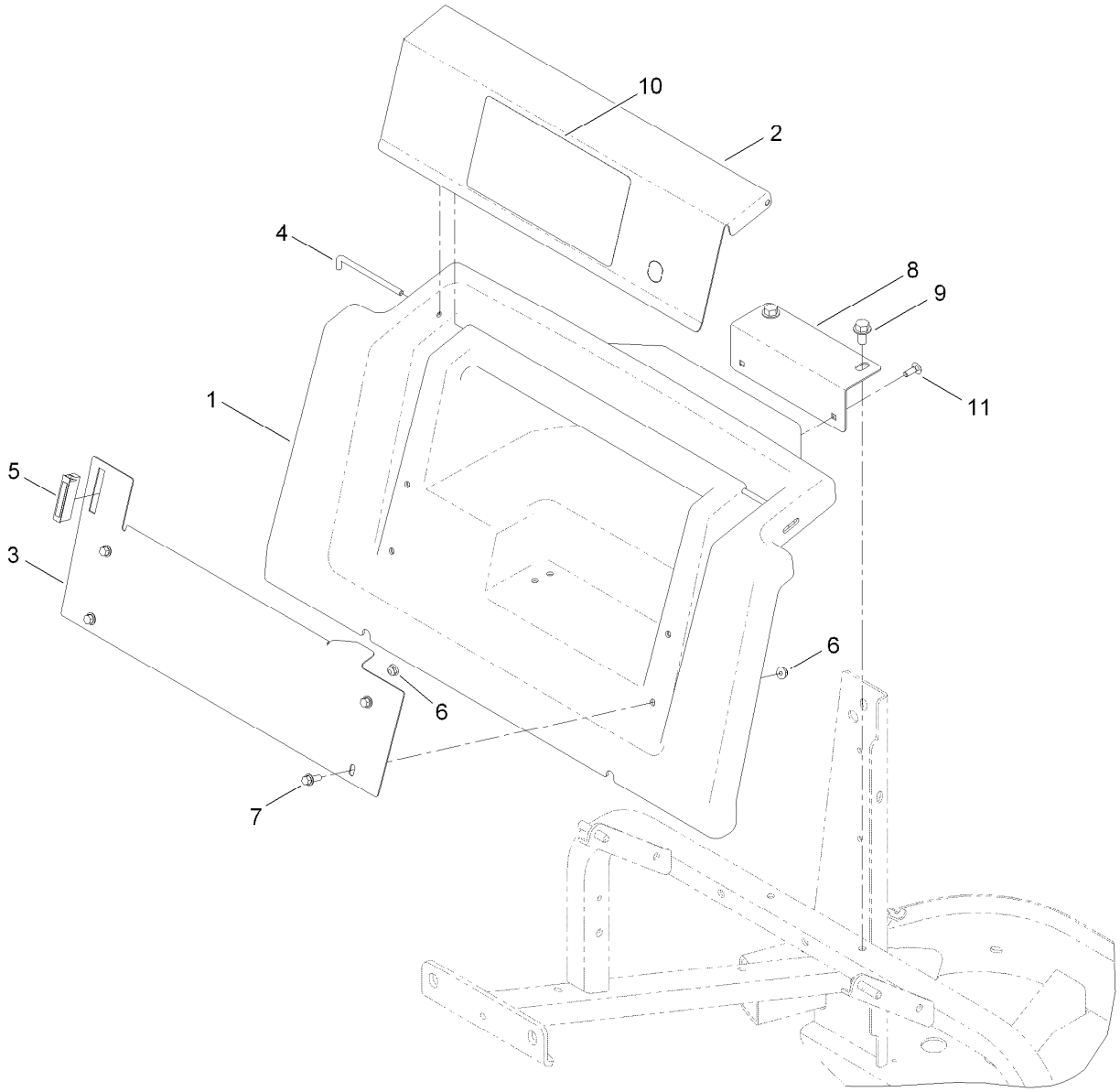


# Storage Compartment Assembly

| *Ref.* | *Part Number* | *Qty.* | *Description* |
|---|---|---|---|
| 1 | 120-0222 | 1 | Housing ASM |
| 2 | 117-3185-03 | 1 | Cover-Storage |
| 3 | 117-3186-03 | 1 | Panel-Lower |
| 4 | 117-3189 | 2 | Rod-Hinge |
| 5 | 58-4250 | 1 | Catch-Magnetic |
| 6 | 104-7201 | 6 | Nut-HF |
| 7 | 3234-4 | 4 | Screw-HHF |
| 8 | 117-3187-03 | 1 | Support-Housing |
| 9 | 110-9380 | 2 | Screw-HWH |
| 10 | 120-0259 | 1 | Decal-Service Instructions |
| 11 | 3229-1 | 2 | Screw-CARR |

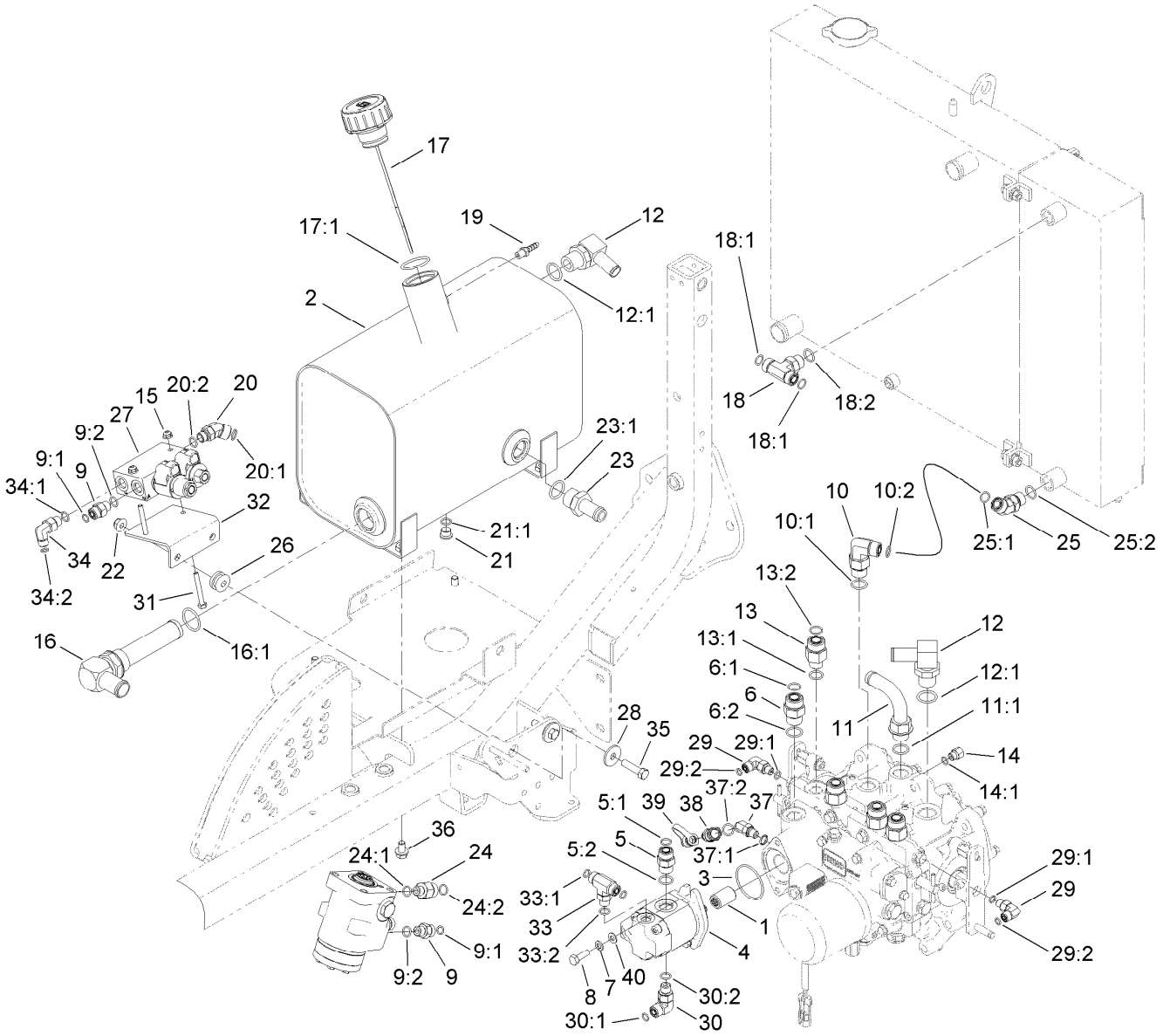


# Deck Lift Valve and Hydraulic Fitting Assembly

| Ref. | Part Number | Qty. | Description |
|---|---|---|---|
| 1 | 108-9920 | 1 | Coupler-Spline, 9T |
| 2 | 117-3372 | 1 | Tank-Hydraulic, Metal |
| 3 | 108-9919 | 1 | O-Ring |
| 4 | 115-0375 | 1 | Gear Pump ASM |
| 5 | 340-4 | 1 | Fitting-HYD, Straight |
| 5:1 | 237-30 | 1 | O-Ring |
| 5:2 | 237-79 | 1 | O-Ring |
| 6 | 340-7 | 1 | Adapter |
| 6:1 | 237-65 | 1 | O-Ring |
| 6:2 | 237-80 | 1 | O-Ring |
| 7 | 3253-4 | 2 | Washer-Lock |
| 8 | 33114-025 | 2 | Screw-HH |
| 9 | 340-2 | 5 | Fitting-HYD, Straight |
| 9:1 | 237-22 | 1 | O-Ring |
| 9:2 | 237-42 | 1 | O-Ring |
| 10 | 340-105 | 1 | Fitting-HYD, 90 DEG |
| 10:1 | 237-80 | 1 | O-Ring |
| 10:2 | 237-30 | 1 | O-Ring |
| 11 | 110-5522 | 1 | Fitting-Elbow, 90 |
| 11:1 | 237-80 | 1 | O-Ring |

| Ref. | Part Number | Qty. | Description |
|---|---|---|---|
| 12 | 353-987 | 2 | Fitting-HYD, 90 DEG (Barbed) |
| 12:1 | 237-81 | 1 | O-Ring |
| 13 | 340-155 | 4 | Fitting-HYD, Straight |
| 13:1 | 237-79 | 1 | O-Ring |
| 13:2 | 237-151 | 1 | O-Ring |
| 14 | 110-5536 | 1 | Fitting-HYD, Adapter |
| 14:1 | 237-78 | 1 | O-Ring |
| 15 | 104-7201 | 2 | Nut-HF |
| 16 | 105-0204 | 1 | Strainer Fitting ASM |
| 16:1 | 237-146 | 1 | O-Ring |
| 17 | 117-3389 | 1 | Cap-Tank, Hydraulic |
| 17:1 | 237-101 | 1 | O-Ring |
| 18 | 340-157 | 1 | Fitting-HYD, Tee |
| 18:1 | 237-79 | 1 | O-Ring |
| 18:2 | 237-30 | 2 | O-Ring |
| 19 | 94-7220 | 1 | Hose-Barb |
| 20 | 340-96 | 1 | Adapter |
| 20:1 | 237-30 | 1 | O-Ring |
| 20:2 | 237-42 | 1 | O-Ring |
| 21 | 353-989 | 1 | Plug-Hex, Hollow |

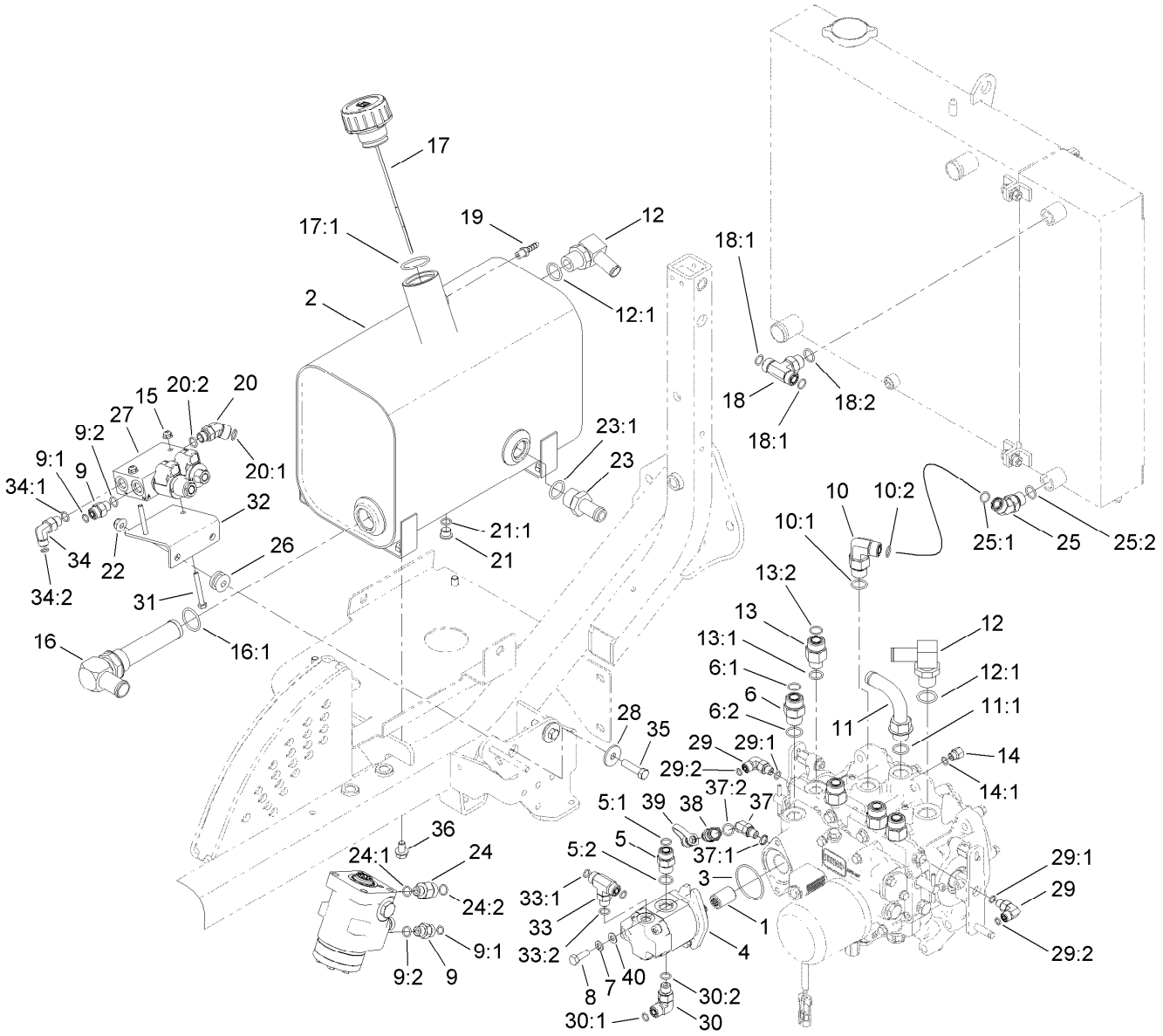


# Deck Lift Valve and Hydraulic Fitting Assembly (continued)

| Ref. | Part Number | Qty. | Description |
|---|---|---|---|
| 21:1 | 237-42 | 1 | O-Ring |
| 22 | 104-8301 | 2 | Nut-Flange, NI |
| 23 | 354-73 | 1 | Fitting-Straight |
| 23:1 | 237-81 | 1 | O-Ring |
| 24 | 340-5 | 1 | Fitting-Straight |
| 24:1 | 237-42 | 1 | O-Ring |
| 24:2 | 237-30 | 1 | O-Ring |
| 25 | 340-101 | 1 | Fitting-HYD, 45 DEG |
| 25:1 | 237-30 | 1 | O-Ring |
| 25:2 | 237-79 | 1 | O-Ring |
| 26 | 63-9750 | 2 | Mount |
| 27 | 115-0356 | 1 | Deck Lift Valve ASM |
| 28 | 63-8410 | 2 | Washer |
| 29 | 340-132 | 2 | Fitting-HYD, 90 DEG |
| 29:1 | 237-78 | 1 | O-Ring |
| 29:2 | 237-21 | 1 | O-Ring |
| 30 | 340-77 | 1 | Fitting-HYD, 90 DEG |
| 30:1 | 237-22 | 1 | O-Ring |

| Ref. | Part Number | Qty. | Description |
|---|---|---|---|
| 30:2 | 237-42 | 1 | O-Ring |
| 31 | 321-11 | 2 | Screw-HH |
| 32 | 115-0355-03 | 1 | Plate-Mount, Valve |
| 33 | 340-94 | 1 | Adapter |
| 33:1 | 237-22 | 2 | O-Ring |
| 33:2 | 237-42 | 1 | O-Ring |
| 34 | 340-82 | 1 | Adapter |
| 34:1 | 237-42 | 1 | O-Ring |
| 34:2 | 237-21 | 1 | O-Ring |
| 35 | 323-8 | 2 | Screw-HH |
| 36 | 32144-15 | 4 | Screw-HHFTF |
| 37 | 340-103 | 1 | Fitting-HYD, 45 DEG |
| 37:1 | 237-78 | 1 | O-Ring |
| 37:2 | 237-21 | 1 | O-Ring |
| 38 | 115-8886 | 1 | Nipple-Test |
| 39 | 354-79 | 1 | Cap-Dust |
| 40 | 3256-23 | 2 | Washer-Flat |

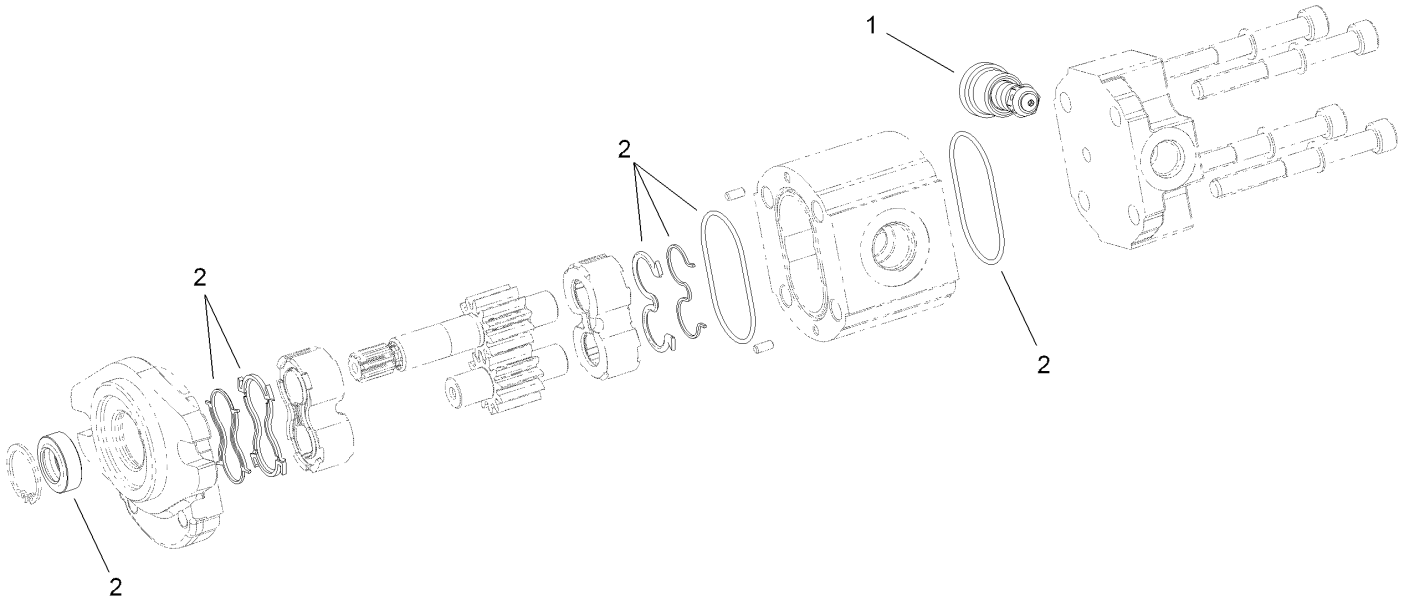


# Hydraulic Gear Pump Assembly No. 115-0375

| *Ref.* | *Part Number* | *Qty.* | *Description* |
|---|---|---|---|
| 1 | 115-0376 | 1 | Valve-Relief, 125 Bar |
| 2 | 112-0199 | 1 | Seal Kit |

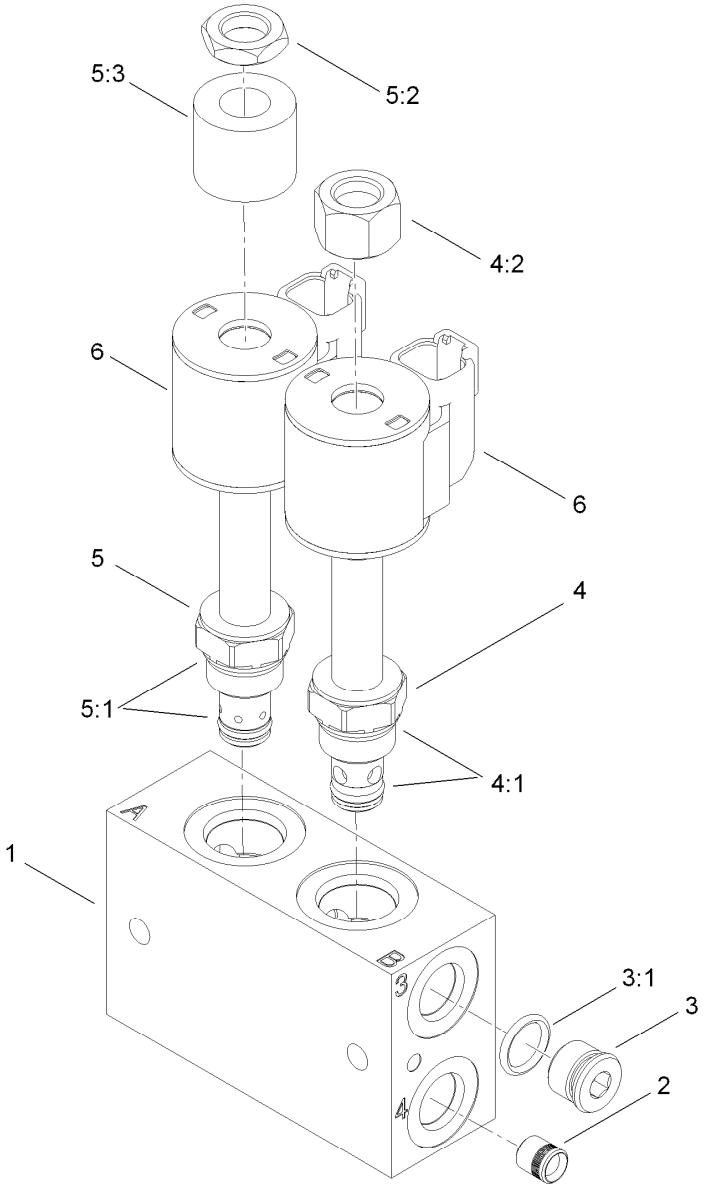


# Deck Lift Valve Assembly No. 115-0356

| Ref. | Part Number | Qty. | Description |
|---|---|---|---|
| 1 | | 1 | Block-Manifold ● |
| 2 | | 1 | Plug ● |
| 3 | 353-512 | 1 | Plug |
| 3:1 | 237-78 | 1 | O-Ring |
| 4 | 107-7517 | 1 | Valve-Solenoid |
| 4:1 | 105-9156 | 1 | Seal Kit |
| 4:2 | 107-7812 | 1 | Nut-Solenoid |
| 5 | 110-8898 | 1 | Valve-Solenoid |
| 5:1 | 107-7527 | 1 | Seal Kit |
| 5:2 | 110-2634 | 1 | Nut-Coil |
| 5:3 | 110-8909 | 1 | Spacer-Coil |
| 6 | 119-8036 | 1 | E-Coil,12 Vdc,-08 |

● Not serviced separately

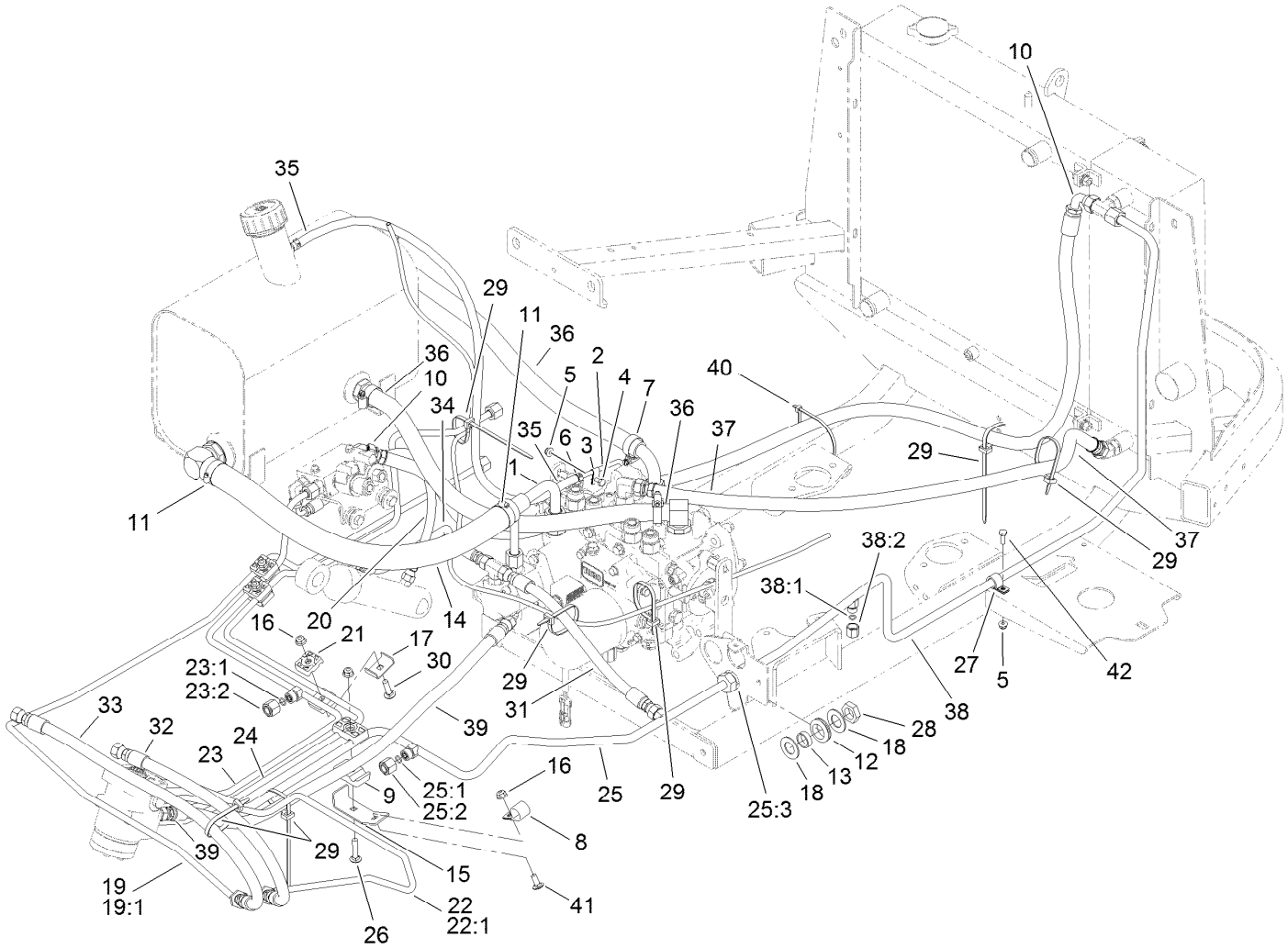


# Hydraulic Tube and Hose Assembly

| Ref. | Part Number | Qty. | Description |
|---|---|---|---|
| 1 | 115-0184 | 1 | Suction Tube ASM |
| 2 | 110-5537 | 1 | Tube ASM |
| 3 | 2412-72 | 1 | Clip-Closed, Insulated |
| 4 | 321-4 | 1 | Screw-HH |
| 5 | 104-7201 | 2 | Nut-HF |
| 6 | 2412-98 | 2 | Clamp-Hose |
| 7 | 2412-129 | 4 | Clamp-Hose |
| 8 | 2412-4 | 1 | Clamp |
| 9 | 56-7972 | 2 | Clamp-Tube |
| 10 | 117-3129 | 1 | Hose ASM |
| 11 | 2412-34 | 2 | Clamp-Hose |
| 12 | 240-5 | 1 | Grommet |
| 13 | 69-8960 | 1 | Spacer |
| 14 | 117-3200 | 1 | Hose-Suction |
| 15 | 120-0245 | 1 | Bracket-Support |
| 16 | 104-8300 | 5 | Nut-Flange, NI |
| 17 | 119-1418 | 3 | Plate-Clamp |
| 18 | 69-8930 | 2 | Washer |
| 19 | 117-3117 | 1 | Tube-Steering Manifold, Front Cylinder |
| 19:1 | 237-22 | 1 | O-Ring |

| Ref. | Part Number | Qty. | Description |
|---|---|---|---|
| 20 | 112-9185 | 1 | Hose-HYD |
| 21 | 56-7973 | 6 | Clamp-Tube |
| 22 | 117-3110 | 1 | Tube-Steering, Front |
| 22:1 | 237-22 | 1 | O-Ring |
| 23 | 117-3111 | 1 | Tube-Steering, Lift |
| 23:1 | 237-22 | 1 | O-Ring |
| 23:2 | 340-117 | 1 | Cap |
| 24 | 117-3112 | 1 | Tube-Steering, Manifold |
| 25 | 117-3113 | 1 | Tube-Steering, Drain |
| 25:1 | 237-22 | 2 | O-Ring |
| 25:2 | 340-117 | 1 | Cap |
| 25:3 | 237-30 | 1 | O-Ring |
| 26 | 3230-4 | 1 | Screw-CARR |
| 27 | 2412-87 | 1 | Clamp-Cable |
| 28 | 340-127 | 1 | Nut-Bulkhead |
| 29 | 3290-378 | 2 | Tie-Cable |
| 30 | 3230-3 | 3 | Screw-CARR |
| 31 | 117-3122 | 1 | Hose ASM |
| 32 | 119-1433 | 1 | Hose ASM |
| 33 | 100-5629 | 1 | Hose ASM |
| 34 | 117-3123 | 1 | Hose ASM |

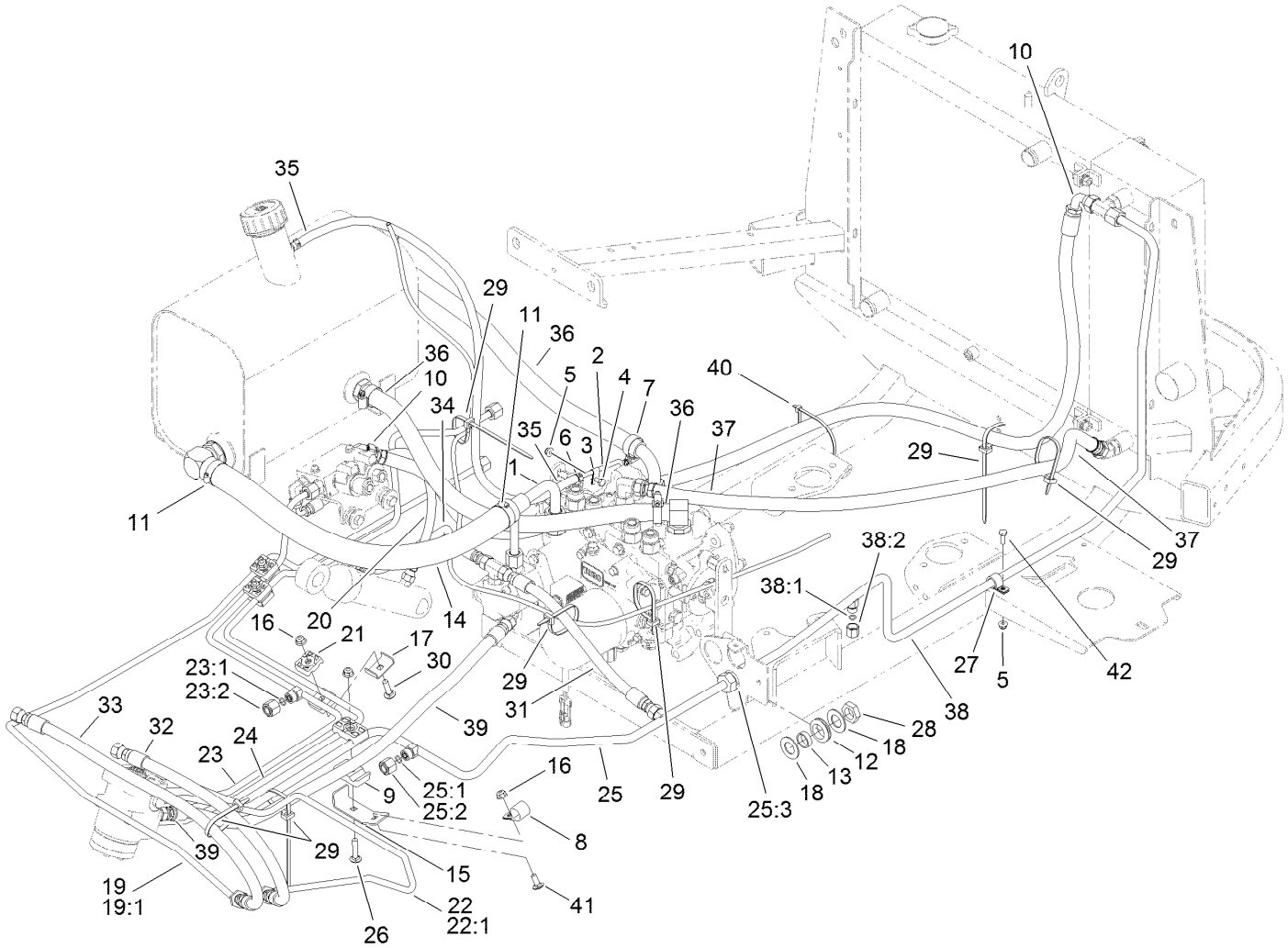


# Hydraulic Tube and Hose Assembly (continued)

| Ref. | Part Number | Qty. | Description |
|---|---|---|---|
| 35 | 109-0275 | 1 | Hose-Fuel |
| 36 | 117-3121 | 2 | Hose ASM |
| 37 | 117-3128 | 1 | Hose ASM |
| 38 | 117-3114 | 1 | Tube-Drain, Cooler |
| 38:1 | 237-21 | 1 | O-Ring |

| Ref. | Part Number | Qty. | Description |
|---|---|---|---|
| 38:2 | 117-3297 | 1 | Fitting-Cap |
| 39 | 119-8114 | 1 | HYD Hose ASM |
| 40 | 3334-945 | 5 | Tie-Cable |
| 41 | 3230-23 | 1 | Screw-CARR |
| 42 | 321-5 | 1 | Screw-HH |

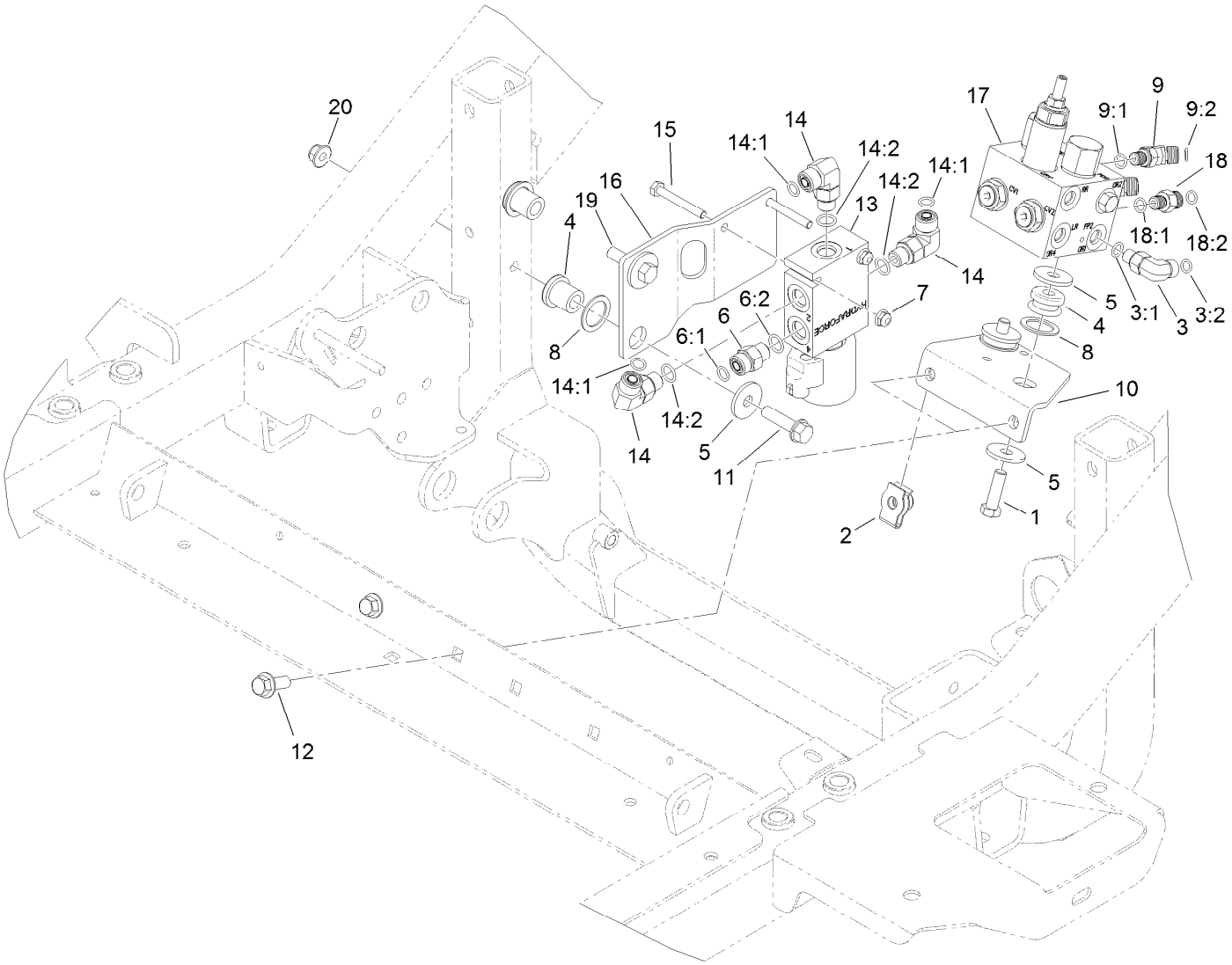


# Hydraulic Valve Assembly

| Ref. | Part Number | Qty. | Description |
|---|---|---|---|
| 1 | 323-7 | 2 | Screw-HH |
| 2 | 105-4886 | 2 | Nut-Tinnerman |
| 3 | 340-132 | 1 | Fitting-HYD, 90 DEG |
| 3:1 | 237-78 | 1 | O-Ring |
| 3:2 | 237-21 | 1 | O-Ring |
| 4 | 63-9750 | 4 | Mount |
| 5 | 63-8410 | 6 | Washer |
| 6 | 340-2 | 1 | Fitting-HYD, Straight |
| 6:1 | 237-22 | 1 | O-Ring |
| 6:2 | 237-42 | 1 | O-Ring |
| 7 | 104-7201 | 2 | Nut-HF |
| 8 | 1-303352 | 4 | Washer-Spindle |
| 9 | 340-103 | 2 | Fitting-HYD, 45 DEG |
| 9:1 | 237-78 | 1 | O-Ring |
| 9:2 | 237-21 | 1 | O-Ring |
| 10 | 119-1409-03 | 1 | Mount-Plate |

| Ref. | Part Number | Qty. | Description |
|---|---|---|---|
| 11 | 323-20 | 1 | Screw-HH |
| 12 | 3234-42 | 2 | Screw-HHF |
| 13 | 115-0280 | 1 | Steer Selector Valve ASM |
| 14 | 340-77 | 3 | Fitting-HYD, 90 DEG |
| 14:1 | 237-22 | 1 | O-Ring |
| 14:2 | 237-42 | 1 | O-Ring |
| 15 | 321-11 | 2 | Screw-HH |
| 16 | 115-0384-03 | 1 | Plate-Valve Mount |
| 17 | 117-2247 | 1 | Cross-Trax Traction Valve ASM |
| 18 | 340-92 | 1 | Fitting-HYD, Straight |
| 18:1 | 237-78 | 1 | O-Ring |
| 18:2 | 237-21 | 1 | O-Ring |
| 19 | 323-8 | 1 | Screw-HH |
| 20 | 104-8301 | 2 | Nut-Flange, NI |

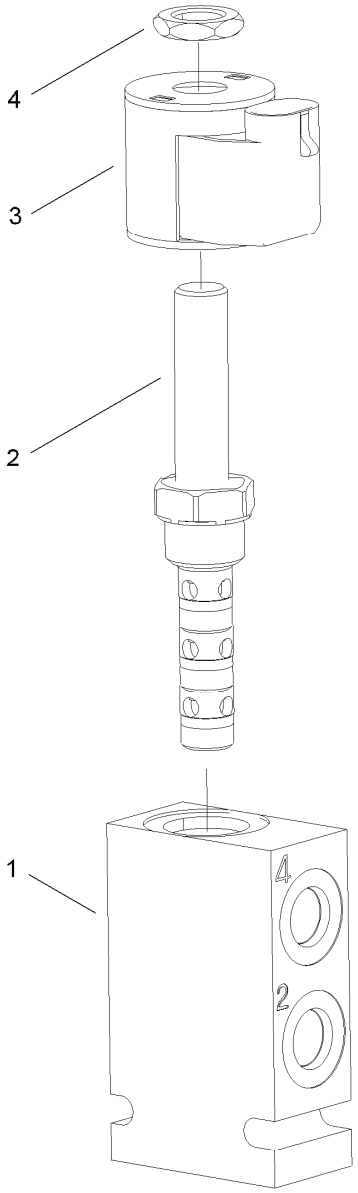


# Steering Selector Valve Assembly No. 115-0280

| *Ref.* | *Part Number* | *Qty.* | *Description* |
|---|---|---|---|
| 1 | | 1 | Block-Manifold ● |
| 2 | 119-8042 | 1 | Valve-Solenoid |
| 3 | 110-6344 | 1 | Coil-12V, Dc |
| 4 | 110-2634 | 1 | Nut-Coil |

● Not serviced separately

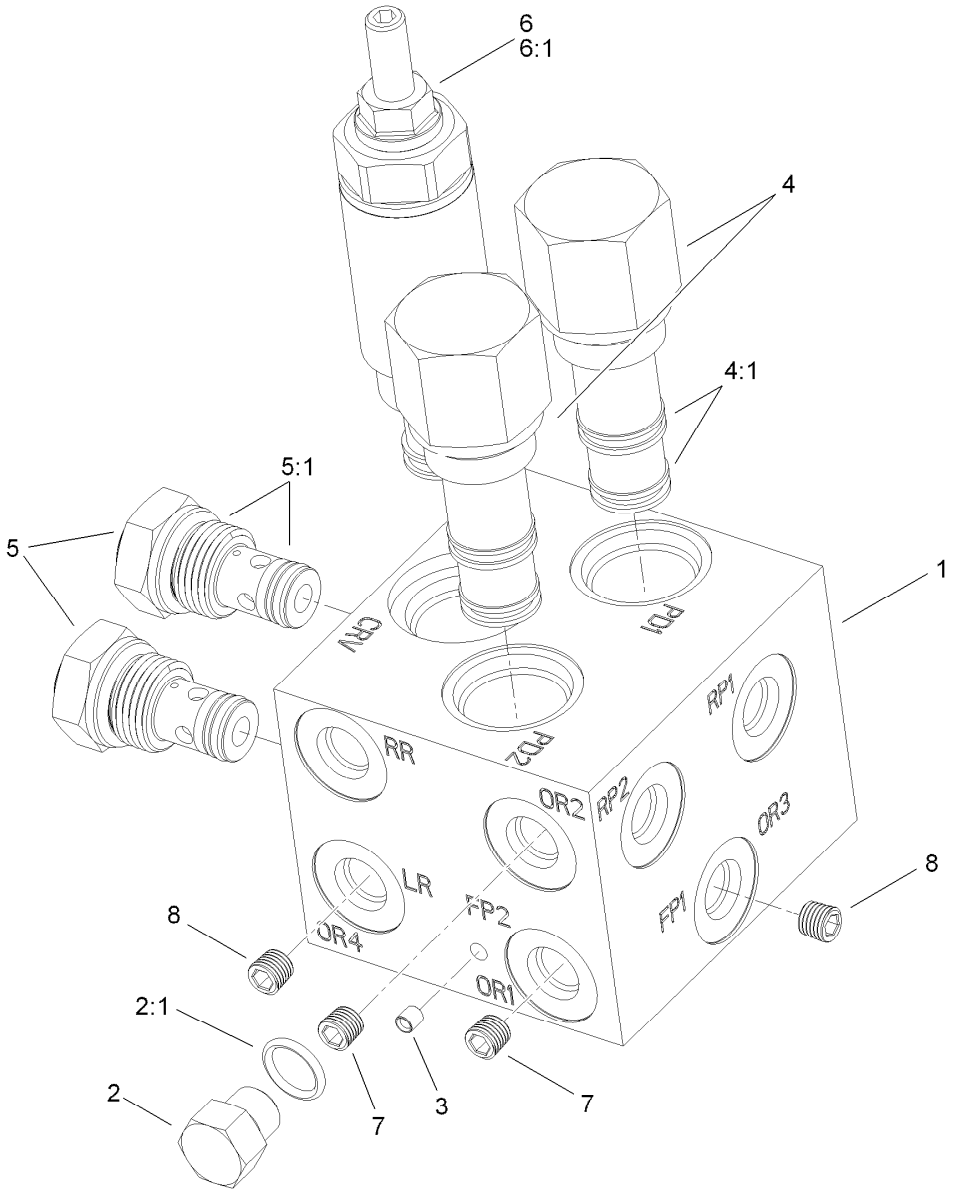


# Cross-Trax Traction Valve Assembly No. 117-2247

| *Ref.* | *Part Number* | *Qty.* | *Description* |
|---|---|---|---|
| 1 | | 1 | Block-Manifold ● |
| 2 | 117-0115 | 1 | Plug-HYD |
| 2:1 | 237-78 | 1 | O-Ring |
| 3 | | 1 | Plug-4Mm ● |
| 4 | 119-8028 | 2 | Valve-Pilot, Directional |
| 4:1 | 119-8029 | 1 | Pilot Valve Seal Kit |
| 5 | 119-8030 | 2 | Valve-Check |
| 5:1 | 119-8031 | 1 | Seal Kit-Check Valve |
| 6 | 119-8032 | 1 | Valve-Relief |
| 6:1 | 119-8033 | 1 | Relief Valve Seal Kit |
| 7 | 119-8034 | 2 | Orifice-.090 |
| 8 | 119-8035 | 2 | Orifice-.040 |

● Not serviced separately

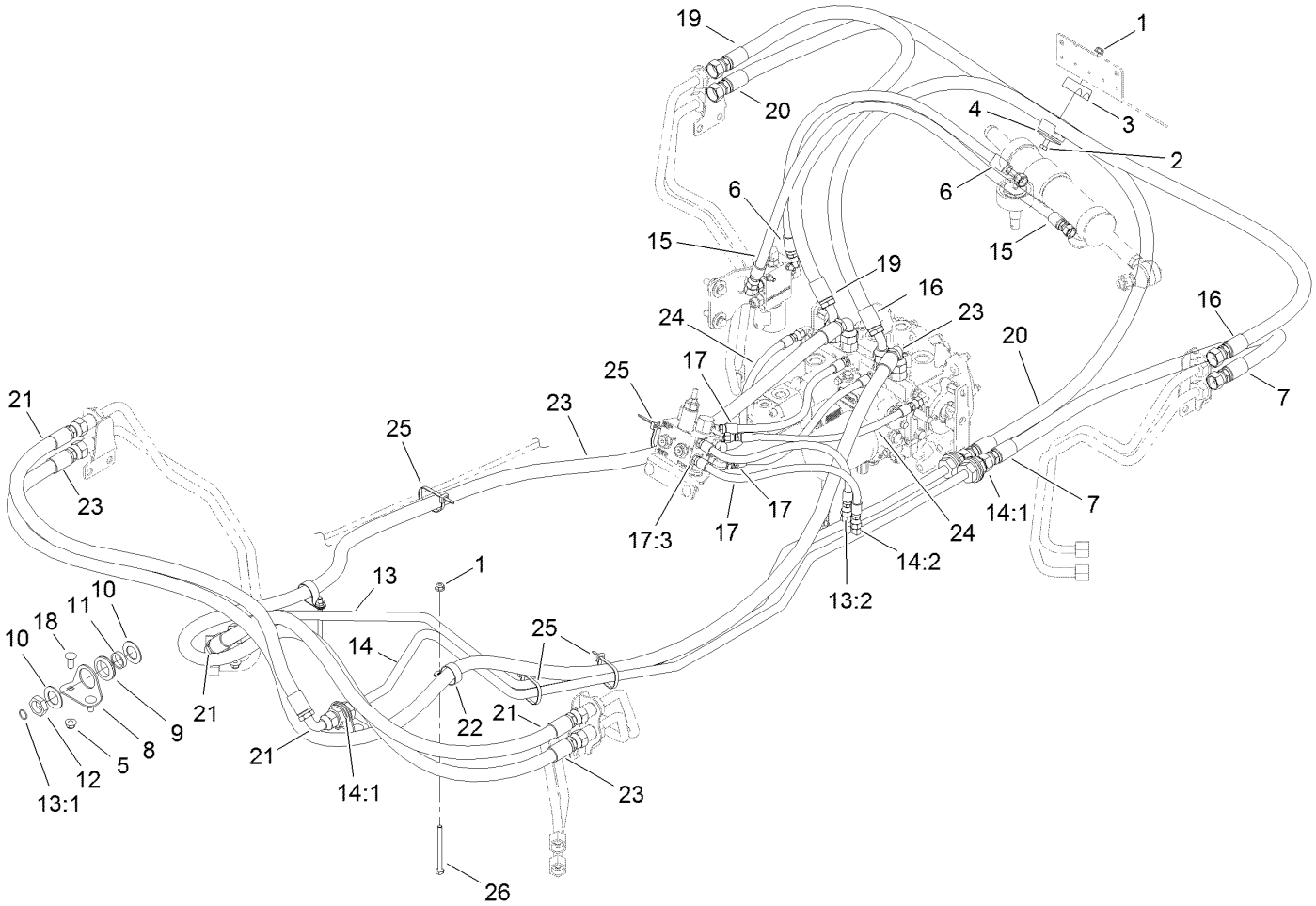


# 4 Wheel Drive Hydraulic Hose Assembly

| Ref. | Part Number | Qty. | Description |
|---|---|---|---|
| 1 | 104-8300 | 3 | Nut-Flange, NI |
| 2 | 322-11 | 1 | Screw-HH |
| 3 | 56-7974 | 2 | Clamp-Tube |
| 4 | 69-9761 | 1 | Coverplate |
| 5 | 104-8301 | 4 | Nut-Flange, NI |
| 6 | 119-1431 | 1 | Hose ASM |
| 7 | 119-1435 | 1 | Hose ASM |
| 8 | 115-0479 | 2 | Bracket-Bulkhead |
| 9 | 240-3 | 4 | Grommet-Rubber |
| 10 | 69-9010 | 8 | Washer |
| 11 | 69-9000 | 4 | Spacer |
| 12 | 340-74 | 4 | Nut-Lock, Bulkhead |
| 13 | 117-3115 | 1 | Tube ASM-Front Trax, RH |
| 13:1 | 237-65 | 2 | O-Ring |
| 13:2 | 237-20 | 1 | O-Ring |
| 14 | 117-3116 | 1 | Tube ASM-Front Trax, LH |

| Ref. | Part Number | Qty. | Description |
|---|---|---|---|
| 14:1 | 237-65 | 2 | O-Ring |
| 14:2 | 237-21 | 1 | O-Ring |
| 15 | 119-1432 | 1 | Hose ASM |
| 16 | 117-3249 | 1 | Hose ASM |
| 17 | 115-0377 | 4 | Hose ASM |
| 17:3 | 237-78 | 1 | O-Ring |
| 18 | 3231-22 | 4 | Screw-CARR |
| 19 | 117-3130 | 1 | Hose ASM |
| 20 | 117-3248 | 1 | Hose ASM |
| 21 | 117-3124 | 2 | Hose ASM |
| 22 | 2412-74 | 2 | R-Clamp |
| 23 | 117-3126 | 2 | Hose ASM |
| 24 | 117-3127 | 2 | Hose ASM |
| 25 | 3334-945 | 4 | Tie-Cable |
| 26 | 322-19 | 2 | Screw-HH |

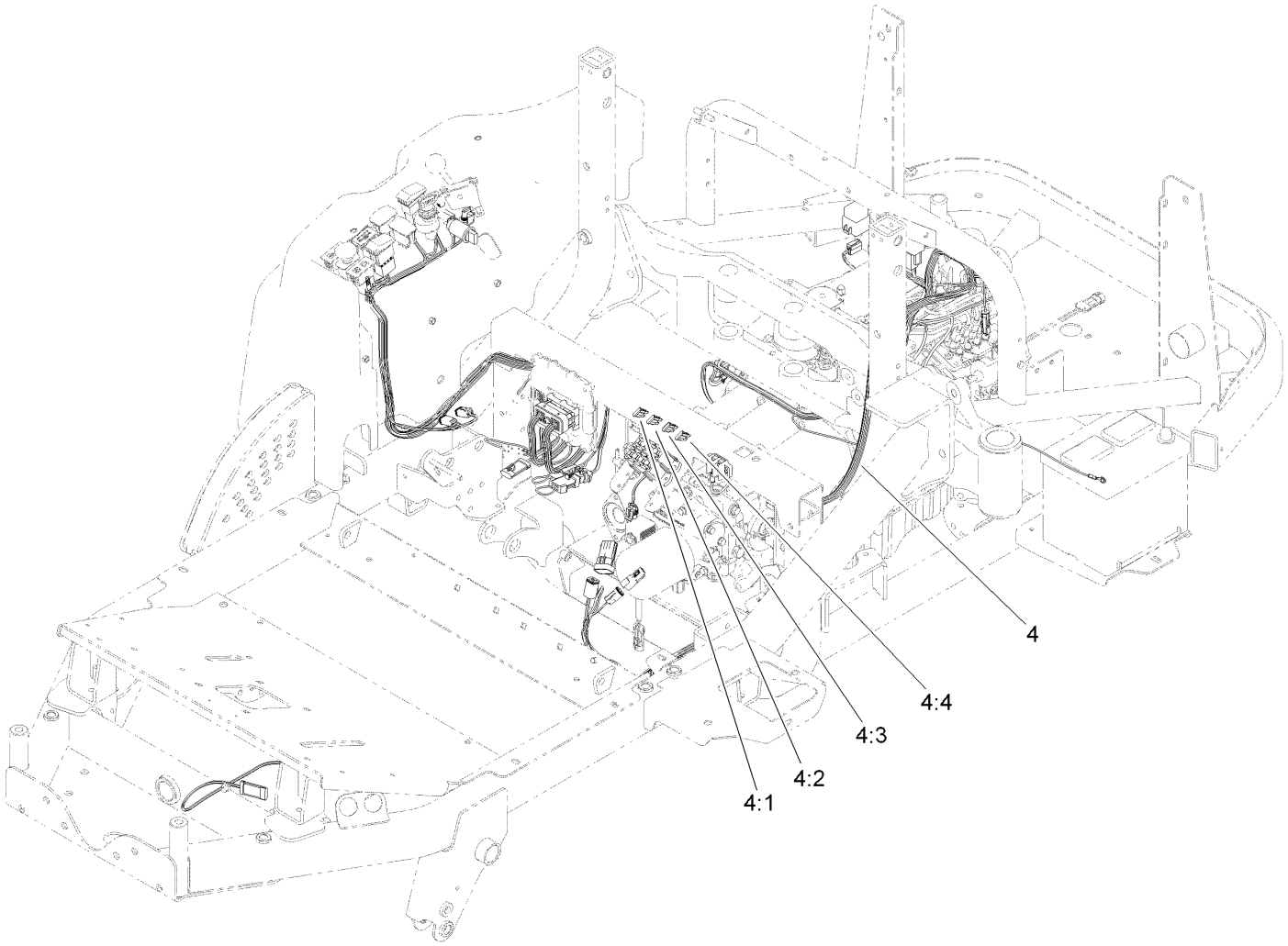


# Electrical Assembly

| *Ref.* | *Part Number* | *Qty.* | *Description* |
|---|---|---|---|
| 4 | 121-6553 | 1 | Harness-Wire, 4Wd |
| 4:1 | 94-6710 | 1 | Fuse-2 Amp |
| 4:2 | 114241 | 3 | Fuse-Blade, 7.5 Amp |
| 4:3 | 218-578 | 4 | Fuse-Blade, 10 Amp |
| 4:4 | 109355 | 1 | Fuse-Blade, 15 Amp |

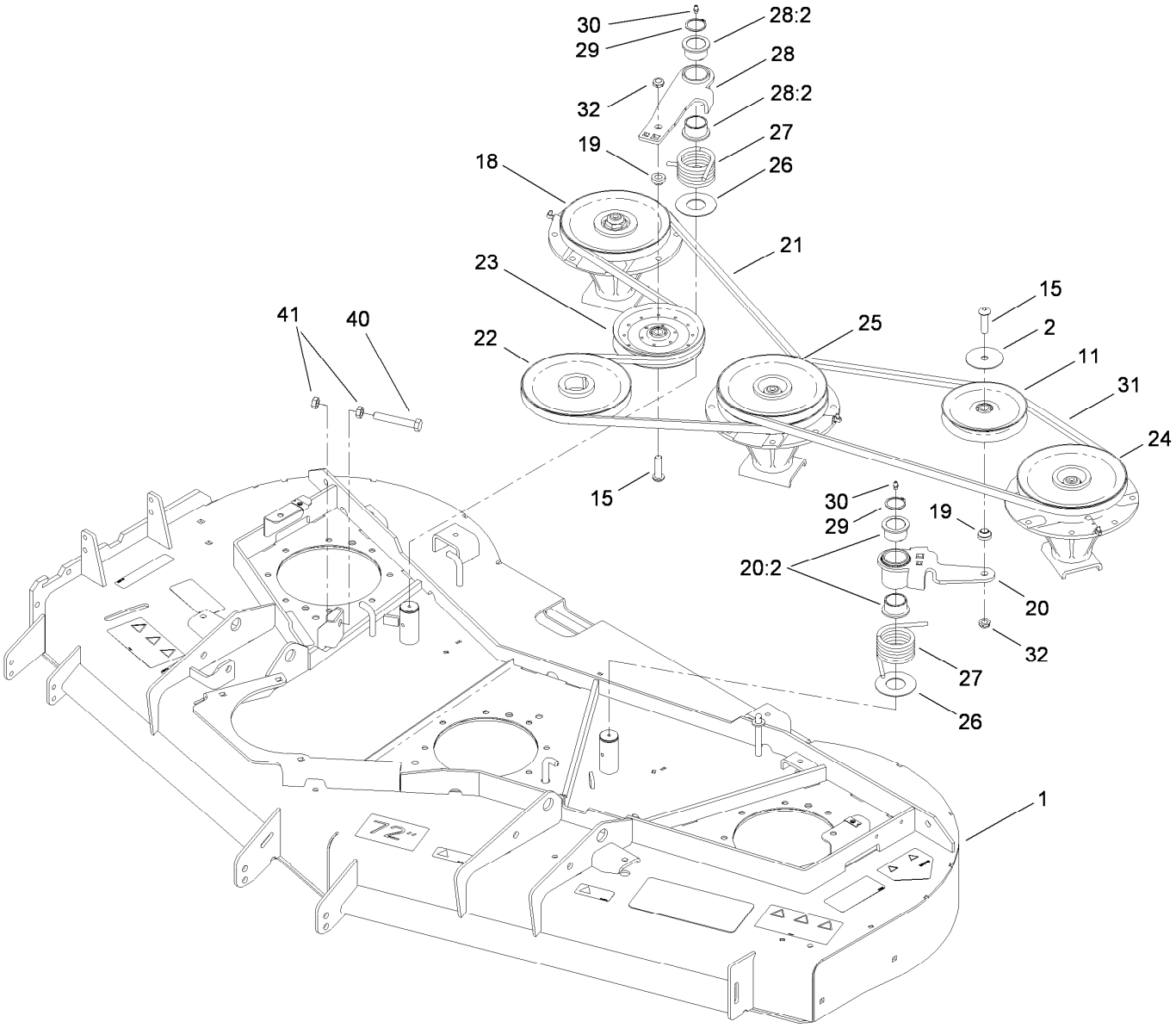


# Deck Belt and Pulley Assembly

| Ref. | Part Number | Qty. | Description |
|---|---|---|---|
| 1 | 108-9901 | 1 | Deck ASM |
| 2 | 100-3102 | 1 | Washer-Flat |
| 11 | 01-268-0160 | 1 | Pulley-Idler |
| 15 | 108-1993 | 2 | Screw-HSBH |
| 18 | 119-4778 | 1 | Spindle ASM |
| 19 | 108-1924 | 2 | Spacer-Idler |
| 20 | 117-9176 | 1 | Idler Arm ASM |
| 20:2 | 93-4510 | 2 | Bushing-Caster |
| 21 | 110-9590 | 1 | Belt-V |
| 22 | 107-4767 | 1 | Pulley ASM |
| 23 | 110-9596 | 1 | Pulley-Idler |
| 24 | 117-9233 | 1 | High Spindle ASM |

| Ref. | Part Number | Qty. | Description |
|---|---|---|---|
| 25 | 117-9234 | 1 | Double Spindle ASM |
| 26 | 108-1926 | 2 | Washer |
| 27 | 108-1921 | 2 | Spring-Torsion |
| 28 | 108-1930 | 1 | Idler Arm ASM |
| 28:2 | 93-4510 | 2 | Bushing-Caster |
| 29 | 32120-84 | 2 | Ring-Snap, External |
| 30 | 302-5 | 2 | Fitting-Grease |
| 31 | 110-9591 | 1 | Belt-V |
| 32 | 3296-45 | 2 | Nut-Lock, NI |
| 40 | 325-14 | 1 | Screw-HH |
| 41 | 3218-5 | 2 | Nut-Jam |

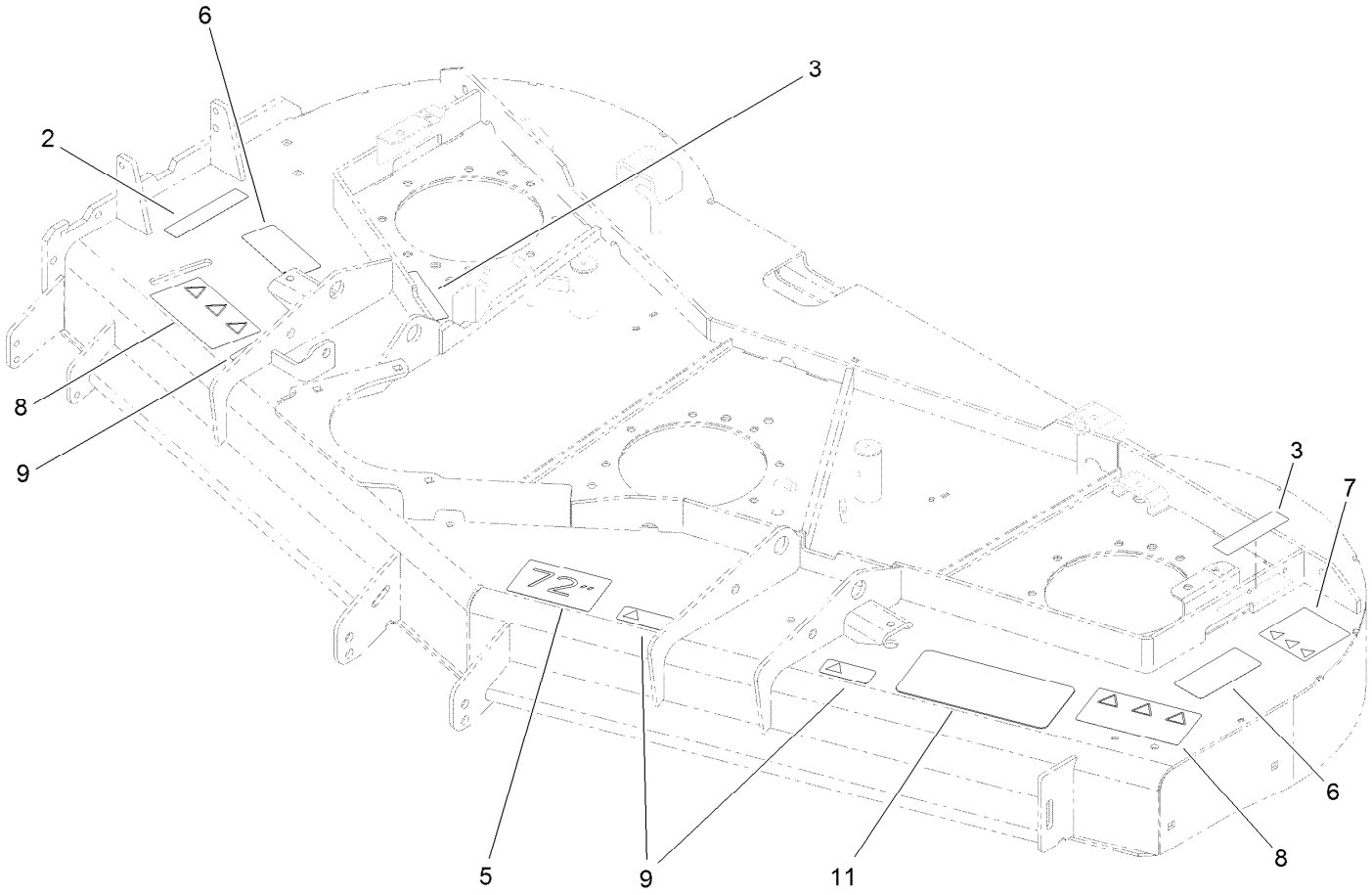


# Deck Decal Assembly No. 108-9901

| *Ref.* | *Part Number* | *Qty.* | *Description* |
|---|---|---|---|
| 2 | 107-2916 | 1 | Decal-Warning |
| 3 | 117-4979 | 2 | Decal-Warning, Shields (Ce) |
| 5 | 57-0280 | 1 | Decal |
| 6 | 93-7818 | 2 | Decal-Torque, Blade Bolt |
| 7 | 120-6604 | 1 | Decal-Danger |
| 8 | 107-2908 | 2 | Decal-Danger, Combination |
| 9 | 93-6696 | 3 | Decal-Warning |
| 11 | 110-0988 | 1 | Tread-Floor, Side |

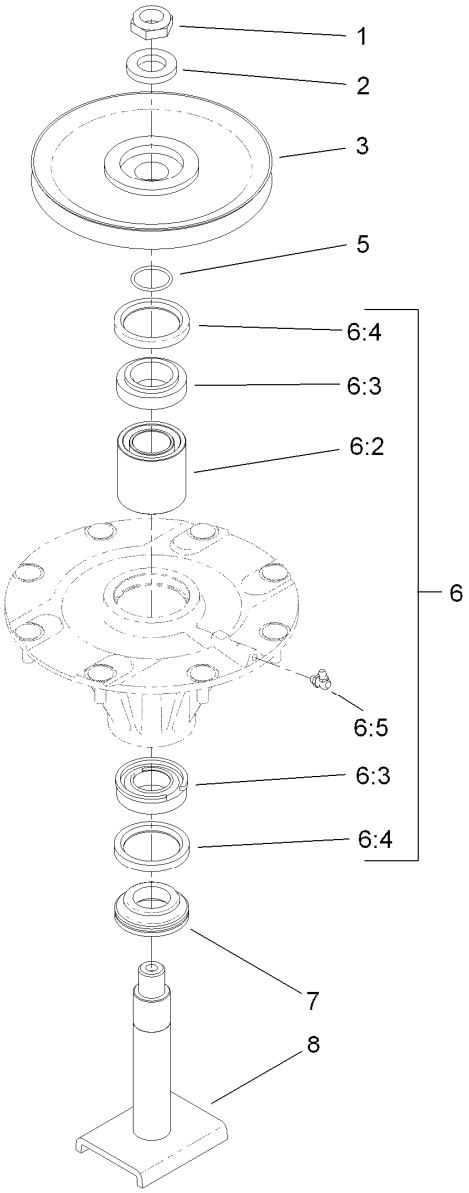


# Spindle Assembly No. 119-4778

| Ref. | Part Number | Qty. | Description |
|---|---|---|---|
| 1 | 3296-60 | 1 | Nut-Lock, NI |
| 2 | 104-8322 | 1 | Washer-Hardened |
| 3 | 104-3546 | 1 | Pulley-Driven, Low |
| 5 | 106-7159 | 1 | O-Ring |
| 6 | 119-4777 | 1 | Spindle ASM |
| 6:2 | 108-1954 | 1 | Spacer Set-Bearing |
| 6:3 | 110-8297 | 1 | Bearing ASM |
| 6:4 | 253-154 | 2 | Seal-Oil |
| 6:5 | 302-60 | 1 | Fitting-Grease |
| 7 | 69-6950 | 1 | Spacer-Shaft, Spindle |
| 8 | 108-1956 | 1 | Shaft ASM |

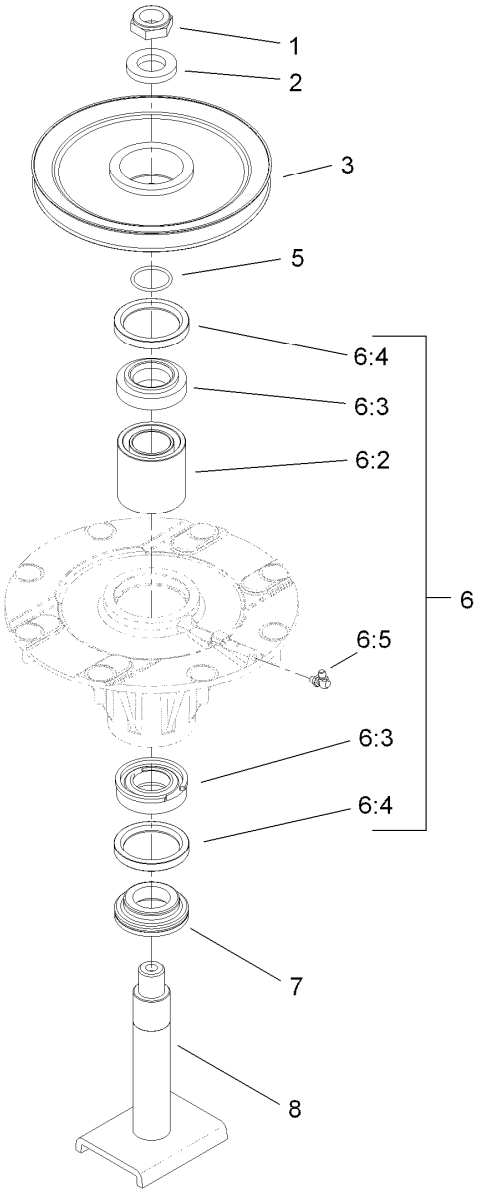


# High Spindle Assembly No. 117-9233

| *Ref.* | *Part Number* | *Qty.* | *Description* |
|---|---|---|---|
| 1 | 3296-60 | 1 | Nut-Lock, NI |
| 2 | 104-8322 | 1 | Washer-Hardened |
| 3 | 104-3548 | 1 | Pulley-Driven, High |
| 5 | 106-7159 | 1 | O-Ring |
| 6 | 119-4777 | 1 | Spindle ASM |
| 6:2 | 108-1954 | 1 | Spacer Set-Bearing |
| 6:3 | 110-8297 | 1 | Bearing ASM |
| 6:4 | 253-154 | 2 | Seal-Oil |
| 6:5 | 302-60 | 1 | Fitting-Grease |
| 7 | 69-6950 | 1 | Spacer-Shaft, Spindle |
| 8 | 108-1956 | 1 | Shaft ASM |

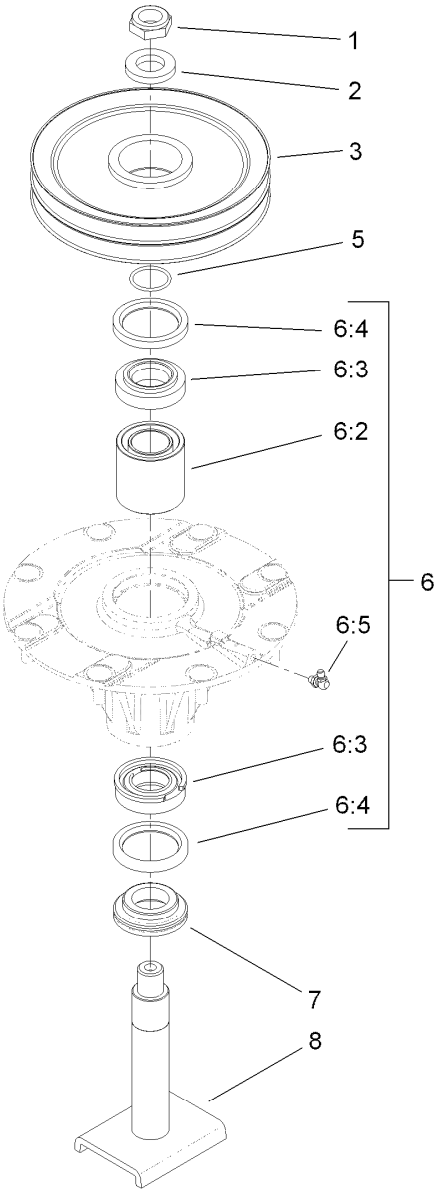


# Double Spindle Assembly No. 117-9234

| *Ref.* | *Part Number* | *Qty.* | *Description* |
|---|---|---|---|
| 1 | 3296-60 | 1 | Nut-Lock, NI |
| 2 | 104-8322 | 1 | Washer-Hardened |
| 3 | 104-3547 | 1 | Pulley-Driven, Double |
| 5 | 106-7159 | 1 | O-Ring |
| 6 | 119-4777 | 1 | Spindle ASM |
| 6:2 | 108-1954 | 1 | Spacer Set-Bearing |
| 6:3 | 110-8297 | 1 | Bearing ASM |
| 6:4 | 253-154 | 2 | Seal-Oil |
| 6:5 | 302-60 | 1 | Fitting-Grease |
| 7 | 69-6950 | 1 | Spacer-Shaft, Spindle |
| 8 | 108-1956 | 1 | Shaft ASM |

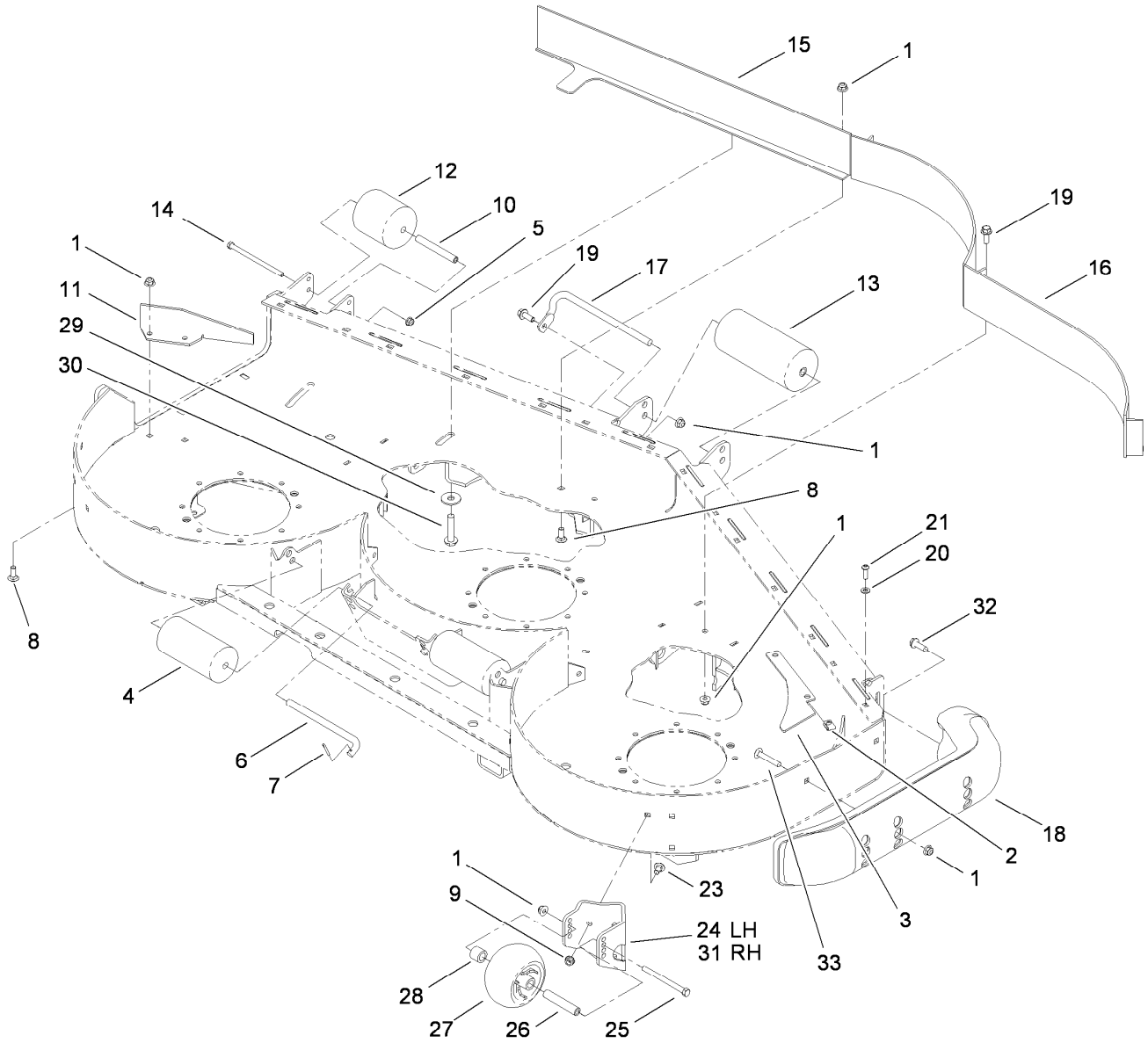


# Roller and Baffle Assembly

| Ref. | Part Number | Qty. | Description |
|---|---|---|---|
| 1 | 104-8301 | 11 | Nut-Flange, NI |
| 2 | 112-3306 | 2 | Nut |
| 3 | 115-1396 | 1 | Plate-Turbo |
| 4 | 36-1740 | 2 | Roller-Deck |
| 5 | 104-8300 | 1 | Nut-Flange, NI |
| 6 | 40-0340 | 2 | Shaft-Roller, Rear |
| 7 | 3272-11 | 2 | Pin-Cotter |
| 8 | 3231-2 | 3 | Screw-CARR |
| 9 | 3290-357 | 6 | Nut-HHF, Whiz |
| 10 | 105-4549 | 1 | Spacer-Roller |
| 11 | 106-3216-01 | 1 | Baffle-Discharge |
| 12 | 93-4803 | 1 | Roller-Deck |
| 13 | 68-6710 | 1 | Roller |
| 14 | 322-49 | 1 | Bolt-HH |
| 15 | 105-7669-01 | 1 | Baffle ASM |
| 16 | 105-7730-01 | 1 | Baffle ASM |

| Ref. | Part Number | Qty. | Description |
|---|---|---|---|
| 17 | 68-6840 | 1 | Shaft-Roller |
| 18 | 112-1479 | 1 | Skid-Bumper, Deck |
| 19 | 3234-42 | 4 | Screw-HHF |
| 20 | 3256-23 | 2 | Washer-Flat |
| 21 | 3274-104 | 2 | Screw-HSBH |
| 23 | 3231-1 | 6 | Screw-CARR |
| 24 | 106-7354-01 | 1 | Mount-Wheel, LH |
| 25 | 323-23 | 2 | Screw-HH |
| 26 | 98-7912 | 2 | Tube-Spanner |
| 27 | 1-603299 | 2 | Roller-Scalp, Anti |
| 28 | 98-7913 | 2 | Tube-Spacer |
| 29 | 105-7697 | 2 | Washer-Plastic |
| 30 | 3234-46 | 2 | Screw-HHF |
| 31 | 106-7355-01 | 1 | Mount-Wheel, RH |
| 32 | 9136144 | 1 | Screw-HWHTF |
| 33 | 3231-33 | 2 | Screw-CARR |

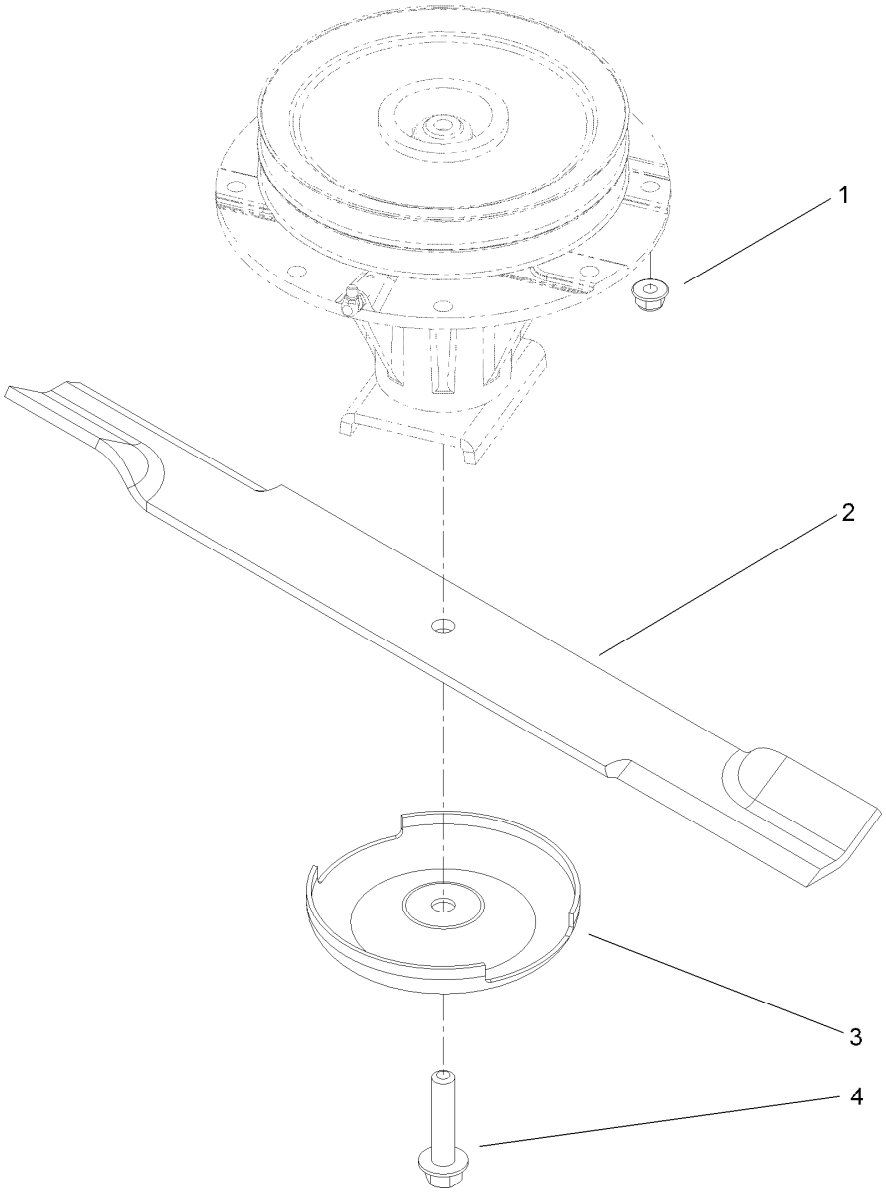


# Blade Assembly

| Ref. | Part Number | Qty. | Description |
|---|---|---|---|
| 1 | 104-8301 | 24 | Nut-Flange, NI |
| 2 | 110-0621-03 | 3 | Blade-Medium Flow |
| 2 | 110-0622-03 | 3 | Blade-Rotary, High Flow (24.5) ● |
| 2 | 110-0624-03 | 3 | Blade-Rotary, Atomic (24.5) ● |
| 3 | 72-9361 | 3 | Cup-Scalp, Anti |
| 4 | 92-5816 | 3 | Bolt-Blade |

● Optional Equipment

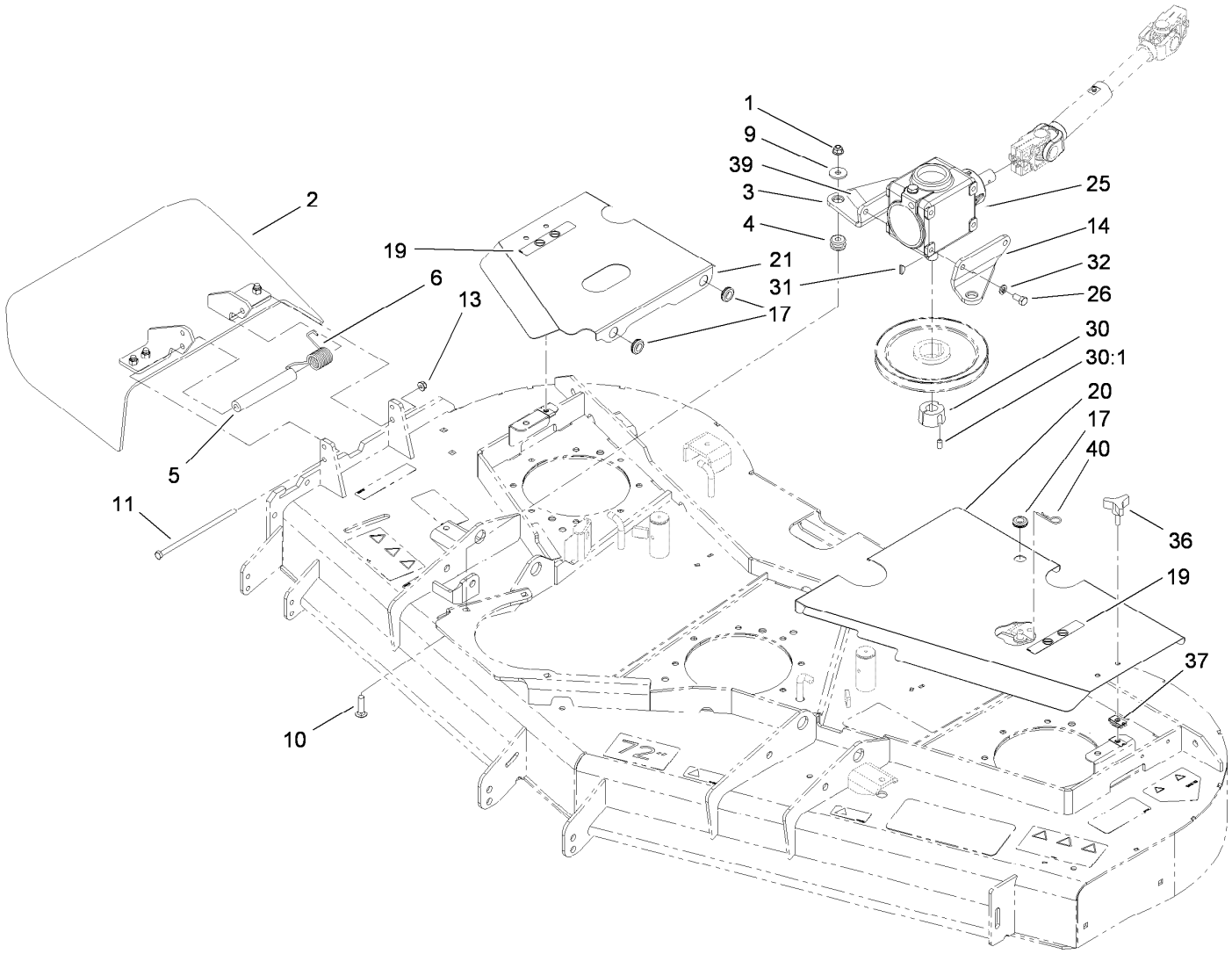


# Belt Cover, Gearbox and Baffle Assembly

| Ref. | Part Number | Qty. | Description |
|---|---|---|---|
| 1 | 104-8301 | 3 | Nut-Flange, NI |
| 2 | 108-2792 | 1 | Rubber Deflector ASM |
| 3 | 110-6385-03 | 1 | Bracket-Gearbox, RH |
| 4 | 63-9750 | 3 | Mount |
| 5 | 105-4622 | 1 | Spacer |
| 6 | 108-4052 | 1 | Spring-Torsion |
| 9 | 63-8410 | 3 | Washer |
| 10 | 3231-26 | 3 | Screw-CARR |
| 11 | 112-9557 | 1 | Screw-HH |
| 13 | 104-8300 | 1 | Nut-Flange, NI |
| 14 | 110-6384-03 | 1 | Bracket-Gearbox, LH |
| 17 | 112-9559 | 4 | Grommet |
| 19 | 93-6687 | 2 | Decal-No Step |

| Ref. | Part Number | Qty. | Description |
|---|---|---|---|
| 20 | 112-1455-03 | 1 | Cover-Deck, LH |
| 21 | 112-1456-03 | 1 | Cover-Deck, RH |
| 25 | 117-9245-03 | 1 | Gearbox ASM |
| 26 | 323-4 | 4 | Screw-HH |
| 30 | 23-1640 | 1 | Bushing-Taperlock |
| 30:1 | 3247-4 | 2 | Screw-Set |
| 31 | 3257-5 | 1 | Key-Woodruff |
| 32 | 3253-21 | 4 | Washer-Lock |
| 36 | 106-2240 | 2 | Knob |
| 37 | 110-3510 | 2 | Nut-Retainer |
| 39 | 93-6697 | 1 | Decal-Lube |
| 40 | 9335054 | 1 | Pin-Hair |

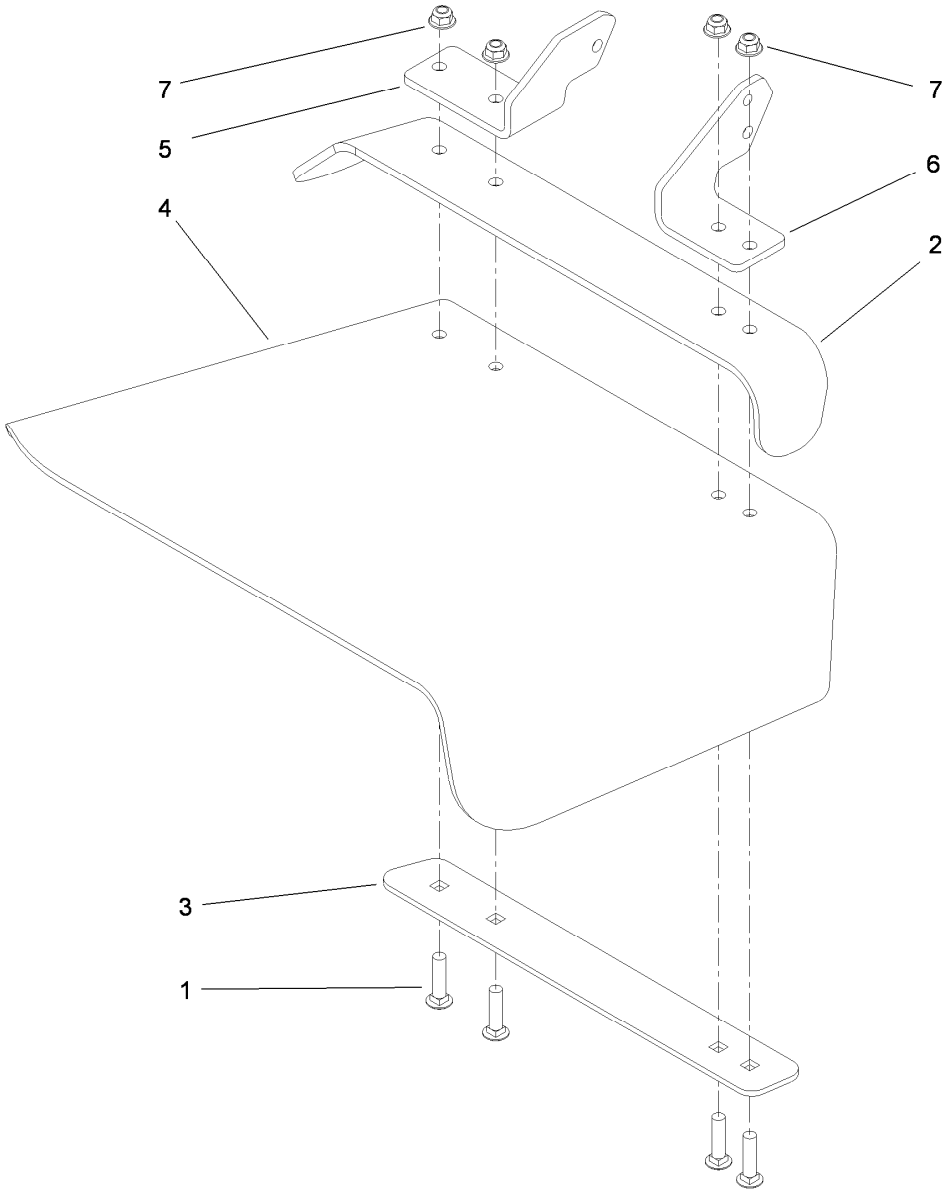


# Rubber Deflector Assembly No. 108-2792

| Ref. | Part Number | Qty. | Description |
|---|---|---|---|
| 1 | 3231-4 | 4 | Screw-CARR |
| 2 | 106-3246-01 | 1 | Deflector |
| 3 | 106-3248-03 | 1 | Strap-Discharge |
| 4 | 108-5029 | 1 | Deflector-Rubber |
| 5 | 108-4059-01 | 1 | Plate-Hinge, Rear |
| 6 | 106-3253-01 | 1 | Plate-Hinge, Front |
| 7 | 104-8301 | 4 | Nut-Flange, NI |

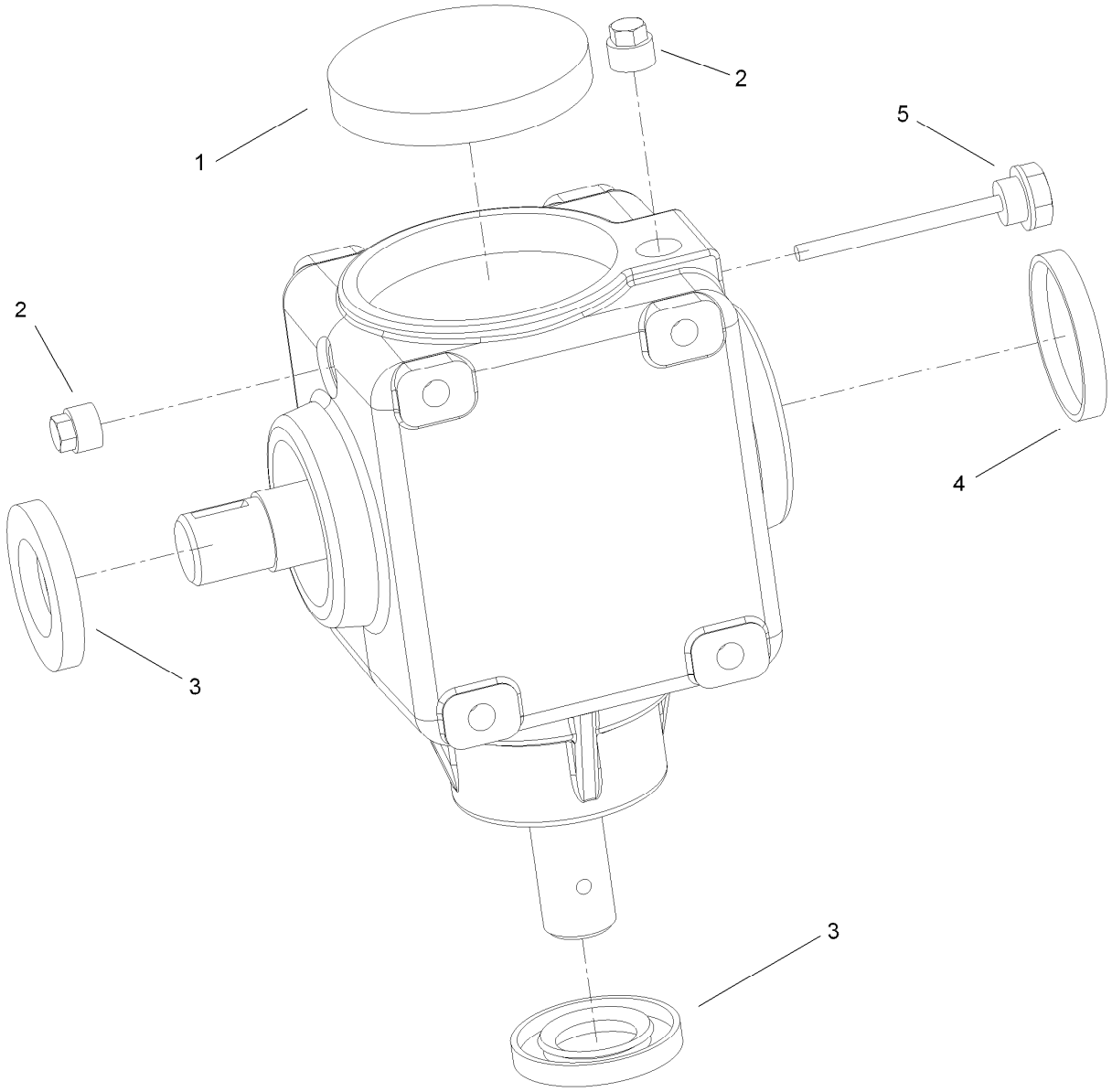


# Gearbox Assembly No. 117-9245-03

| *Ref.* | *Part Number* | *Qty.* | *Description* |
|---|---|---|---|
| 1 | 107-2932 | 1 | Cap-Oil |
| 2 | 107-2933 | 2 | Plug |
| 3 | 117-9247 | 2 | Seal |
| 4 | 107-2935 | 1 | Cap-Oil |
| 5 | 110-8283 | 1 | Plug-Filler, Dipstick |

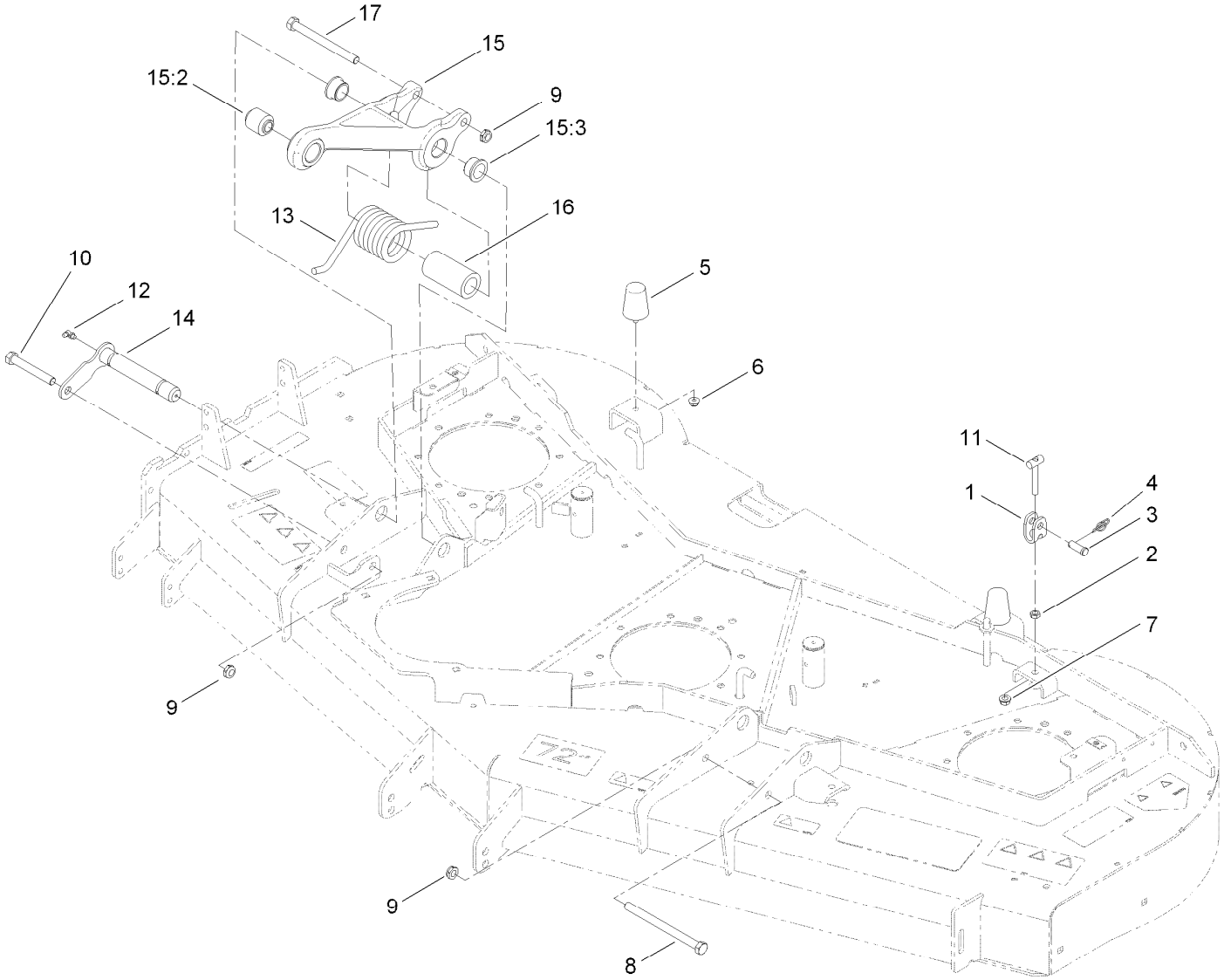


# Adjustment Link and Bumper Assembly

| Ref. | Part Number | Qty. | Description |
|---|---|---|---|
| 1 | 115-1429 | 4 | Yoke-Clevis |
| 2 | 3218-3 | 4 | Nut-Jam |
| 3 | 700601 | 4 | Pin-Clevis |
| 4 | 112-1491 | 4 | Pin-Cotter, Rue Ring |
| 5 | 110-5070 | 2 | Bumper-Neoprene |
| 6 | 104-8300 | 2 | Nut-Flange, NI |
| 7 | 3290-357 | 4 | Nut-HHF, Whiz |
| 8 | 325-33 | 1 | Screw-HH |
| 9 | 3296-45 | 4 | Nut-Lock, NI |
| 10 | 325-14 | 1 | Screw-HH |

| Ref. | Part Number | Qty. | Description |
|---|---|---|---|
| 11 | 115-1431 | 4 | T-Bar ASM |
| 12 | 302-60 | 4 | Fitting-Grease |
| 13 | 110-9828 | 2 | Spring-Torsion |
| 14 | 112-1622 | 2 | Pin |
| 15 | 112-1625 | 2 | Pull Link ASM |
| 15:2 | 107-2328 | 1 | Bushing |
| 15:3 | 114-5680 | 2 | Bushing-Flange |
| 16 | 110-9845 | 2 | Spacer-Plain |
| 17 | 325-22 | 2 | Screw-HH |

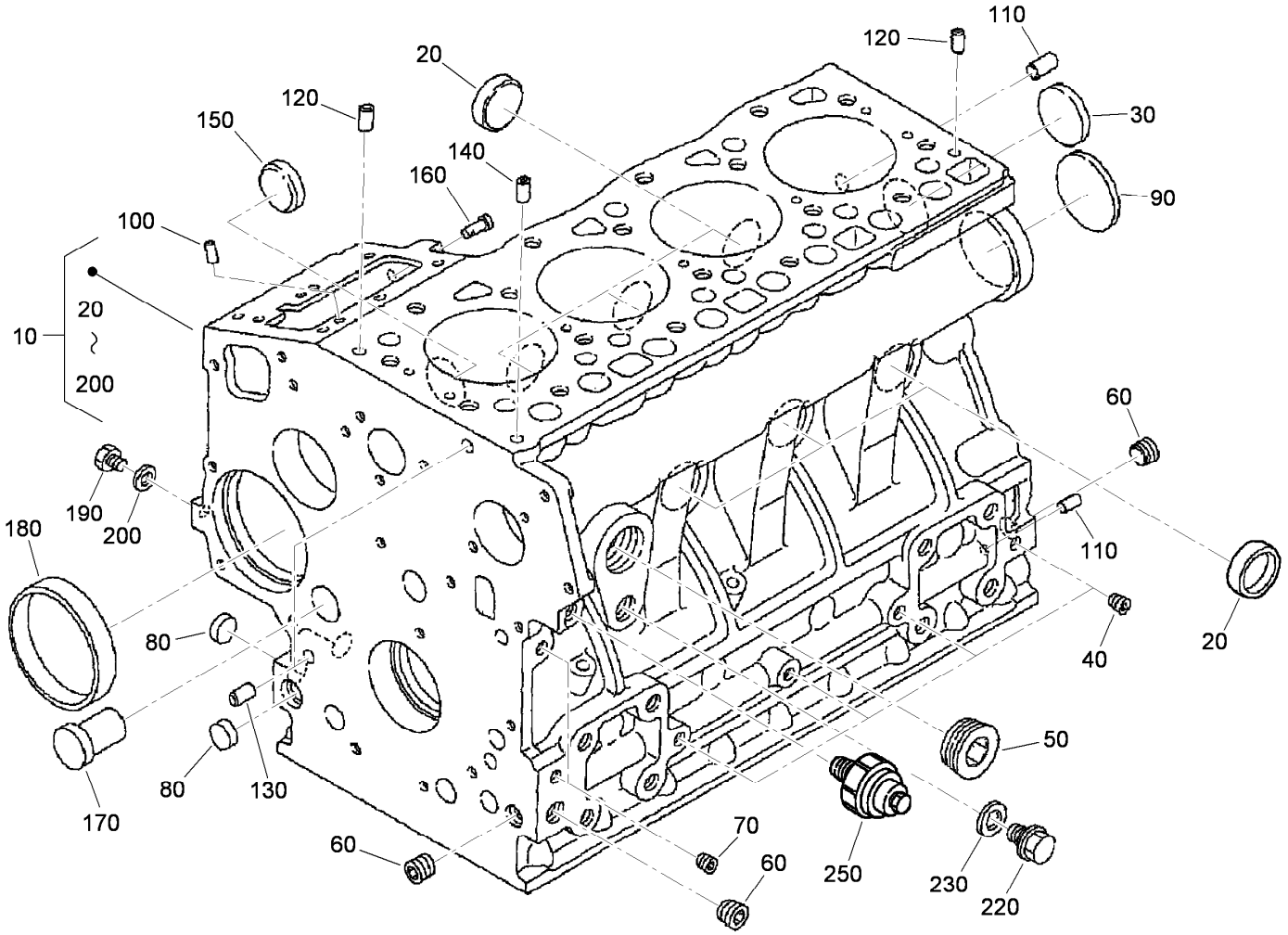


# Crankcase Assembly

| Ref. | Part Number | Qty. | Description |
|---|---|---|---|
| 10 | 120-2558 | 1 | Crankcase ASM |
| 20 | 98-9398 | 6 | Cap-Sealing |
| 30 | 98-7539 | 1 | Cap-Sealing |
| 40 | 98-7540 | 4 | Plug |
| 50 | 105-3779 | 1 | Plug |
| 60 | 98-9597 | 3 | Plug |
| 70 | 98-7487 | 2 | Plug |
| 80 | 98-9379 | 3 | Plug-Expansion |
| 90 | 98-9668 | 1 | Plug-Expansion |
| 100 | 98-9375 | 2 | Pin-Straight |
| 110 | 98-9377 | 2 | Pin-Straight |
| 120 | 98-9376 | 2 | Pin-Straight |

| Ref. | Part Number | Qty. | Description |
|---|---|---|---|
| 130 | 98-9387 | 2 | Pin-Pipe |
| 140 | 98-9539 | 1 | Pin-Pipe |
| 150 | 98-9599 | 1 | Plug |
| 160 | 105-3796 | 1 | Pin-Spring, Start |
| 170 | 98-9675 | 1 | Plug |
| 180 | 98-9656 | 1 | Bushing-Governor, Gear |
| 190 | 120-2559 | 1 | Plug |
| 200 | 98-7428 | 1 | Gasket |
| 220 | 99-3447 | 1 | Plug |
| 230 | 106-7056 | 1 | Gasket |
| 250 | 98-9416 | 1 | Switch-Oil |

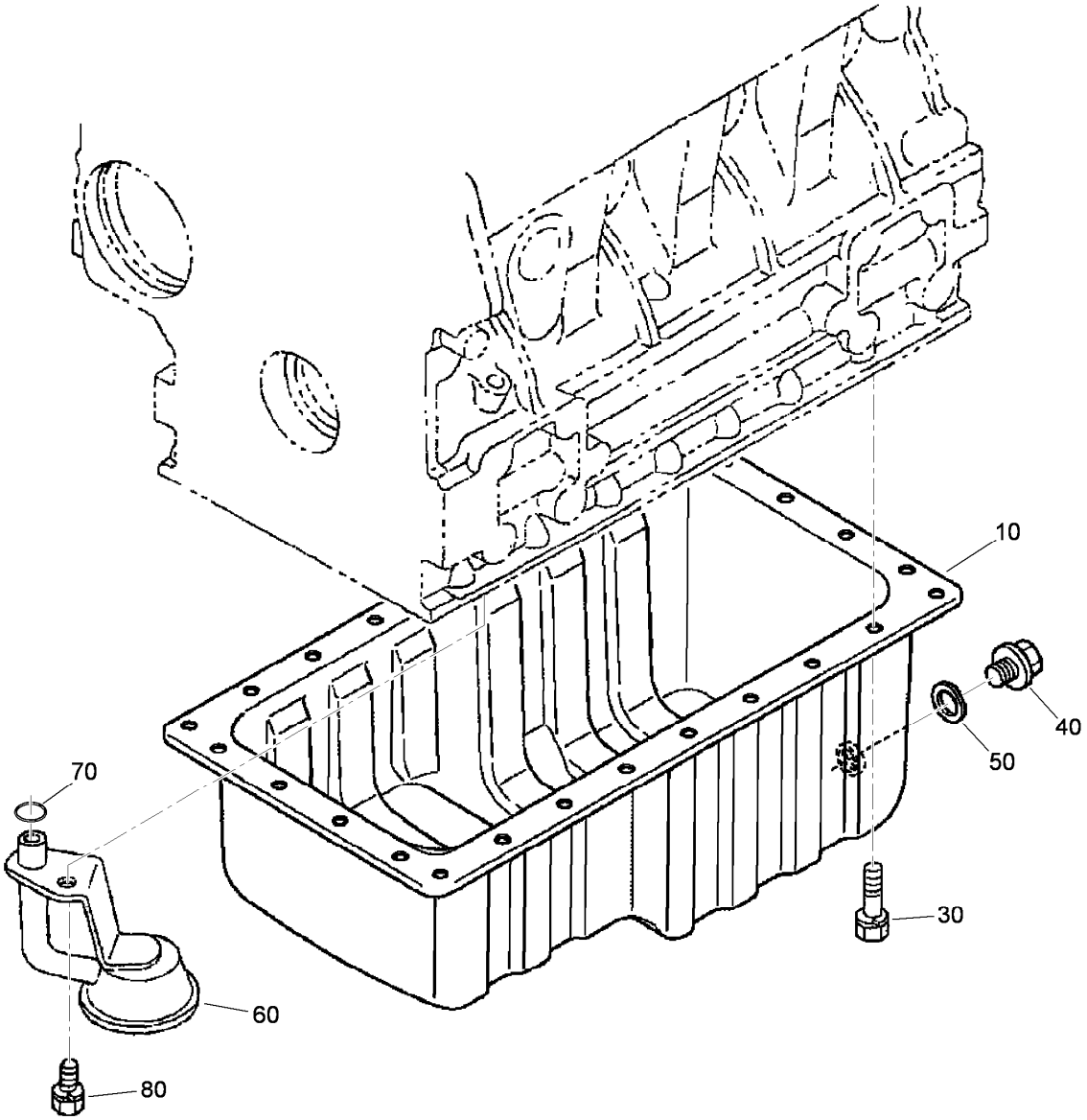


# Oil Pan Assembly

| Ref. | Part Number | Qty. | Description |
|---|---|---|---|
| 10 | 112-0186 | 1 | Pan-Oil |
| 30 | 98-9351 | 26 | Bolt |
| 40 | 114-8151 | 1 | Plug-Drain |
| 50 | 98-7524 | 1 | Gasket |
| 60 | 112-7003 | 1 | Head-Filter, Oil |
| 70 | 105-3776 | 1 | O-Ring |
| 80 | 98-7526 | 1 | Bolt |

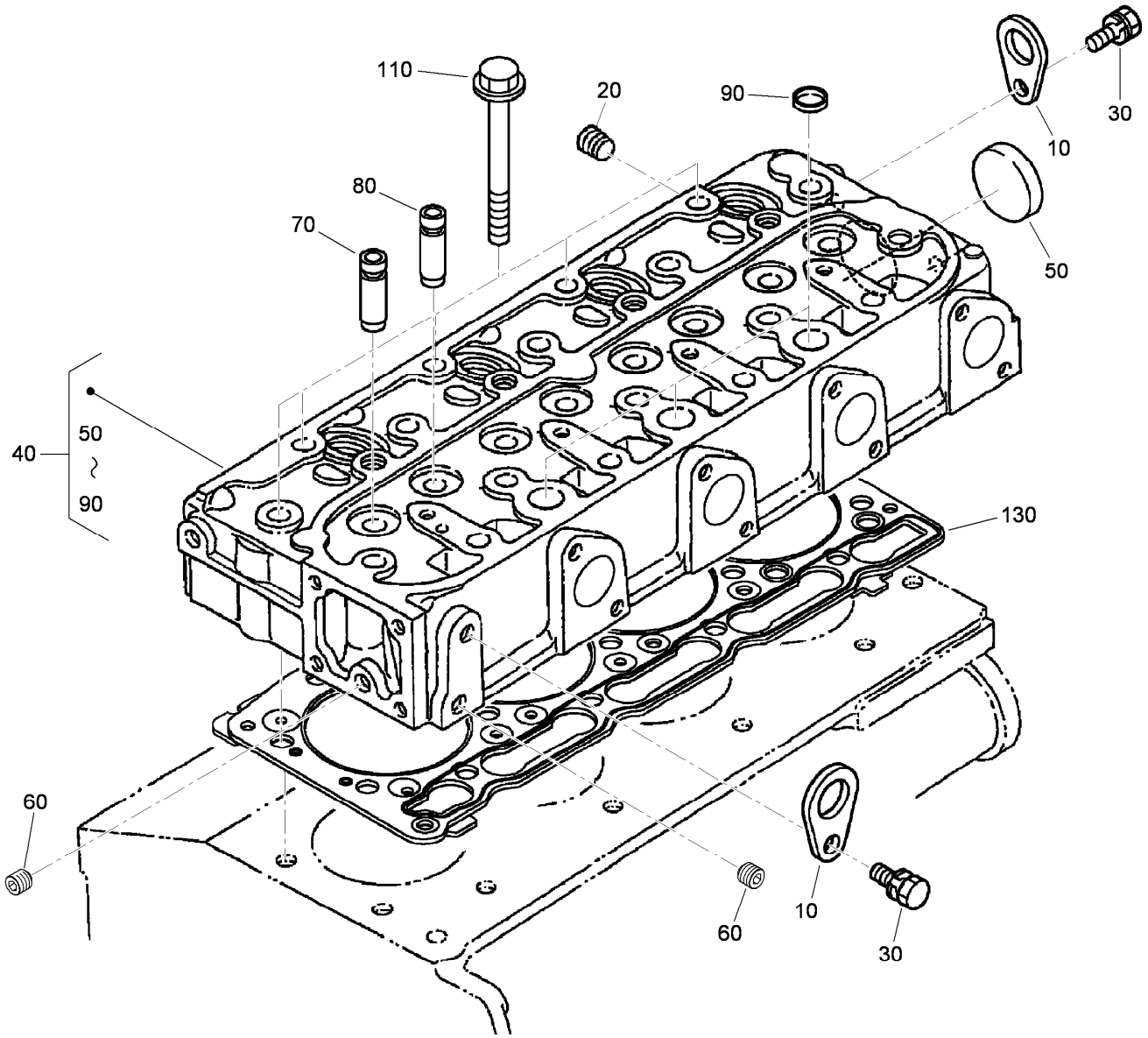


# Cylinder Head Assembly

| Ref. | Part Number | Qty. | Description |
|---|---|---|---|
| 10 | 98-7531 | 2 | Hook-Engine |
| 20 | 98-9444 | 1 | Plug |
| 30 | 100-9195 | 2 | Bolt |
| 40 | 115-3012 | 1 | Cylinder Head ASM |
| 50 | 105-3705 | 1 | Cap-Sealing |
| 60 | 98-7540 | 2 | Plug |
| 70 | 107-9066 | 4 | Guide-Valve, Inlet |
| 80 | 107-9067 | 4 | Guide-Valve, Exhaust |
| 90 | 98-9389 | 3 | Cap-Sealing |
| 110 | 98-9479 | 18 | Bolt-Head, Cylinder |
| 130 | 108-2855 | 1 | Gasket-Head, Cylinder |

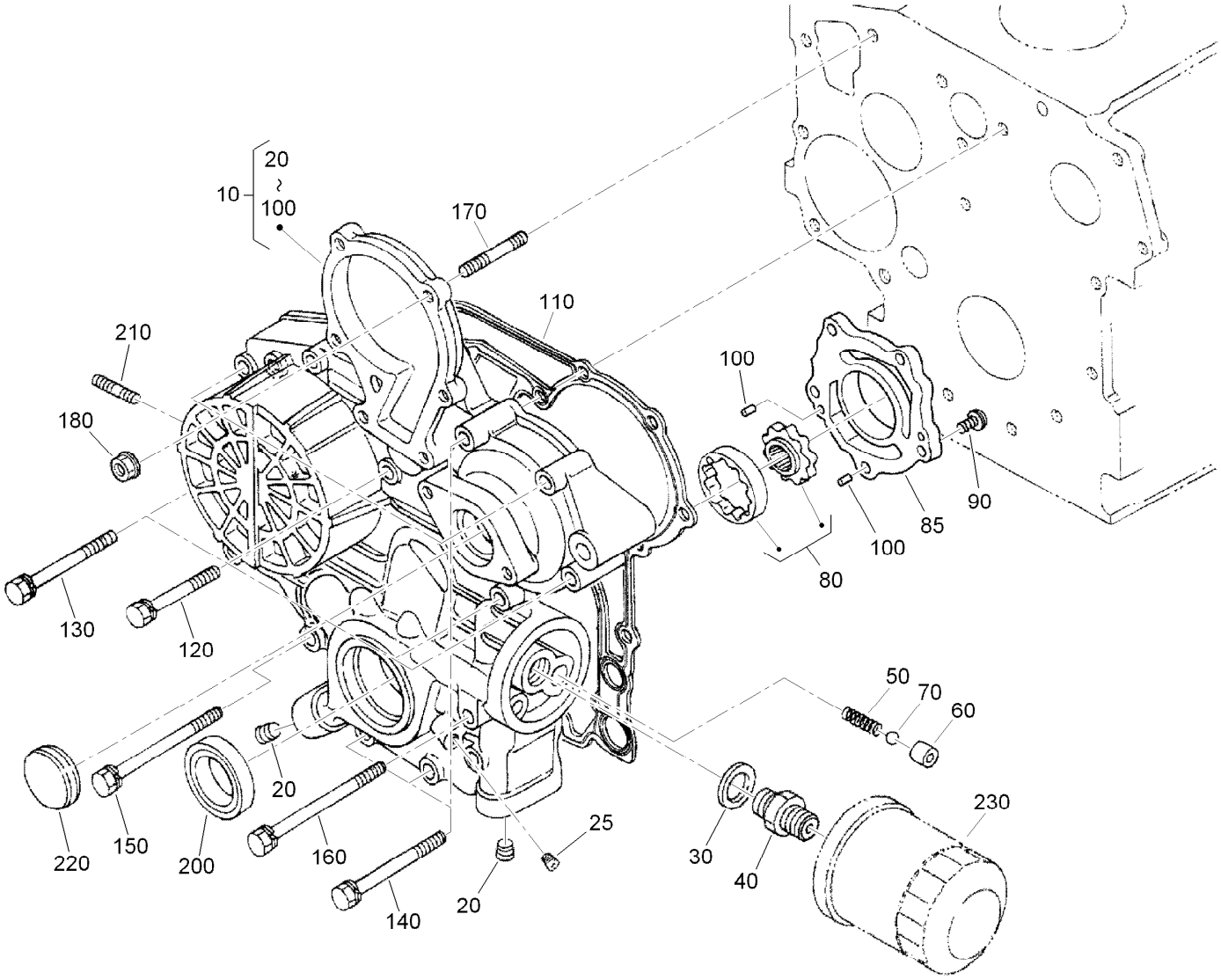


# Gear Case Assembly

| Ref. | Part Number | Qty. | Description |
|---|---|---|---|
| 10 | 115-4105 | 1 | Gear Case ASM |
| 20 | 98-9598 | 2 | Plug |
| 25 | 98-7487 | 1 | Plug |
| 30 | 98-7562 | 1 | Washer-Plain |
| 40 | 98-9388 | 1 | Joint-Pipe |
| 50 | 98-9544 | 1 | Spring |
| 60 | 98-9543 | 1 | Seat-Valve |
| 70 | 98-9380 | 1 | Ball |
| 80 | 98-9540 | 1 | Oil Pump Rotor ASM |
| 85 | 107-9069 | 1 | Cover-Pump, Oil |
| 90 | 107-9071 | 5 | Screw |
| 100 | 107-9072 | 2 | Pin-Straight |

| Ref. | Part Number | Qty. | Description |
|---|---|---|---|
| 110 | 98-9633 | 1 | Gasket-Case, Gear |
| 120 | 107-9073 | 3 | Bolt |
| 130 | 105-3797 | 4 | Bolt |
| 140 | 98-9356 | 4 | Bolt |
| 150 | 107-9074 | 1 | Bolt |
| 160 | 98-9586 | 1 | Bolt |
| 170 | 105-3709 | 1 | Stud |
| 180 | 100-2203 | 1 | Nut-Flange |
| 200 | 119-8038 | 1 | Seal-Oil |
| 210 | 105-3710 | 2 | Stud |
| 220 | 98-9641 | 1 | Cover-Case, Gear |
| 230 | 108-3841 | 1 | Filter-Oil |

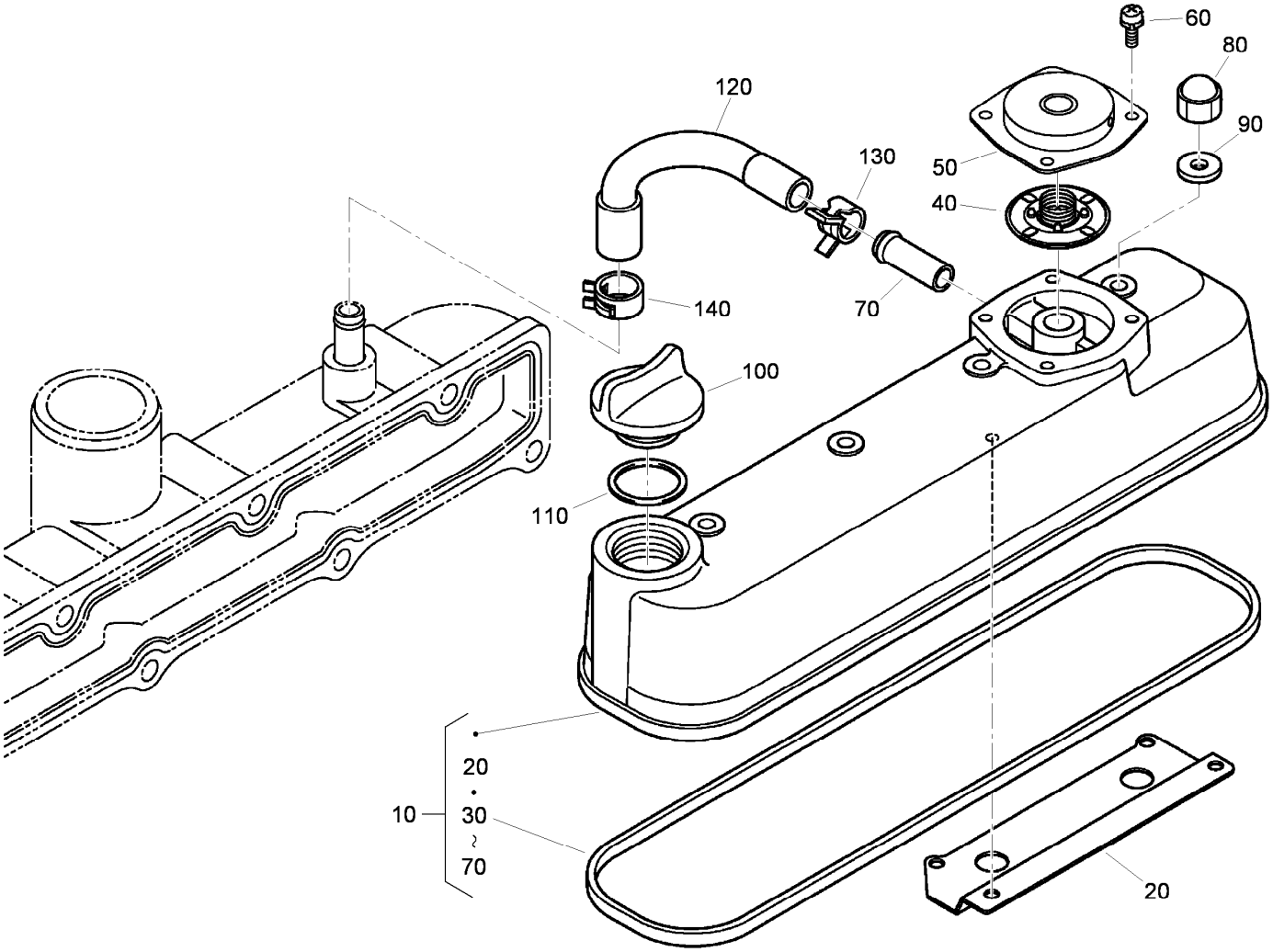


# Cylinder Head Cover Assembly

| Ref. | Part Number | Qty. | Description |
|---|---|---|---|
| 10 | 115-4130 | 1 | Cylinder Head Cover ASM |
| 20 | 108-2857 | 1 | Shield-Breather |
| 30 | 105-3712 | 1 | Gasket-Cover, Head |
| 40 | 110-3715 | 1 | Valve-Breather |
| 50 | 110-3714 | 1 | Cover-Breather |
| 60 | 98-9364 | 4 | Screw (With Washer) |
| 70 | 98-7766 | 1 | Pipe-Return, Water |
| 80 | 98-9455 | 4 | Nut-Cap |
| 90 | 98-9454 | 4 | Gasket |
| 100 | 107-9075 | 1 | Plug-Filler, Oil |
| 110 | 120-2560 | 1 | O-Ring |
| 120 | 108-2858 | 1 | Tube-Breather |
| 130 | 108-2859 | 1 | Clamp-Hose |
| 140 | 108-2860 | 1 | Clamp-Hose |

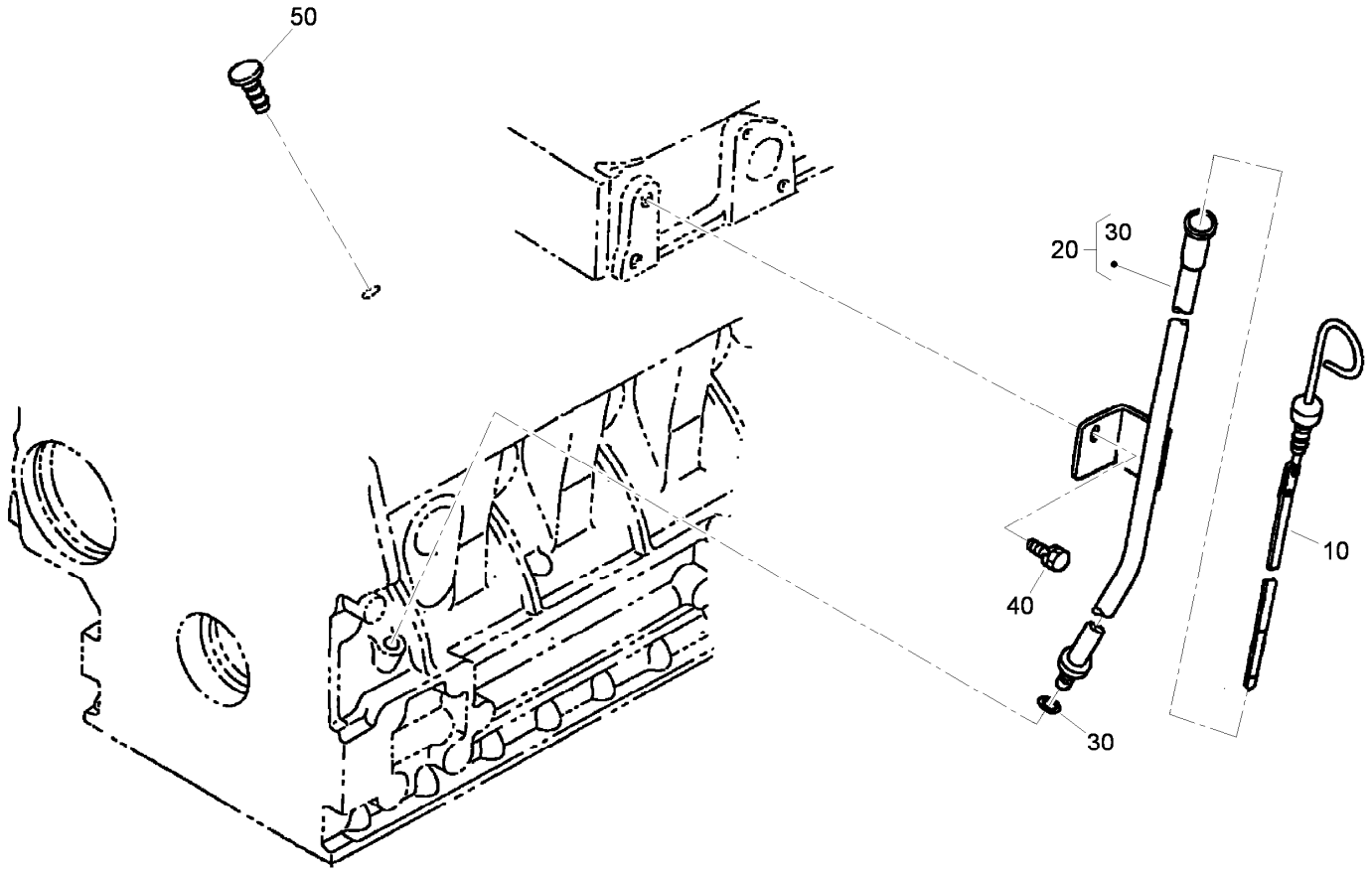


# Dipstick and Guide Assembly

| *Ref.* | *Part Number* | *Qty.* | *Description* |
|---|---|---|---|
| 10 | 98-9670 | 1 | Gauge-Oil |
| 20 | 98-9672 | 1 | Oil Gauge Guide ASM |
| 30 | 98-9722 | 1 | O-Ring |
| 40 | 100-9195 | 1 | Bolt |
| 50 | 110-3720 | 1 | Plug-Gauge, Oil |

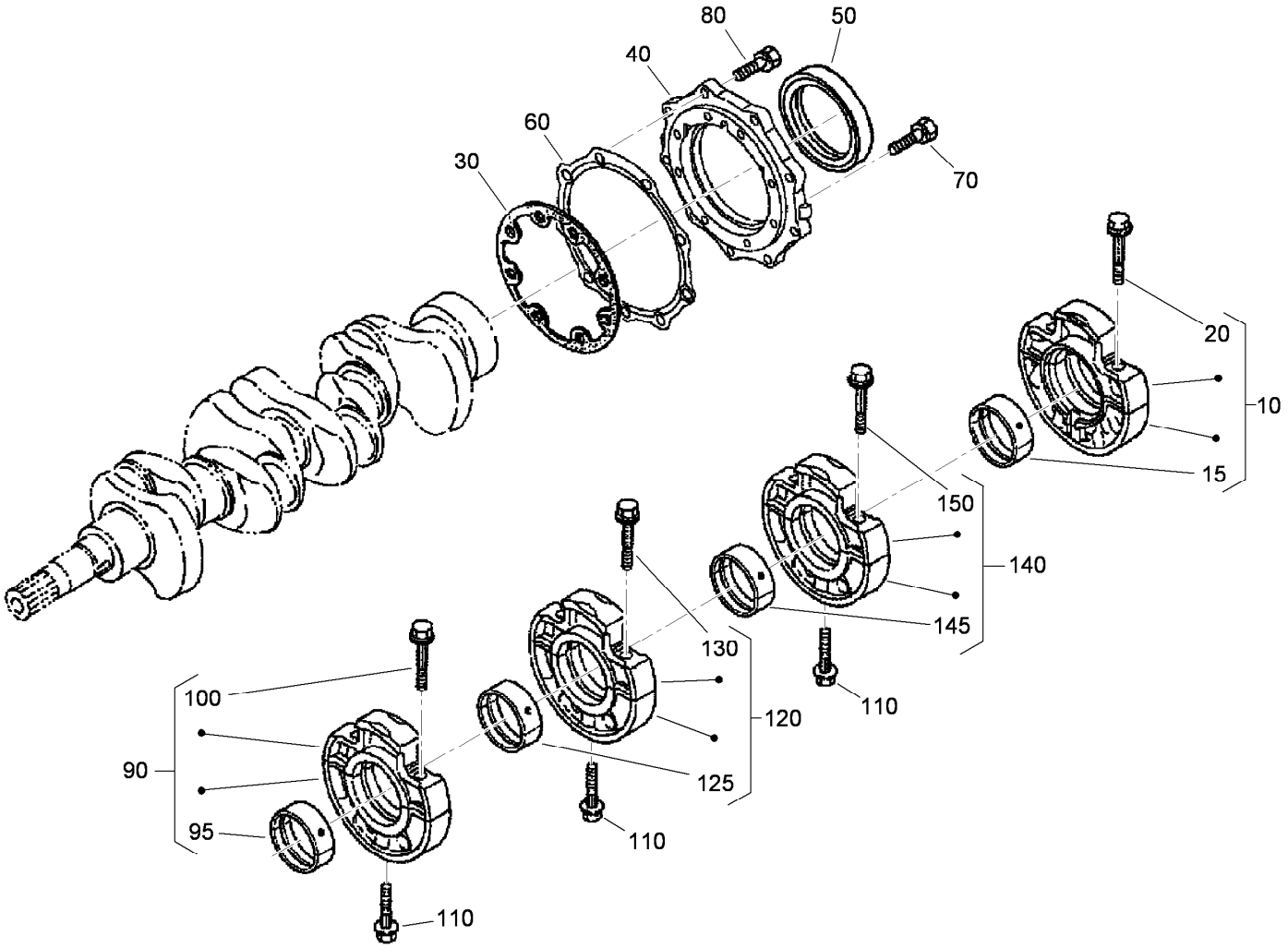


# Main Bearing Case Assembly

| Ref. | Part Number | Qty. | Description |
|---|---|---|---|
| 10 | 112-7026 | 1 | Wheel Bearing Case ASM |
| 15 | 115-4121 | 1 | Metal-Crankshaft (STD) |
| 20 | 98-9484 | 2 | Bolt-Case, Bearing |
| 30 | 98-9634 | 1 | Gasket-Case, Bearing |
| 40 | 112-7046 | 1 | Cover-Case, Bearing |
| 50 | 112-0180 | 1 | Seal-Oil |
| 60 | 112-7037 | 1 | Gasket-Cover, Case |
| 70 | 98-9352 | 8 | Bolt |
| 80 | 98-7568 | 9 | Bolt |
| 90 | 115-4106 | 1 | Main Bearing Case ASM |

| Ref. | Part Number | Qty. | Description |
|---|---|---|---|
| 95 | 98-9524 | 1 | Metal-Crankshaft (STD Set) |
| 100 | 98-9484 | 2 | Bolt-Case, Bearing |
| 110 | 98-9485 | 3 | Bolt-Case, Bearing |
| 120 | 115-4107 | 1 | Main Bearing Case ASM |
| 125 | 98-9524 | 1 | Metal-Crankshaft (STD Set) |
| 130 | 98-9484 | 2 | Bolt-Case, Bearing |
| 140 | 115-4108 | 1 | Main Bearing Case ASM |
| 145 | 98-9524 | 1 | Metal-Crankshaft (STD Set) |
| 150 | 98-9484 | 2 | Bolt-Case, Bearing |

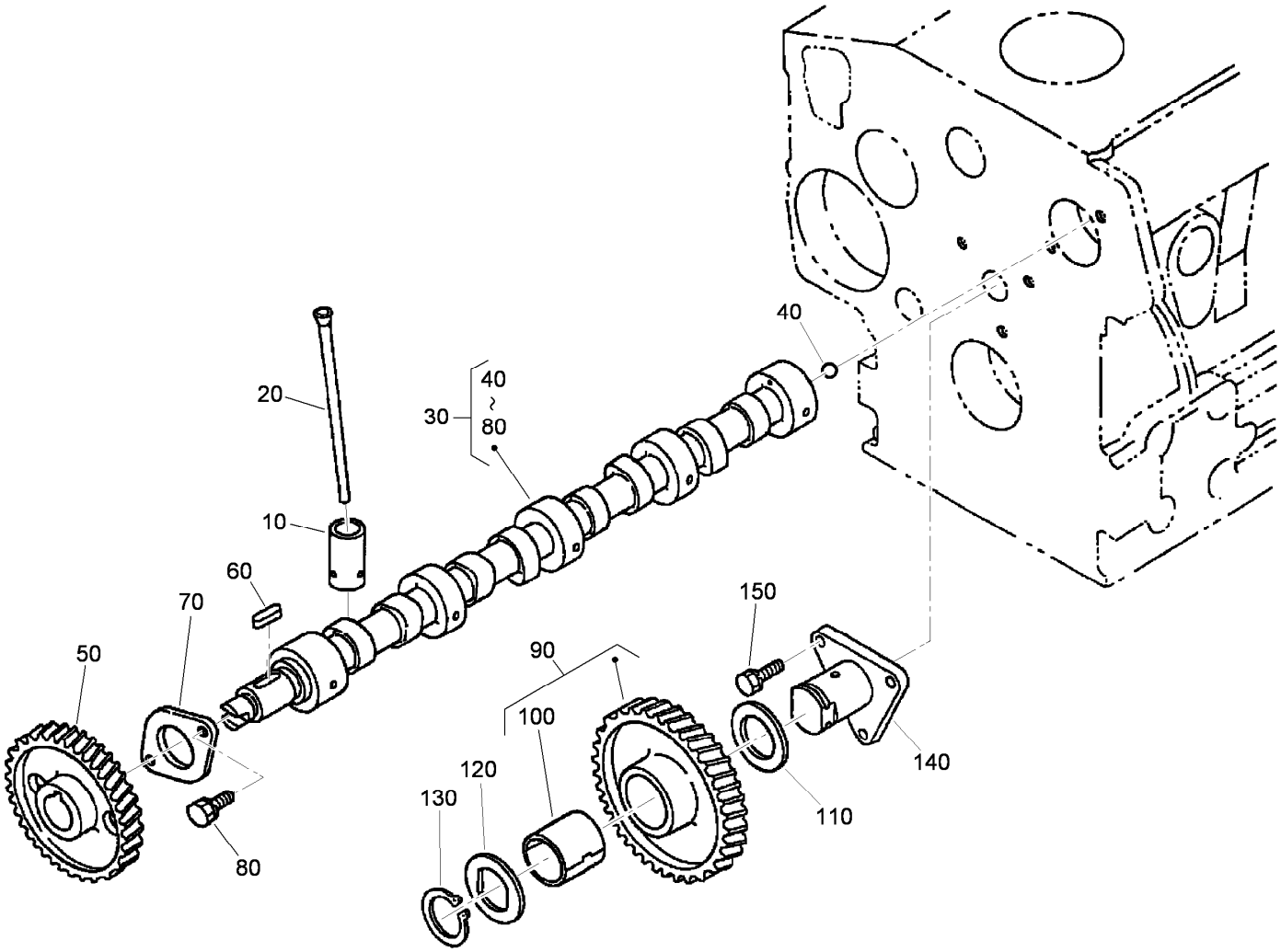


# Cam Shaft and Idle Gear Assembly

| *Ref.* | *Part Number* | *Qty.* | *Description* |
|---|---|---|---|
| 10 | 112-0185 | 8 | Tappet |
| 20 | 98-9509 | 8 | Rod-Push |
| 30 | 120-3116 | 1 | Camshaft ASM |
| 40 | 110-3729 | 1 | Ball |
| 50 | 98-9512 | 1 | Gear-Cam |
| 60 | 98-9378 | 1 | Key-Feather |
| 70 | 98-9510 | 1 | Stopper-Camshaft |
| 80 | 98-7692 | 2 | Bolt |
| 90 | 117-7584 | 1 | Idler Gear ASM |
| 100 | 117-7585 | 1 | Bushing-Gear, Idle |
| 110 | 98-9535 | 1 | Collar-Gear, Idle |
| 120 | 98-9536 | 1 | Collar-Gear, Idle |
| 130 | 98-9534 | 1 | Circlip-Gear, Idle |
| 140 | 98-9533 | 1 | Shaft-Gear, Idle |
| 150 | 98-7692 | 3 | Bolt |

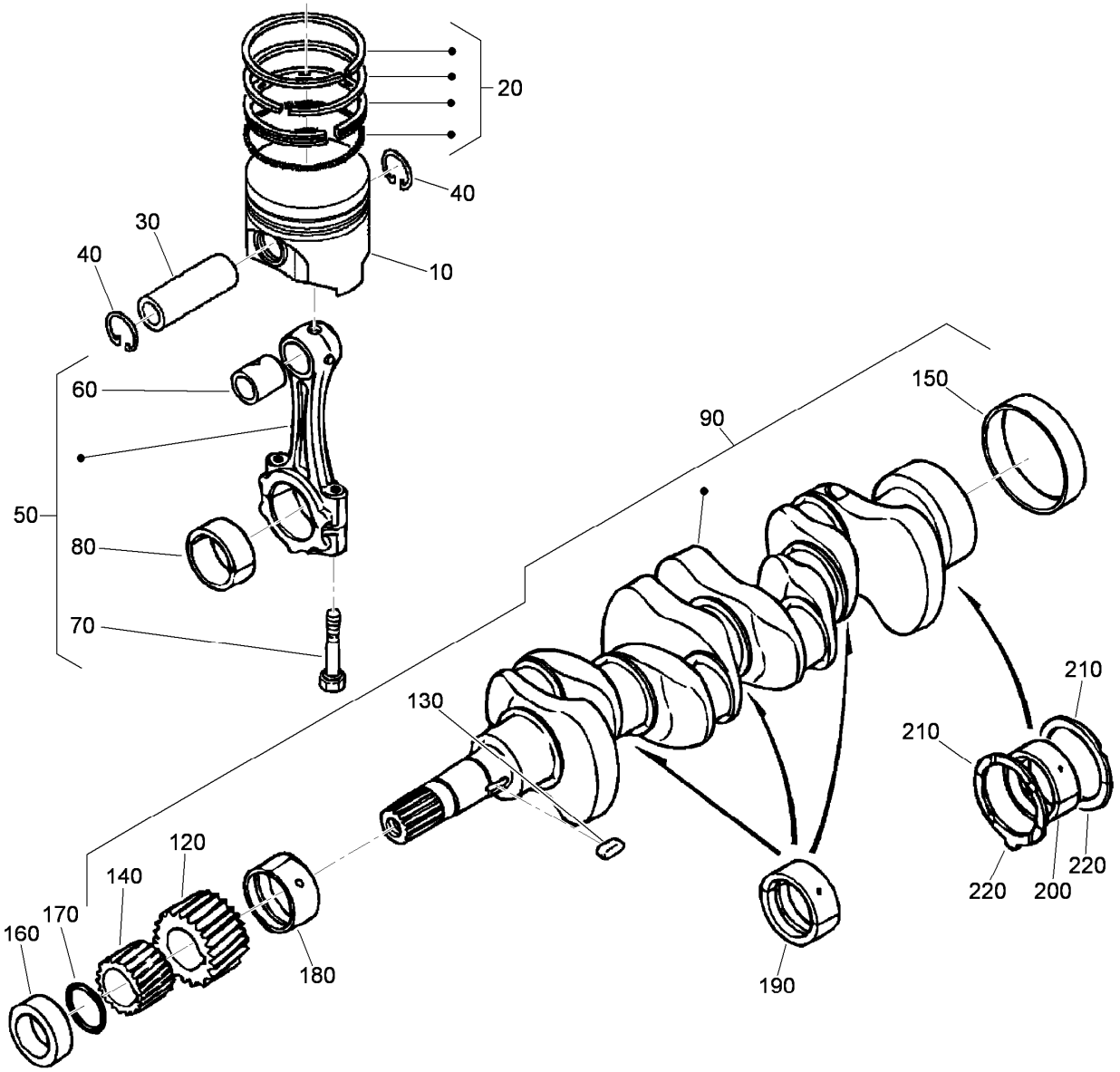


# Piston and Crankshaft Assembly

| Ref. | Part Number | Qty. | Description |
|---|---|---|---|
| 10 | 112-8404 | 4 | Piston (STD) |
| 10 | 112-8414 | 4 | Piston (+0.5Mm) |
| 20 | 98-9551 | 4 | Piston Ring ASM (STD) |
| 20 | 108-1404 | 4 | Piston Ring ASM (0.5Mm) |
| 30 | 98-9513 | 4 | Pin-Piston |
| 40 | 98-9514 | 8 | Circlip-Pin, Piston |
| 50 | 115-3013 | 4 | Connecting Rod ASM |
| 60 | 115-3014 | 4 | Bushing-Pin, Piston |
| 70 | 98-9517 | 8 | Bolt-Rod, Connecting |
| 80 | 98-9520 | 4 | Bearing-Rod (0.4Mm) |
| 80 | 98-9519 | 4 | Bearing-Rod (0.2Mm) |
| 80 | 98-9518 | 4 | Metal-Crankpin (STD) |
| 90 | 120-2561 | 1 | Crankshaft ASM |
| 120 | 117-7561 | 1 | Gear-Crankshaft |
| 130 | 98-9666 | 1 | Key |
| 140 | 98-9542 | 1 | Gear-Drive, Oil Pump |
| 150 | 98-9522 | 1 | Sleeve-Crankshaft |

| Ref. | Part Number | Qty. | Description |
|---|---|---|---|
| 160 | 98-9521 | 1 | Collar-Crankshaft |
| 170 | 105-3783 | 1 | O-Ring |
| 180 | 98-9523 | 1 | Metal Crankshaft (STD) |
| 180 | 98-9528 | 1 | Bearing-Main (0.2Mm) |
| 180 | 98-9529 | 1 | Bearing-Main (0.4Mm) |
| 190 | 98-9524 | 3 | Metal-Crankshaft (STD Set) |
| 190 | 98-9530 | 3 | Bearing-Main (0.2Mm) |
| 190 | 98-9531 | 3 | Bearing-Main (0.4Mm) |
| 200 | 115-4121 | 1 | Metal-Crankshaft (STD) |
| 200 | 112-7039 | 1 | Metal-Crankshaft (0.2Mm) |
| 200 | 112-7040 | 1 | Metal-Crankshaft (-0.4Mm) |
| 210 | 98-9413 | 2 | Bearing-Thrust (STD) |
| 210 | 98-9414 | 2 | Bearing-Thrust (0.2Mm) |
| 210 | 98-9415 | 2 | Bearing-Thrust (0.4Mm) |
| 220 | 98-9688 | 2 | Bearing-Thrust (STD) |
| 220 | 98-9689 | 2 | Bearing-Thrust (0.2Mm) |
| 220 | 98-9690 | 2 | Bearing-Thrust (0.4Mm) |

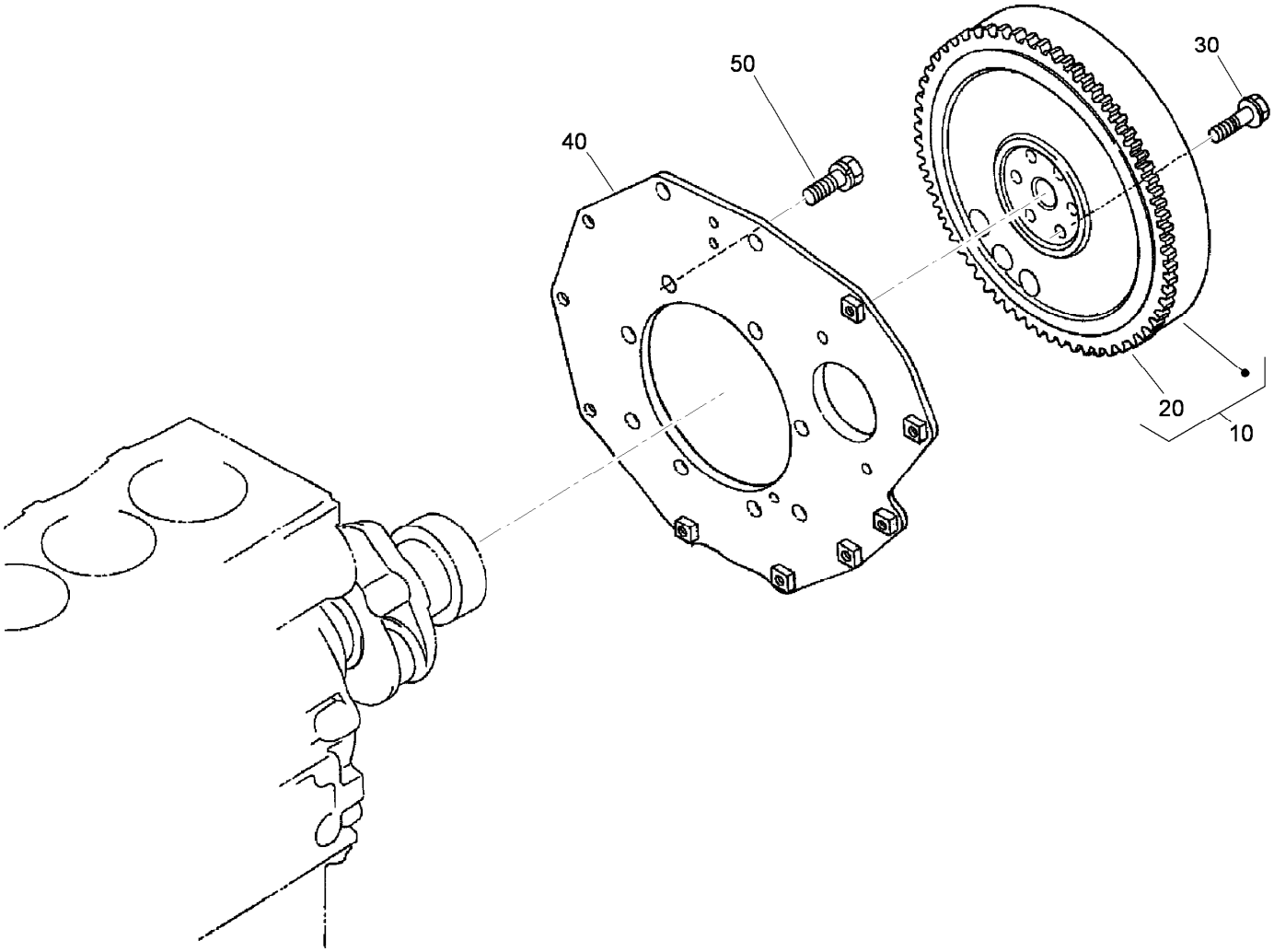


# Flywheel Assembly

| Ref. | Part Number | Qty. | Description |
|---|---|---|---|
| 10 | 105-3721 | 1 | Flywheel ASM |
| 20 | 115-3015 | 1 | Gear-Ring |
| 30 | 98-9537 | 6 | Bolt-Flywheel |
| 40 | 98-9486 | 1 | Plate-End, Rear |
| 50 | 98-9392 | 8 | Bolt |

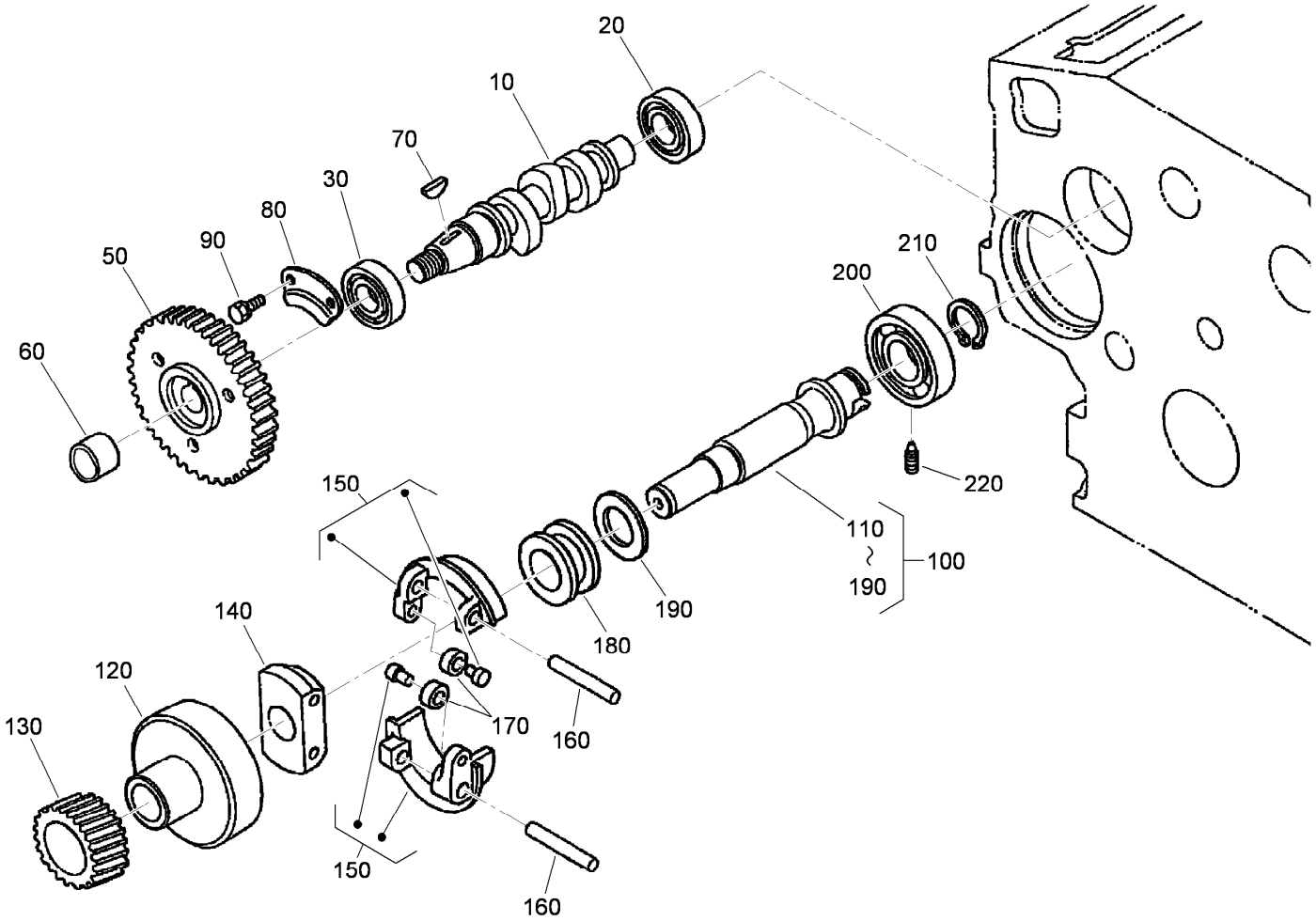


# Fuel Camshaft and Governor Shaft Assembly

| Ref. | Part Number | Qty. | Description |
|---|---|---|---|
| 10 | 105-3723 | 1 | Camshaft-Fuel |
| 20 | 107-9077 | 1 | Bearing-Ball |
| 30 | 107-9078 | 1 | Bearing-Ball |
| 50 | 120-2562 | 1 | Gear-Pump, Injection |
| 60 | 98-9590 | 1 | Nut-Cap |
| 70 | 98-9595 | 1 | Key-Woodruff |
| 80 | 98-9511 | 1 | Stopper-Fuel, Camshaft |
| 90 | 98-7692 | 2 | Bolt |
| 100 | 105-3724 | 1 | Governor Shaft ASM |
| 110 | 105-3725 | 1 | Shaft, Governor |
| 120 | 98-9562 | 1 | Holder-Gear, Governor |

| Ref. | Part Number | Qty. | Description |
|---|---|---|---|
| 130 | 98-9673 | 1 | Gear-Governor |
| 140 | 98-9561 | 1 | Holder-Weight, Governor |
| 150 | 98-9559 | 2 | Governor Weight ASM |
| 160 | 98-9560 | 2 | Shaft-Weight, Governor |
| 170 | 98-9692 | 2 | Roller |
| 180 | 98-9563 | 1 | Sleeve-Governor |
| 190 | 98-9564 | 1 | Washer-Thrust |
| 200 | 107-9079 | 1 | Bearing-Ball |
| 210 | 98-9657 | 1 | Circlip-Shaft, Governor |
| 220 | 98-9565 | 1 | Screw-Set |

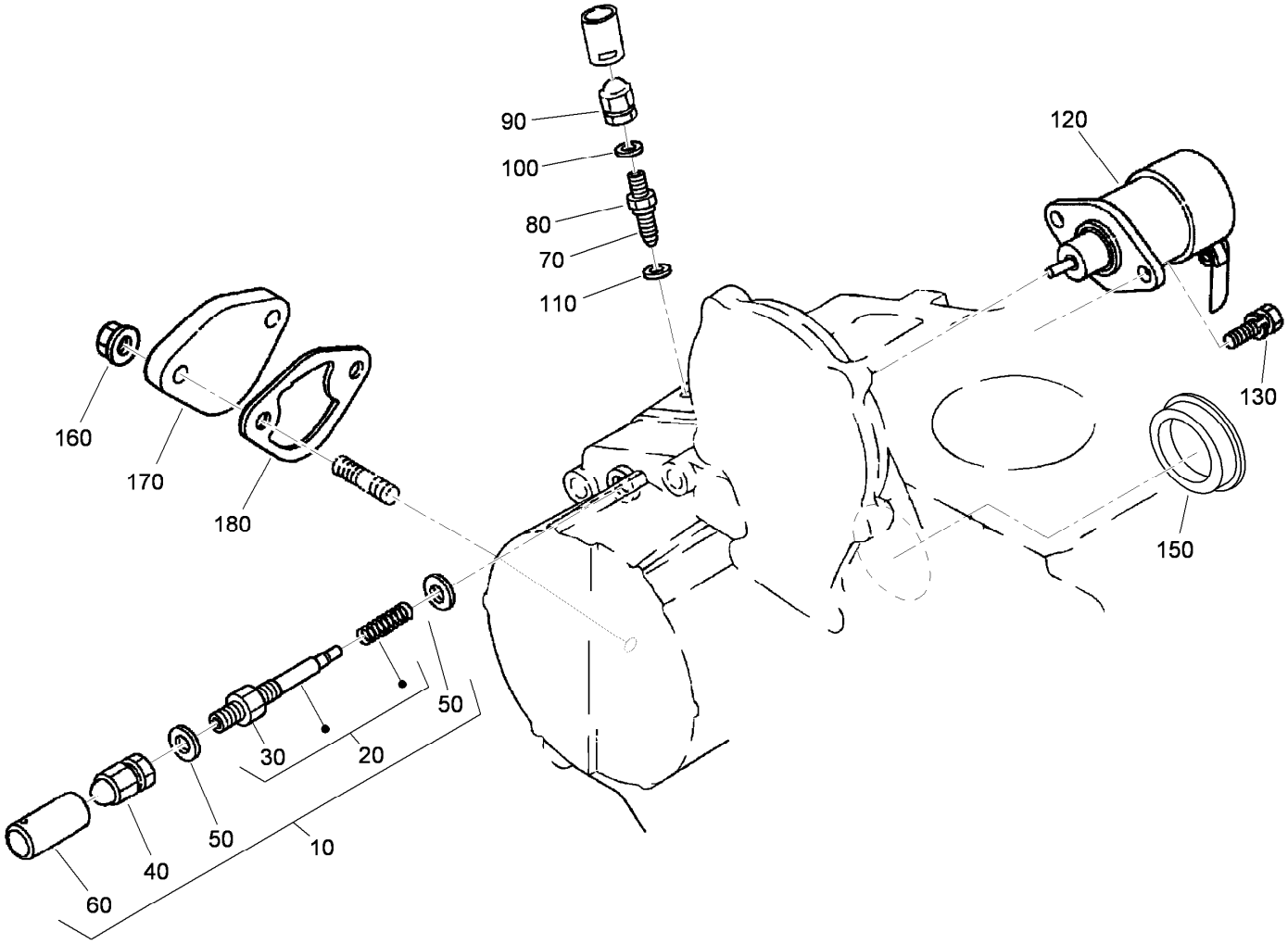


# Idle Apparatus Assembly

| Ref. | Part Number | Qty. | Description |
|---|---|---|---|
| 10 | 98-9678 | 1 | Idle Apparatus ASM |
| 20 | 112-7014 | 1 | Adjusting Bolt ASM |
| 30 | 98-9439 | 1 | Nut |
| 40 | 112-0181 | 1 | Nut |
| 50 | 98-7654 | 2 | Gasket |
| 60 | 98-7656 | 1 | Cap |
| 70 | 112-7015 | 1 | Bolt-Adjusting |
| 80 | 100-2175 | 1 | Nut-Lock |
| 90 | 112-0181 | 1 | Nut |

| Ref. | Part Number | Qty. | Description |
|---|---|---|---|
| 100 | 98-7654 | 1 | Gasket |
| 110 | 107-9081 | 1 | Gasket |
| 120 | 104-5155 | 1 | Solenoid-Stop |
| 130 | 115-3039 | 2 | Bolt-HSH |
| 150 | 112-7016 | 1 | Cover-Pump |
| 160 | 100-2203 | 2 | Nut-Flange |
| 170 | 99-3514 | 1 | Cover |
| 180 | 98-9636 | 1 | Gasket-Pump, Fuel |

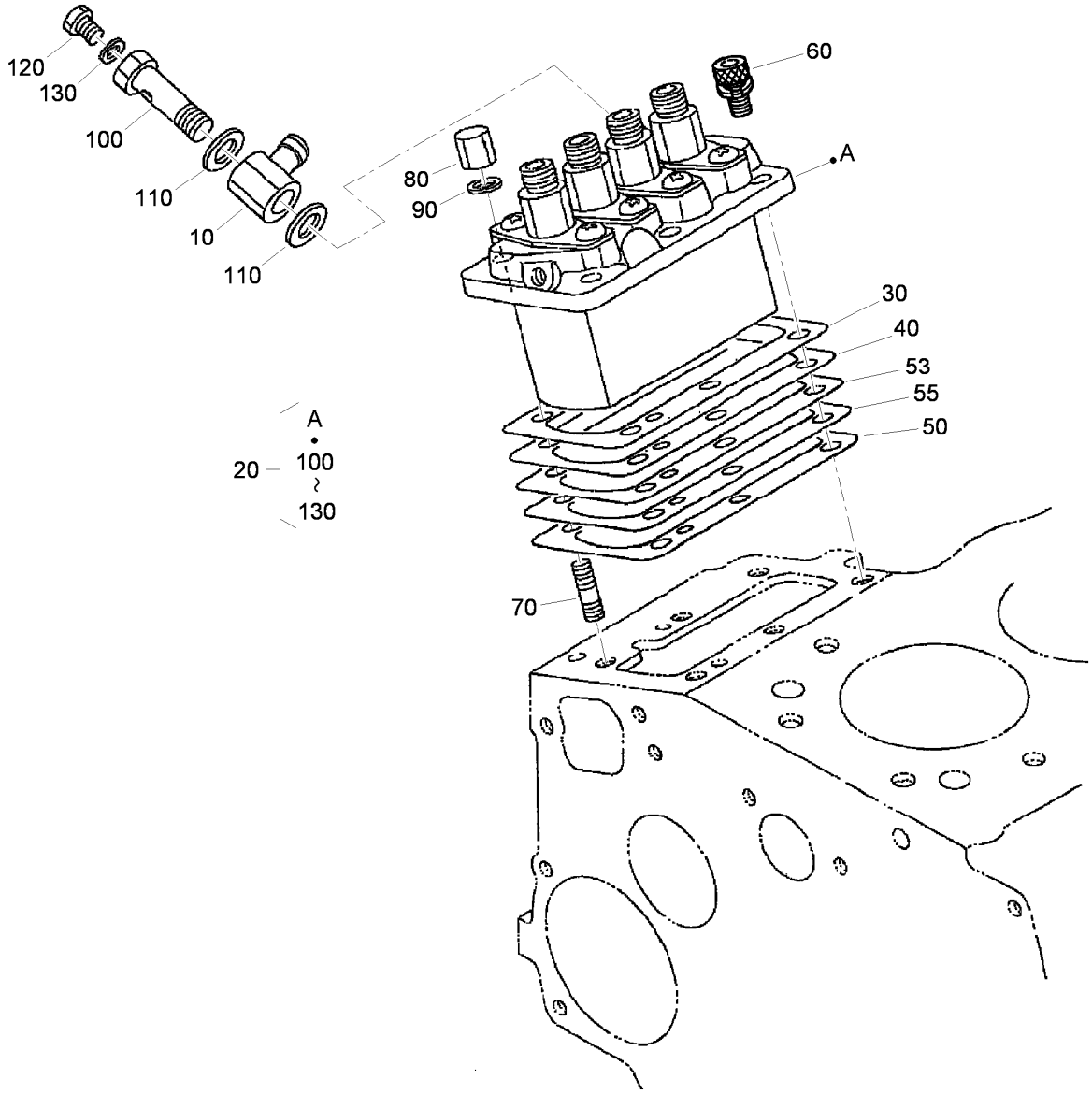


# Injection Pump Assembly

| Ref. | Part Number | Qty. | Description |
|---|---|---|---|
| 10 | 98-9596 | 1 | Joint-Eye |
| 20 | 105-3727 | 1 | Injection Pump ASM |
| 30 | 105-3728 | 1 | Shim-Pump, Injection (.20Mm) |
| 40 | 105-3729 | 1 | Shim-Pump, Injection (.25Mm) |
| 50 | 105-3730 | 1 | Shim-Pump, Injection (.30Mm) |
| 53 | 115-3016 | 1 | Shim-Pump, Injection (.350Mm) |
| 55 | 115-3017 | 1 | Shim-Pump, Injection (.175Mm) |
| 60 | 117-7564 | 3 | Bolt-Hex Soc HD |
| 70 | 98-9438 | 3 | Stud |
| 80 | 98-9440 | 3 | Nut-Cap |
| 90 | 98-7699 | 6 | Washer-Spring |
| 100 | 98-9464 | 1 | Bolt-Joint |
| 110 | 98-9445 | 2 | Gasket |
| 120 | 98-9430 | 1 | Screw |
| 130 | 98-9446 | 1 | Gasket |

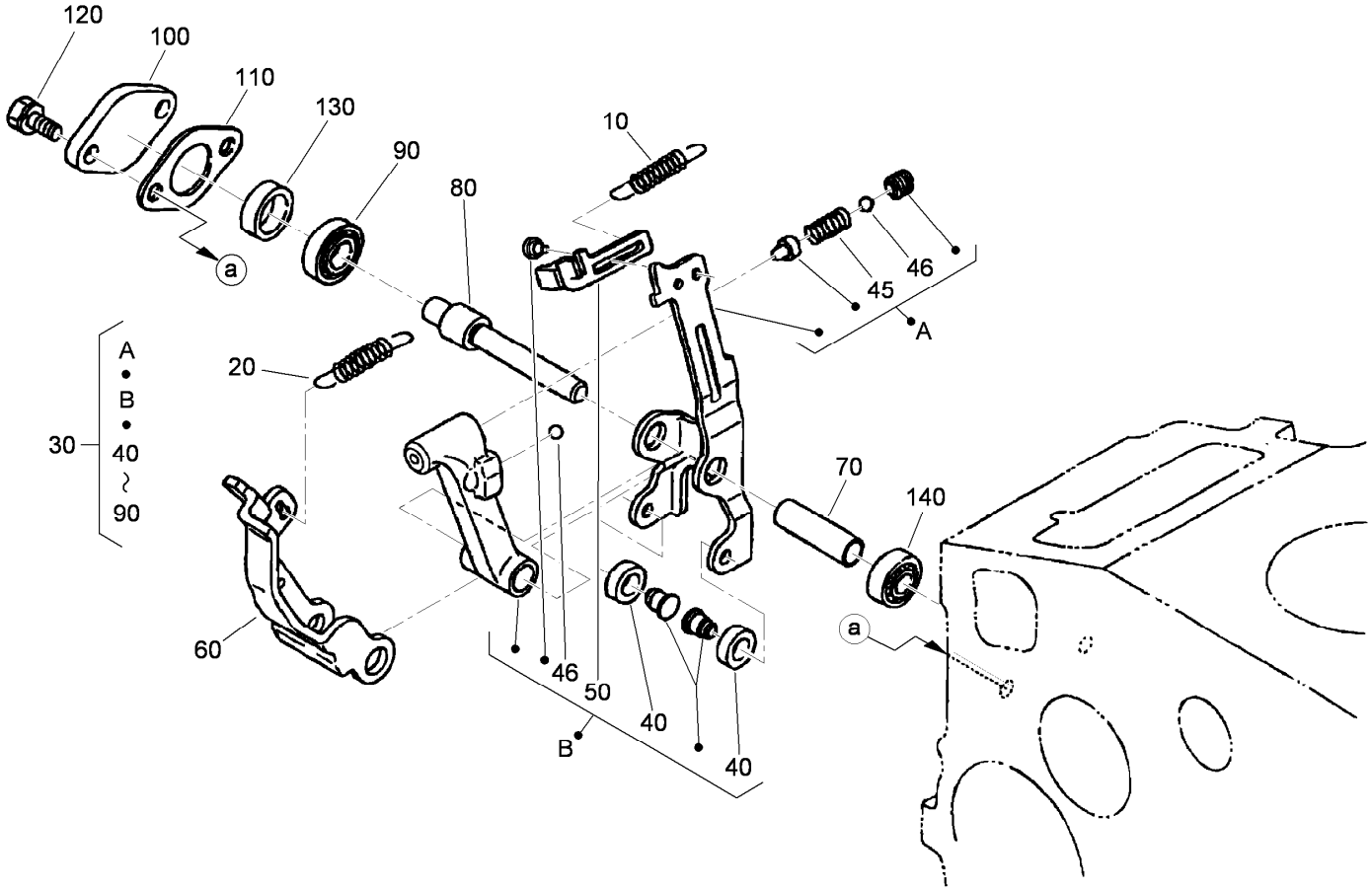


# Governor Assembly

| Ref. | Part Number | Qty. | Description |
|---|---|---|---|
| 10 | 105-3741 | 1 | Spring-Start |
| 20 | 98-9681 | 1 | Spring-Governor |
| 30 | 115-4502 | 1 | Fork Lever ASM |
| 40 | 98-9692 | 2 | Roller |
| 45 | 108-2867 | 1 | Spring |
| 46 | 98-7580 | 2 | Ball |
| 50 | 107-9083 | 1 | Lever-Thrust |
| 60 | 107-9084 | 1 | Lever-Fork |

| Ref. | Part Number | Qty. | Description |
|---|---|---|---|
| 70 | 107-9085 | 1 | Shaft-Lever, Fork |
| 80 | 107-9086 | 1 | Shaft-Lever, Fork |
| 90 | 98-9570 | 1 | Bearing-Miniaturize |
| 100 | 115-4122 | 1 | Cover-Shaft, Fork Lever |
| 110 | 98-9682 | 1 | Gasket |
| 120 | 98-9350 | 2 | Bolt |
| 130 | 98-9567 | 1 | Collar |
| 140 | 98-9571 | 1 | Bearing-Miniaturize |

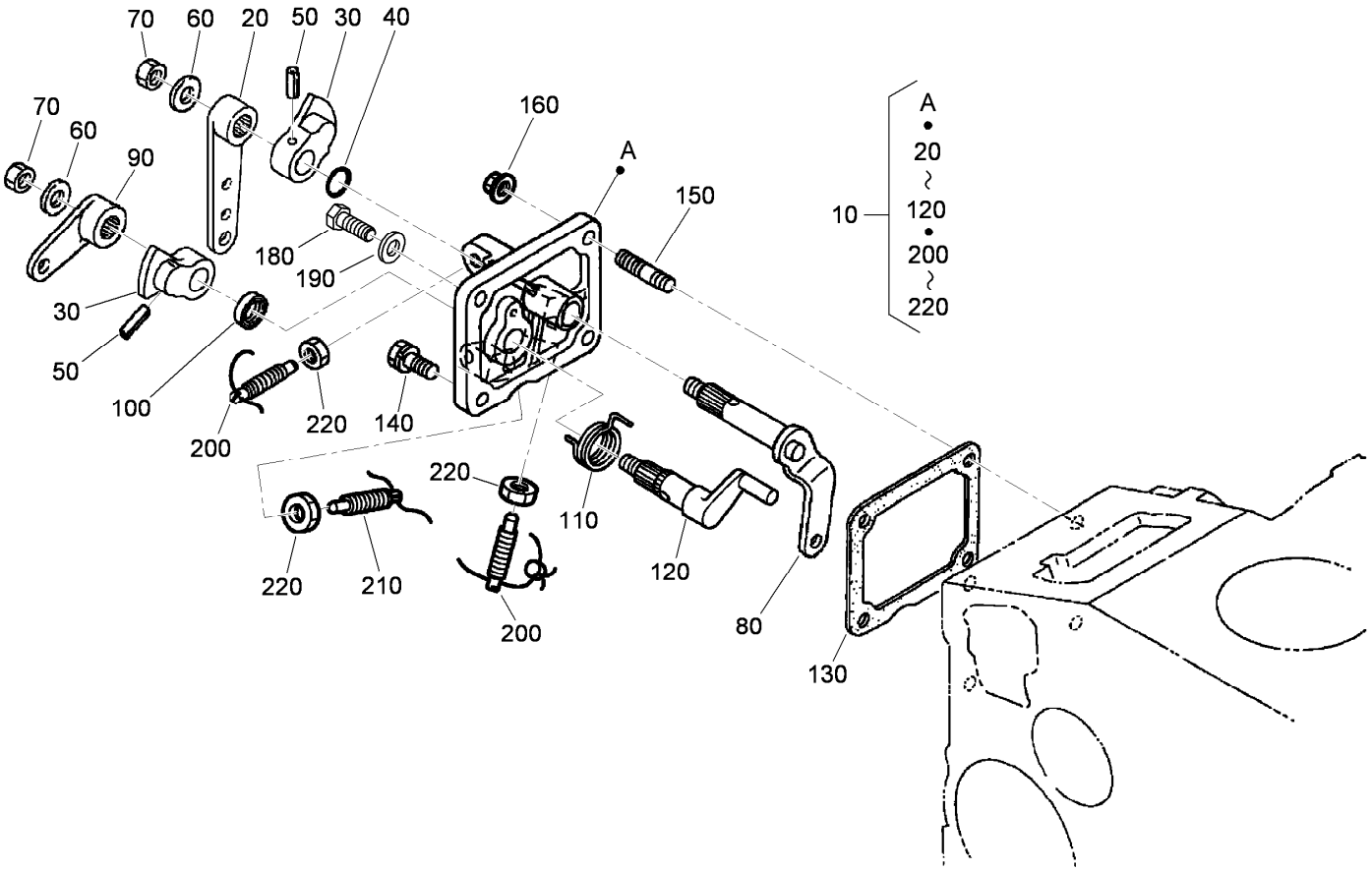


# Speed Control Plate Assembly

| Ref. | Part Number | Qty. | Description |
|---|---|---|---|
| 10 | 105-3735 | 1 | Control Plate ASM |
| 20 | 98-9662 | 1 | Lever-Control, Speed |
| 30 | 98-9572 | 2 | Lever-Control, Speed |
| 40 | 105-3788 | 1 | O-Ring |
| 50 | 98-7602 | 2 | Pin-Spring |
| 60 | 98-9594 | 2 | Washer-Plain |
| 70 | 98-9589 | 2 | Nut |
| 80 | 98-9658 | 1 | Governor Lever ASM |
| 90 | 98-9663 | 1 | Lever-Stop, Engine |
| 100 | 98-7601 | 1 | Seal-Oil |
| 110 | 98-9472 | 1 | Spring-Return |
| 120 | 98-9664 | 1 | Shaft-Lever, Stop |
| 130 | 98-9637 | 1 | Gasket |
| 140 | 98-7692 | 1 | Bolt |
| 150 | 105-3710 | 1 | Stud |
| 160 | 98-7572 | 2 | Nut |
| 180 | 99-8348 | 2 | Bolt |
| 190 | 98-7654 | 2 | Gasket |
| 200 | 117-7565 | 2 | Bolt-Adjusting |
| 210 | 117-7566 | 1 | Bolt-Adjusting |
| 220 | 98-7572 | 3 | Nut |

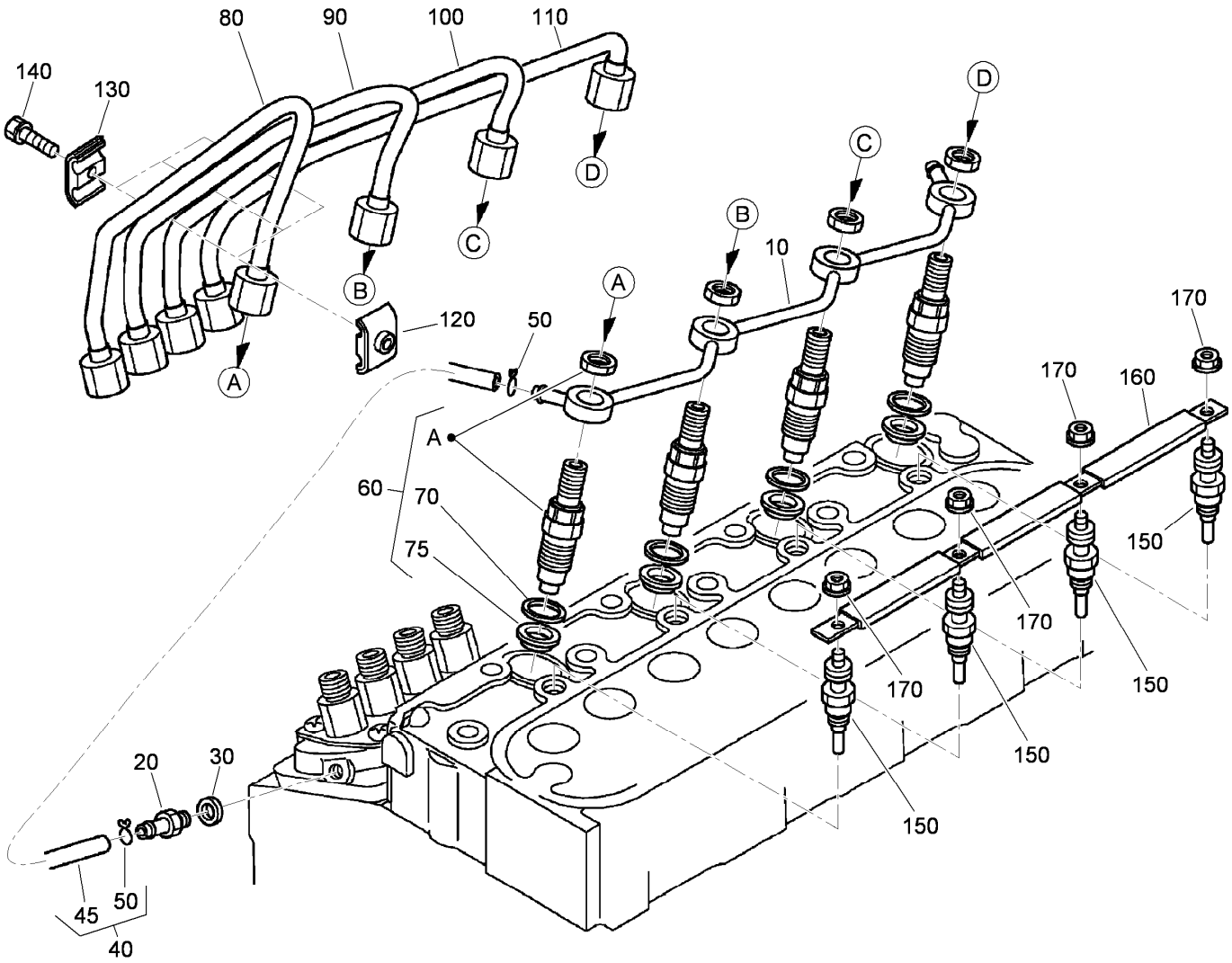


# Nozzle Holder and Glow Plug Assembly

| Ref. | Part Number | Qty. | Description |
|---|---|---|---|
| 10 | 105-3737 | 1 | Over Flow Pipe ASM |
| 20 | 98-9431 | 1 | Screw-Bleeder, Air |
| 30 | 98-7654 | 1 | Gasket |
| 40 | 98-9420 | 1 | Overflow Pipe ASM |
| 45 | 112-0182 | 1 | Pipe-Overflow |
| 50 | 98-7671 | 2 | Clip-Pipe |
| 60 | 115-3018 | 4 | Nozzle Holder Kit |
| 70 | 98-7676 | 4 | Gasket |
| 75 | 98-7677 | 4 | Seal-Heat |
| 80 | 98-9653 | 1 | Pipe-Injection |

| Ref. | Part Number | Qty. | Description |
|---|---|---|---|
| 90 | 98-9654 | 1 | Pipe-Injection |
| 100 | 98-9655 | 1 | Pipe-Injection |
| 110 | 105-3738 | 1 | Pipe-Injection |
| 120 | 98-7682 | 3 | Clamp-Pipe |
| 130 | 98-7683 | 3 | Clamp-Pipe |
| 140 | 98-7684 | 3 | Screw (W/Washer) |
| 150 | 115-3019 | 4 | Plug-Glow |
| 160 | 105-3739 | 1 | Cord-Plug, Glow |
| 170 | 99-8377 | 4 | Nut-Flange |

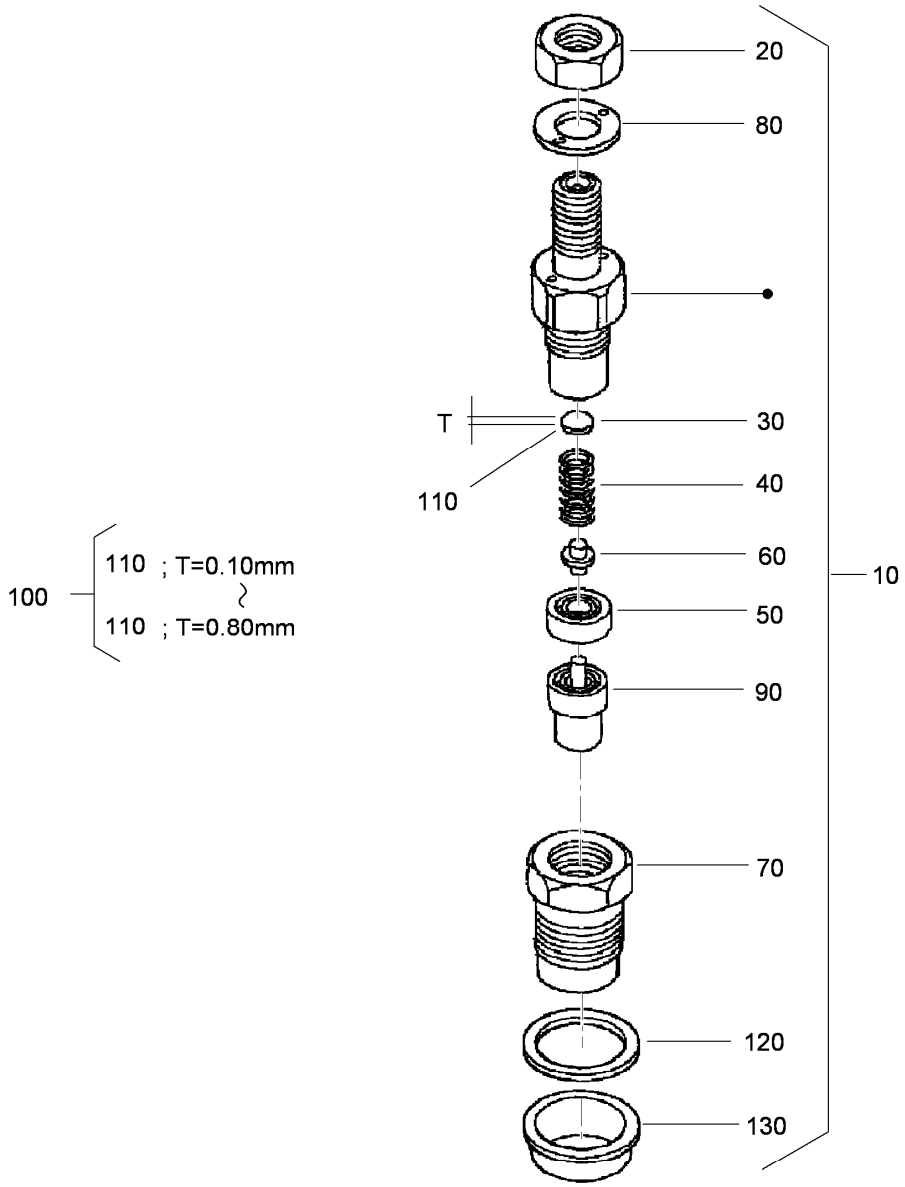


# Nozzle Holder Component Assembly

| Ref. | Part Number | Qty. | Description |
|---|---|---|---|
| 10 | 115-3018 | 4 | Nozzle Holder Kit |
| 20 | 99-8301 | 4 | Nut |
| 30 | 99-8302 | 4 | Washer-Adjusting |
| 40 | 99-8303 | 4 | Spring-Nozzle |
| 50 | 99-8304 | 4 | Spacer-Distance |
| 60 | 99-8305 | 4 | Rod-Push |
| 70 | 99-8306 | 4 | Nut-Nozzle |
| 80 | 99-8307 | 4 | Washer-Plain |
| 90 | 115-3020 | 4 | Piece-Nozzle |
| 100 | 99-8309 | 4 | Adjusting Washer ASM |
| 110 | 99-8310 | 4 | Washer-Adjust (0.10Mm) |

| Ref. | Part Number | Qty. | Description |
|---|---|---|---|
| 110 | 99-8311 | 4 | Washer-Adjust (0.20Mm) |
| 110 | 99-8312 | 4 | Washer-Adjust (0.30Mm) |
| 110 | 99-8313 | 4 | Washer-Adjust (0.40Mm) |
| 110 | 99-8314 | 4 | Washer-Adjust (0.50Mm) |
| 110 | 99-8315 | 4 | Washer-Adjust (0.52Mm) |
| 110 | 99-8316 | 4 | Washer-Adjust (0.54Mm) |
| 110 | 99-8317 | 4 | Washer-Adjust (0.56Mm) |
| 110 | 99-8318 | 4 | Washer-Adjust (0.58Mm) |
| 110 | 99-8319 | 4 | Washer-Adjust (0.80Mm) |
| 120 | 98-7676 | 4 | Gasket |
| 130 | 98-7677 | 4 | Seal-Heat |

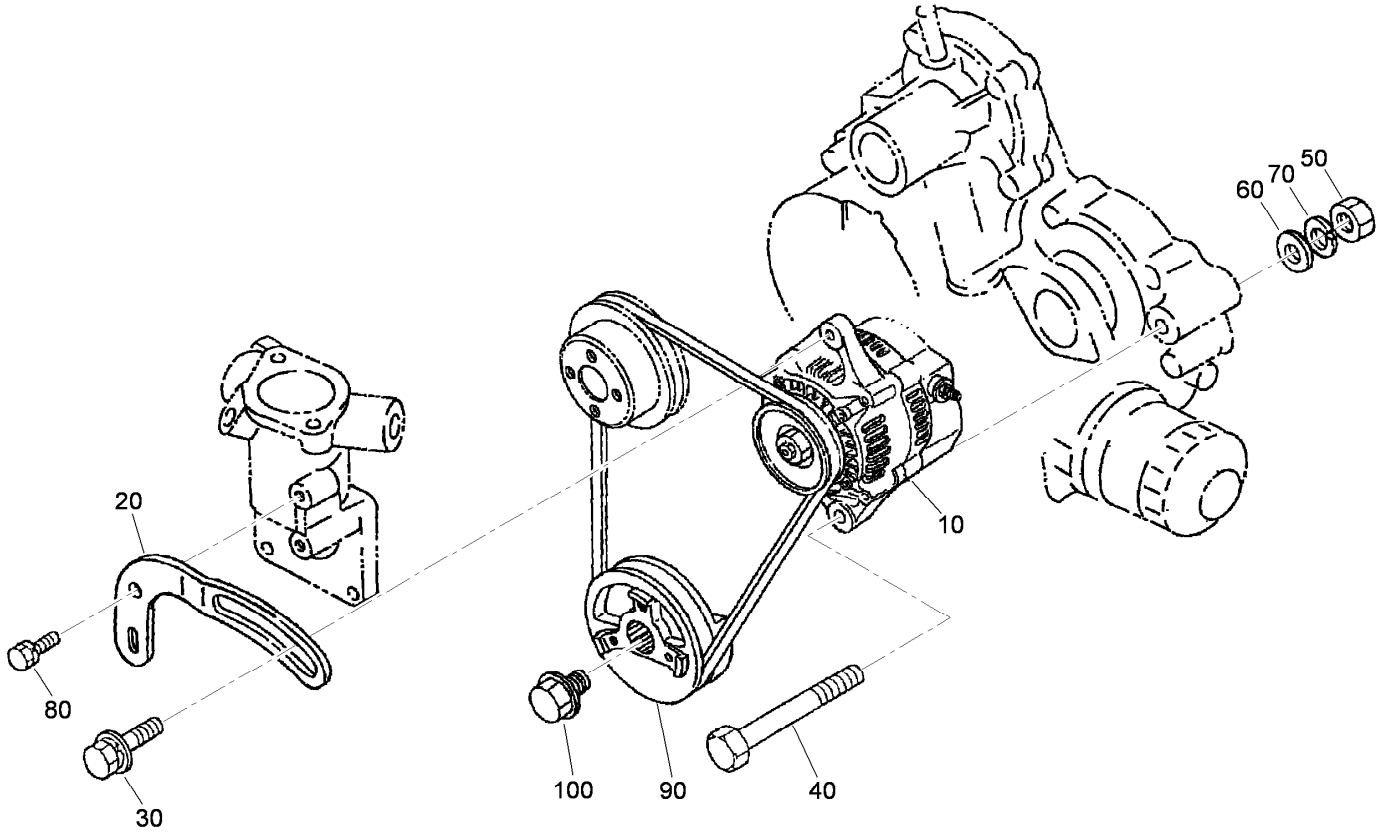


# Alternator and Pulley Assembly

| *Ref.* | *Part Number* | *Qty.* | *Description* |
|---|---|---|---|
| 10 | 117-5541 | 1 | Alternator ASM |
| 20 | 117-5542 | 1 | Bracket |
| 30 | 108-7088 | 1 | Bolt |
| 40 | 98-9360 | 1 | Bolt |
| 50 | 98-7737 | 1 | Nut |
| 60 | 98-7696 | 1 | Washer-Plain |
| 70 | 98-7738 | 1 | Washer-Spring |
| 80 | 98-7692 | 1 | Bolt |
| 90 | 105-3745 | 1 | Pulley-Drive, Fan |
| 100 | 98-9585 | 1 | Bolt |

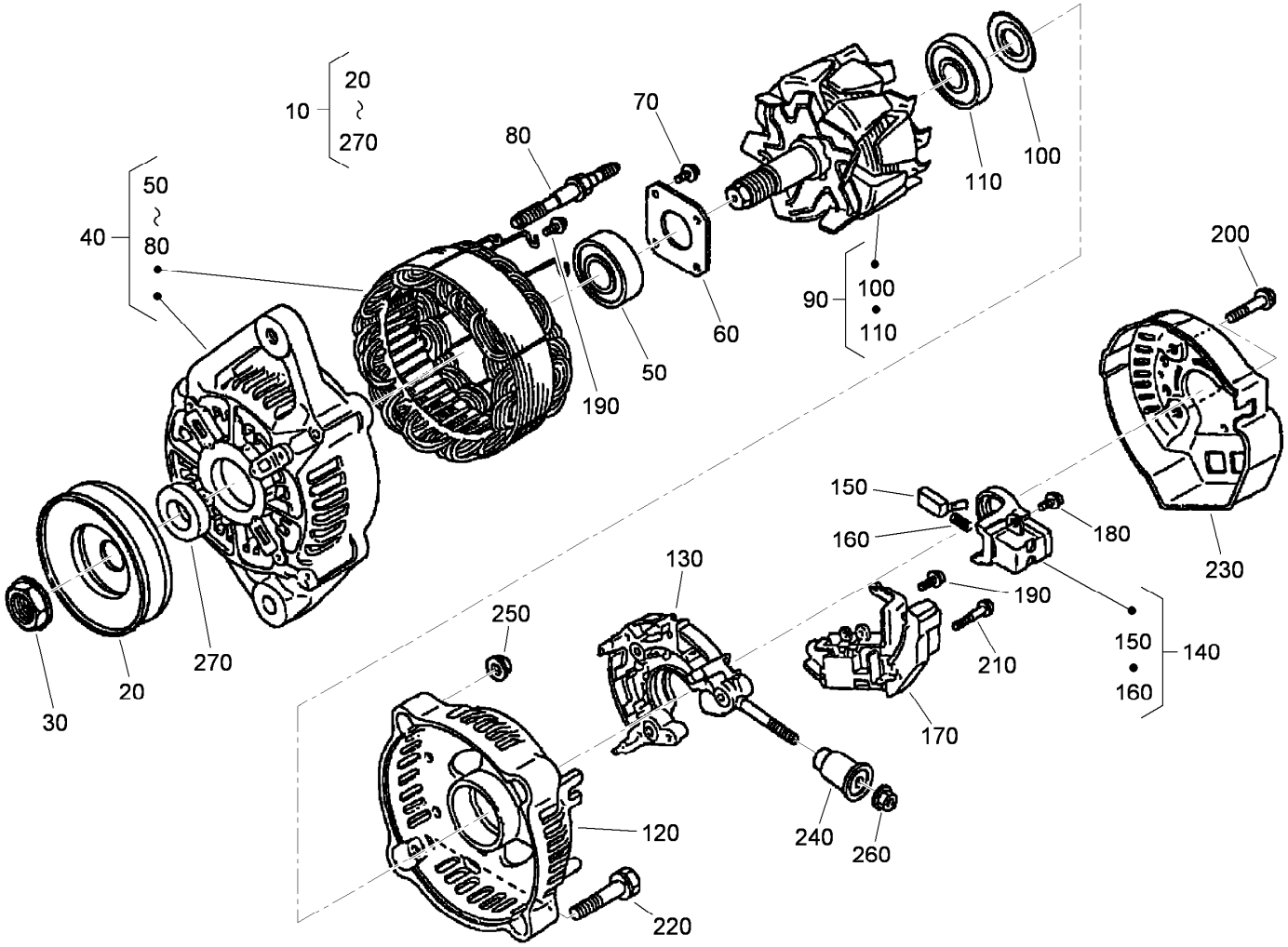


# Alternator Components

| Ref. | Part Number | Qty. | Description |
|---|---|---|---|
| 10 | 117-5541 | 1 | Alternator ASM |
| 20 | 98-9453 | 1 | Pulley-Dynamo |
| 30 | 98-7708 | 1 | Nut |
| 40 | 117-0316 | 1 | Drive End Frame ASM |
| 50 | 107-0137 | 1 | Bearing-Ball |
| 60 | 98-7715 | 1 | Plate-Retainer |
| 70 | 98-7716 | 4 | Screw-Head, Round |
| 80 | 98-7717 | 2 | Bolt-Through |
| 90 | 117-0317 | 1 | Rotor ASM |
| 100 | 98-7711 | 1 | Cover-Bearing |
| 110 | 107-0138 | 1 | Bearing-Ball |
| 120 | 117-0318 | 1 | Frame-End |
| 130 | 117-0322 | 1 | Holder |
| 140 | 107-0141 | 1 | Brush Holder ASM |

| Ref. | Part Number | Qty. | Description |
|---|---|---|---|
| 150 | 98-7724 | 2 | Brush |
| 160 | 98-7725 | 2 | Spring-Brush |
| 170 | 117-0319 | 1 | Regulator ASM |
| 180 | 98-7728 | 1 | Screw-Head, Round |
| 190 | 98-7727 | 6 | Screw-Head, Round |
| 200 | 98-7729 | 3 | Bolt |
| 210 | 98-7726 | 2 | Screw-Head, Round |
| 220 | 98-7731 | 2 | Bolt |
| 230 | 117-0320 | 1 | Cover-End |
| 240 | 117-0321 | 1 | Insulation-Brush |
| 250 | 98-7730 | 2 | Nut |
| 260 | 98-7732 | 1 | Nut |
| 270 | 98-7709 | 1 | Collar |

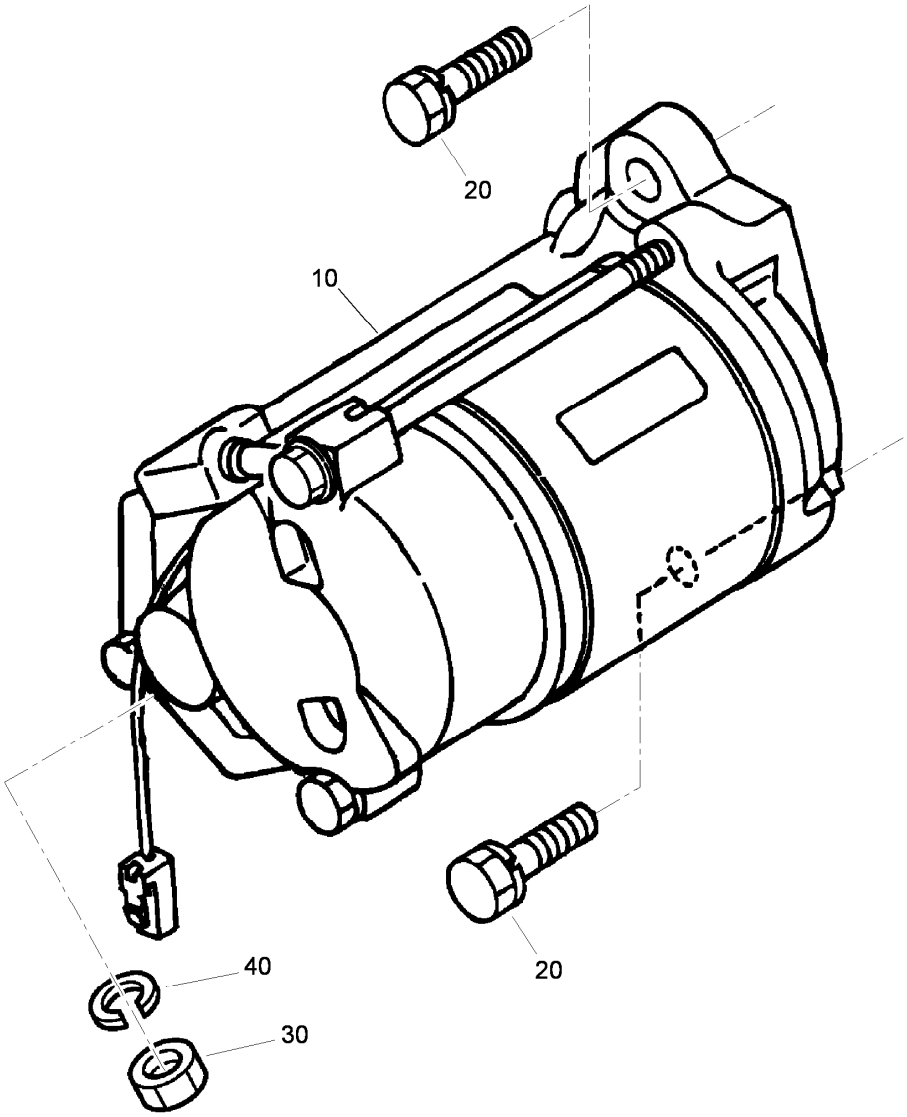


# Starter Assembly

| Ref. | Part Number | Qty. | Description |
|---|---|---|---|
| 10 | 98-9705 | 1 | Starter ASM |
| 20 | 98-7697 | 2 | Bolt |
| 30 | 98-7739 | 1 | Nut |
| 40 | 105-2893 | 1 | Washer-Spring |

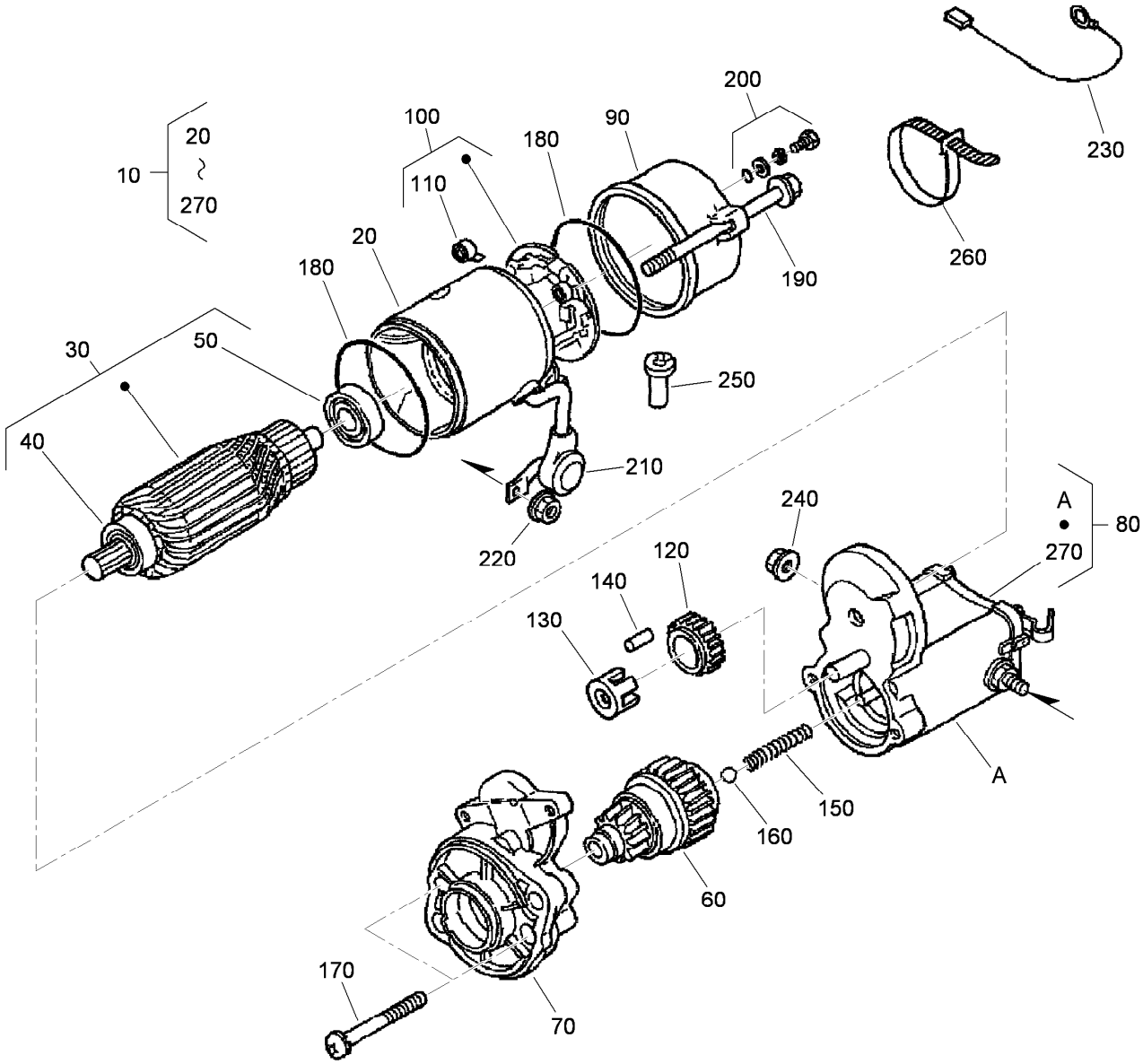


# Starter (Component Part) Assembly

| Ref. | Part Number | Qty. | Description |
|---|---|---|---|
| 10 | 98-9705 | 1 | Starter ASM |
| 20 | 104-8608 | 1 | Yoke ASM |
| 30 | 98-7742 | 1 | Armature ASM |
| 40 | 98-7744 | 1 | Bearing |
| 50 | 98-7743 | 1 | Bearing |
| 60 | 99-8373 | 1 | Clutch-Running, Over |
| 70 | 99-8374 | 1 | Frame-End, Drive |
| 80 | 105-3746 | 1 | Magnetic Switch ASM |
| 90 | 98-7748 | 1 | Frame-End |
| 100 | 98-7749 | 1 | Brush Holder ASM |
| 110 | 98-7750 | 4 | Spring-Brush |
| 120 | 98-7751 | 1 | Gear |
| 130 | 98-7752 | 1 | Retainer |
| 140 | 98-7753 | 5 | Roller |

| Ref. | Part Number | Qty. | Description |
|---|---|---|---|
| 150 | 98-7754 | 1 | Spring |
| 160 | 98-7755 | 1 | Ball |
| 170 | 98-7756 | 2 | Bolt |
| 180 | 98-7757 | 2 | O-Ring |
| 190 | 100-9240 | 2 | Bolt |
| 200 | 98-7758 | 2 | Bolt ASM |
| 210 | 99-8375 | 1 | Cover |
| 220 | 99-8371 | 1 | Nut-Hex |
| 230 | 98-9711 | 1 | Cord-Solenoid, Stop |
| 240 | 99-8376 | 1 | Nut-Hex |
| 250 | 98-7759 | 1 | Pipe-Drain |
| 260 | 98-9712 | 1 | Band-Cover |
| 270 | 105-2886 | 1 | Cover ASM |

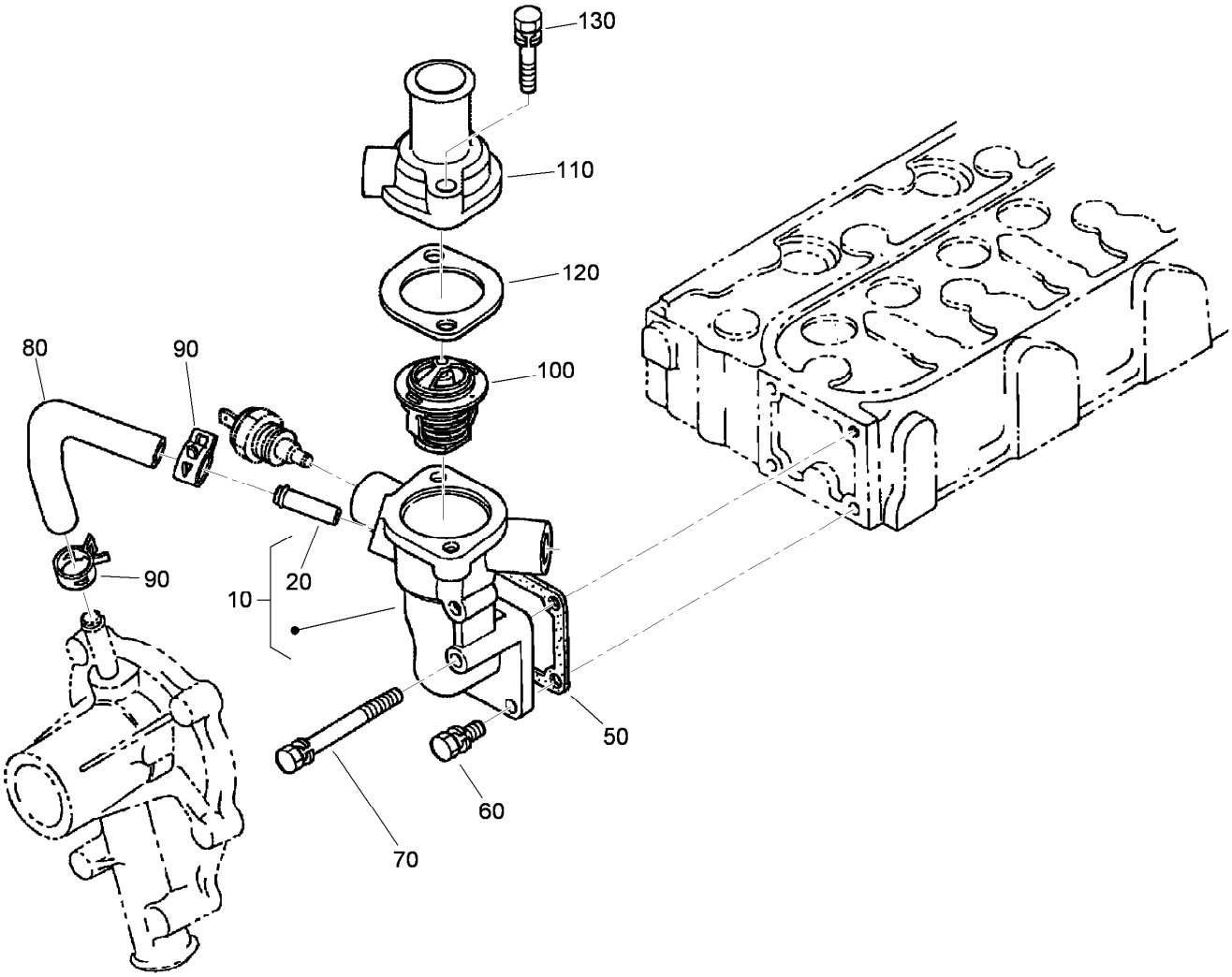


# Water Flange Assembly

| Ref. | Part Number | Qty. | Description |
|---|---|---|---|
| 10 | 98-9713 | 1 | Water Flange ASM |
| 20 | 98-9580 | 1 | Pipe-Return, Water |
| 50 | 98-9638 | 1 | Gasket-Flange, Water |
| 60 | 98-7692 | 3 | Bolt |
| 70 | 98-9356 | 1 | Bolt |
| 80 | 98-9578 | 1 | Pipe-Return, Water |
| 90 | 98-9579 | 2 | Band-Pipe |
| 100 | 98-7778 | 1 | Thermostat ASM |
| 110 | 98-9471 | 1 | Cover-Thermostat |
| 120 | 105-3748 | 1 | Gasket-Thermostat |
| 130 | 98-7777 | 2 | Bolt |

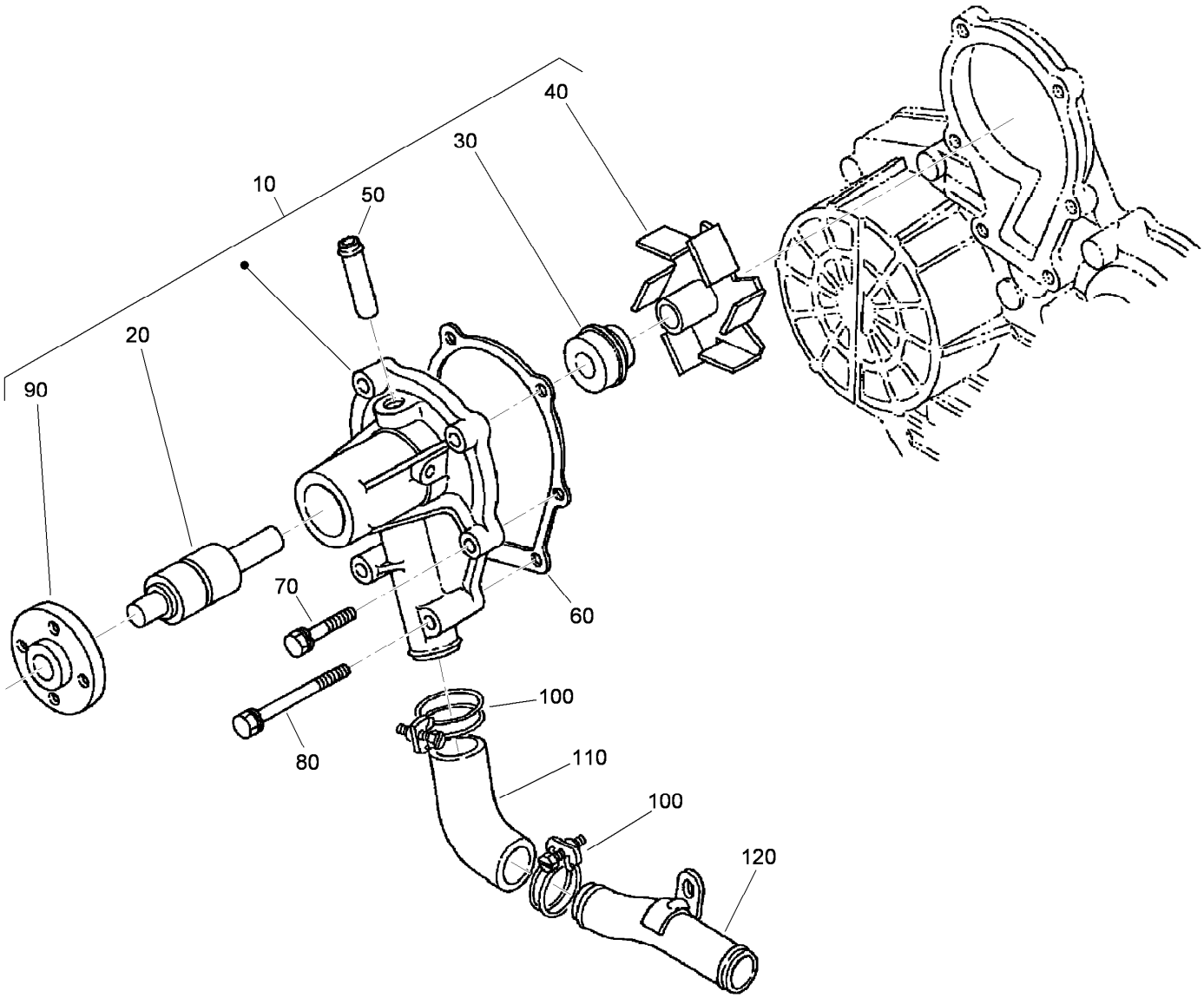


# Water Pump Assembly

| Ref. | Part Number | Qty. | Description |
|---|---|---|---|
| 10 | 107-9089 | 1 | Water Pump ASM |
| 20 | 99-3517 | 1 | Bearing-Pump, Water |
| 30 | 105-3750 | 1 | Mechanical Seal ASM |
| 40 | 112-7017 | 1 | Impeller-Pump, Water |
| 50 | 100-1932 | 1 | Pipe-Return, Water |
| 60 | 99-3454 | 1 | Gasket-Pump, Water |
| 70 | 98-9353 | 4 | Bolt |
| 80 | 107-9090 | 2 | Bolt |
| 90 | 99-3516 | 1 | Flange-Pump, Water |
| 100 | 98-9717 | 2 | Clamp |
| 110 | 107-9091 | 1 | Pipe-Water |
| 120 | 98-9716 | 1 | Pipe-Water |

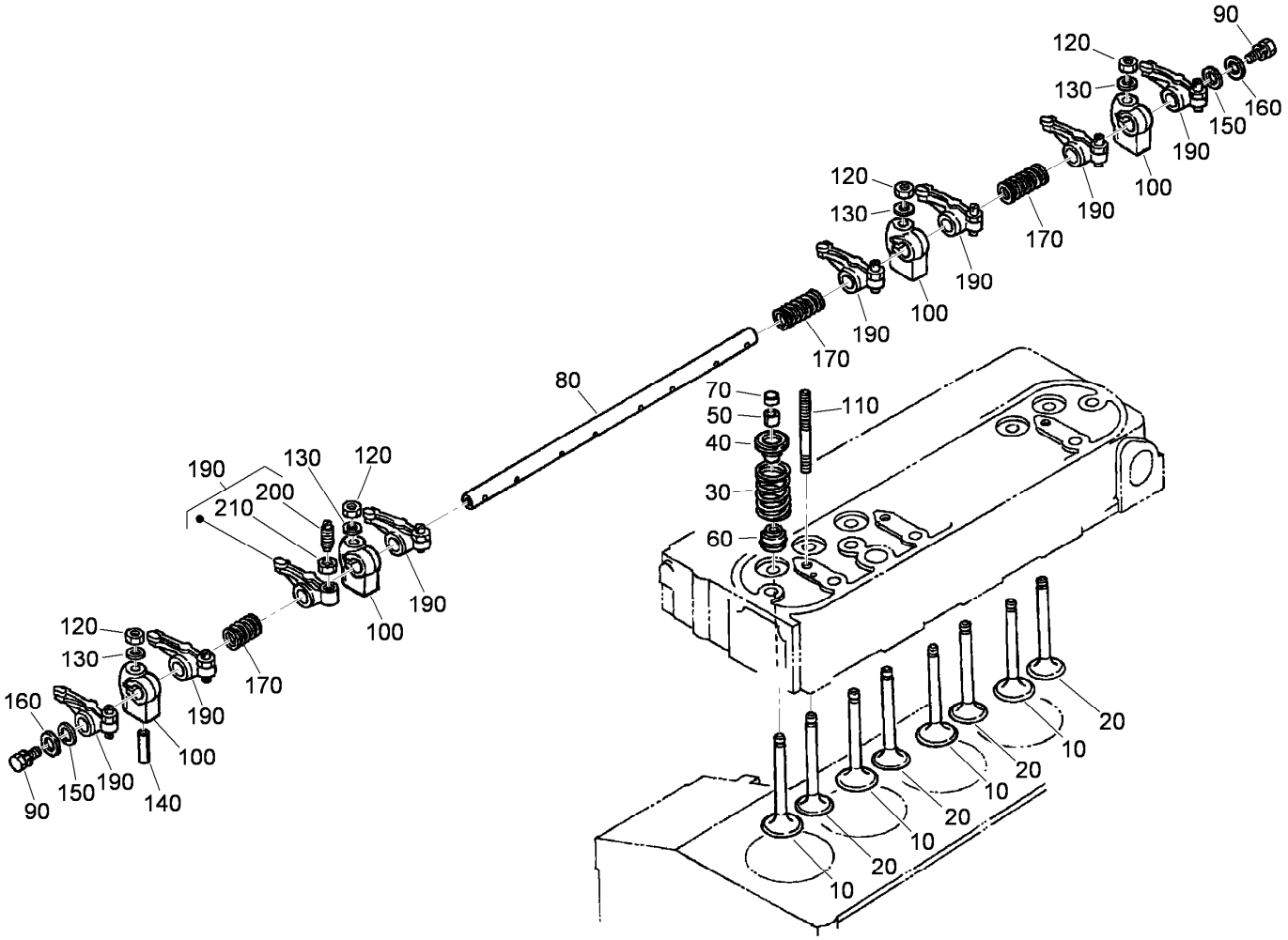


# Valve and Rocker Arm Assembly

| Ref. | Part Number | Qty. | Description |
|---|---|---|---|
| 10 | 120-2563 | 4 | Valve-Inlet |
| 20 | 120-2564 | 4 | Valve-Exhaust |
| 30 | 98-9648 | 8 | Spring-Valve |
| 40 | 107-9092 | 8 | Retainer-Spring |
| 50 | 117-7572 | 8 | Collet-Spring, Valve |
| 60 | 99-8385 | 8 | Seal-Stem, Valve |
| 70 | 98-9497 | 8 | Cap-Valve |
| 80 | 105-3790 | 1 | R-Arm Shaft ASM |
| 90 | 100-9265 | 2 | Bolt |
| 100 | 98-9505 | 4 | Bracket-Arm, Rocker |

| Ref. | Part Number | Qty. | Description |
|---|---|---|---|
| 110 | 98-9506 | 4 | Stud |
| 120 | 98-9393 | 4 | Nut |
| 130 | 98-9385 | 4 | Washer-Flat |
| 140 | 105-3758 | 1 | Pin-Spring |
| 150 | 98-9507 | 2 | Washer-Shaft, R-Arm |
| 160 | 110-3832 | 2 | Washer-Plain |
| 170 | 98-9504 | 2 | Spring-Arm, Rocker |
| 190 | 112-7020 | 8 | Rocker Arm ASM |
| 200 | 98-9502 | 8 | Screw-Adjusting |
| 210 | 98-9503 | 8 | Nut |

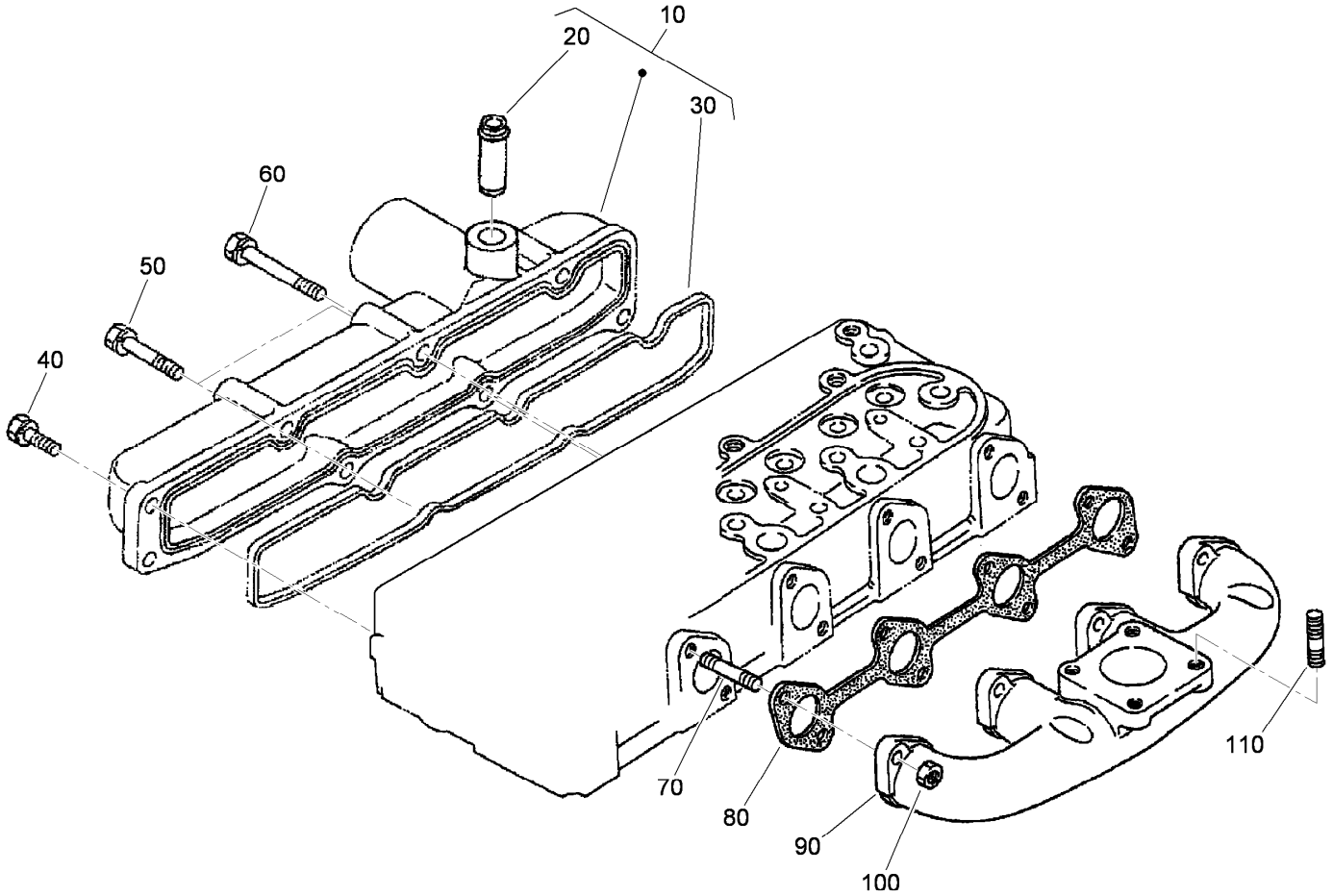


# Intake and Exhaust Manifold Assembly

| *Ref.* | *Part Number* | *Qty.* | *Description* |
|---|---|---|---|
| 10 | 108-2874 | 1 | Intake Manifold ASM |
| 20 | 98-9492 | 1 | Joint-Pipe, Breather |
| 30 | 105-3760 | 1 | Gasket-Manifold, Inlet |
| 40 | 98-7605 | 3 | Bolt |
| 50 | 98-9353 | 2 | Bolt |
| 60 | 105-3797 | 3 | Bolt |
| 70 | 98-9588 | 8 | Stud |
| 80 | 105-3765 | 1 | Gasket-Ex-Manifold |
| 90 | 112-0187 | 1 | Manifold-Exhaust |
| 100 | 98-9665 | 8 | Nut |
| 110 | 98-7769 | 4 | Stud |

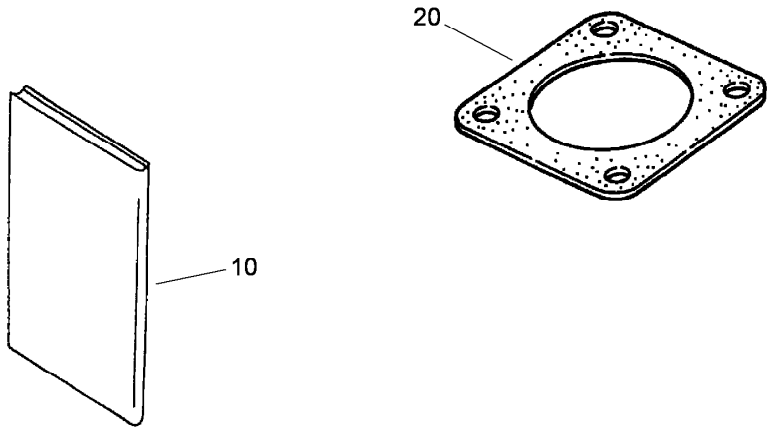


# Muffler Gasket and Operator Manual

| *Ref.* | *Part Number* | *Qty.* | *Description* |
|---|---|---|---|
| 10 | 117-8836 | 1 | Manual-Operator, Kubota |
| 20 | 99-8343 | 1 | Gasket-Muffler |

# Attachments and Accessories

## For 30537 Groundsmaster 360 4-Wheel Drive Multi-Purpose Machine

| Product Name | Model/Part |
|---|---|
| Blade-Belt Kit, 72in Side Discharge Only | 105-7272 |
| Green Diesel Cap | 107-2172 |
| Premium Transmission/Hydraulic Tractor Fluid (55 Gallon Drum) | 108-1183 |
| Premium Transmission/Hydraulic Tractor Fluid (5 Gallon Pail) | 108-1184 |
| Leaf Mulching Kit | 108-5273 |
| Blade-Rotary, Medium Flow (24.5in) | 110-0621-03 |
| Blade-Rotary, High Flow (24.5in) | 110-0622-03 |
| Blade-Rotary, Atomic (24.5in) | 110-0624-03 |
| 5in Air Cleaner Safety Element | 114-4057 |
| Slow Moving Vehicle Sign Kit | 115-0014 |
| Electrical Accessory Kit | 115-0019 |
| Hourmeter, Wireless Hourmeter System | 115-4754 |
| Spark Arrestor | 117-3281 |
| Atomic Blade Kit (3 Blade Pack) | 119-8020 |
| High Flow Blade Kit (3 Blade Pack) | 119-8021 |
| Beacon Kit | 120-0256 |
| Vinyl Backrest Extension Kit | 120-0583 |
| Auxiliary Power Unit | 120-6675 |
| Registration Plate Kit | 120-6678 |
| Weight Transfer Kit | 120-6683 |
| Premium Engine Oil 15w40 (55 Gallon Drum) | 121-6394 |
| Premium Engine Oil 15w40 (5 Gallon Pail) | 121-6395 |
| 400-hour Filter Maintenance Kit | 30052 |
| Hardtop Sunshade | 30359 |
| V-Plow Mounting Kit | 30378 |
| Quick Attach Front Frame | 30509 |
| Grammer Seat with Air Ride Suspension | 30511 |
| Road Homologation Light Kit, Non-Cab Unit (Europe) | 30512 |
| Road Light Kit, Non Cab Unit (North America) | 30513 |
| Speed Reduction Kit | 30547 |
| Jack Stand Kit | 30579 |
| 48in V-Plow | 30750 |
| GM360 Winter Enclosure | 31220 |
| Diagnostic Display Box | 85-4750 |
| Locking Latch | 98-9315 |

**Notes:**

**Notes:**

**Notes:**

TORO®

Count on it.