Form No. 3373-685 Rev A

CCR™ 6053 R/ES Quick Clear Snowthrower

Model No. 38567—Serial No. 313000001 and Up
Model No. 38569—Serial No. 313000001 and Up

Operator's Manual

Introduction

This machine is intended to be used by residential homeowners or professional, hired operators. It is designed primarily for removing snow from paved surfaces, such as driveways and sidewalks, and other surfaces for traffic on residential or commercial properties. It is not designed for removing materials other than snow, nor is it designed for clearing off gravel surfaces.

Read this information carefully to learn how to operate and maintain your machine properly and to avoid injury and machine damage. You are responsible for operating the machine properly and safely.

You may contact Toro directly at www.Toro.com for machine and accessory information, help finding a dealer, or to register your machine.

Whenever you need service, genuine Toro parts, or additional information, contact an Authorized Service Dealer or Toro Customer Service and have the model and serial numbers of your machine ready. Figure 1 identifies the location of the model and serial numbers on the machine. Write the numbers in the space provided.

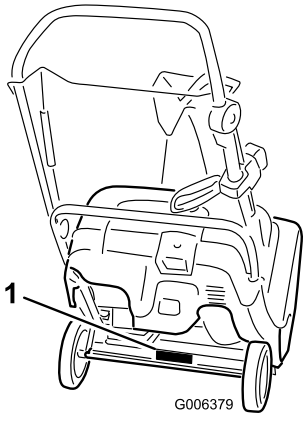

Figure 1

1. Model and serial number location

Model No. _____

Serial No. _____

This manual identifies potential hazards and has safety messages identified by the safety alert symbol (Figure 2), which signals a hazard that may cause serious injury or death if you do not follow the recommended precautions.



Figure 2

1. Safety alert symbol

This manual uses 2 words to highlight information. **Important** calls attention to special mechanical information and **Note** emphasizes general information worthy of special attention.

Safety

Read and understand the contents of this manual before you start the engine.

⚠This is the safety alert symbol. It is used to alert you to potential personal injury hazards. Obey all safety messages that follow this symbol to avoid possible injury or death.

Improperly using or maintaining this machine could result in injury or death. To reduce this potential, comply with the following safety instructions.

Training

- Read, understand, and follow all instructions on the machine and in the manual(s) before operating this machine. Be thoroughly familiar with the controls and the proper use of the machine. Know how to stop the machine and disengage the controls quickly.

© 2012—The Toro® Company
8111 Lyndale Avenue South
Bloomington, MN 55420

Register at www.Toro.com.

Original Instructions (EN)
Printed in the USA
All Rights Reserved

- Never allow children to operate the machine. Never allow adults to operate the machine without proper instruction.
- Keep the area of operation clear of all persons, particularly small children.
- Exercise caution to avoid slipping or falling.

Preparation

- Thoroughly inspect the area where the machine is to be used and remove all doormats, sleds, boards, wires, and other foreign objects.
- Do not operate the machine without wearing adequate winter garments. Avoid loose fitting clothing that can get caught in moving parts. Wear footwear that will improve footing on slippery surfaces.
- Handle fuel with care; it is highly flammable.
  - Use an approved fuel container.
  - Never add fuel to a running engine or hot engine.
  - Fill fuel tank outdoors with extreme care. Never fill the fuel tank indoors.
  - Never fill containers inside a vehicle or on a truck or trailer bed with a plastic liner. Always place containers on the ground, away from your vehicle, before filling.
  - When practical, remove gas-powered machinery from the truck or trailer and refuel it on the ground. If this is not possible, then refuel such machinery on a trailer with a portable container, rather than from a gasoline dispenser nozzle.
  - Keep the nozzle in contact with the rim of the fuel tank or container opening at all times, until refueling is complete. Do not use a nozzle lock-open device.
  - Replace gasoline cap securely and wipe up spilled fuel.
  - If fuel is spilled on clothing, change clothing immediately.
  - Do not smoke while handling gasoline.
- Use extension cords and receptacles as specified by the manufacturer for all machines with electric starting motors.
- Do not attempt to clear snow from a gravel or crushed rock surface. This machine is intended for use only on paved surfaces.
- Never attempt to make any adjustments while the engine is running (except when specifically recommended by manufacturer).
- Always wear safety glasses or eye shields during operation or while performing an adjustment or repair to protect eyes from foreign objects that may be thrown from the machine.
- Let the engine and machine adjust to outdoor temperatures before starting to clear the snow.

Operation

- Do not put hands or feet near or under rotating parts. Keep clear of the discharge opening at all times.
- Exercise extreme caution when operating on or crossing gravel drives, walks, or roads. Stay alert for hidden hazards or traffic.
- After striking a foreign object, stop the engine, remove the ignition key, thoroughly inspect the machine for any damage, and repair the damage before restarting and operating the machine.
- If the machine should start to vibrate abnormally, stop the engine and check immediately for the cause. Vibration is generally a warning of trouble.
- Stop the engine whenever you leave the operating position, before unclogging the rotor blade housing or discharge chute, and when making any repairs, adjustments or inspections.
- When cleaning, repairing, or inspecting the machine, stop the engine and make certain that the rotor blades and all moving parts have stopped.
- Do not run the engine indoors, except when starting the engine and for transporting the machine in or out of the building. Open the outside doors; exhaust fumes are dangerous.
- Exercise extreme caution when operating on slopes.
- Never operate the machine without proper guards and other safety protective devices in place and working.
- Never direct the discharge toward people or areas where property damage can occur. Keep children and others away.
- Do not overload the machine capacity by attempting to clear snow at too fast a rate.
- Look behind and use care when backing up with the machine.
- Disengage power to the rotor blades when the machine is being transported or not in use.
- Never operate the machine without good visibility or light. Always be sure of your footing, and keep a firm hold on the handles. Walk; never run.
- Never touch a hot engine or muffler (Figure 3).

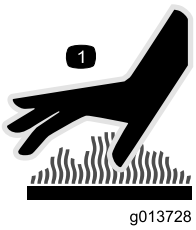

Figure 3

Clearing a Clogged Discharge Chute

Hand contact with the rotating rotor blades inside the discharge chute is the most common cause of injury associated with snow throwers. Never use your hand to clean out the discharge chute.

To clear the chute:

- **Shut the engine off!**
- Wait 10 seconds to be sure the rotor blades have stopped rotating.
- Always use a clean-out tool, not your hands.

Maintenance and Storage

- Check all fasteners at frequent intervals for proper tightness to be sure the machine is in safe working condition.
- Never store the machine with fuel in the fuel tank inside a building where ignition sources are present, such as hot water heaters, space heaters, or clothes dryers. Allow the engine to cool before storing in any enclosure.
- Always refer to the *Operator's Manual* for important details if the machine is to be stored for an extended period of time.
- Maintain or replace safety and instruction labels, as necessary.
- Run the machine a few minutes after throwing snow to prevent freeze-up of the rotor blades.

Toro Snowthrower Safety

The following list contains safety information specific to Toro products or other safety information that you must know.

- **Rotating rotor blades can injure fingers or hands.** Stay behind the handles and away from the discharge opening while operating the machine. **Keep your face, hands, feet, and any other part of your body or clothing away from moving or rotating parts.**
- Before adjusting, cleaning, repairing, and inspecting the machine, and before unclogging the discharge chute, **stop the engine, remove the key, and wait for all moving parts to stop.**
- **Before** leaving the operating position, stop the engine, remove the ignition key, and wait for all moving parts to stop.
- If a shield, safety device, or decal is damaged, illegible, or lost, repair or replace it before beginning operation. Also, tighten any loose fasteners.
- **Do not** smoke while handling gasoline.
- **Do not** use the machine on a roof.
- Do not touch the engine while it is running or soon after it has stopped because the engine may be hot enough to cause a burn.
- Perform only those maintenance instructions described in this manual. Before performing any maintenance, service, or adjustment, stop the engine and remove the key. If major repairs are ever needed, contact an Authorized Service Dealer.
- Do not change the governor settings on the engine.
- When storing the machine for more than 30 days, drain the fuel from the fuel tank to prevent a potential hazard. Store fuel in an approved fuel container. Remove the key from the ignition switch before storing the machine.
- Purchase only genuine Toro replacement parts and accessories.

Sound Pressure

This machine has a sound pressure level at the operator's ear of 88 dBA, which includes an Uncertainty Value (K) of 1 dBA. The sound pressure level was determined according to the procedures outlined in EN ISO 11201.

Sound Power

This machine has a guaranteed sound power level of 104 dBA, which includes an Uncertainty Value (K) of 3.75 dBA. The sound power level was determined according to the procedures outlined in EN ISO 3744.

Hand-Arm Vibration

Measured vibration level for the left hand = 8.4 m/s^2

Measured vibration level for the right hand = 10.7 m/s^2

Uncertainty Value (K) = 4.3 m/s^2

The measured values were determined according to the procedures outlined in EN ISO 20643.

Safety and Instructional Decals

Important: Safety and instruction decals are located near areas of potential danger. Replace damaged decals.

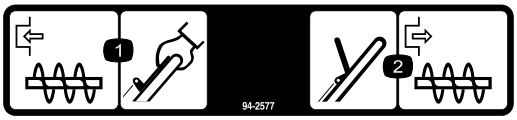

94-2577

1. To engage the rotor blades, hold the control bar against the handle.
2. To disengage the rotor blades, release the control bar.

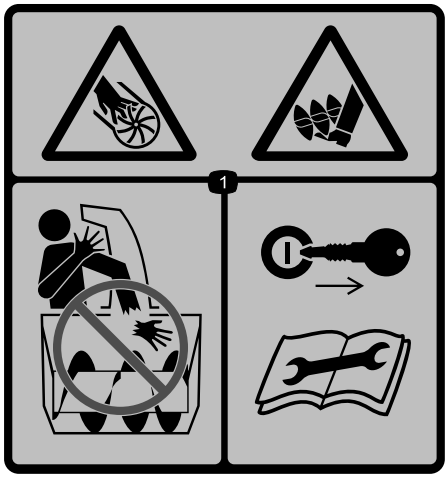

115–5698

Order part no. 117-9121

1. Cutting dismemberment hazards, impeller and auger—do not place your hand in the chute; remove the ignition key and read the instructions before servicing or performing maintenance.

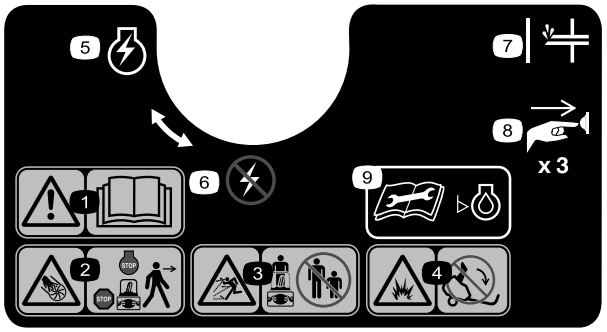

117-9102

Order part no. 117-6036

1. Warning—read the *Operator's Manual.*
2. Cutting/dismemberment hazard, impeller—stop the engine before leaving the machine.
3. Thrown object hazard—keep bystanders a safe distance from the machine.
4. Fuel spill hazard—do not tip machine backward.
5. Engine switch On
6. Engine switch Off
7. Primer
8. Push the primer three times to prime the engine.
9. Read the *Operator's Manual* before checking engine oil level.

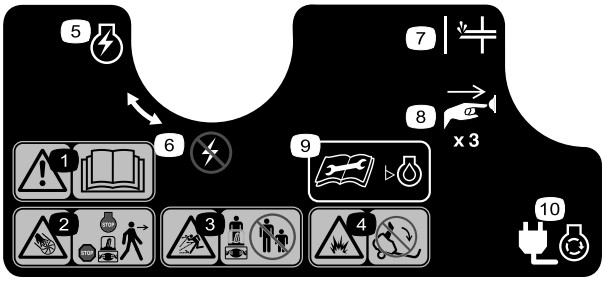

117-9103

Order part no. 117-6046

1. Warning—read the *Operator's Manual.*
2. Cutting/dismemberment hazard, impeller—stop the engine before leaving the machine.
3. Thrown object hazard—keep bystanders a safe distance from the machine.
4. Fuel spill hazard—do not tip machine backward.
5. Engine switch On
6. Engine switch Off
7. Primer
8. Push the primer three times to prime the engine.
9. Read the *Operator's Manual* before checking engine oil level.
10. Plug the machine in to power the electric starter.

Setup

Loose Parts

Use the chart below to verify that all parts have been shipped.

Procedure	Description	Qty.	Use
1	No parts required	–	Unfold the handle.
2	Screws Chute assembly	3 1	Install the discharge chute.

1

Unfolding the Handle

No Parts Required

Procedure

1. Loosen the handle knobs, pull out the "U"-shaped handle locks until you can move the handle freely, and rotate the handle to the operating position (Figure 4).

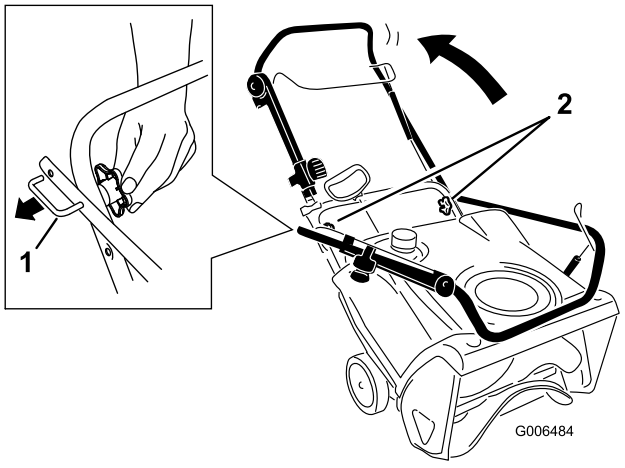

Figure 4

1. "U"-shaped handle lock (2) 2. Handle knobs

2. Insert the end of the "U"-shaped handle lock into the open hole in the handle and tighten the handle knobs until they are snug (Figure 5).

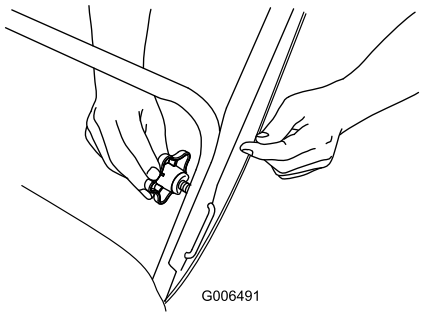

Figure 5

Important: Ensure that you do not pinch or kink the control cable or the Quick Shoot™ cables (Figure 6).

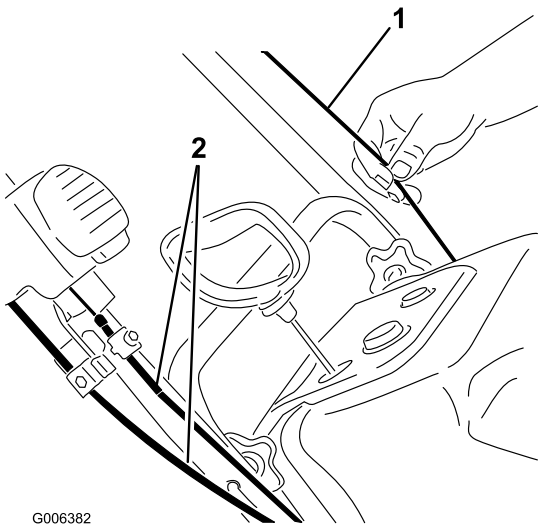

Figure 6

1. Control cable 2. Quick Shoot™ cables

2

Installing the Discharge Chute

Parts needed for this procedure:

3	Screws
1	Chute assembly

Procedure

Install the discharge chute as shown (Figure 7).

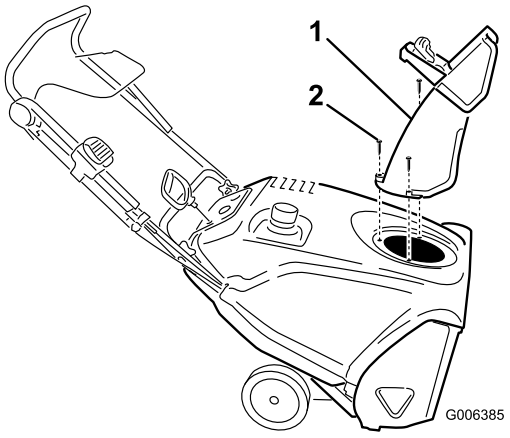

Figure 7

1. Discharge chute
2. Screw (3)

Note: For easier installation, use a small ratchet wrench to tighten the screws.

Important: Do not overtighten the screws; otherwise you may damage the discharge chute and prevent it from turning freely.

3

Filling the Engine with Oil

No Parts Required

Procedure

Your machine does not come with oil in the engine, but it does come with a bottle of oil.

Important: Before starting the engine, fill the engine with oil.

Note: The bottle of oil may contain more than is required. Do not overfill the engine.

Max fill: 20 oz. (0.6 l), type: automotive detergent oil with an API service classification of SJ, SL, or higher.

Use Figure 8 below to select the best oil viscosity for the outdoor temperature range expected:

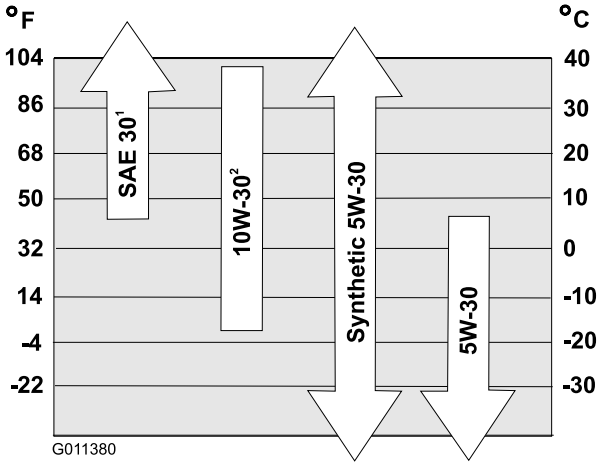

Figure 8

1. Using SAE 30 at outdoor temperatures below 40°F (4°C) will result in hard starting.
2. Using 10W-30 at outdoor temperatures above 80°F (27°C) may result in increased oil consumption; therefore, check the oil level more frequently in these circumstances.

Note: 0W30 synthetic oil is acceptable for use in cold temperatures.

1. Move the machine to a level surface.
2. Clean around the oil fill cap (Figure 9).

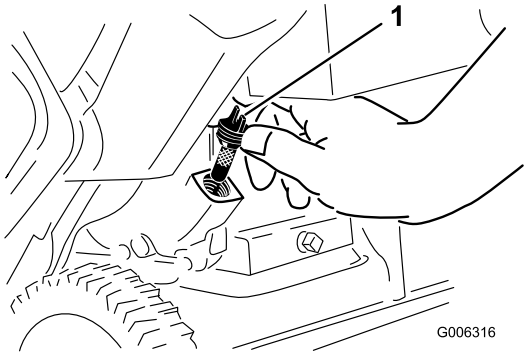

Figure 9

1. Oil fill cap

3. Unscrew the oil fill cap and remove it.
4. With the machine in the operating position, **carefully** pour oil into the crankcase. Wait 3 minutes, then add oil until the point of overflow.

Note: You may tip the machine forward (handle up) a little to make adding oil easier. Remember to return the machine to the operating position before checking the oil level.

Important: Do not tip the machine all the way forward onto its nose, or fuel may leak out of the machine.

5. Screw the oil fill cap into the oil fill hole and tighten it securely.

4

Adjusting the Control Cable

No Parts Required

Procedure

Refer to Adjusting the Control Cable in Maintenance.

Product Overview

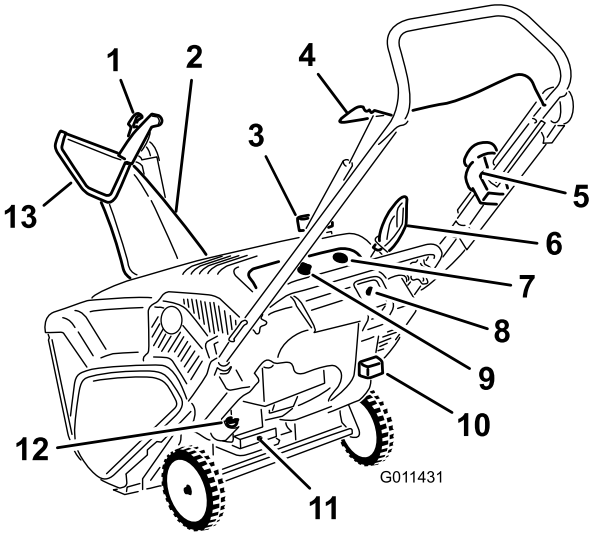

Figure 10

1. Chute deflector trigger
2. Discharge chute
3. Fuel tank cap
4. Control bar
5. Quick Shoot™ control
6. Recoil start handle
7. Primer
8. Electric-start button (model 38569 only)
9. Ignition key
10. Choke lever
11. Oil drain plug
12. Oil fill cap
13. Chute deflector

Operation

Note: Determine the left and right sides of the machine from the normal operating position.

⚠ DANGER

Gasoline is extremely flammable and explosive. A fire or explosion from gasoline can burn you and others.

- **To prevent a static charge from igniting the gasoline, place the container and/or machine on the ground before filling, not in a vehicle or on an object.**
- **Fill the tank outdoors when the engine is cold. Wipe up spills.**
- **Do not handle gasoline when smoking or around an open flame or sparks.**
- **Store gasoline in an approved fuel container, out of the reach of children.**
- **Do not tip the machine backward with fuel in the fuel tank; otherwise, fuel may leak out of the machine.**

Filling the Fuel Tank

- For best results, use only clean, fresh, unleaded gasoline with an octane rating of 87 or higher ((R+M)/2 rating method).
- Oxygenated fuel with up to 10% ethanol or 15% MTBE by volume is acceptable.
- **Do Not** use ethanol blends of gasoline (such as E15 or E85) with more than 10% ethanol by volume. Performance problems and/or engine damage may result which may not be covered under warranty.
- **Do Not** use gasoline containing methanol.
- **Do Not** store fuel either in the fuel tank or fuel containers over the winter unless a fuel stabilizer is used.
- **Do Not** add oil to gasoline.

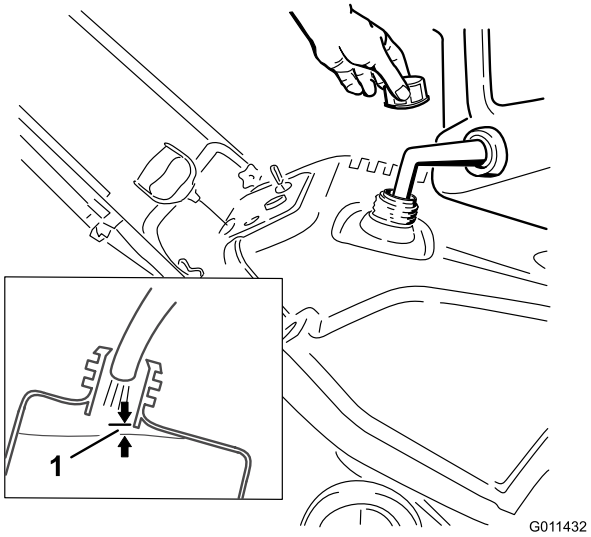

Figure 11

1. 1/4 inch (6 mm)

Important: Do not add oil to the gasoline.

Important: Do not use E85 or E20 fuel. Alternative fuels with high alcohol content can cause hard starting, poor engine performance, and may cause internal engine damage.

Note: For best results, purchase only the quantity of gasoline that you expect to use in 30 days. Otherwise, you may add fuel stabilizer to newly purchased gasoline to keep it fresh for up to 6 months.

Checking the Engine Oil Level

Service Interval: Before each use or daily—Check the engine oil level and add oil if necessary.

1. Move the machine to a level surface.
2. Clean around the oil fill cap (Figure 12).

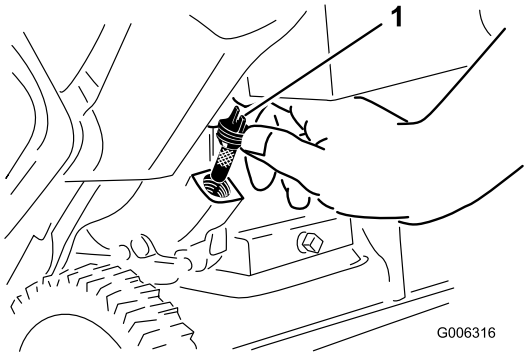

Figure 12

1. Oil fill cap

3. Unscrew the oil fill cap and remove it.
4. If the oil level is low, keep the machine in the operating position and **carefully** pour oil into the crankcase. Wait 3 minutes, then add oil until the point of overflow. (Max. fill: 20 oz. (0.6 l), type: SAE 30 detergent oil with an API service classification of SJ, SL, or higher.)

   Note: You may tip the machine forward (handle up) a little to make adding oil easier. Remember to return the machine to the operating position before checking the oil level.

   Important: Do not tip the machine all the way forward onto its nose, or fuel may leak out of the machine.
5. Screw the oil fill cap into the oil fill hole and hand tighten it securely.

Starting the Engine

1. Turn the ignition key clockwise to the On position (Figure 13).

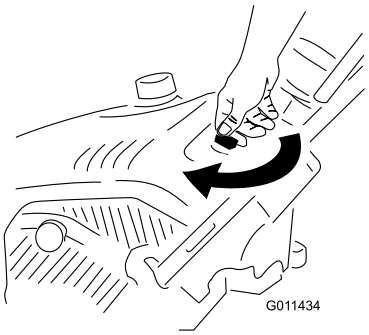

Figure 13

2. Pull out the choke lever (Figure 14).

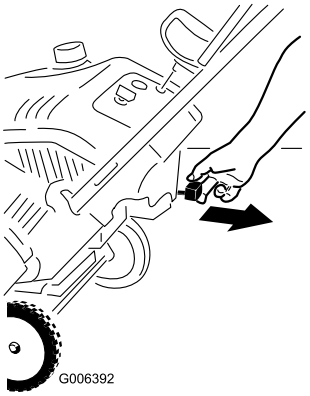

Figure 14

1. Choke lever

3. Firmly push in the primer with your thumb 3 times (0°F or -18°C or above) or 6 times (0°F or -18°C or below), holding the primer in a for a second before releasing it each time (Figure 15 and Figure 16).

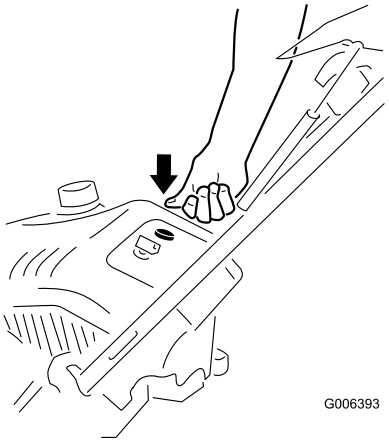

Figure 15

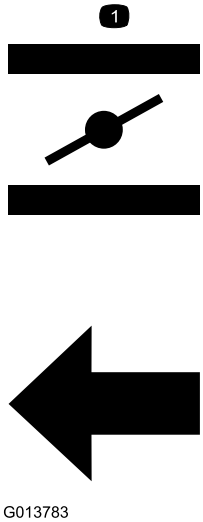

Figure 16

1. Symbols on the choke lever indicating to move the choke lever to the left to activate the choke.

Note: Remove your glove when you push in the primer so that air cannot escape from the primer hole.

Important: Do not use the primer or the choke if the engine has been running and is hot. Excessive priming may flood the engine and prevent it from starting.

4. Connect an extension cord to a power source and the machine, and push the electric-start button (model 38569 only) (Figure 17), or pull the recoil start handle (Figure 18).

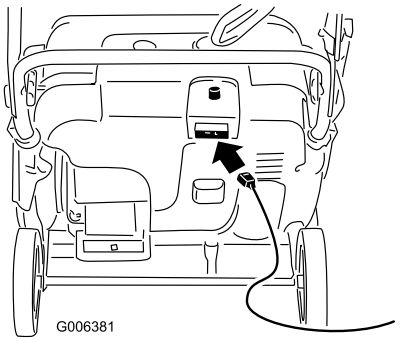

Figure 17

Note: Use only a UL-listed, 16-gauge extension cord recommended for outdoor use that is not longer than 50 feet (15 m).

⚠ WARNING

The electrical cord can become damaged, causing a shock or fire.

Thoroughly inspect the electrical cord before plugging it into a power source. If the cord is damaged, do not use it to start the machine. Replace or repair the damaged cord immediately. Contact an Authorized Service Dealer for assistance.

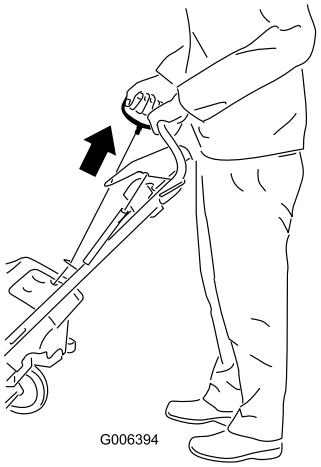

Figure 18

Important: Run the electric starter no more than 10 times at intervals of 5 seconds on, then 5 seconds off. Running the electric starter extensively can overheat and damage it. If the engine does not start after this series of attempts, wait at least 40 minutes to allow the starter to cool before attempting to start it again. If the engine does not start after the second series of attempts, take the machine to an Authorized Service Dealer for service (model 38569 only).

Note: If you pull the recoil handle and feel no resistance, the starter may be frozen. Thaw out the starter before attempting to start the machine.

5. While the engine is running, push in the choke lever slowly.
6. Unplug the extension cord from the power source and the machine (model 38569 only).

⚠ CAUTION

If you leave the machine plugged into a power source, someone can inadvertently start the machine and injure people or damage property (model 38569 only).

Unplug the power cord whenever you are not starting the machine.

Engaging the Rotor Blades

To engage the rotor blades, hold the control bar against the handle (Figure 19).

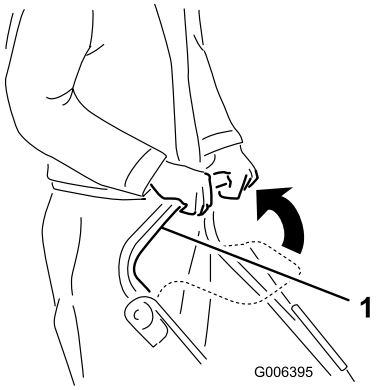

Figure 19

1. Control bar

Disengaging the Rotor Blades

To disengage the rotor blades, release the control bar (Figure 20).

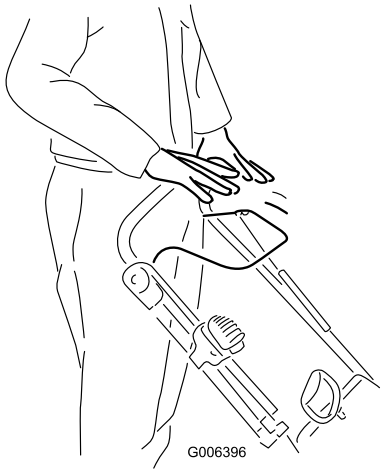

Figure 20

Stopping the Engine

To stop the engine, turn the ignition key counterclockwise to the Off position (Figure 21).

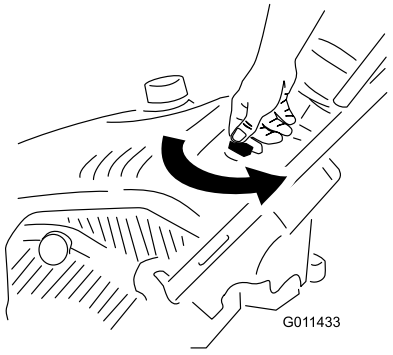

Figure 21

Adjusting the Discharge Chute and Chute Deflector

To adjust the discharge chute, press the trigger of the Quick Shoot™ control on the right hand side of the handle and move it up or down along the handle. Moving the control down the handle rotates the discharge chute to the left; moving the control up the handle rotates the discharge chute to the right (Figure 22).

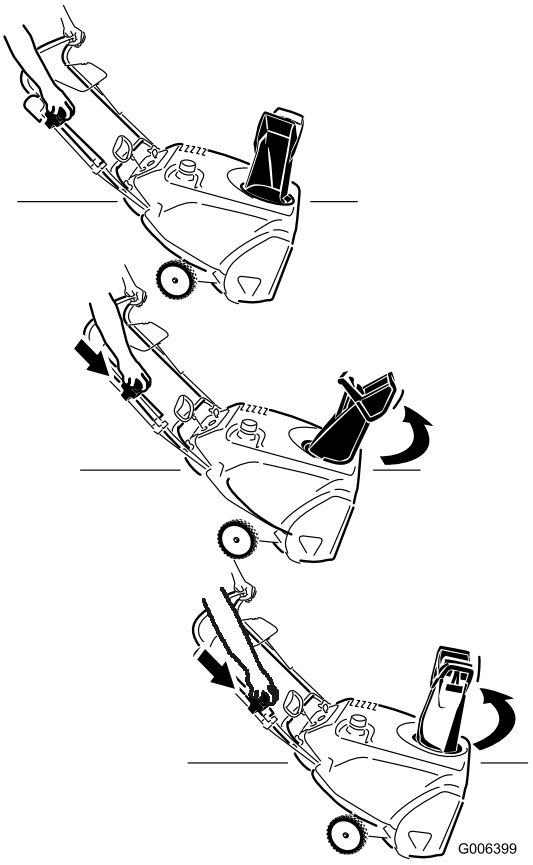

Figure 22

To raise or lower the angle of the chute deflector, press the trigger on the chute deflector and move the chute deflector up or down (Figure 23).

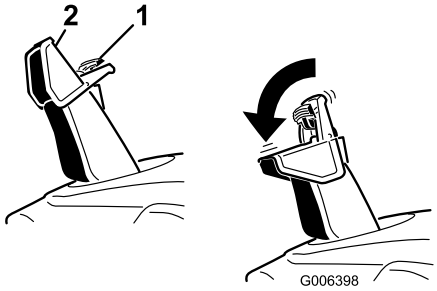

Figure 23

1. Chute deflector trigger
2. Chute deflector

Clearing a Clogged Discharge Chute

Important: Hand contact with the rotating rotor blades inside the discharge chute is the most common cause of injury associated with snow throwers. Never use your hand to clean out the discharge chute.

To clear the chute:

- **Shut the engine off!**
- Wait 10 seconds to be sure the rotor blades have stopped rotating.
- Always use a clean-out tool, not your hands (Figure 24).

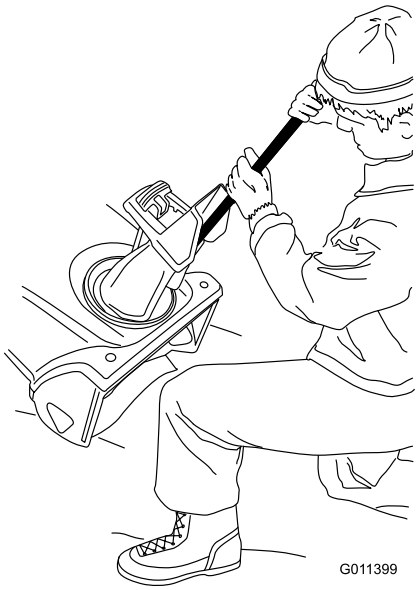

Figure 24

Preventing Freeze-up after Use

- Let the engine run for a few minutes to prevent moving parts from freezing. Stop the engine, wait for all moving parts to stop, and remove ice and snow from the machine.
- Clean off any snow and ice from the base of the chute.
- Rotate the discharge chute left and right to free it from any ice buildup.
- With the ignition key in the Off position, pull the recoil starter handle several times or connect the electrical cord to a power source and the machine and push the electric start button once (model 38569

only) to prevent the recoil starter and/or the electric starter from freezing up.

- In snowy and cold conditions, some controls and moving parts may freeze. Do not use excessive force when trying to operate frozen controls. If you have difficulty operating any control or part, start the engine and let it run for a few minutes.

Operating Tips

⚠ WARNING

The rotor blades can throw stones, toys, and other foreign objects and cause serious personal injury to the operator or to bystanders.

- **Keep the area to be cleared free of all objects that the rotor blades could pick up and throw.**
- **Keep all children and pets away from the area of operation.**
- Remove the snow as soon as possible after it falls.
- If the machine does not propel itself forward on slippery surfaces or in heavy snow, push forward on the handle, but allow the machine to work at its own pace.
- Overlap each swath to ensure complete snow removal.
- Discharge the snow downwind whenever possible.

Maintenance

Note: Determine the left and right sides of the machine from the normal operating position.

Recommended Maintenance Schedule(s)

Maintenance Service Interval	Maintenance Procedure
After the first hour	• Check the control cable and adjust it if necessary. • Check for loose fasteners and tighten them if necessary.
After the first 2 hours	• Change the engine oil.
Before each use or daily	• Check the engine oil level and add oil if necessary.
Yearly	• Check the control cable and adjust it if necessary. • Inspect the rotor blades and have an Authorized Service Dealer replace the rotor blades and scraper if necessary. • Change the engine oil. • Service the spark plug and replace it if necessary. • Check for loose fasteners and tighten them if necessary. • Have an Authorized Service Dealer inspect the drive belt and replace it if necessary.
Yearly or before storage	• Prepare the machine for storage.

Adjusting the Control Cable

Checking the Control Cable

Service Interval: After the first hour—Check the control cable and adjust it if necessary.

Yearly—Check the control cable and adjust it if necessary.

Move the control bar back toward the handle to remove the slack in the control cable (Figure 25).

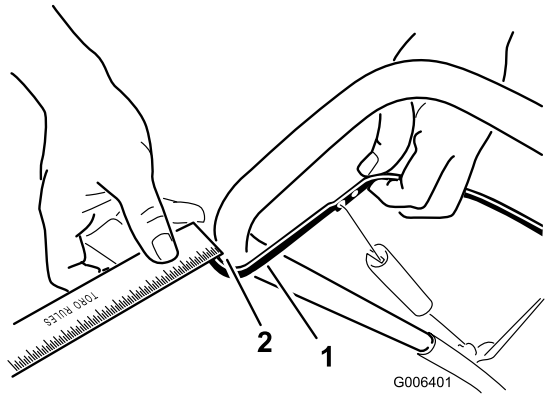

Figure 25

1. Control bar
2. 1/16-inch to 1/8-inch (2 mm to 3 mm) gap

Note: Ensure that a 1/16-inch to 1/8-inch (2 mm to 3 mm) gap exists between the control bar and the handle (Figure 25).

Important: The control cable must contain some slack when you disengage the control bar for the rotor blades to stop properly.

Adjusting the Control Cable

1. Slide up the spring cover and unhook the spring from the adjuster link (Figure 26).

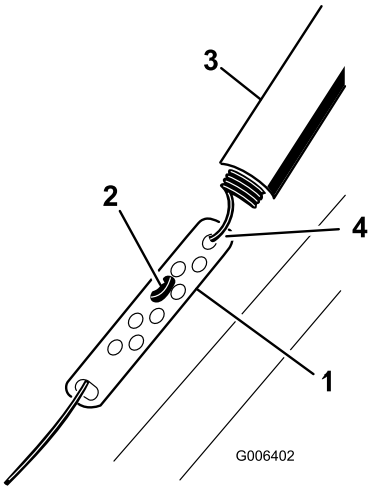

Figure 26

1. Adjuster link
2. Z-fitting
3. Spring cover
4. Unhook the spring here.

Note: You can pull up the adjuster link and cable to make unhooking the spring easier.

2. Move the Z-fitting to a higher or lower hole on the adjuster link as needed to obtain the 1/16-inch to 1/8-inch (2 mm to 3 mm) gap between the control bar and the handle (Figure 25).

Note: Moving the Z-fitting higher decreases the gap between the control bar and the handle; moving it lower increases the gap.

3. Hook the spring to the adjuster link and slide the spring cover over the adjuster link.
4. Check the adjustment; refer to Checking the Control Cable.

Note: After extended use, the drive belt may wear and lose its proper belt tension. If the drive belt slips (continuously squeals) under a heavy load, disconnect the spring from the adjustor link and move the upper end of the spring to the hole that is further from the pivot point in the control bar (Figure 27). Then connect the spring to the adjustor link and adjust the control cable.

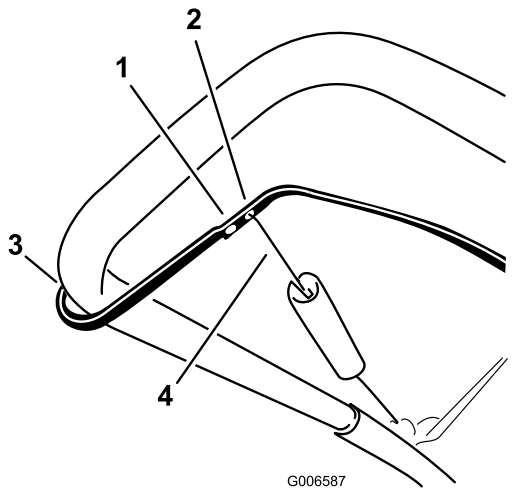

Figure 27

1. Remove the upper end of spring from this hole
2. Insert the upper end of spring into this hole
3. Pivot point
4. Upper end of spring

Note: The belt may slip (squeal) in wet conditions; to dry out the drive system, start the rotor and run it without a load for 30 seconds.

Inspecting the Rotor Blades

Service Interval: Yearly—Inspect the rotor blades and have an Authorized Service Dealer replace the rotor blades and scraper if necessary.

Before each session, inspect the rotor blades for wear. When a rotor blade edge has worn down to the wear indicator hole, have an Authorized Service Dealer replace the rotor blades and the scraper (Figure 28).

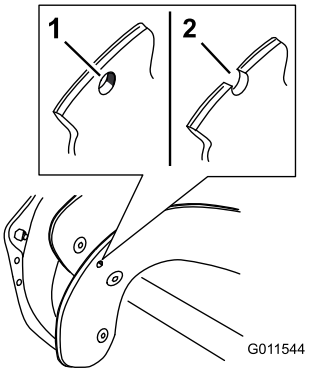

Figure 28

1. The wear indicator hole is intact; you do not need to replace the rotor blades.
2. The wear indicator hole is exposed; replace the rotor blades.

Changing the Engine Oil

Service Interval: After the first 2 hours

Yearly

Run the engine a few minutes before changing the oil to warm it. Warm oil flows better and carries more contaminants.

1. Siphon the fuel from the fuel tank into an approved fuel container, or run the engine until it stops.
2. Move the machine to a level surface.
3. Place an oil drain pan under the oil drain plug, remove the oil drain plug, and tip the machine backward and drain the used oil in the oil drain pan Figure 29).

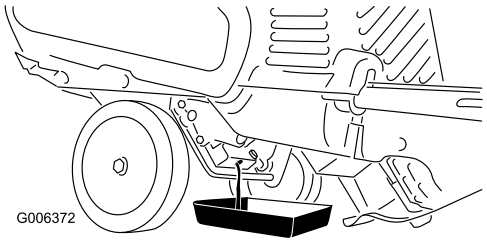

Figure 29

4. After draining the used oil, return the machine to the operating position.
5. Install the oil drain plug and tighten it securely.
6. Clean around the oil fill cap (Figure 30).

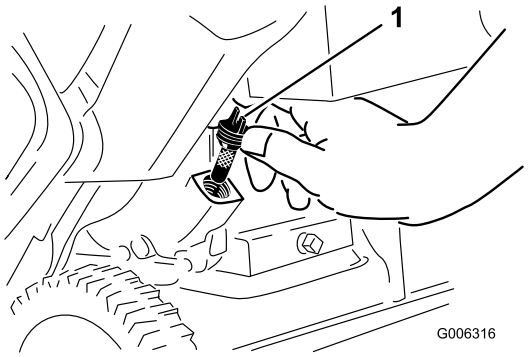

Figure 30

1. Oil fill cap

7. Unscrew the oil fill cap and remove it (Figure 30).
8. With the machine in the operating position, **carefully** pour oil into the oil fill hole. Wait three minutes, then add oil to the point of overflow (Figure 32).

Note: You may tip the machine forward (handle up) a little to make adding oil easier. Remember to return the machine to the operating position before checking the oil level.

Important: Do not tip the machine all the way forward onto its nose, or fuel may leak out of the machine.

Max fill: 20 oz. (0.6 l), type: automotive detergent oil with an API service classification of SJ, SL, or higher.

Use Figure 31 below to select the best oil viscosity for the outdoor temperature range expected:

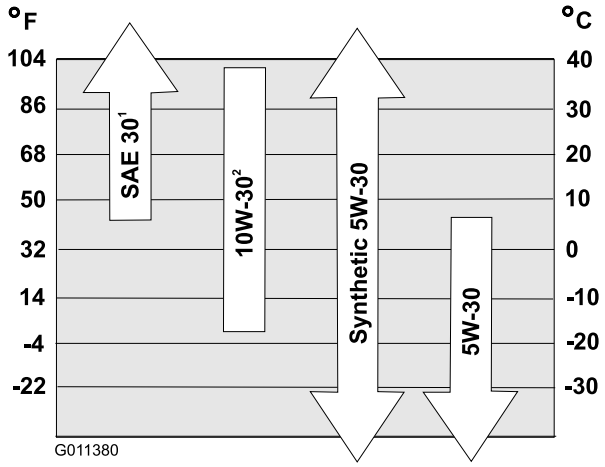

Figure 31

1. Using SAE 30 at outdoor temperatures below 40°F (4°C) will result in hard starting.
2. Using 10W-30 at outdoor temperatures above 80°F (27°C) may result in increased oil consumption; therefore, check the oil level more frequently in these circumstances.

Note: 0W30 synthetic oil is acceptable for use in cold temperatures.

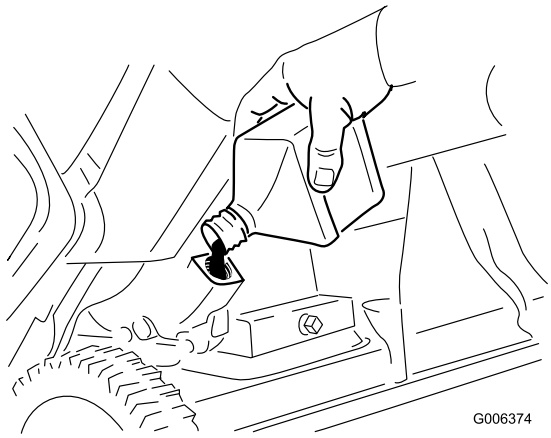

Figure 32

9. Screw the oil fill cap into the oil fill hole, and hand tighten it securely.
10. Wipe up any spilled oil.
11. Dispose of the used oil properly at a local recycling center.

Servicing the Spark Plug

Service Interval: Yearly—Service the spark plug and replace it if necessary.

Use a **NGK BPR6ES or Champion RN9YC** spark plug or equivalent.

1. Stop the engine and wait for all moving parts to stop.
2. Rotate the discharge chute so that it faces forward.
3. Remove the discharge chute, the discharge chute handle, and the chute seal by removing the 3 large screws and one small screw (Figure 33).

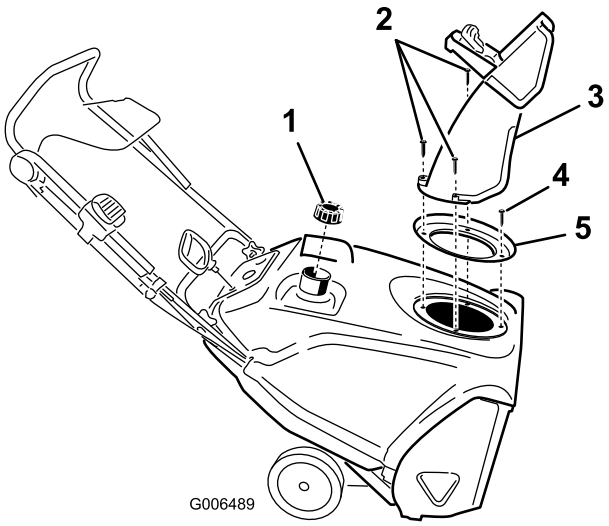

Figure 33

1. Fuel tank cap
2. Large screws (3)
3. Discharge chute
4. Small screw
5. Chute seal

4. Remove the 4 screws that secure the shroud (Figure 34).

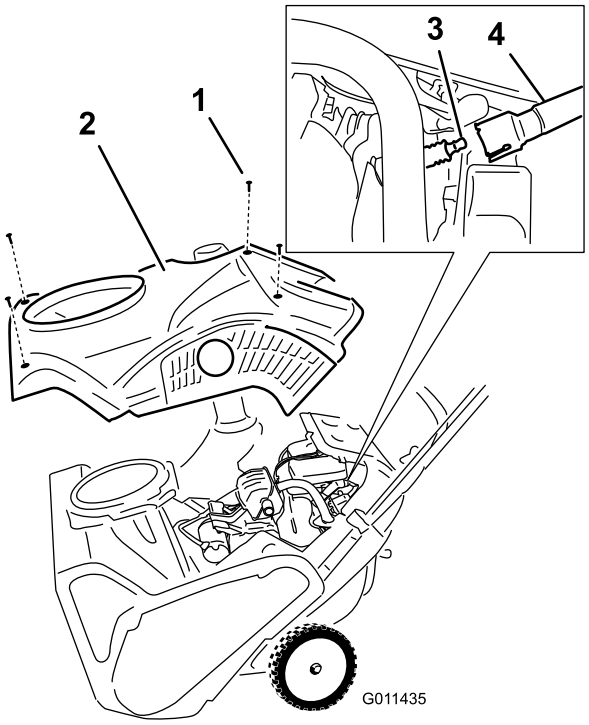

Figure 34

1. Screw (4)
2. Shroud
3. Spark plug
4. Spark-plug wire

5. Remove the fuel tank cap.
6. Remove the shroud (Figure 34).
7. Install the fuel tank cap.
8. Disconnect the wire from the spark plug.
9. Clean around the spark plug.
10. Remove the spark plug from the cylinder head.

Important: Replace a cracked, fouled, or dirty spark plug. Do not clean the electrodes because grit entering the cylinder can damage the engine.

11. Set the gap on the plug to 0.030 inch (0.76 mm) (Figure 35).

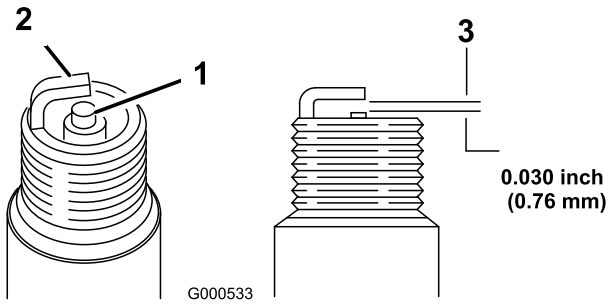

Figure 35

1. Center electrode insulator
2. Side electrode
3. Air gap (not to scale)

12. Install the spark plug and torque it to 20–22 ft-lb (27–30 N-m).
13. Connect the wire to the spark plug.

Note: Ensure that the breather tube is routed above the spark plug wire as shown in Figure 36.

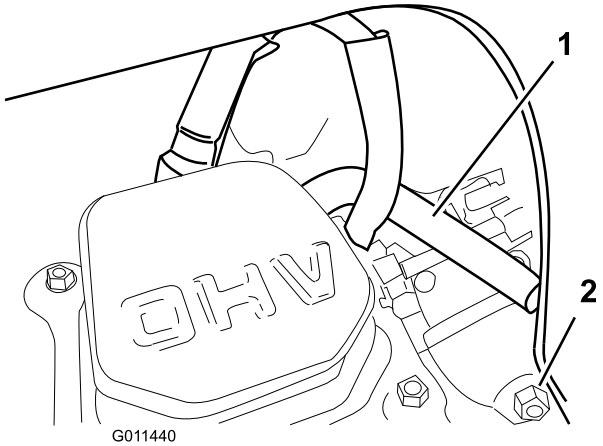

Figure 36

1. Breather tube
2. Carburetor drain bolt

14. Remove the fuel tank cap.
15. Install the shroud with the screws you removed in step 4.

Note: Ensure that the upper and lower shrouds fit together in the side grooves.

16. Install the fuel tank cap.
17. Install the chute seal, the discharge chute, and the discharge chute handle onto the machine using the hardware you removed in step 3.

Note: The small screw goes through the small hole in the chute seal at the front of the discharge chute opening.

Adjusting the Quick Shoot™ Control

If there is more than 1/2 inch (13 mm) of slack in the Quick Shoot cable (Figure 37) or the discharge chute does not rotate left and right in equal angles, adjust the Quick Shoot control cables.

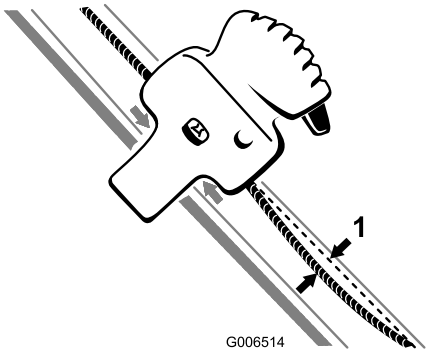

Figure 37

1. 1/2 inch (13 mm) maximum slack

1. Loosen the two Quick Shoot control cable clamps (Figure 38).

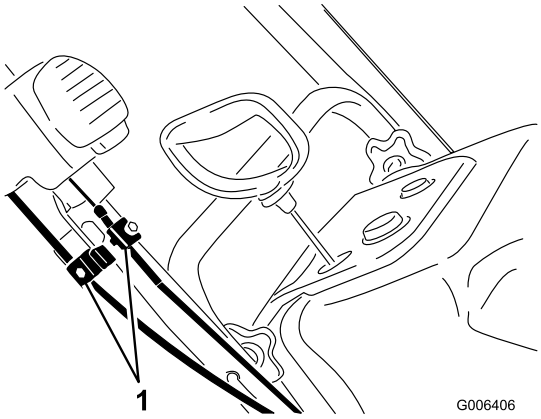

Figure 38

1. Cable clamps

2. Position the Quick Shoot control between the two arrows located on the right hand side of the upper handle (Figure 39).

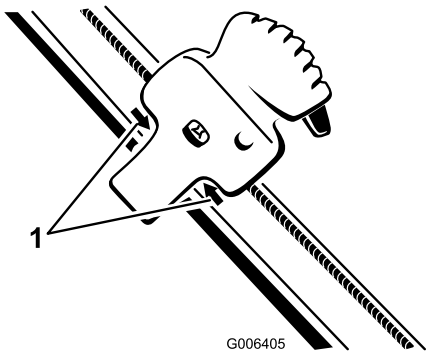

Figure 39

1. Arrows

3. Rotate the discharge chute so that it faces straight ahead and the arrow on the back of the discharge chute aligns with the arrow on the shroud (Figure 40).

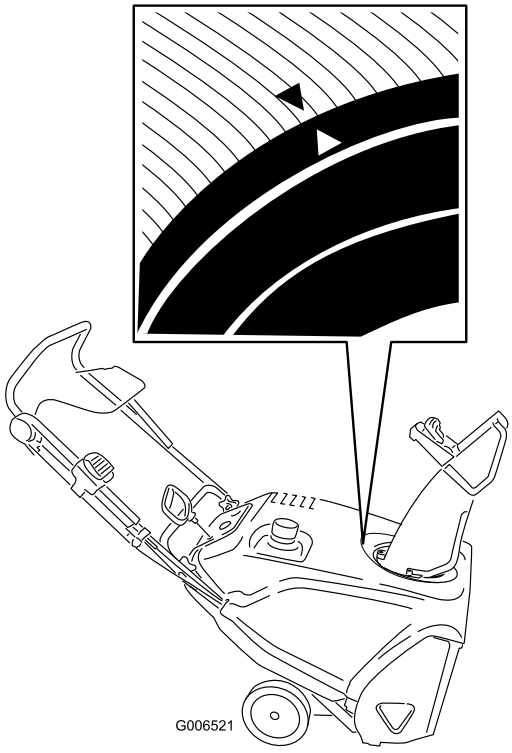

Figure 40

4. Hold the discharge chute in the straight-ahead position, pull the lower cable casing downward until you remove the slack in the cable, and tighten the screw on the lower cable clamp securely (Figure 41).

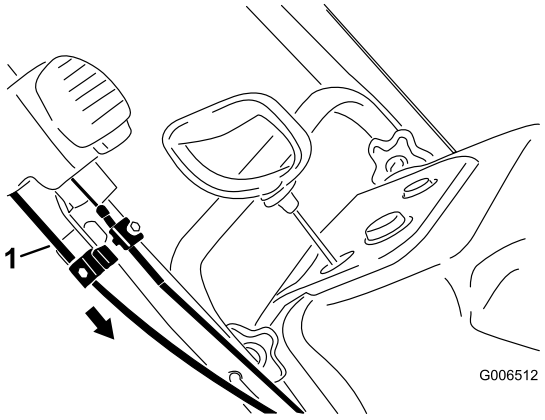

Figure 41

1. Lower cable casing

5. Pull the upper cable casing forward until you remove the slack in the cable, and tighten the screw on the upper cable clamp securely (Figure 42).

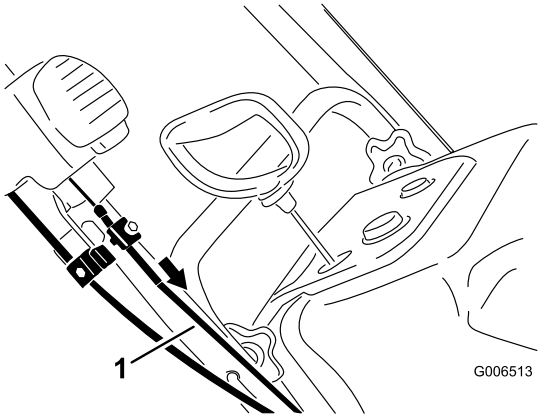

Figure 42

1. Upper cable casing

Note: Do not over-tension the cables. If the cables are over-tensioned, the Quick Shoot will be hard to operate.

Storage

Storing the Machine

⚠ WARNING

- **Gasoline fumes are highly flammable, explosive, and dangerous if inhaled. If you store the machine in an area with an open flame, the gasoline fumes may ignite and cause an explosion.**
- **Do not store the machine in a house (living area), basement, or any other area where ignition sources may be present, such as hot water and space heaters, clothes dryers, furnaces, and other like appliances.**
- **Do not tip the machine backward with fuel in the fuel tank; otherwise, fuel may leak out of the machine.**

1. On the last refueling of the season, add fuel stabilizer to fresh fuel as directed by the engine manufacturer.
2. Run the engine for 10 minutes to distribute the conditioned fuel through the fuel system.
3. Stop the engine, allow it to cool, and siphon the fuel tank or run the engine until it stops.
4. Start the engine and run it until it stops.
5. Choke or prime the engine, start it a third time, and run the engine until it will not start.
6. Drain the fuel in the carburetor through the carburetor drain bolt (Figure 36) into an approved gasoline container.
7. Dispose of unused fuel properly. Recycle it according to local codes, or use it in your automobile.
8. While the engine is still warm, change the engine oil. Refer to Changing the Engine Oil.
9. Remove the spark plug.
10. Squirt 2 teaspoons of oil into the spark plug hole.
11. Install the spark plug by hand and then torque it to 20–22 ft-lb (27–30 N-m).
12. With the ignition key in the Off position, pull the recoil starter slowly to distribute the oil on the inside of the cylinder.
13. Clean the machine.
14. Touch up chipped surfaces with paint available from an Authorized Service Dealer. Sand affected areas before painting, and use a rust preventative to prevent the metal parts from rusting.
15. Tighten any loose fasteners. Repair or replace any damaged parts.
16. Cover the machine and store it in a clean, dry place out of the reach of children. Allow the engine to cool before storing it in any enclosure.

Notes:

European Privacy Notice

The Information Toro Collects
Toro Warranty Company (Toro) respects your privacy. In order to process your warranty claim and contact you in the event of a product recall, we ask you to share certain personal information with us, either directly or through your local Toro company or dealer.

The Toro warranty system is hosted on servers located within the United States where privacy law may not provide the same protection as applies in your country.

BY SHARING YOUR PERSONAL INFORMATION WITH US, YOU ARE CONSENTING TO THE PROCESSING OF YOUR PERSONAL INFORMATION AS DESCRIBED IN THIS PRIVACY NOTICE.

The Way Toro Uses Information
Toro may use your personal information to process warranty claims, to contact you in the event of a product recall and for any other purpose which we tell you about. Toro may share your information with Toro's affiliates, dealers or other business partners in connection with any of these activities. We will not sell your personal information to any other company. We reserve the right to disclose personal information in order to comply with applicable laws and with requests by the appropriate authorities, to operate our systems properly or for our own protection or that of other users.

Retention of your Personal Information
We will keep your personal information as long as we need it for the purposes for which it was originally collected or for other legitimate purposes (such as regulatory compliance), or as required by applicable law.

Toro's Commitment to Security of Your Personal Information
We take reasonable precautions in order to protect the security of your personal information. We also take steps to maintain the accuracy and current status of personal information.

Access and Correction of your Personal Information
If you would like to review or correct your personal information, please contact us by email at legal@toro.com.

Intl Dist List

Distributor:	Country:	Phone Number:
Atlantis Su ve Sulama Sisstemleri Lt	Turkey	90 216 344 86 74
Balama Prima Engineering Equip.	Hong Kong	852 2155 2163
B-Ray Corporation	Korea	82 32 551 2076
Casco Sales Company	Puerto Rico	787 788 8383
Ceres S.A.	Costa Rica	506 239 1138
CSSC Turf Equipment (pvt) Ltd.	Sri Lanka	94 11 2746100
Cyril Johnston & Co.	Northern Ireland	44 2890 813 121
Equiver	Mexico	52 55 539 95444
Femco S.A.	Guatemala	502 442 3277
G.Y.K. Company Ltd.	Japan	81 726 325 861
Geomechaniki of Athens	Greece	30 10 935 0054
Guandong Golden Star	China	86 20 876 51338
Hako Ground and Garden	Sweden	46 35 10 0000
Hako Ground and Garden	Norway	47 22 90 7760
Hayter Limited (U.K.)	United Kingdom	44 1279 723 444
Hydroturf Int. Co Dubai	United Arab Emirates	97 14 347 9479
Hydroturf Egypt LLC	Egypt	202 519 4308
Ibea S.P.A.	Italy	39 0331 853611
Irriamc	Portugal	351 21 238 8260
Irrigation Products Int'l Pvt Ltd.	India	86 22 83960789
Jean Heybroek b.v.	Netherlands	31 30 639 4611
Maquiver S.A.	Colombia	57 1 236 4079
Maruyama Mfg. Co. Inc.	Japan	81 3 3252 2285
Metra Kft	Hungary	36 1 326 3880
Mountfield a.s.	Czech Republic	420 255 704 220
Munditol S.A.	Argentina	54 11 4 821 9999
Oslinger Turf Equipment SA	Ecuador	593 4 239 6970
Oy Hako Ground and Garden Ab	Finland	358 987 00733
Parkland Products Ltd.	New Zealand	64 3 34 93760
Prochaska & Cie	Austria	43 1 278 5100
RT Cohen 2004 Ltd.	Israel	972 986 17979
Riversa	Spain	34 9 52 83 7500
Sc Svend Carlsen A/S	Denmark	45 66 109 200
Solvert S.A.S.	France	33 1 30 81 77 00
Spypros Stavrinides Limited	Cyprus	357 22 434131
Surge Systems India Limited	India	91 1 292299901
T-Markt Logistics Ltd.	Hungary	36 26 525 500
Toro Australia	Australia	61 3 9580 7355
Toro Europe NV	Belgium	32 14 562 960

The Toro Warranty

Conditions and Products Covered

The Toro Company and its affiliate, Toro Warranty Company, pursuant to an agreement between them, jointly promise to the original purchaser* to repair the Toro Products listed below if defective in materials or workmanship.

The following time periods apply from the date of purchase:

Products	Warranty Period
Walk Power Mowers	
• Cast Deck	5 years Residential Use[2] 45 Days Commercial Use
• Engine	5 years GTS Promise See engine manufacturer's warranty[1]
• Steel Deck	2 years Residential Use[2] 45 Days Commercial Use
• Engine	2 years GTS Promise See engine manufacturer's warranty[1]
Electric Hand Held Products	2 year limited warranty
Snowthrowers	
• Single Stage	2 years Residential Use[2] 45 Days Commercial Use
• Two Stage	2 years Residential Use[2] 45 Days Commercial Use
• Electric	2 years Residential Use[2]
All Ride-On Units Below	
• Engine	See engine manufacturer's warranty[1] 1 year Parts only
• Attachments	1 year
Rear Engine Riders	2 years Residential Use[2] 90 Days Commercial Use
Lawn & Garden Tractors	2 years Residential Use[2] 90 Days Commercial Use
TimeCutter Z Mowers	3 years Residential Use[2] 30 Days Commercial Use
TITAN Mowers	3 years or 240 hours[3]
• Frame	Lifetime (original owner only)[4]
TITAN MX Mowers	3 years or 400 hours[3]
• Frame	Lifetime (original owner only)[4]
Z Master Mowers — 2000 Series	5 years or 1200 hours[3]
• Frame	Lifetime (original owner only)[4]

*Original Purchaser means the person who originally purchased the Toro Product.

[1]Some engines used on Toro Products are warranted by the engine manufacturer.

[2]Residential use means use of the product on the same lot as your home. Use at more than one location is considered commercial use and the commercial use warranty would apply.

[3]Whichever occurs first.

[4]Lifetime Frame Warranty - If the main frame, consisting of the parts welded together to form the tractor structure that other components such as the engine are secured to, cracks or breaks in normal use, it will be repaired or replaced, at Toro's option, under warranty at no cost for parts and labor. Frame failure due to misuse or abuse and failure or repair required due to rust or corrosion are not covered.

This warranty includes the cost of parts and labor, but you must pay transportation costs.

Warranty may be denied if the hour meter is disconnected, altered, or shows signs of being tampered with.

Owner Responsibilities

You must maintain your Toro Product by following the maintenance procedures described in the *Operator's Manual*. Such routine maintenance, whether performed by a dealer or by you, is at your expense.

Instructions for Obtaining Warranty Service

If you think that your Toro Product contains a defect in materials or workmanship, follow this procedure:

1. Contact your seller to arrange service of the product. If for any reason it is impossible for you to contact your seller, you may contact any Toro Authorized Distributor to arrange service.
2. Bring the product and your proof of purchase (sales receipt) to the Service Dealer. If for any reason you are dissatisfied with the Service Dealer's analysis or with the assistance provided, contact us at:

   Customer Care Department, RLC Division
   The Toro Company
   8111 Lyndale Avenue South
   Bloomington, MN 55420-1196
   Manager: Technical Product Support: 001–952–887–8248

   See attached Distributor List

Items and Conditions Not Covered

This express warranty does not cover the following:

- Cost of regular maintenance service or wear parts, such as blades, rotor blades (paddles), scraper blades, belts, fuel, lubricants, oil changes, spark plugs, cable/linkage or brake adjustments
- Any product or part which has been altered or misused and requires replacement or repair due to accidents or lack of proper maintenance
- Repairs necessary due to failure to use fresh fuel (less than one month old), or failure to properly prepare the unit prior to any period of non-use over one month
- Engine and transmission. These are covered by the appropriate manufacturer's guarantees with separate terms and conditions

All repairs covered by these warranties must be performed by an Authorized Toro Service Dealer using Toro approved replacement parts.

General Conditions

The purchaser is covered by the national laws of each country. The rights to which the purchaser is entitled with the support of these laws are not restricted by this warranty.