Form No. 3373-696 Rev A

TORO®

Count on it.

Parts Catalog

# CCR™ 6053 R Quick Clear Snowthrower

**Model No. 38567—Serial No. 313000001 and Up**

Register at www.Toro.com.
Original Instructions (EN)

CE

*3373-696* A

# Ordering Replacement Parts

To order replacement parts, please supply the part number, the quantity, and the description of each part desired.

**Understanding Reference Numbers**

Each identified part in an illustration has a reference number. The reference number for a part also appears in the parts list, along with other information about the part.

This catalog uses two special reference number formats, one to indicate parts in a service assembly and another to indicate the quantity of a given part in an illustration.

**Service Assembly Reference Numbers**

Parts in service assemblies have reference numbers in the form a:b. The a represents the reference number of the entire service assembly and the b represents a sequential number unique to each part within the service assembly.

For example, a wheel assembly might be identified by reference number 6, the tire by 6:1, the valve by 6:2, and the wheel by 6:3. When you order the assembly identified by reference number 6, you receive all parts identified by reference numbers 6:1,6:2, and 6:3. However, you may also order any part individually. Reference numbers of this type appear in illustration and in parts lists.

**Reference Numbers Indicating Quantity**

In an illustration, if a reference number indicates more than one part, the reference number has the form nX y. The n represents the quantity of the part, the X is the multiplication symbol, and the y represents the reference number.

For example, in an illustration, the reference number 2X 37 means that two of the parts identified by reference number 37 are indicated.

# List of Abbreviations

**AR:** as required

**ASM:** assembly

**BBC:** blade brake control

**BHTF:** button head thread forming

**CARR:** carriage

**CCW:** counter clockwise

**CW:** clockwise

**DEG:** degrees

**DPA:** Dual Point Adjustment

**ECM:** electronic control module

**EXT:** external

**FH:** flat head

**GA:** gauge

**HD:** heavy-duty

**HF:** hex flange

**HH:** hex head

**HHF:** hex head flange

**HHFTF:** hex head flange thread forming

**HJ:** hex jam

**HLH:** hex lag head

**HOC:** height-of-cut

**HSBH:** hex socket button head

**HSFH:** hex socket flat head

**HSH:** hex socket head

**HWH:** hex washer head

**HWHTF:** hex washer head thread forming

**HYD:** hydraulic

**LH:** left hand

**LPG:** Liquid Propane Gas

**NI:** nylon insert

**NPTF:** national pipe thread fine

**PFH:** phillips flat head

**PPH:** phillips pan head

**PPHTF:** phillips pan head thread forming

**PRH:** phillips round head

**PTH:** phillips truss head

**PTO:** power-take-off

**RH:** right hand

**ROPS:** roll-over protection system

**RRB:** rear roller brush

**SFH:** slotted fillister head

**SHH:** slotted hex head

**SHWH:** slotted hex washer head

**SPH:** slotted pan head

**SQH:** square head

**SRH:** slotted round head

**STD:** standard

**TAP:** self tapping

**TTH:** torx truss head

# Contents

Main Frame Assembly . . . . . 4
Rotor Drive Assembly . . . . . 5
Rotor Assembly . . . . . 6
Engine Assembly . . . . . 7
Engine Assembly No. 1 . . . . . 8
Engine Assembly No. 2 . . . . . 10
Engine Assembly No. 3 . . . . . 12
Shroud Assembly . . . . . 13
Chute Control Assembly . . . . . 14
Upper Handle Assembly . . . . . 15
Handle Chute Control Assembly . . . . . 16
Attachments and Accessories . . . . . 17

**© 2012—The Toro® Company**
**8111 Lyndale Avenue South**
**Bloomington, MN 55420**



**Contact us at www.Toro.com.**
**Printed in the USA.**
**All Rights Reserved**

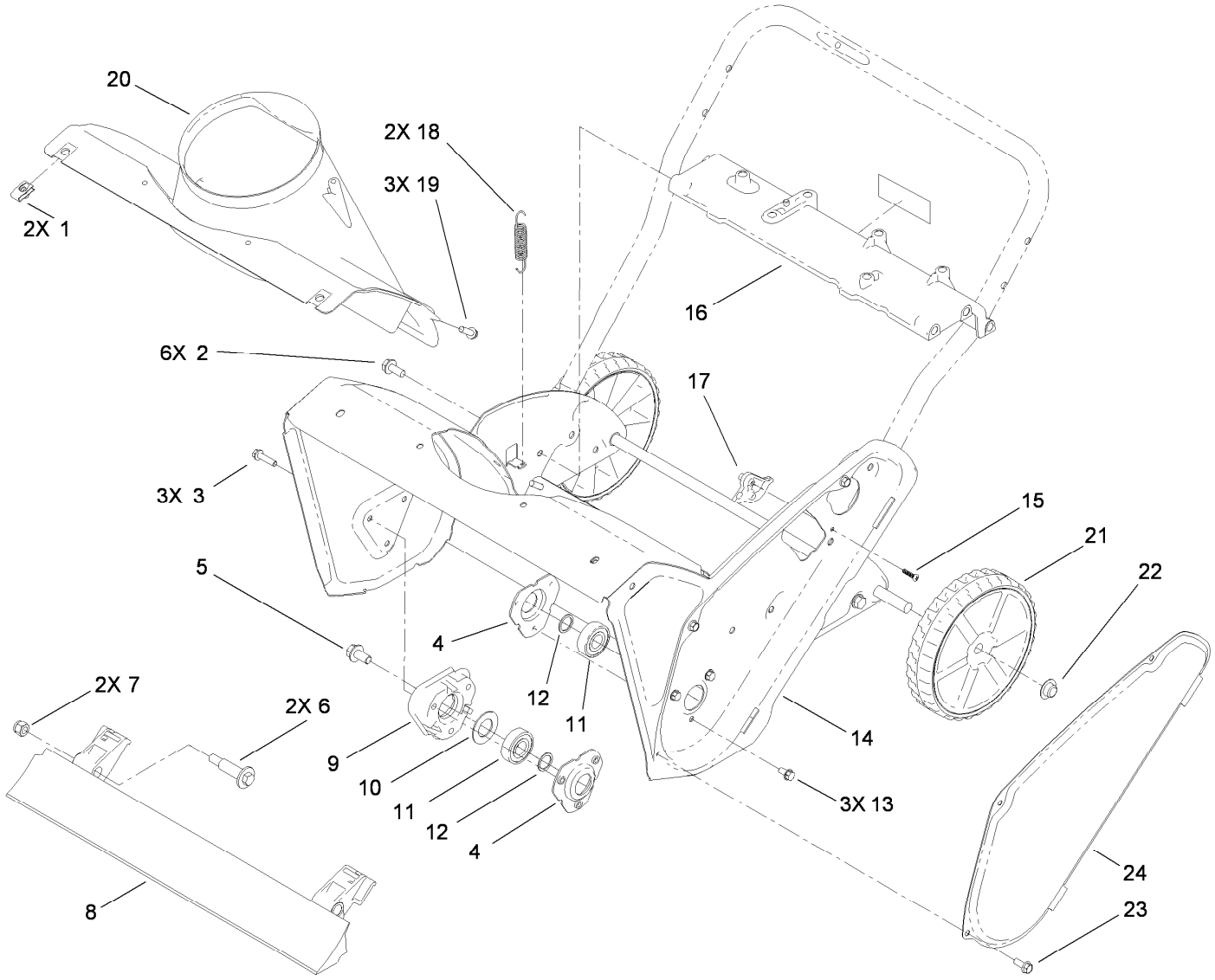


# Main Frame Assembly

| Ref. | Part Number | Qty. | Description |
|---|---|---|---|
| 1 | 107069 | 2 | Clip |
| 2 | 32144-11 | 6 | Screw-HWHTF |
| 3 | 32144-86 | 3 | Screw-HWHTF |
| 4 | 108-4943 | 2 | Flange-Bearing |
| 5 | 110-9380 | 1 | Screw-HWH |
| 6 | 56-6590 | 2 | Bolt-Wheel |
| 7 | 3296-39 | 2 | Nut-Lock, NI |
| 8 | 108-4884 | 1 | Blade-Scraper |
| 9 | 114-3781 | 1 | Spacer-Bearing, RH |
| 10 | 110-9353 | 1 | Washer-Rubber |
| 11 | 100-1048 | 2 | Bearing-Ball |
| 12 | 52-7280 | 2 | Washer-Thrust |

| Ref. | Part Number | Qty. | Description |
|---|---|---|---|
| 13 | 32144-4 | 3 | Screw-HWH |
| 14 | 108-4868-03 | 1 | Housing-Auger |
| 15 | 94-4496 | 1 | Screw-PPH |
| 16 | 108-4905 | 1 | Brace-Frame |
| 17 | 108-4919 | 1 | Guide-Cable, Clutch |
| 18 | 108-4906 | 2 | Spring-Extension |
| 19 | 46-8091 | 3 | Screw-HWH |
| 20 | 108-4871 | 1 | Chute-Lower |
| 21 | 117-2309 | 2 | Wheel ASM |
| 22 | 32112-14 | 2 | Nut-Push |
| 23 | 32144-85 | 3 | Screw-HWH |
| 24 | 108-4893-03 | 1 | Cover-Belt |

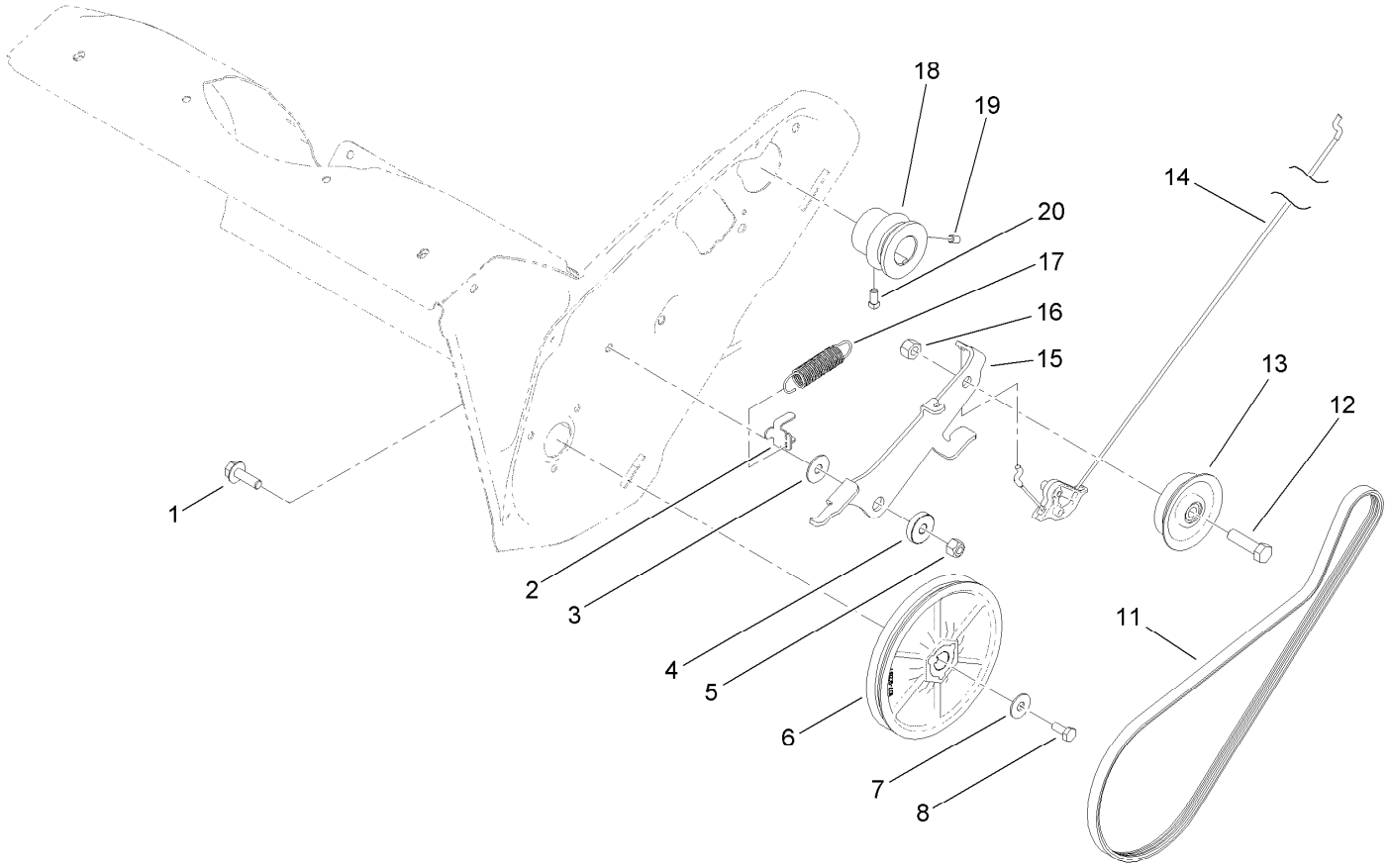


# Rotor Drive Assembly

| Ref. | Part Number | Qty. | Description |
|---|---|---|---|
| 1 | 3234-29 | 1 | Screw-HHF |
| 2 | 108-4938 | 1 | Clip-Spring, Brake |
| 3 | 108-4925 | 1 | Washer |
| 4 | 108-4916 | 1 | Bushing-Pivot |
| 5 | 3296-29 | 1 | Nut-Lock, NI |
| 6 | 107-9287 | 1 | Rotor Pulley ASM |
| 7 | 3290-456 | 1 | Washer-Belleville |
| 8 | 110-9381 | 1 | Screw-HH |
| 11 | 108-4921 | 1 | Belt-Drive |

| Ref. | Part Number | Qty. | Description |
|---|---|---|---|
| 12 | 323-29 | 1 | Screw-HH |
| 13 | 114-3785 | 1 | Pulley-Idler |
| 14 | 115-5682 | 1 | Cable-Clutch |
| 15 | 114-3782 | 1 | Arm-Idler |
| 16 | 32152-2 | 1 | Nut-Lock, Cone |
| 17 | 121-6630 | 1 | Spring-Extension |
| 18 | 108-4934 | 1 | Pulley-Engine |
| 19 | 3245-32 | 1 | Screw-HSH |
| 20 | 3241-7 | 1 | Screw-SQH |

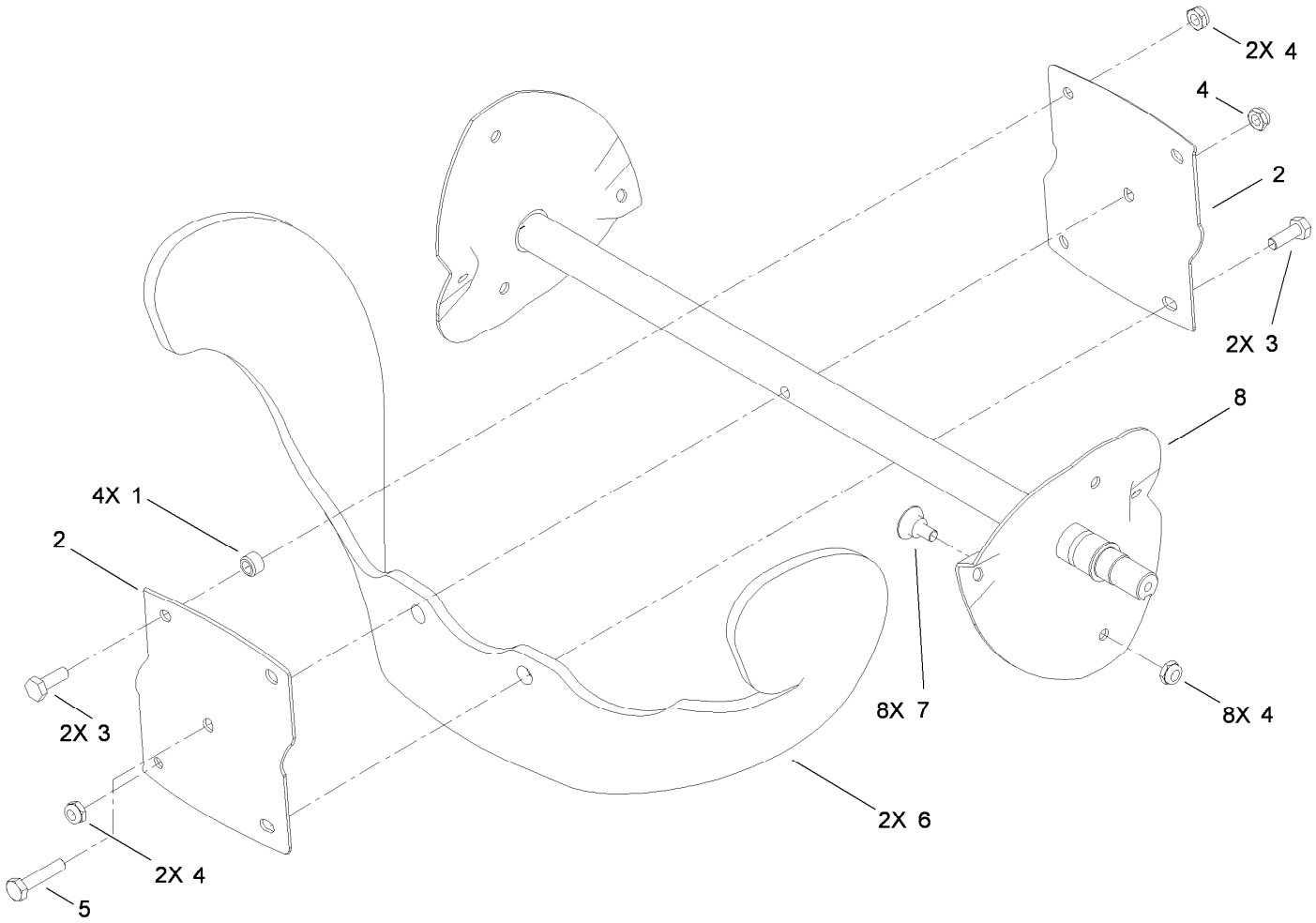


# Rotor Assembly

| *Ref.* | *Part Number* | *Qty.* | *Description* |
|---|---|---|---|
| 1 | 55-9370 | 4 | Spacer-Blade, Rotor |
| 2 | 66-6600-03 | 2 | Half-Rotor |
| 3 | 321-4 | 4 | Screw-HH |
| 4 | 3296-56 | 13 | Nut-Lock, NI |
| 5 | 321-8 | 1 | Screw-HH |
| 6 | 99-9313 | 2 | Blade-Rotor |
| 7 | 84-1971 | 8 | Screw |
| 8 | 108-4894-03 | 1 | Rotor |

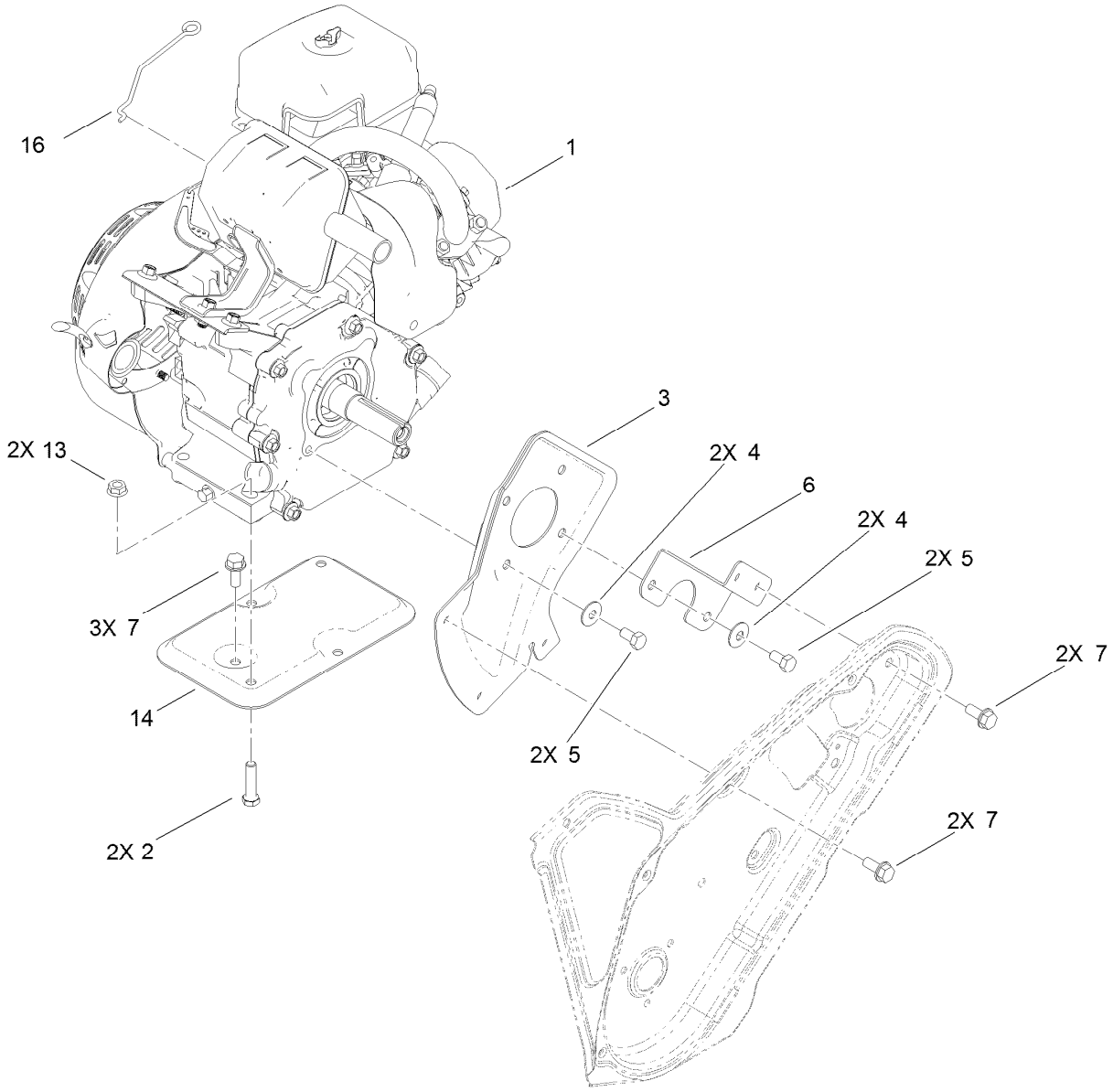


# Engine Assembly

| *Ref.* | *Part Number* | *Qty.* | *Description* |
|---|---|---|---|
| 1 | 119-1943 | 1 | Engine-Lc168Fs-1 |
| 2 | 322-17 | 2 | Screw-HH |
| 3 | 108-4892-03 | 1 | Plate-Engine, PTO |
| 4 | 3290-456 | 4 | Washer-Belleville |
| 5 | 33114-016 | 4 | Screw-HH |
| 6 | 110-9354-03 | 1 | Support-Engine, Side |
| 7 | 32144-11 | 7 | Screw-HWHTF |
| 13 | 32128-20 | 2 | Nut-HF |
| 14 | 117-6037-03 | 1 | Support-Engine |
| 16 | 117-6040 | 1 | Link-Knob, Choke |

# Engine Assembly No. 1

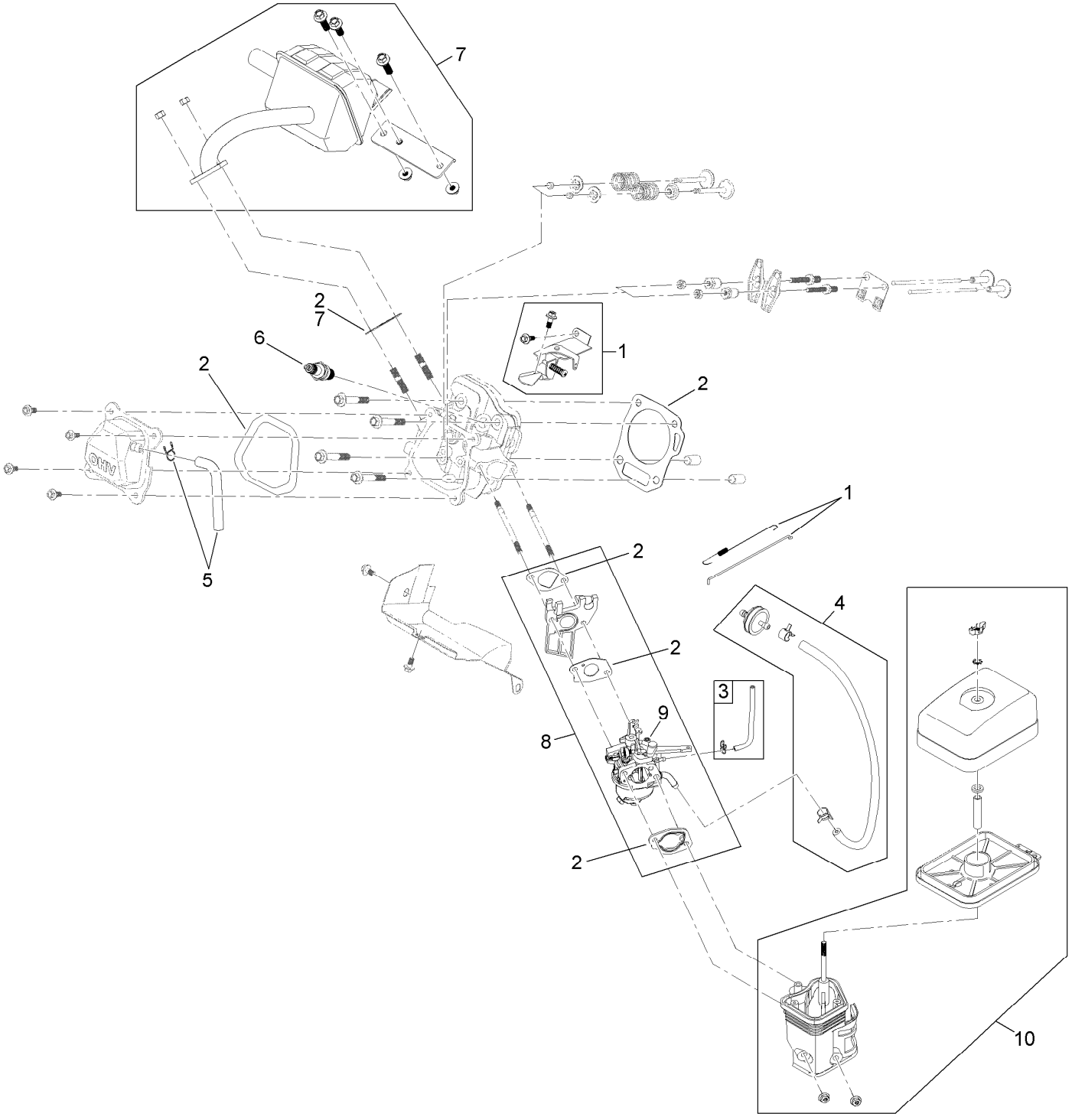

# Engine Assembly No. 1 (continued)

| Ref. | Part Number | Qty. | Description |
|---|---|---|---|
| 1 | 119-1957 | 1 | Governor Kit |
| 2 | 119-1955 | 1 | Gasket And Seal Kit |
| 3 | 119-1949 | 1 | Primer Line Kit |
| 4 | 120-4402 | 1 | Fuel Line Kit |
| 5 | 119-1921 | 1 | Breather Tube Kit |
| 6 | 119-1901 | 1 | Spark Plug |
| 7 | 119-1954 | 1 | Muffler Kit |
| 8 | 120-4418 | 1 | Complete Carburetor Service Kit |
| 9 | 121-0082 | 1 | Carburetor ASM |
| 10 | 119-1950 | 1 | Heater Box Kit |

# Engine Assembly No. 2

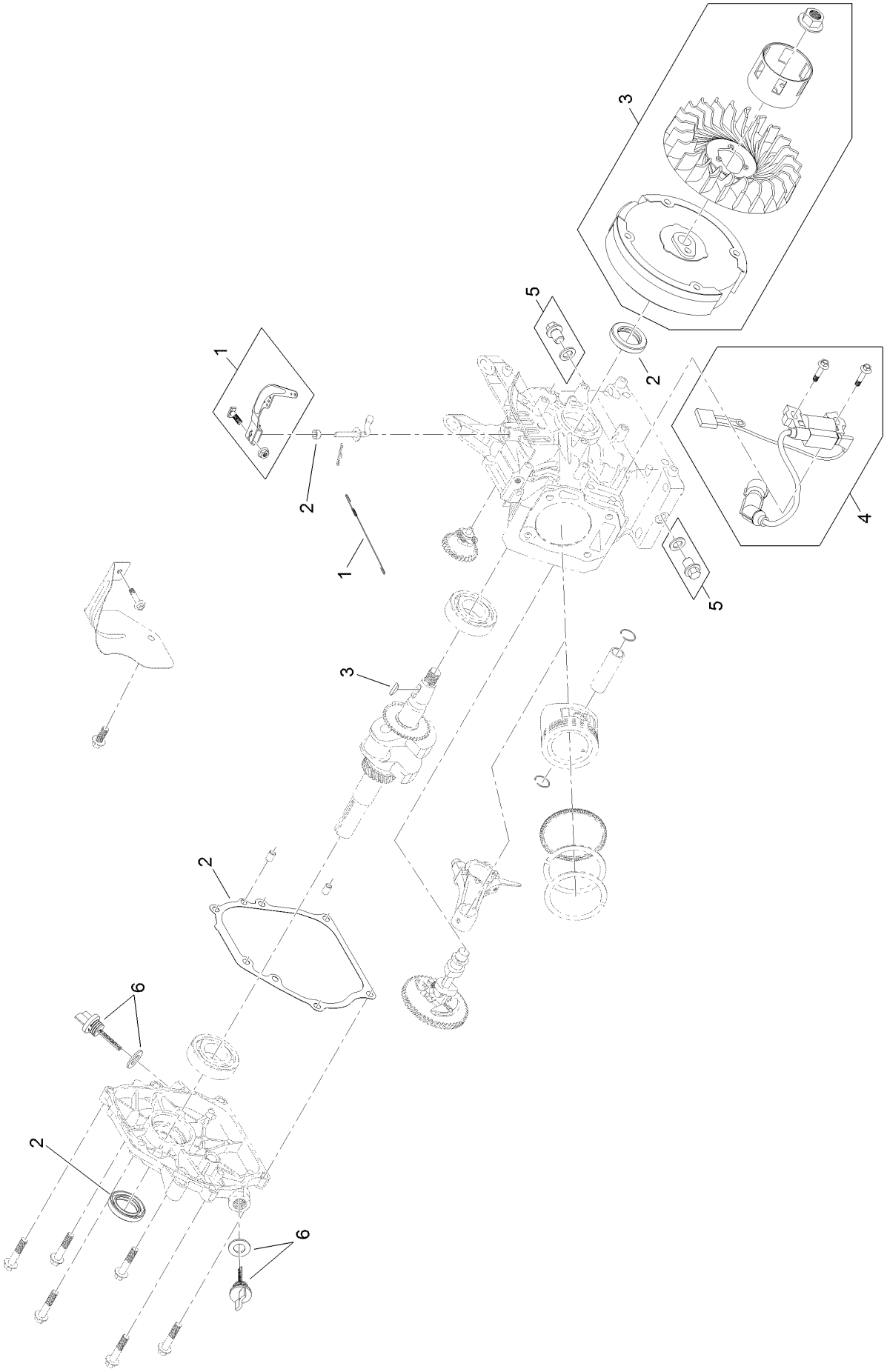

# Engine Assembly No. 2 (continued)

| Ref. | Part Number | Qty. | Description |
|---|---|---|---|
| 1 | 119-1957 | 1 | Governor Kit |
| 2 | 119-1955 | 1 | Gasket And Seal Kit |
| 3 | 119-1963 | 1 | Flywheel Kit |
| 4 | 119-1959 | 1 | Ignition Kit |
| 5 | 119-1923 | 2 | Drain Plug Kit |
| 6 | 119-1944 | 2 | Dipstick And O-Ring Kit |

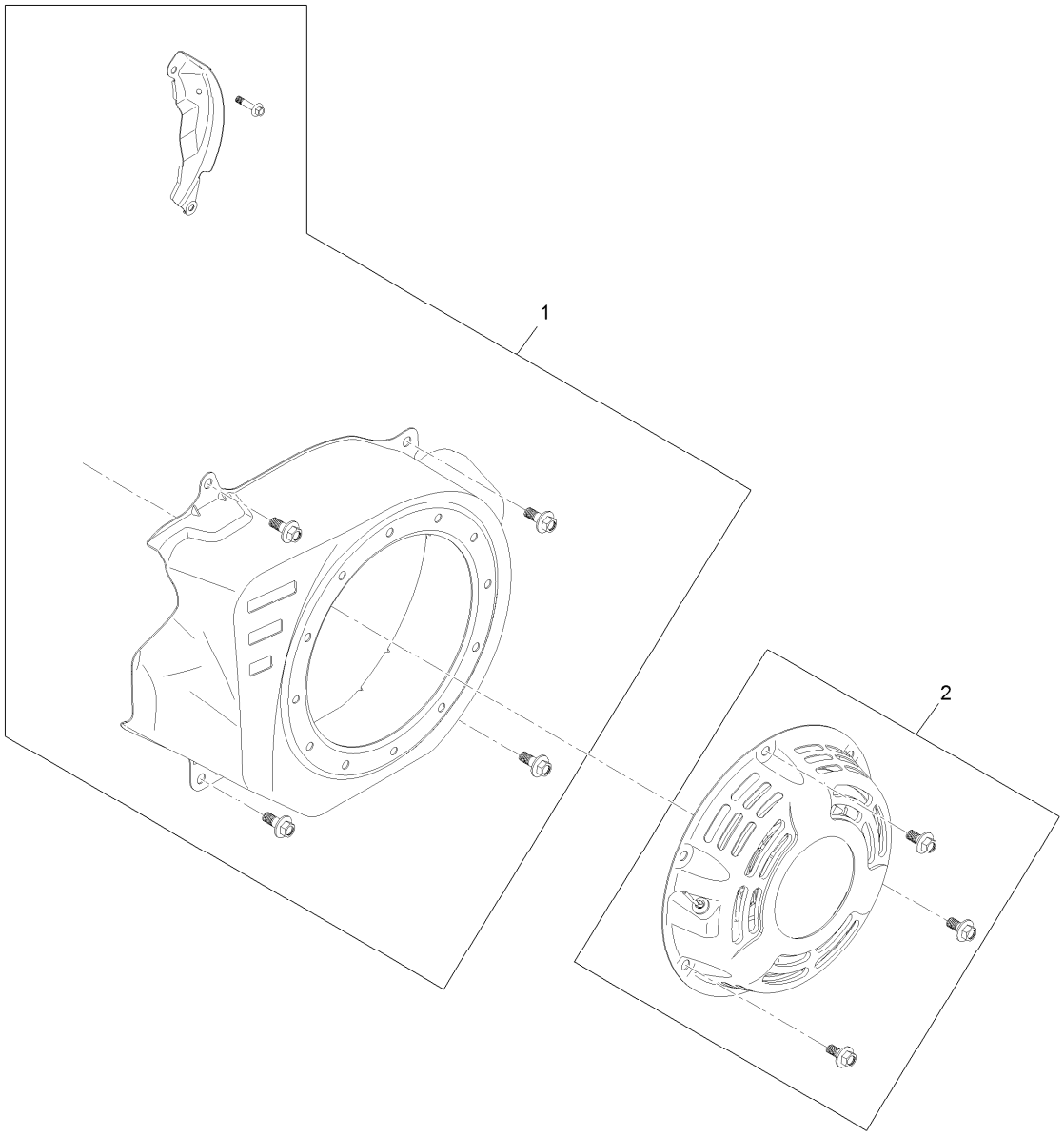


# Engine Assembly No. 3

| *Ref.* | *Part Number* | *Qty.* | *Description* |
|---|---|---|---|
| 1 | 119-1947 | 1 | Blower Shroud Kit |
| 2 | 119-1945 | 1 | Recoil Kit |

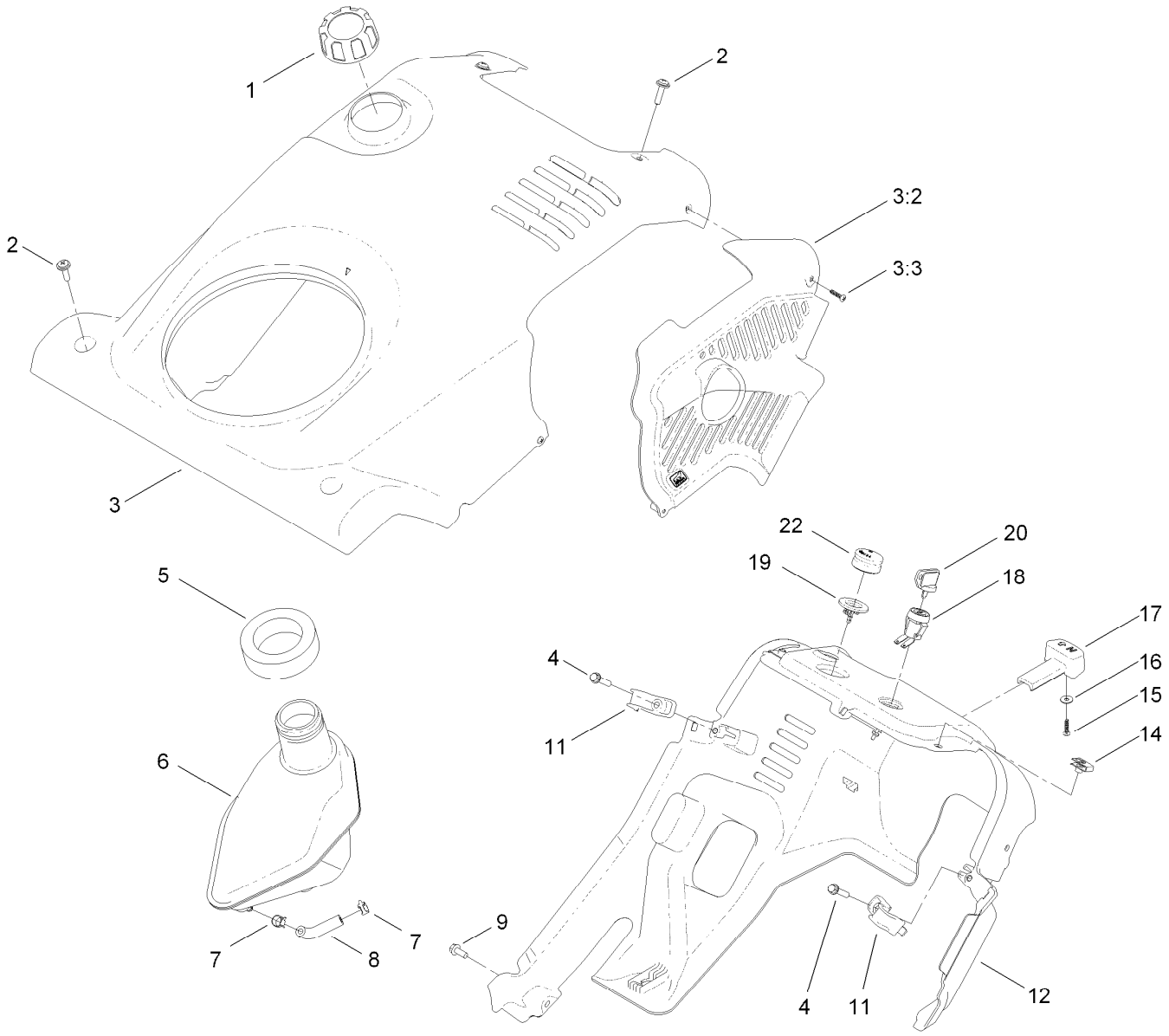


# Shroud Assembly

| Ref. | Part Number | Qty. | Description |
|---|---|---|---|
| 1 | 114-3764 | 1 | 4-Cycle Gas Cap ASM |
| 2 | 110-9361 | 4 | Screw-PPH, Sems |
| 3 | 120-0100 | 1 | Shroud ASM |
| 3:2 | 117-6035 | 1 | Baffle-Exhaust, 4-Cycle |
| 3:3 | 94-4496 | 2 | Screw-PPH |
| 4 | 46-8092 | 2 | Screw-Plastite |
| 5 | 114-3773 | 1 | Seal-Tank |
| 6 | 120-9848 | 1 | Tank-Fuel, Gas |
| 7 | 2412-98 | 2 | Clamp-Hose |
| 8 | 114-3765 | 1 | Hose-Fuel |
| 9 | 32144-85 | 1 | Screw-HWH |

| Ref. | Part Number | Qty. | Description |
|---|---|---|---|
| 11 | 108-4947 | 2 | Clip-Shroud |
| 12 | 117-6036 | 1 | Shroud-Lower |
| 14 | 107069 | 2 | Clip |
| 15 | 94-4496 | 1 | Screw-PPH |
| 16 | 3256-49 | 1 | Washer-Flat |
| 17 | 117-9100 | 1 | Knob-Choke |
| 18 | 40-5940 | 1 | Switch |
| 19 | 44-2750 | 1 | Body-Primer |
| 20 | 63-8360 | 1 | Key-Ignition (W/Shield) |
| 22 | 66-7460 | 1 | Bulb-Primer |

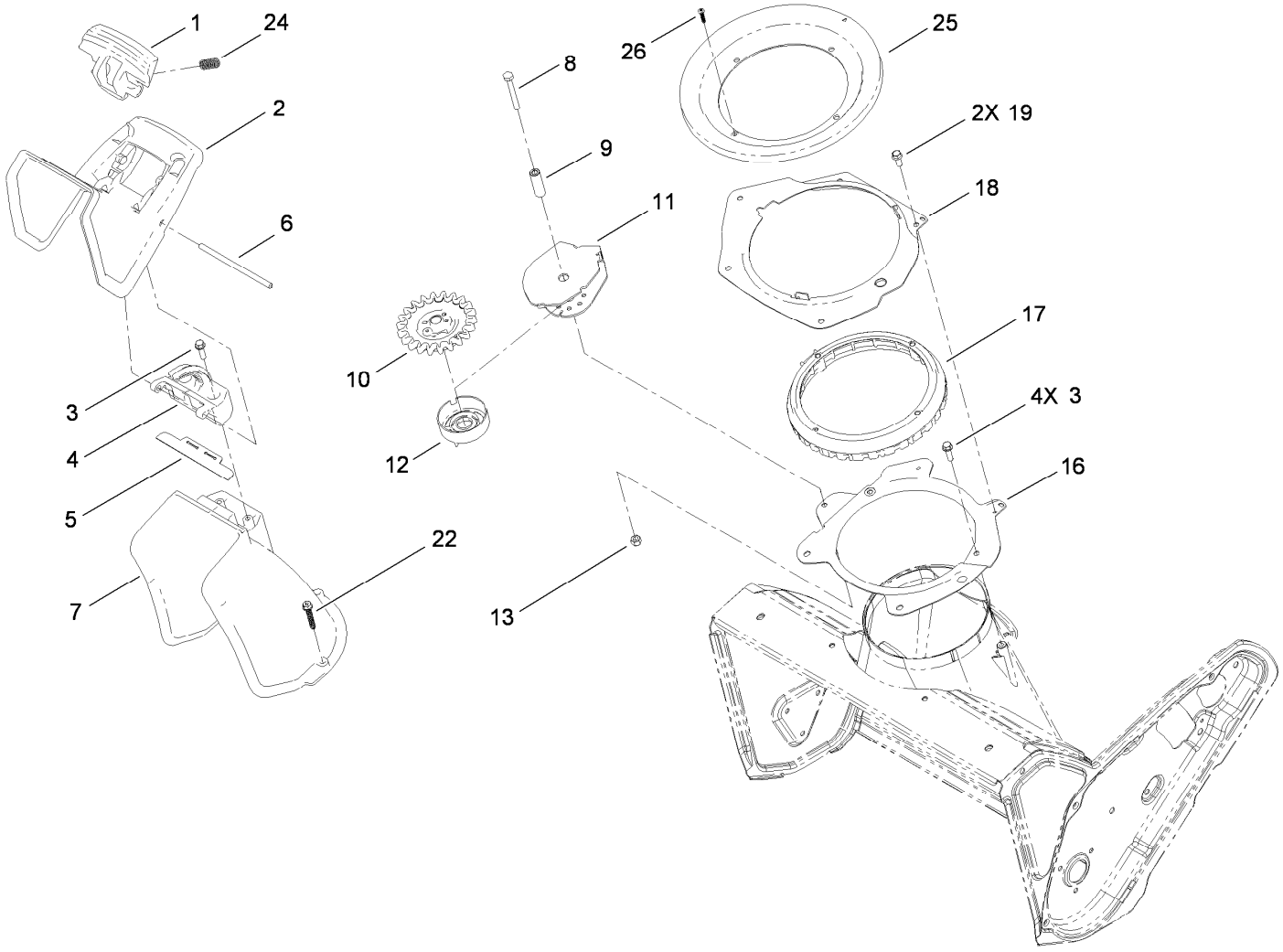


# Chute Control Assembly

| Ref. | Part Number | Qty. | Description |
|---|---|---|---|
| 1 | 108-4941 | 1 | Trigger-Deflector |
| 2 | 117-9121 | 1 | Deflector-Chute, Ce |
| 3 | 46-8091 | 6 | Screw-HWH |
| 4 | 108-4942 | 1 | Hinge-Ratchet, Deflector |
| 5 | 114-3790 | 1 | Seal-Deflector |
| 6 | 110-9368 | 1 | Pin-Hinge, Deflector |
| 7 | 108-4939 | 1 | Chute |
| 8 | 321-18 | 1 | Screw-HH |
| 9 | 108-4877 | 1 | Spacer-Sleeve, Pinion |
| 10 | 108-4875 | 1 | Pinion-Gear |
| 11 | 108-4900-03 | 1 | Bracket-Pinion |

| Ref. | Part Number | Qty. | Description |
|---|---|---|---|
| 12 | 114-3792 | 1 | Retainer-Cable |
| 13 | 3296-42 | 1 | Nut-Lock, NI |
| 16 | 108-4883-03 | 1 | Ring-Support, Chute |
| 17 | 108-4882 | 1 | Ring-Chute, Gear |
| 18 | 108-4874-03 | 1 | Retainer-Ring, Chute |
| 19 | 32144-85 | 2 | Screw-HWH |
| 22 | 108-4946 | 3 | Screw-Plastite |
| 24 | 110-9360 | 2 | Spring-Compression |
| 25 | 114-3772 | 1 | Seal-Ring, Chute |
| 26 | 94-4496 | 1 | Screw-PPH |

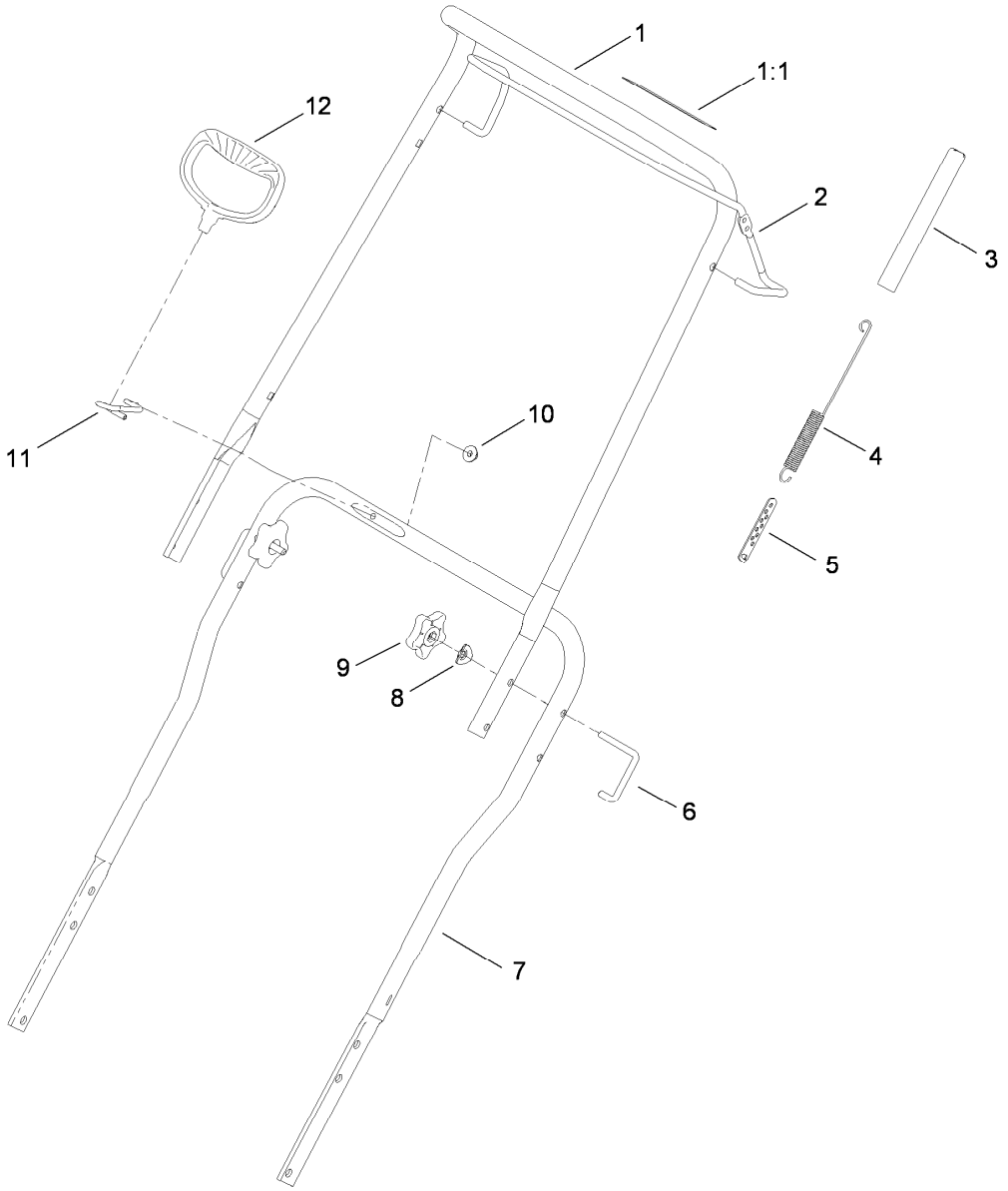


# Upper Handle Assembly

| *Ref.* | *Part Number* | *Qty.* | *Description* |
|---|---|---|---|
| 1 | 114-3768 | 1 | Upper Handle ASM |
| 1:1 | 94-2577 | 1 | Decal-Drive, Rotor |
| 2 | 114-3780-03 | 1 | Bail-Control |
| 3 | 114-3796 | 1 | Cover-Spring |
| 4 | 108-4920 | 1 | Spring-Extension |
| 5 | 71-5330 | 1 | Adjuster-Cable, Clutch |
| 6 | 108-4887 | 2 | Lock-Handle |
| 7 | 108-4944-03 | 1 | Handle-Lower |
| 8 | 107-3844 | 2 | Washer |
| 9 | 114-3779 | 2 | Knob-Handle |
| 10 | 114-3778 | 1 | Nut-Lock, NI |
| 11 | 108-4949 | 1 | Guide-Rope |
| 12 | 117-9104 | 1 | Handle-Recoil, Blue |

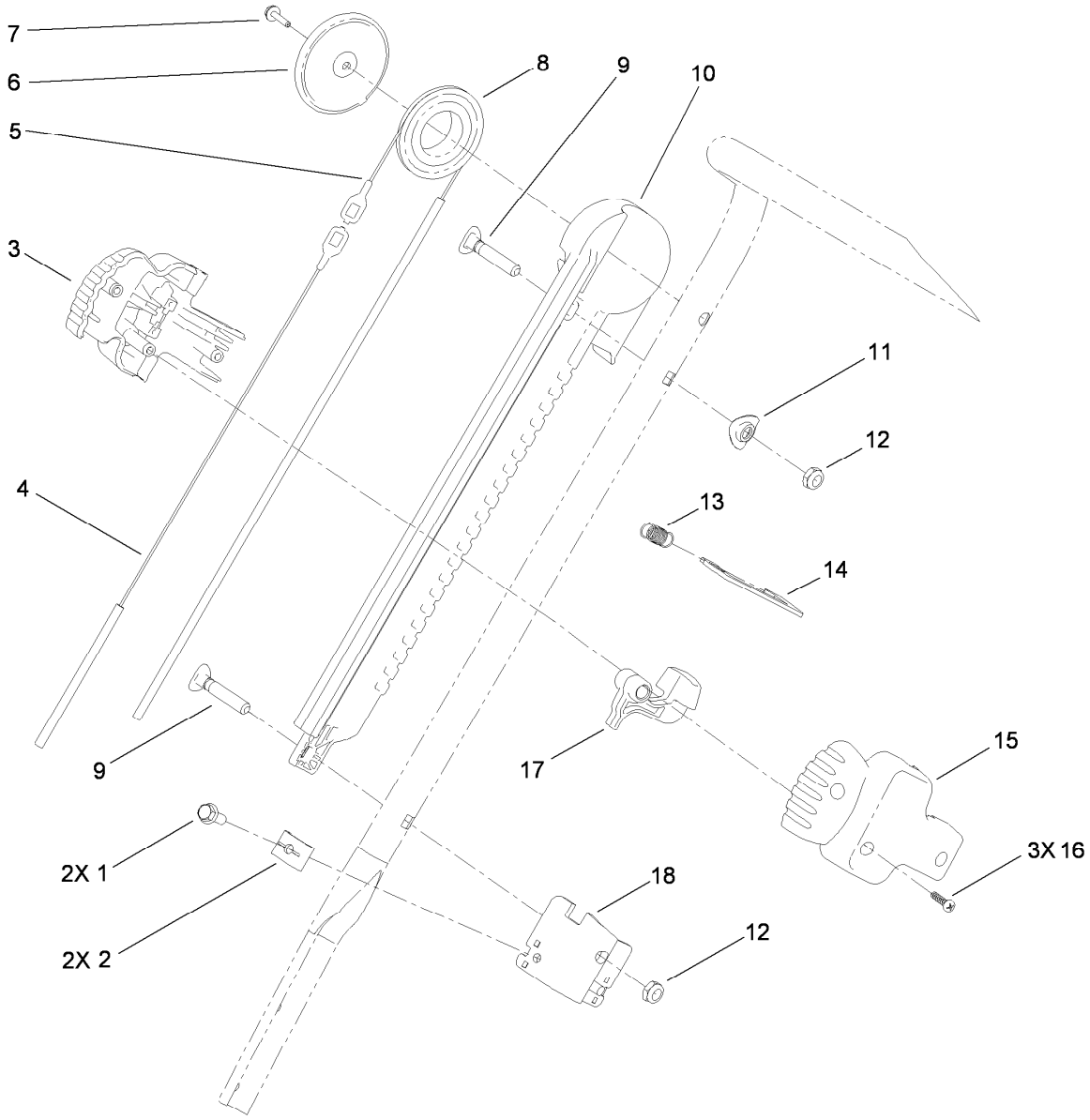


# Handle Chute Control Assembly

| Ref. | Part Number | Qty. | Description |
|---|---|---|---|
| 1 | 32144-85 | 2 | Screw-HWH |
| 2 | 106-7297 | 2 | Clamp-Cable |
| 3 | 108-4912 | 1 | Handle-Slider, RH |
| 4 | 108-4897 | 1 | Cable-Chute, Short |
| 5 | 108-4898 | 1 | Cable-Chute, Long |
| 6 | 108-4931 | 1 | Cover-Pulley |
| 7 | 98-1375 | 1 | Screw-HWH |
| 8 | 108-4907 | 1 | Pulley-Slider |
| 9 | 107-3018 | 2 | Screw-Handle |

| Ref. | Part Number | Qty. | Description |
|---|---|---|---|
| 10 | 108-4899 | 1 | Track-Slider |
| 11 | 107-3844 | 1 | Washer |
| 12 | 3296-47 | 2 | Nut-Lock, NI |
| 13 | 108-4914 | 1 | Spring-Trigger |
| 14 | 108-4908 | 1 | Plate-Lock, Chute |
| 15 | 108-4911 | 1 | Handle-Slider, LH |
| 16 | 94-4496 | 3 | Screw-PPH |
| 17 | 108-4913 | 1 | Trigger |
| 18 | 108-4909 | 1 | Bracket-Cable |

# Attachments and Accessories

## For 38567 CCR 6053 R Quick Clear Snowthrower

| Product Name | Model/Part |
| --- | --- |
| 5W30 Winter Oil, Case of 24 20-Ounce Bottles | 38908 |

## Notes:

## Notes:




**Count on it.**