Form No. 3373-710 Rev A

Power Max 826 O/OE Snowthrower

Model No. 38597—Serial No. 313000001 and Up

Model No. 38629—Serial No. 313000001 and Up

Operator's Manual

Introduction

This machine is intended to be used by residential homeowners or professional, hired operators. It is designed primarily for removing snow from paved surfaces, such as driveways and sidewalks, and other surfaces for traffic on residential or commercial properties. It is not designed for removing materials other than snow.

Read this information carefully to learn how to operate and maintain your machine properly and to avoid injury and machine damage. You are responsible for operating the machine properly and safely.

You may contact Toro directly at www.Toro.com for machine and accessory information, help finding a dealer, or to register your machine.

Whenever you need service, genuine Toro parts, or additional information, contact an Authorized Service Dealer or Toro Customer Service and have the model and serial numbers of your machine ready. Figure 1 identifies the location of the model and serial numbers on the machine. Write the numbers in the space provided.

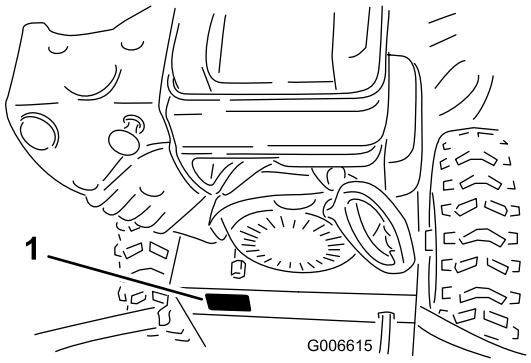

Figure 1

1. Model and serial number location

Model No. _____

Serial No. _____

This manual identifies potential hazards and has safety messages identified by the safety alert symbol (Figure 2), which signals a hazard that may cause serious injury or death if you do not follow the recommended precautions.



Figure 2

1. Safety alert symbol

This manual uses 2 words to highlight information. **Important** calls attention to special mechanical information and **Note** emphasizes general information worthy of special attention.

Replacement Engine Owner's Manuals may be ordered through the engine manufacturer.

Contents

Introduction 1
Safety 3
- Training 3
- Preparation 3
- Operation 3
- Maintenance and Storage 4
- Toro Snowthrower Safety 4
- Sound Pressure 4
- Sound Power 4
- Vibration 4
- Safety and Instructional Decals 4

Setup 7
- 1 Installing the Upper Handle 7
- 2 Installing the Traction Control Linkage 8
- 3 Installing the Chute Control Rod 9
- 4 Filling the Engine with Oil 10
- 5 Checking the Tire Pressure 10
- 6 Checking the Skids 10
- 7 Checking the Traction Drive Operation 10

Product Overview 12
Operation 12
- Freewheeling or Using the Self-propel Drive 12
- Filling the Fuel Tank 13
- Starting the Engine 14
- Stopping the Engine 15
- Operating the Traction Drive 16
- Operating the Speed Selector 16
- Operating the Auger/Impeller Drive 16

© 2012—The Toro® Company
8111 Lyndale Avenue South
Bloomington, MN 55420

Register at www.Toro.com.

CE

Original Instructions (EN)
Printed in the USA
All Rights Reserved

3373-710 A

Operating the Quick Stick®.....17
Unclogging the Discharge Chute 17
Preventing Freeze-up.....17
Operating Tips 18
Maintenance 18
Recommended Maintenance Schedule(s) 18
Preparing for Maintenance.....20
Checking the Engine Oil Level 20
Checking and Adjusting the Skids and Scraper.....20
Checking and Adjusting the Traction Cable 20
Checking the Auger Gearbox Oil Level.....21
Changing the Engine Oil 21
Adjusting the Discharge Chute Latch 22
Replacing the Drive Belts.....23
Storage 23
Preparing the Machine for Storage 23
Removing the Machine from Storage.....24
Troubleshooting 25

Safety

This machine meets or exceeds the ISO standard 8437 in effect at the time of production.

Read and understand the contents of this manual before the engine is ever started.

⚠This is the safety alert symbol. It is used to alert you to potential personal injury hazards. Obey all safety messages that follow this symbol to avoid possible injury or death.

Improperly using or maintaining this machine could result in injury or death. To reduce this potential, comply with the following safety instructions.

Training

- Read the operating and service instruction manual carefully. Be thoroughly familiar with the controls and the proper use of the machine. Know how to stop the machine and disengage the controls quickly.
- Never allow children to operate the machine. Never allow adults to operate the machine without proper instruction.
- Keep the area of operation clear of all persons, particularly small children, and pets.
- Exercise caution to avoid slipping or falling, especially when operating in reverse.

Preparation

- Thoroughly inspect the area where the machine is to be used and remove all doormats, sleds, boards, wires, and other foreign objects.
- Disengage all clutches and shift into neutral before starting the engine.
- Do not operate the machine without wearing adequate winter garments. Wear footwear which will improve footing on slippery surfaces.
- Handle fuel with care; it is highly flammable.
  - Use an approved fuel container.
  - Never add fuel to a running or hot engine.
  - Fill fuel tank outdoors with extreme care. Never fill fuel tank indoors.
  - Replace gasoline caps securely and wipe up spilled fuel.
- Adjust the collector housing height to clear gravel or crushed rock surface.
- Never attempt to make any adjustments while the engine is running (except where specifically recommended by manufacturer).
- Let engine and machine adjust to outdoor temperatures before starting to clear snow.
- The operation of any powered machine can result in foreign objects being thrown into the eyes. Always wear safety glasses or eye shields during operation or while performing an adjustment or repair.

Operation

- Do not put hands or feet near or under rotating parts. Keep clear of the discharge opening at all times.
- Exercise extreme caution when operating on or crossing gravel drives, walks, or roads. Stay alert for hidden hazards or traffic.
- After striking a foreign object, stop the engine, remove the wire from the spark-plug, thoroughly inspect the machine for any damage, and repair the damage before restarting and operating the machine.
- If the machine should start to vibrate abnormally, stop the engine and check immediately for the cause. Vibration is generally a warning of trouble.
- Stop the engine whenever you leave the operating position, before unclogging the collector/impeller housing or discharge guide, and when making any repairs, adjustments, or inspections.
- When cleaning, repairing, or inspecting, make certain the collector/impeller and all moving parts have stopped. Disconnect the spark-plug wire, and keep the wire away from the plug to prevent accidental starting.
- Do not run the engine indoors, except when starting it and for moving the machine in or out of the building. Open the outside doors; exhaust fumes are dangerous.
- Do not clear snow across the face of slopes. Exercise extreme caution when changing direction on slopes. Do not attempt to clear steep slopes.
- Never operate the machine without proper guards, plates, or other safety protective devices in place.
- Never operate the machine near glass enclosures, automobiles, window wells, drop-offs, etc. without proper adjustment of the snow discharge angle. Keep children and pets away.
- Do not overload the machine capacity by attempting to clear snow at too fast a rate.
- Never operate the machine at high transport speeds on slippery surfaces. Use care when reversing.
- Never direct discharge at bystanders or allow anyone in front of the machine.
- Disengage power to the collector/impeller when machine is transported or not in use.
- Use only attachments and accessories approved by the manufacturer of machine (such as wheel weights, counterweights, cabs, etc.).
- Never operate the machine without good visibility or light. Always be sure of your footing, and keep a firm hold on the handles. Walk; never run.

- Never operate the machine without good visibility or light.
- Take all possible precautions when leaving the machine unattended. Shift into neutral, set the parking brake, stop the engine and remove the key.

Maintenance and Storage

- Check all fasteners at frequent intervals for proper tightness to be sure the machine is in safe working condition.
- Never store the machine with fuel in the fuel tank inside a building where ignition sources are present such as hot water and space heaters, clothes dryers, etc. Allow the engine to cool before storing in any enclosure.
- Always refer to owner's guide instructions for important details if the machine is to be stored for an extended period.
- Maintain or replace safety and instructions labels, as necessary.
- Run the machine a few minutes after throwing snow to prevent freeze-up of the collector/impeller.

Toro Snowthrower Safety

The following list contains safety information specific to Toro products or other safety information that you must know.

- **Rotating rotor blades can injure fingers or hands.** Stay behind the handles and away from the discharge opening while operating the machine. **Keep your face, hands, feet, and any other part of your body or clothing away from moving or rotating parts.**
- Before adjusting, cleaning, repairing, and inspecting the machine, and before unclogging the discharge chute, **stop the engine, remove the key, and wait for all moving parts to stop.**
- Use the snow cleanout tool, **not your hands**, to remove obstructions from the discharge chute.
- **Before** leaving the operating position, stop the engine, remove the key, and wait for all moving parts to stop.
- Do not wear loose-fitting clothing that could get caught in moving parts.
- If a shield, safety device, or decal is damaged, illegible, or lost, repair or replace it before beginning operation. Also, tighten any loose fasteners.
- **Do not** smoke while handling gasoline.
- **Do not** use the machine on a roof.
- Do not touch the engine while it is running or soon after it has stopped because the engine may be hot enough to cause a burn.
- Perform only those maintenance instructions described in this manual. Before performing any maintenance, service, or adjustment, stop the engine, remove the key, and disconnect the wire from the spark plug. If major repairs are ever needed, contact an Authorized Service Dealer.
- Do not change the governor settings on the engine.
- When storing the machine for more than 30 days, drain the fuel from the fuel tank to prevent a potential hazard. Store fuel in an approved fuel container. Remove the key from the ignition switch before storing the machine.
- Purchase only genuine Toro replacement parts and accessories.

Sound Pressure

This machine has a sound pressure level at the operator's ear of 87 dBA, which includes an Uncertainty Value (K) of 1 dBA. The sound pressure level was determined according to the procedures outlined in EN ISO 11201.

Sound Power

This machine has a guaranteed sound power level of 102 dBA, which includes an Uncertainty Value (K) of 2 dBA. The sound power level was determined according to the procedures outlined in EN ISO 3744.

Vibration

Measured vibration level for the left hand = 3.4 m/s^2.

Measured vibration level for the right hand = 4.5 m/s^2.

Uncertainty Value (K) = 2.3 m/s^2.

The measured values were determined according to the procedures outlined in EN ISO 20643.

Safety and Instructional Decals

Important: Safety and instruction decals are located near areas of potential danger. Replace damaged decals.

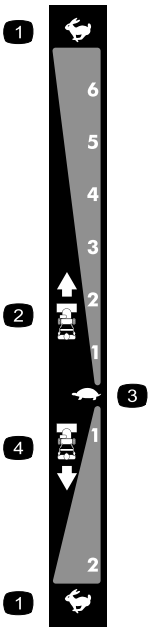

106-4525

Reorder part no. 112-6633

1. Fast
2. Forward speeds
3. Slow
4. Reverse speeds



107-3040

1. Cutting dismemberment, impeller and cutting dismemberment, auger hazards—keep bystanders a safe distance from the machine.

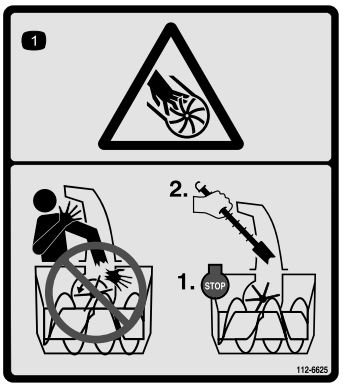

112-6625

Reorder part no. 112-6629

1. Cutting/dismemberment hazard, impeller—do not place your hand in the chute; stop the engine before leaving the operator's position, use the tool to clear the chute.

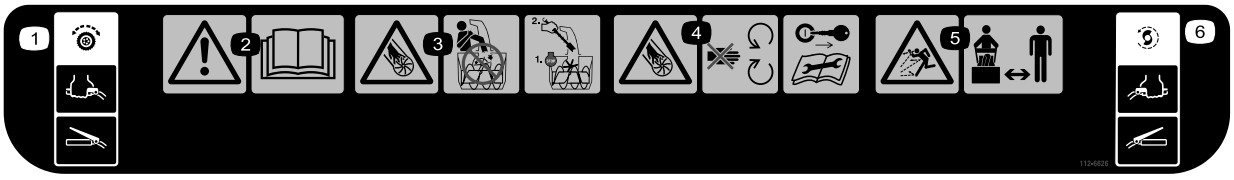

112-6626

1. Traction drive—squeeze the lever to engage; release the lever to disengage.
2. Warning—read the *Operator's Manual.*
3. Cutting/dismemberment hazard, impeller—do not place your hand in the chute; stop the engine before leaving the operator's position, use the tool clear the chute.
4. Cutting/dismemberment hazard, impeller and auger—stay away from moving parts, keep all guards and shields in place; remove the ignition key and read the instructions before servicing or performing maintenance.
5. Thrown object hazard—keep bystanders a safe distance from the machine.
6. Auger/impeller drive—squeeze the lever to engage; release the lever to disengage.



Briggs & Stratton Part No. 273676

1. Stop
2. Slow
3. Fast



Briggs & Stratton Part No. 275949

1. Choke on (Choke)
2. Choke off (Run)



Briggs & Stratton Part No. 276925

1. Warning—read the *Operator's Manual.*
2. Warning—fire hazard.
3. Warning—toxic gas inhalation hazard.
4. Warning—hot surface/burn hazard.

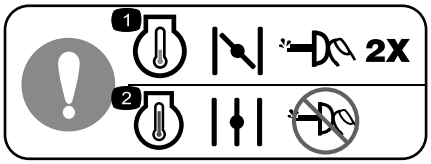

Briggs & Stratton Part No. 277566

1. When starting a cold engine, close the choke and press the primer two times.
2. When starting a warm engine, open the choke and do not press the primer.

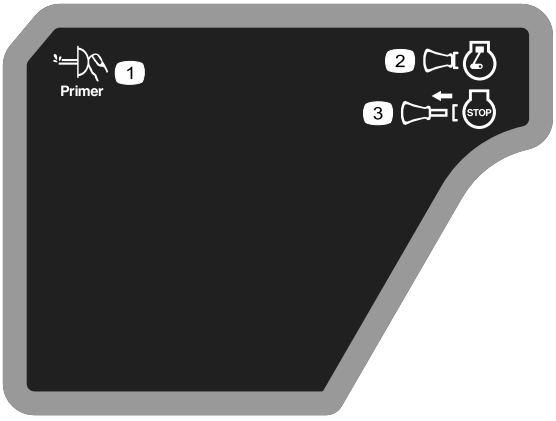

Briggs & Stratton Part No. 277588

1. Primer
2. Ignition key in (Engine—Run)
3. Ignition key out (Engine—Stop)



Briggs & Stratton Part No. 278866

1. Fuel—On
2. Fuel—Off

Setup

Loose Parts

Use the chart below to verify that all parts have been shipped.

Procedure	Description	Qty.	Use
1	Handle bolts Curved washers Locknuts	4 4 4	Install the upper handle.
2	No parts required	–	Install the traction control linkage.
3	Carriage bolts Locknuts	2 2	Install the chute control rod.
4	No parts required	–	Fill the engine with oil.
5	No parts required	–	Check the tire pressure.
6	No parts required	–	Check the skids.
7	No parts required	–	Check the operation of the traction drive.

1

Installing the Upper Handle

Parts needed for this procedure:

4	Handle bolts
4	Curved washers
4	Locknuts

Procedure

Note: Do not remove the rubber band on the cables until you have installed the upper handle.

1. Lift and rotate the upper handle and position it over the lower handle (Figure 3).

   Important: Route the cables attached to the Quick Stick inside the upper handle leg.

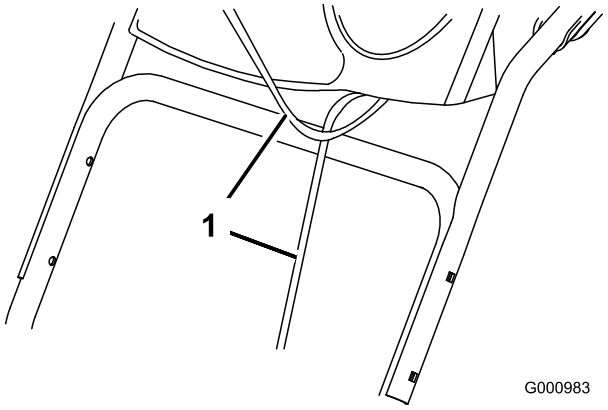

Figure 3

1. Cables

2. Secure the upper handle with 4 handle bolts, 4 curved washers, and 4 locknuts from the loose parts bag (Figure 4).

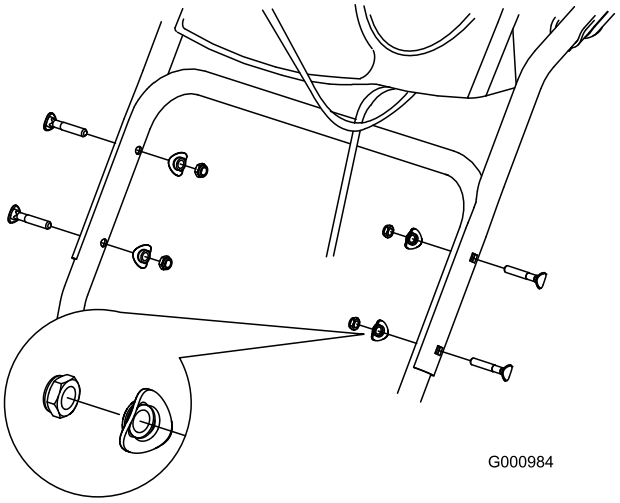

Figure 4

2

Installing the Traction Control Linkage

No Parts Required

Procedure

1. Remove the hairpin cotter and washer from the lower end of the speed control rod and insert the lower end of the rod into the lower link arm so that the bent end of the speed control rod faces rearward (Figure 5).

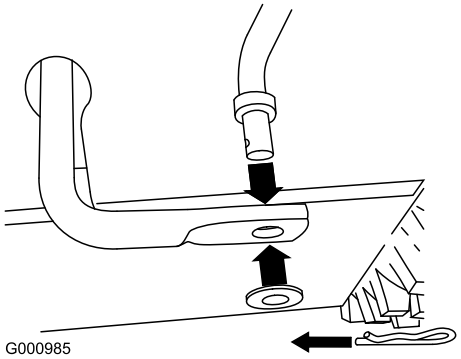

Figure 5

2. Secure the lower end of the speed control rod with the washer and hairpin cotter that you previously removed.
3. Remove the hairpin cotter and the outer washer from the trunnion on the upper end of the speed control rod (Figure 6).

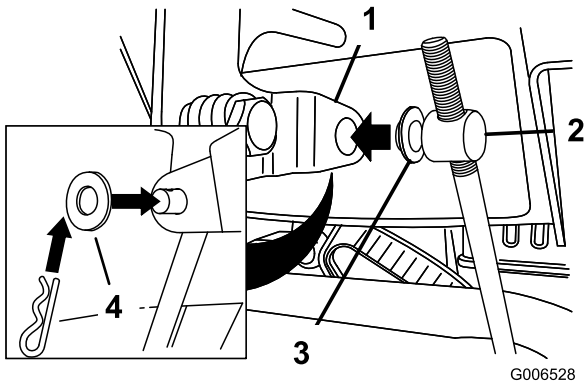

Figure 6

1. Speed selector lever
2. Trunnion
3. Inner washer
4. Outer washer

Note: To make installation easier, leave the flat washer on the trunnion (Figure 6).

4. Shift the speed selector lever into Position R2.
5. Rotate the lower link arm fully upward (counterclockwise) (Figure 7).

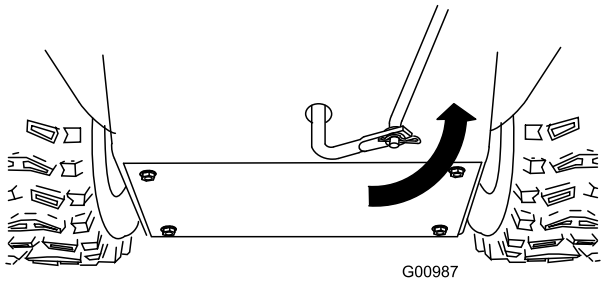

Figure 7

6. Lift up on the speed control rod and insert the trunnion into the hole in the speed selector lever (Figure 6).

Note: If the trunnion does not fit into the hole when you lift up on the speed control rod, rotate the trunnion upward or downward on the speed control rod until it fits.

7. Secure the trunnion and upper end of the speed control rod with the outer washer and a hairpin cotter you previously removed.

Note: For easier installation, look down through the opening in the speed selector (Figure 8).

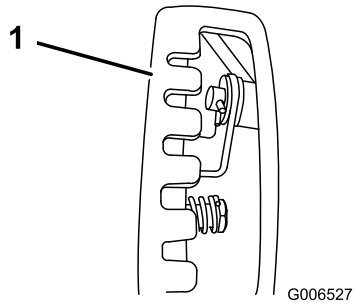

Figure 8

1. Speed selector

3

Installing the Chute Control Rod

Parts needed for this procedure:

2	Carriage bolts
2	Locknuts

Procedure

1. Unwrap the Quick Stick and rotate it so that it is upright and in the center.
2. Hold the blue trigger cap down and pull the lever fully rearward.

   Note: The discharge chute and deflector should face forward. If they do not, hold the blue trigger cap down (but do not move the Quick Stick) and rotate the discharge chute until they do.
3. Align the flattened back end of the long chute control rod with the flattened front end of the short rod that extends from the control panel so that they nest together (Figure 9).

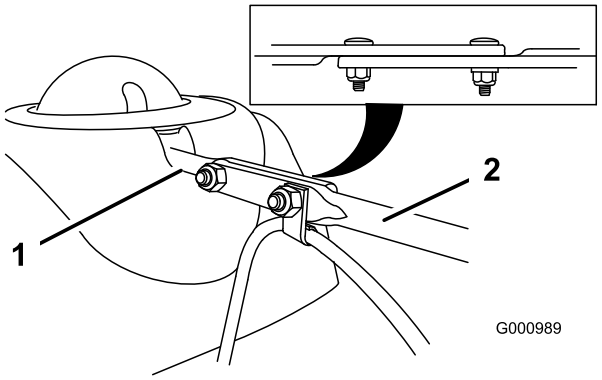

Figure 9

1. Short rod
2. Long chute control rod

4. Insert the front end of the rod into the opening in the back of the chute gear cover until it slides into the chute gear (Figure 10).

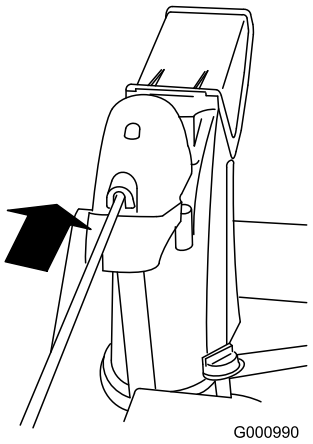

Figure 10

5. Align the holes in the nested ends of the rods and insert 2 carriage bolts (in the loose parts bag) through the short rod from the left side of the machine (from the operating position).
6. Insert the cable clip that supports the deflector cable onto the forward carriage bolt, and secure the carriage bolts with locknuts from the loose parts bag (Figure 11).

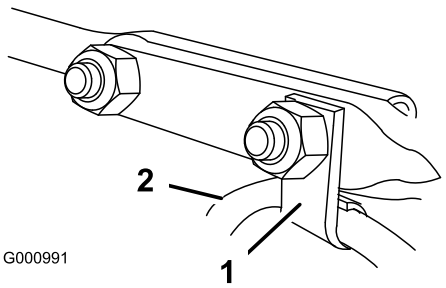

Figure 11

1. Cable clip
2. Deflector cable

7. Hold the blue trigger cap down and rotate the Quick Stick in a circle to ensure that the chute and deflector operate smoothly.

4

Filling the Engine with Oil

No Parts Required

Procedure

Your machine comes with oil in the engine crankcase.

Note: Before starting the engine, check the oil level and add oil if necessary.

Use automotive detergent oil with an API service classification of SF, SG, SH, SJ, SL, or higher. Refer to your engine owner's manual.

Use Figure 12 below to select the best oil viscosity for the outdoor temperature range expected:

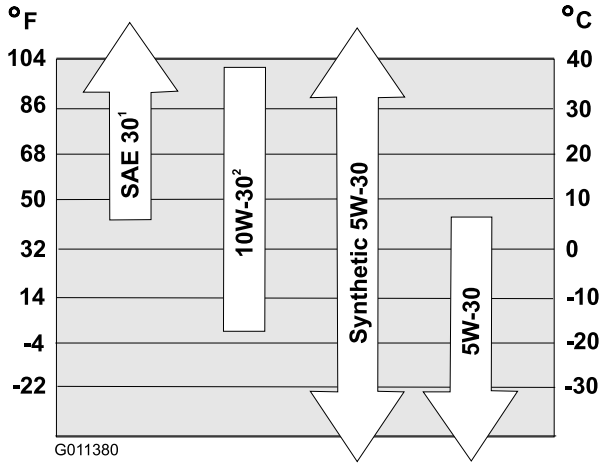

Figure 12

1. Using SAE 30 at outdoor temperatures below 40°F (4°C) will result in hard starting.
2. Using 10W-30 at outdoor temperatures above 80°F (27°C) may result in increased oil consumption; therefore, check the oil level more frequently in these circumstances.

Engine Oil Capacities

Model	Engine Oil Capacity
38597	18 to 20 oz. (0.53 to 0.59 l)
38629	

1. Remove the dipstick and **slowly** pour oil into the oil fill tube to raise the oil level to the Full mark on the dipstick. **Do not overfill** (Figure 13). Refer to Checking the Engine Oil Level in Maintenance.

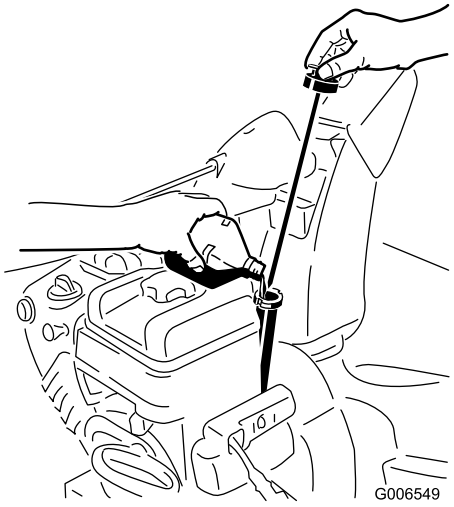

Figure 13

2. Install the dipstick securely.

   Note: Do not spill oil around the oil fill tube; oil could leak onto traction parts and cause the traction to slip.

5

Checking the Tire Pressure

No Parts Required

Procedure

The tires are overinflated at the factory for shipping. Reduce the pressure equally in both tires to between 17 and 20 psi (116 and 137 kPa).

6

Checking the Skids

No Parts Required

Procedure

Refer to Checking and Adjusting the Skids in Maintenance.

7

Checking the Traction Drive Operation

No Parts Required

Procedure

⚠ CAUTION

If the traction drive is not properly adjusted, the machine may move in the direction opposite of what you intended, causing injury and/or property damage.

Carefully check the traction drive and adjust it properly, if necessary.

1. Start the engine; refer to Starting the Engine.
2. Move the speed selector to Position R1; refer to Operating the Speed Selector.
3. Squeeze the left hand (traction) lever to the hand-grip (Figure 14).

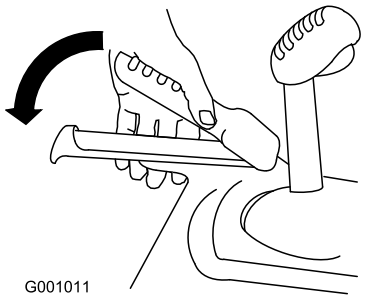

Figure 14

The machine should move rearward. If the machine does not move or moves forward, complete the following:

A. Release the traction lever and stop the engine.

B. Disconnect the trunnion from the speed selector lever (Figure 6).

C. Turn the trunnion downward (clockwise) on the speed control rod (Figure 6).

D. Connect the trunnion to the speed selector lever (Figure 6).

4. Release the traction lever.
5. Move the speed selector to the Position 1; refer to Operating the Speed Selector.
6. Squeeze the left hand (traction) lever to the hand-grip (Figure 14).

   The machine should move forward. If the machine does not move or moves rearward, complete the following:

   A. Release the traction lever and stop the engine.

   B. Disconnect the trunnion from the speed selector lever (Figure 6).

   C. Turn the trunnion upward (counterclockwise) on the speed control rod (Figure 6).

   D. Connect the trunnion to the speed selector lever (Figure 6).

7. If you made any adjustments, repeat this procedure until no adjustments are required.

Important: If the machine moves when the traction lever is in the released position, check the traction cable (refer to Checking and Adjusting the Traction Cable) or take the machine to an Authorized Service Dealer for service.

Product Overview

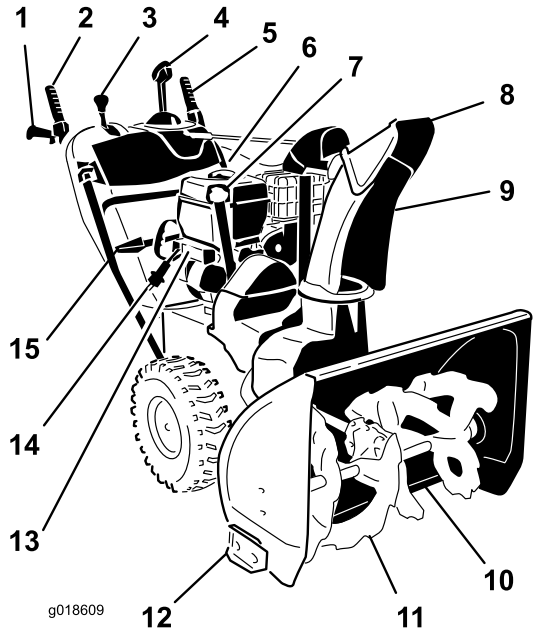

Figure 15

1. Hand-grip (2)
2. Auger/impeller lever
3. Speed selector lever
4. Quick Stick™ discharge chute control
5. Traction lever
6. Fuel tank cap
7. Engine oil fill tube/dipstick
8. Chute deflector
9. Discharge chute
10. Scraper
11. Auger
12. Skid (2)
13. Electric starter button (only 38629)
14. Electric starter plug (only 38629)
15. Snow cleanout tool

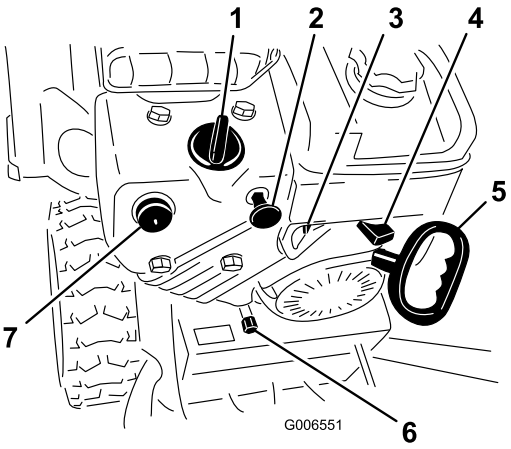

Figure 16

1. Choke
2. Ignition switch
3. Fuel shutoff valve
4. Throttle
5. Recoil starter
6. Oil drain plug
7. Primer

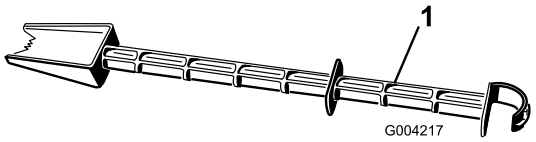

Figure 17

1. Snow cleanout tool (attached to the handle)

Operation

Note: Determine the left and right sides of the machine from the normal operating position.

Freewheeling or Using the Self-propel Drive

To disengage the self-propel drive (freewheel) when storing the snowthrower, slide the wheels inward and insert the axle pins through the outer axle holes, but not through the wheel hubs (Figure 18).

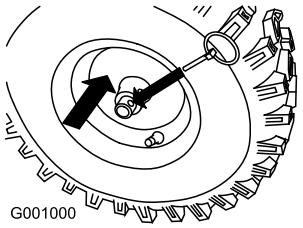

Figure 18

To engage the self-propel drive for operating the snowthrower, slide the wheels outward and insert the axle pins through the holes in the wheel hubs and the inner axle holes (Figure 19).

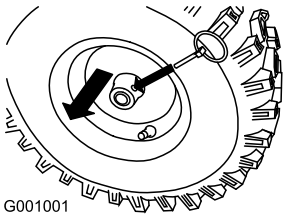

Figure 19

Filling the Fuel Tank

⚠ DANGER

Gasoline is extremely flammable and explosive. A fire or explosion from gasoline can burn you and others.

- **To prevent a static charge from igniting the gasoline, place the container and/or machine on the ground before filling, not in a vehicle or on an object.**
- **Fill the tank outdoors when the engine is cold. Wipe up spills.**
- **Do not handle gasoline when smoking or around an open flame or sparks.**
- **Store gasoline in an approved fuel container, out of the reach of children.**

- For best results, use only clean, fresh, unleaded gasoline with an octane rating of 87 or higher ((R+M)/2 rating method).
- Oxygenated fuel with up to 10% ethanol or 15% MTBE by volume is acceptable.
- **Do Not** use ethanol blends of gasoline (such as E15 or E85) with more than 10% ethanol by volume. Performance problems and/or engine damage may result which may not be covered under warranty.
- **Do Not** use gasoline containing methanol.
- **Do Not** store fuel either in the fuel tank or fuel containers over the winter unless a fuel stabilizer is used.
- **Do Not** add oil to gasoline.

Important: To reduce starting problems, add fuel stabilizer to the fuel all season, mixing it with gasoline less than 30 days old. *Do not add oil to the gasoline.*

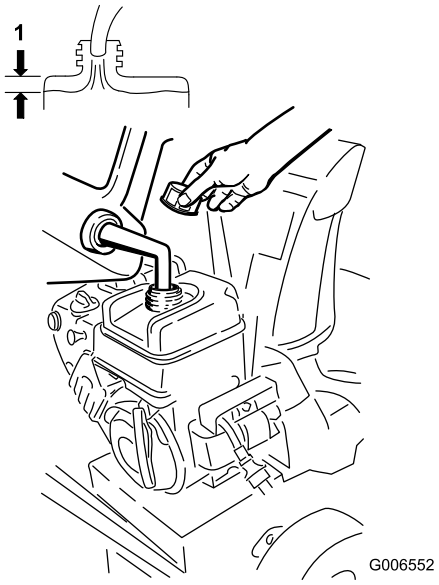

Figure 20

1. 1-1/2 inch (3.8 cm)

Starting the Engine

1. Check the engine oil level. Refer to Checking the Engine Oil Level in Maintenance.
2. Turn the fuel shutoff valve 1/4 turn counterclockwise to open it (Figure 21).

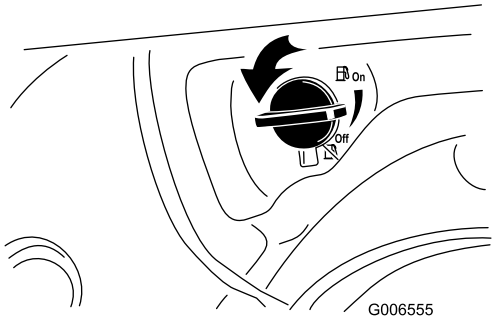

Figure 21

3. Insert the ignition key (Figure 22).

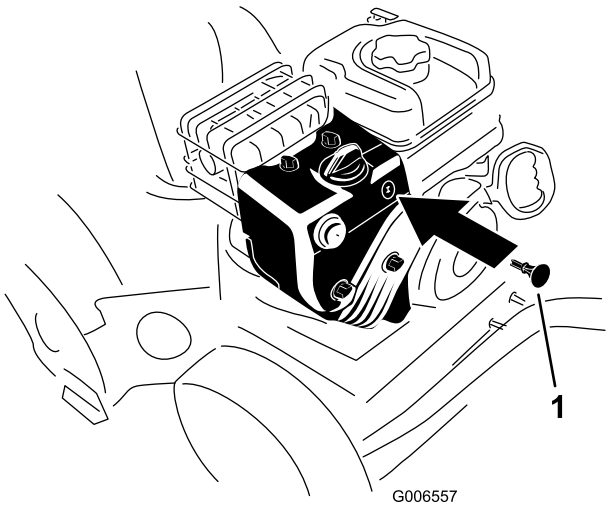

Figure 22

1. Ignition key

4. Firmly push in the primer with your thumb 2 times (15°F or -9°C or above) or 4 times (below 15°F or -9°C), holding the primer in for a second before releasing it each time (Figure 23).

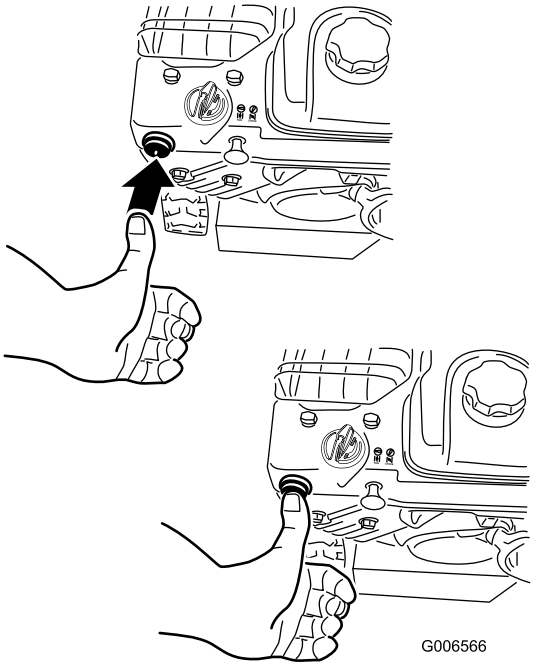

Figure 23

5. Rotate the choke to the Choke position (Figure 24).

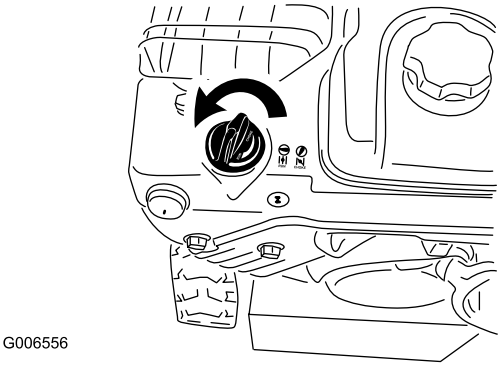

Figure 24

6. Move the throttle to the Fast position (Figure 25).

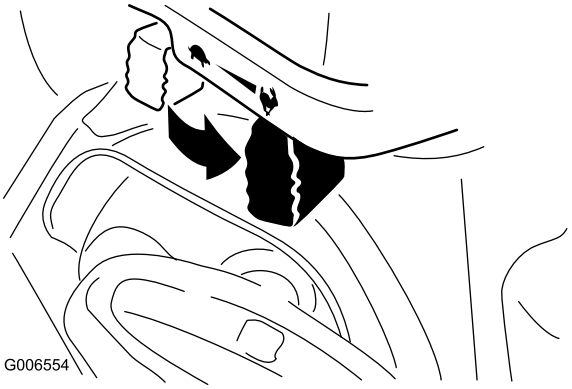

Figure 25

7. Start the machine pulling the recoil starter or pressing the electric-starter button (only 38629) (Figure 26).

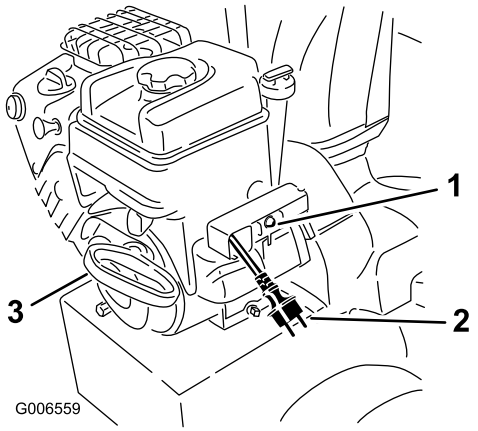

Figure 26

1. Electric-starter button (only 38629)
2. Electric starter plug (only 38629)
3. Recoil starter

Note: To use the electric starter, connect a power cord to the electric starter plug first and then to a power outlet (only 38629).

Important: To prevent damaging the electric starter, run it in short cycles (5 seconds maximum, then wait one minute before trying to start it again). If the engine still does not start, take the machine to an Authorized Service Dealer for service (only 38629).

8. Disconnect the power cord from the power outlet first and then from the machine (only 38629).
9. Allow the engine to warm up for several minutes, move the choke toward the Run position. Wait for the engine to run smoothly before each choke adjustment.

⚠ CAUTION

If you leave the machine plugged into a power outlet, someone can inadvertently start the machine and injure people or damage property.

Unplug the power cord whenever you are not starting the machine.

Stopping the Engine

1. Move the throttle to the Slow position, and then to the Stop position (Figure 27).

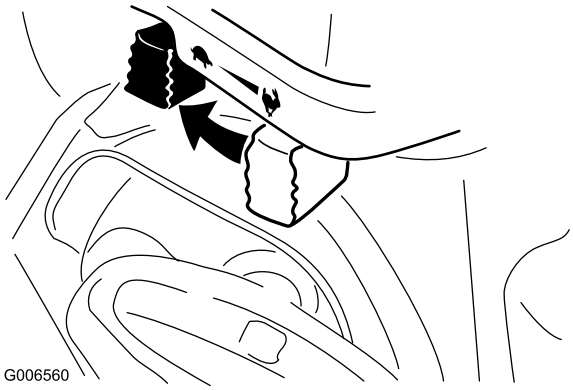

Figure 27

2. Wait for all moving parts to stop before leaving the operating position.
3. Remove the ignition key.
4. Close the fuel shutoff valve by rotating it clockwise (Figure 28).

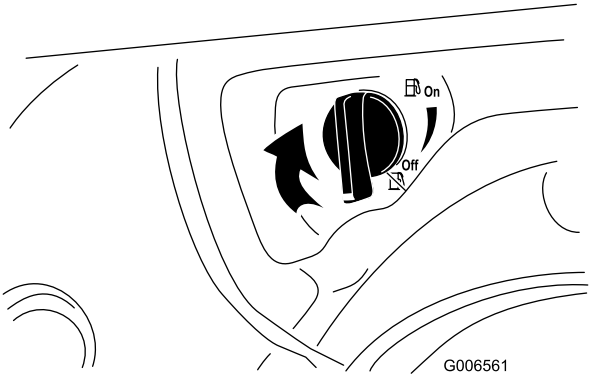

Figure 28

5. Pull the recoil starter 3 or 4 times. This helps prevent the recoil starter from freezing up.

Operating the Traction Drive

⚠ CAUTION

If the traction drive is not properly adjusted, the machine may move in the direction opposite of what you intended, causing injury and/or property damage.

Carefully check the traction drive and adjust it properly, if necessary; refer to Checking the Traction Drive Operation in Setup for more information.

Important: If the machine moves when the traction lever is in the released position, check the traction cable (refer to Checking and Adjusting the Traction Cable) or take the machine to an Authorized Service Dealer for service.

1. To engage the traction drive, squeeze the left hand (traction) lever to the hand-grip (Figure 29).

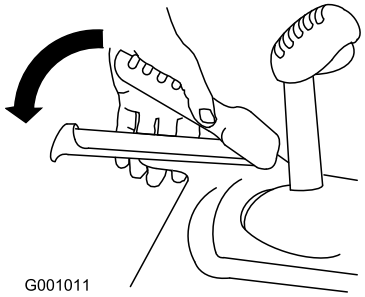

Figure 29

2. To stop the traction drive, release the traction lever.

Operating the Speed Selector

The speed selector has 6 forward and 2 reverse gears. To change speeds, release the traction lever and shift the speed selector lever to the desired position (Figure 30). The lever locks in a notch at each speed selection.

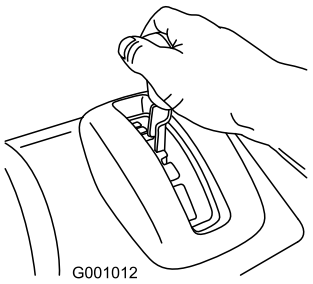

Figure 30

Operating the Auger/Impeller Drive

1. To engage the auger/ impeller drive, squeeze the right hand (auger/ impeller) lever to the handgrip (Figure 31).

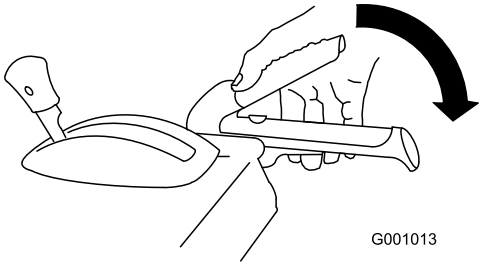

Figure 31

2. To stop the auger and impeller, release the right hand lever.

   Important: When you engage both the auger/impeller lever and the traction lever, the traction lever locks the auger/impeller lever down, freeing your right hand. To release both levers, simply release the left hand (traction) lever.

3. If the auger and impeller continue to rotate when you release the auger/impeller lever, do not operate the machine. Check the auger/impeller cable (refer to Checking and Adjusting the Auger/Impeller Cable) and adjust it if necessary. Otherwise, take the machine to an Authorized Dealer for service.

⚠ WARNING

If the auger and impeller continue to rotate when you release the auger/impeller lever, you could seriously injure yourself or others.

Do not operate the machine. Take it to an Authorized Service Dealer for service.

Operating the Quick Stick®

Hold the blue trigger cap down to use the Quick Stick to move the discharge chute and the chute deflector. Release the trigger cap to lock the discharge chute and chute deflector into position (Figure 32).

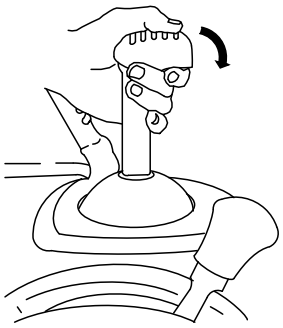

Figure 32

Moving the Discharge Chute

Hold the blue trigger cap down and move the Quick Stick to the left to move the discharge chute to the left; move the Quick Stick to the right to move the discharge chute to the right (Figure 33).

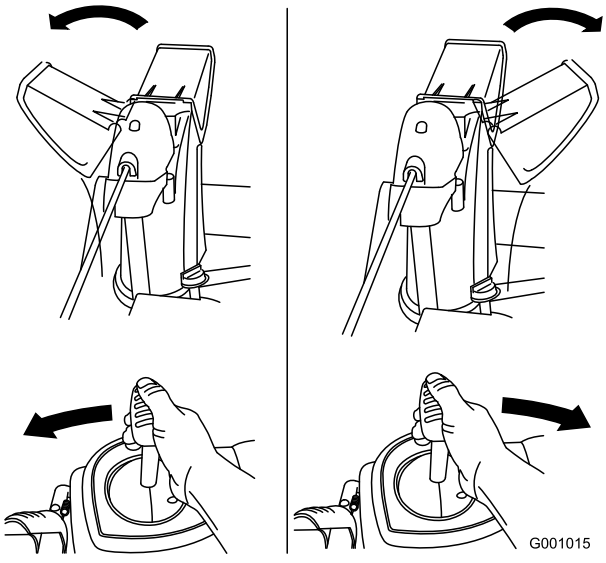

Figure 33

- If the chute does not move, refer to Adjusting the Discharge Chute Latch.
- If the chute does not turn as far to the left as it does to the right, ensure that the cable is routed to the inside of the handles. Refer to Installing the Upper Handle.
- If the chute does not lock into place when you release the trigger cap, refer to Adjusting the Discharge Chute Latch.

Moving the Chute Deflector

Hold the blue trigger cap down and move the Quick Stick forward to lower the chute deflector; move it rearward to raise the chute deflector (Figure 34).

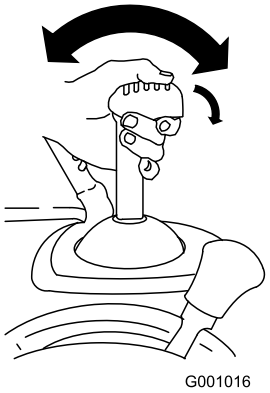

Figure 34

Unclogging the Discharge Chute

If the auger/impeller is running but there is no snow coming out of the discharge chute, the discharge chute may be clogged.

- To unclog the discharge chute, stay in the operating position and release the left hand (traction) lever. While running the auger/impeller, push down on the handles to raise the front of the machine a few inches (centimeters) off the pavement. Then lift the handles quickly to bump the front of the machine on the pavement. Repeat if necessary until a stream of snow comes out the discharge chute.
- If you cannot unclog the discharge chute by bumping the front of the machine, **stop the engine, wait for all moving parts to stop, and use the snow clean-out tool or a stick; never use your hand.**

  Important: Unclogging the discharge chute by bumping the front of the machine on the pavement may cause the skids to move. Adjust the skids and tighten the skid bolts securely.

Preventing Freeze-up

- In snowy and cold conditions, some controls and moving parts may freeze. **Do not use excessive force when trying to operate frozen controls.** If you have difficulty

operating any control or part, start the engine and let it run for a few minutes.

- After using the machine, let the engine run for a few minutes to prevent moving parts from freezing. Engage the auger/impeller to clear any remaining snow from inside the housing. Rotate the Quick Stick to prevent it from freezing. Stop the engine, wait for all moving parts to stop, and remove all ice and snow from the machine.
- With the engine off, pull the recoil starter handle several times and push the electric-starter button once (all models except 38597) to prevent the recoil and electric starters from freezing up.

Operating Tips

⚠ DANGER

When the machine is in operation, the impeller and auger can rotate and cut off or injure hands and feet.

- **Before adjusting, cleaning, inspecting, troubleshooting, or repairing the machine, stop the engine and wait for all moving parts to stop. Disconnect the wire from the spark plug and keep it away from the plug to prevent someone from accidentally starting the engine.**
- **Remove an obstruction from the discharge chute; refer to Unclogging the Discharge Chute. If necessary, use the snow clean-out tool or a stick, not your hands, to remove an obstruction from the discharge chute.**
- **Stay behind the handles and away from the discharge opening while operating the machine.**
- **Keep face, hands, feet, and any other part of your body or clothing away from concealed, moving, or rotating parts.**

⚠ WARNING

The rotor blades can throw stones, toys, and other foreign objects and cause serious personal injury to the operator or to bystanders.

- **Keep the area to be cleared free of all objects that the rotor blades could pick up and throw.**
- **Keep all children and pets away from the area of operation.**
- Always set the throttle to the Fast position when throwing snow.
- If the engine slows down under a load or the wheels slip, shift the machine into a lower gear.
- If the front of the machine rides up, shift the machine into a lower gear. If the front continues to ride up, lift up on the handles.

Maintenance

Note: Determine the left and right sides of the machine from the normal operating position.

Recommended Maintenance Schedule(s)

Maintenance Service Interval	Maintenance Procedure
After the first 2 hours	• Inspect the traction cable and adjust it if necessary.
After the first 5 hours	• Change the engine oil.
Before each use or daily	• Check the engine oil level and add oil if necessary.
Every 50 hours	• Change the engine oil. Change the engine oil every 25 operating hours when operating the engine under a heavy load.

Maintenance Service Interval	Maintenance Procedure
Yearly	• Check the skids and the scraper and adjust them if necessary. • Inspect the traction cable and adjust or replace it if necessary. • Check the auger gearbox oil and add oil if necessary.
Yearly or before storage	• Check the air pressure in the tires and inflate them to 17–20 psi (116–137 kPa). • Drain the gasoline and run the engine to dry out the fuel tank and the carburetor at the end of the season. • Have an Authorized Service Dealer inspect and replace the traction drive belt and/or the auger/impeller drive belt, if necessary.

Important: **You can find more information about maintaining and servicing your machine at www.Toro.com.**

Important: **Refer to your engine operator's manual for additional maintenance procedures. For engine adjustments, repairs, or warranty service not covered in this manual, contact an Authorized Briggs & Stratton Servicing Dealer.**

Preparing for Maintenance

1. Move the machine to a level surface.
2. Stop the engine and wait for all moving parts to stop.
3. Disconnect the spark plug wire. Refer to Replacing the Spark Plug.

Checking the Engine Oil Level

Service Interval: Before each use or daily—Check the engine oil level and add oil if necessary.

1. Remove the dipstick, wipe it clean, then fully install the dipstick.
2. Remove the dipstick and check the oil level (Figure 35). If the oil level is below the Add mark on the dipstick, add oil. Refer to Filling the Engine with Oil.

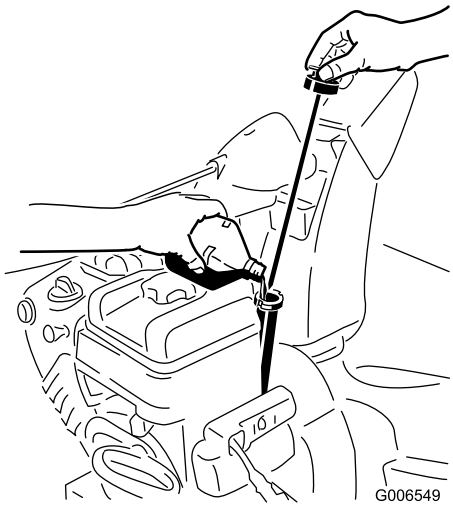

Figure 35

Checking and Adjusting the Skids and Scraper

Service Interval: Yearly—Check the skids and the scraper and adjust them if necessary.

Check the skids and the scraper to ensure that the auger does not contact the paved or gravel surface. Adjust the skids and the scraper as needed to compensate for wear.

1. Check the tire pressure. Refer to Checking the Tire Pressure.
2. Loosen the nuts that secure both skids to the auger sides until the skids slide up and down easily (Figure 36).

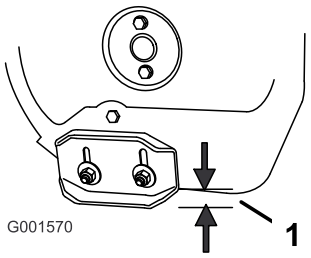

Figure 36

1. 1/2 inch (1.3 cm)

3. Support the side plates so that they are **at least** 1/2 inch (1.3 cm) above a level surface.

   Important: The auger blades must be supported above the ground by the skids.

4. Ensure that the scraper is 1/8 inch (3 mm) above and parallel to a level surface.

   Note: If the pavement is cracked, rough, or uneven, adjust the skids to raise the scraper. For gravel surfaces, adjust the skids further down to prevent the machine from picking up rocks.

5. Move the skids down until they are even with the ground.
6. Firmly tighten the nuts that secure both skids to the auger sides.

   Note: To quickly adjust the skids if they loosen, support the scraper 1/8 inch (3 mm) off the pavement, then adjust the skids down to the pavement.

   Note: If the skids become excessively worn, you can turn them over and set the unused side toward the pavement.

Checking and Adjusting the Traction Cable

Service Interval: After the first 2 hours—Inspect the traction cable and adjust it if necessary.

Yearly—Inspect the traction cable and adjust or replace it if necessary.

If the machine does not drive in the forward or reverse speeds or it drives when you release the traction lever, adjust the traction cable.

With the traction lever disengaged, check the pin in the elongated slot in the left side of the machine above the tire. There should be a gap of 1/32 to 1/16 inch (1 to 1.5 mm) from the front of the slot to the front edge of the pin (Figure 37).

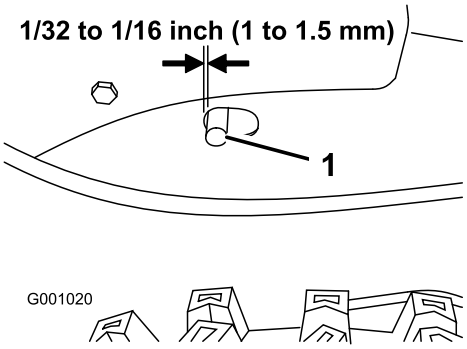

Figure 37

1. Pin

If the left hand (traction) cable is not properly adjusted, do the following steps:

1. Loosen the jam nut.
2. Loosen or tighten the turnbuckle to adjust the pin until it is the proper gap from the front edge of the slot.
3. Tighten the jam nut (Figure 38).

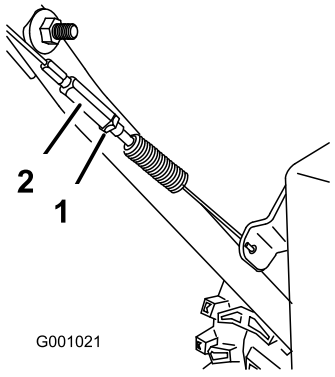

Figure 38

1. Jam nut
2. Turnbuckle

Checking the Auger Gearbox Oil Level

Service Interval: Yearly—Check the auger gearbox oil and add oil if necessary.

1. Move the machine to a level surface.
2. Clean the area around the pipe plug (Figure 39).

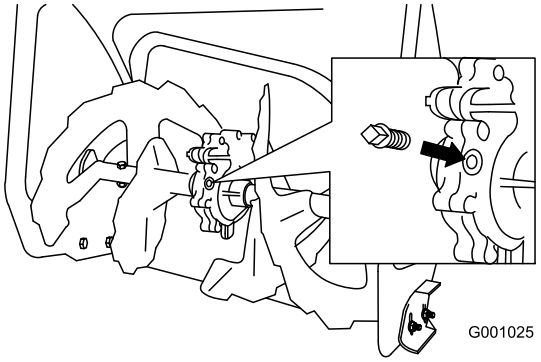

Figure 39

3. Remove the pipe plug from the gearbox.
4. Check the oil level in the gearbox. The oil should be at the point of overflowing at the filler opening.
5. If the oil level is low, add GL-5 or GL-6, SAE 85-95 EP transmission oil to the gearbox until the point of overflow.

   Note: Do not use synthetic oil.
6. Install the pipe plug in the gearbox.

Changing the Engine Oil

Service Interval: After the first 5 hours—Change the engine oil.

Every 50 hours—Change the engine oil. Change the engine oil every 25 operating hours when operating the engine under a heavy load.

If possible, run the engine just before changing the oil because warm oil flows better and carries more contaminants.

Use automotive detergent oil with an API service classification of SF, SG, SH, SJ, SL, or higher. Refer to your engine owner's manual.

Use Figure 40 below to select the best oil viscosity for the outdoor temperature range expected:

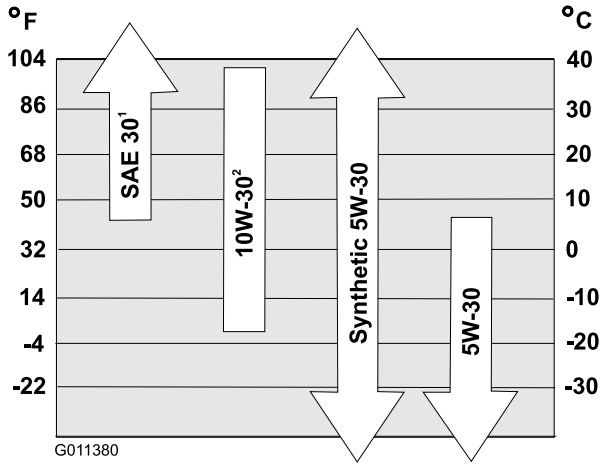

Figure 40

1. Using SAE 30 at outdoor temperatures below 40°F (4°C) will result in hard starting.
2. Using 10W-30 at outdoor temperatures above 80°F (27°C) may result in increased oil consumption; therefore, check the oil level more frequently in these circumstances.

Engine Oil Capacities

Model	Engine Oil Capacity
38597	18 to 20 oz. (0.53 to 0.59 l)
38629	

1. Clean the area around the oil drain cap (Figure 41).

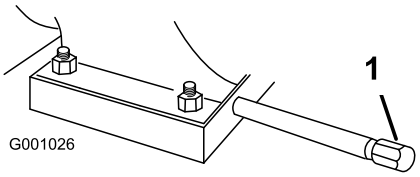

Figure 41

1. Oil drain cap

2. Slide an oil drain pan under the drain extension and remove the oil drain cap.
3. Drain the oil.

   Note: Dispose of the used oil properly at a local recycling center.
4. Install the oil drain cap.
5. Fill the crankcase with oil. Refer to Filling the Engine Crankcase with Oil.

Adjusting the Discharge Chute Latch

If the discharge chute does not lock into the desired position or does not unlock so that you can move it to another position, adjust the discharge chute latch.

1. Remove the fastener on the gear cover (Figure 42), lift the front of the cover up, and slide it back and out of the way.

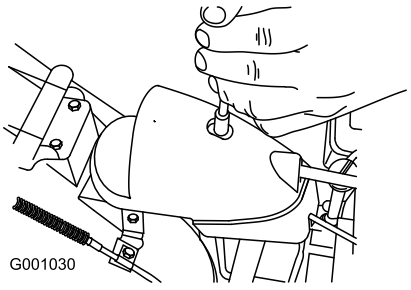

Figure 42

2. Loosen the bolt on the cable clamp (Figure 43).

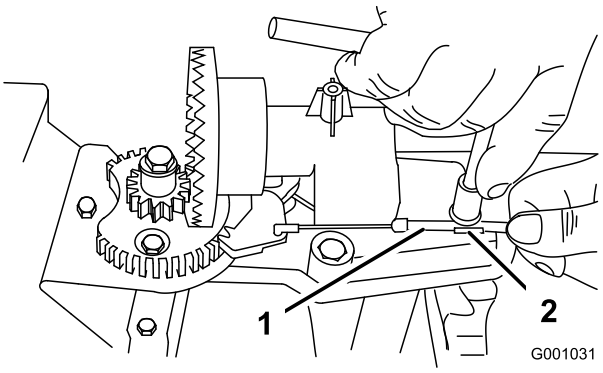

Figure 43

1. Cable conduit
2. Cable clamp

3. Grasp the cable conduit and move it toward the front of the machine until the discharge chute latch fully engages the gear teeth (Figure 43 and Figure 44).

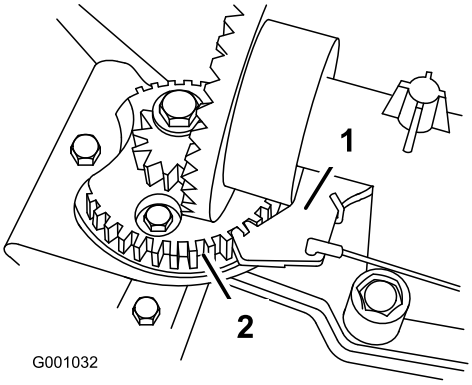

Figure 44

1. Discharge chute latch
2. Gear teeth

   Note: The latch is spring loaded and will naturally move into the teeth of the gear (Figure 44).
4. Remove any slack in the cable by pulling the cable conduit rearward.
5. Tighten the bolt on the cable clamp.
6. Install and secure the gear cover.

Replacing the Drive Belts

If the auger/impeller drive belt or the traction drive belt becomes worn, oil-soaked, or otherwise damaged, go to www.Toro.com for additional service information or have an Authorized Service Dealer replace the belt.

Storage

⚠ WARNING

- **Gasoline vapors can explode.**
- **Do not store gasoline more than 30 days.**
- **Do not store the machine in an enclosure near an open flame.**
- **Allow the engine to cool before storing it.**

Preparing the Machine for Storage

1. On the last refueling of the year, add fuel stabilizer to fresh fuel as directed by the engine manufacturer.
2. Run the engine for 10 minutes to distribute the conditioned fuel through the fuel system.
3. Loosen the hose clamp that secures the fuel line to the valve and slide the fuel line off the fuel shutoff valve.
4. Open the fuel shutoff valve and allow the fuel to drain out of the fuel tank into an approved fuel container.
5. Install the fuel line onto the fuel shutoff valve and secure it with a hose clamp.
6. Run the machine until the engine stops from running out of fuel.
7. Prime the engine and start it again.
8. Allow the engine to run until it stops. When you can no longer start the engine, it is sufficiently dry.
9. Stop the engine and allow it to cool.
10. Remove the ignition key.
11. Disconnect the spark plug wire.
12. Remove the spark plug, add 1 oz. (30 ml) of oil through the spark plug hole, and pull the starter rope **slowly** several times to distribute oil throughout the cylinder to prevent cylinder corrosion during the off-season.
13. Loosely install the spark plug.
14. Dispose of any unused fuel properly. Recycle it according to local codes, or use it in your automobile.

    Note: Do not store stabilized fuel for more than 90 days.
15. Clean the machine thoroughly.
16. Touch up chipped surfaces with paint available from an Authorized Service Dealer. Sand affected areas before painting, and use a rust preventative to prevent the metal parts from rusting.
17. Tighten all loose screws, bolts, and locknuts. Repair or replace any damaged parts.
18. Cover the machine and store it in a clean, dry place out of the reach of children. Allow the engine to cool before storing it in any enclosure.

Removing the Machine from Storage

1. Remove the spark plug and spin the engine rapidly using the starter to blow the excess oil from the cylinder.
2. Install the spark plug by hand and then torque it to 15 ft-lb (20.4 N-m).
3. Connect the spark plug wire.
4. Perform the annual maintenance procedures as given in the Recommended Maintenance Schedule.

Troubleshooting

Problem	Possible Cause	Corrective Action
Electric starter does not turn (electric-start models only)	1. The power cord is disconnected at the outlet or the machine. 2. The power cord is worn, corroded, or damaged. 3. The power outlet is not energized.	1. Connect the power cord to the outlet and/or the machine. 2. Replace the power cord. 3. Have a qualified electrician energize the outlet.
Engine does not start or starts hard	1. The key is not in the ignition or is in the Stop position. 2. The choke is in the Off position and the primer has not been pressed. 3. The fuel shutoff valve is not open. 4. The throttle is not in the Fast position. 5. The fuel tank is empty or the fuel system contains stale fuel. 6. The spark plug wire is loose or disconnected. 7. The spark plug is pitted, fouled, or the gap is incorrect. 8. The fuel vent cap is restricted. 9. The engine oil level in the engine crankcase is too low or too high.	1. Insert the key into the ignition and turn it to the On position. 2. Move the choke to the On position and press the primer 3 times. 3. Open the fuel shutoff valve. 4. Move the throttle to the Fast position. 5. Drain and/or fill the fuel tank with fresh gasoline (not more than 30 days old). If the problem persists, contact an Authorized Service Dealer. 6. Connect the wire to the spark plug. 7. Check the spark plug and adjust the gap if necessary. Replace the spark plug if it is pitted, fouled, or cracked. 8. Remove the vent restriction or replace the fuel cap. 9. Add or drain oil to adjust the oil level in the engine crankcase to the Full mark on the dipstick.
Engine runs rough	1. The choke is in the On position. 2. The fuel shutoff valve is not completely open. 3. The fuel tank is nearly empty or contains stale fuel. 4. The spark plug wire is loose. 5. The spark plug is pitted, fouled, or the gap is incorrect. 6. The engine oil level in the engine crankcase is too low or too high.	1. Move the choke to the Off position. 2. Open the fuel shutoff valve. 3. Drain and fill the fuel tank with fresh gasoline (not more than 30 days old). If the problem persists, contact an Authorized Service Dealer. 4. Connect the wire to the spark plug. 5. Check the spark plug and adjust the gap if necessary. Replace the spark plug if it is pitted, fouled, or cracked. 6. Add or drain oil to adjust the oil level in the engine crankcase to the Full mark on the dipstick.

Problem	Possible Cause	Corrective Action
Engine runs, but the machine discharges snow poorly or not at all	1. The throttle is not in the Fast position when throwing snow.	1. Move the throttle to the Fast position.
	2. The machine is moving too fast to clear the snow.	2. Shift the machine into a lower gear.
	3. You are trying to remove too much snow per swath.	3. Reduce the amount of snow removed per swath.
	4. You are trying to remove extremely heavy or wet snow.	4. Don't overload the machine with extremely heavy or wet snow.
	5. The discharge chute is plugged.	5. Unclog the discharge chute.
	6. The auger/impeller drive belt is loose or is off the pulley.	6. Install and/or adjust the auger/impeller drive belt; refer to www.Toro.com for servicing information or take the machine to an Authorized Service Dealer.
	7. The auger/impeller drive belt is worn or broken.	7. Replace the auger/impeller drive belt; refer to www.Toro.com for servicing information or take the machine to an Authorized Service Dealer.
Discharge chute either does not lock into place or does not move	1. The discharge chute latch is not properly adjusted.	1. Adjust the discharge chute latch.
The machine does not properly clear the snow off the surface	1. The skids and/or scraper are not properly adjusted.	1. Adjust the skids and/or the scraper.
	2. The pressure in the tires is not equal.	2. Check and adjust the pressure in one or both tires.

International Distributor List

Distributor:	Country:	Phone Number:
Atlantis Su ve Sulama Sisstemleri Lt	Turkey	90 216 344 86 74
Balama Prima Engineering Equip.	Hong Kong	852 2155 2163
B-Ray Corporation	Korea	82 32 551 2076
Casco Sales Company	Puerto Rico	787 788 8383
Ceres S.A.	Costa Rica	506 239 1138
CSSC Turf Equipment (pvt) Ltd.	Sri Lanka	94 11 2746100
Cyril Johnston & Co.	Northern Ireland	44 2890 813 121
Equiver	Mexico	52 55 539 95444
Femco S.A.	Guatemala	502 442 3277
G.Y.K. Company Ltd.	Japan	81 726 325 861
Geomechaniki of Athens	Greece	30 10 935 0054
Guandong Golden Star	China	86 20 876 51338
Hako Ground and Garden	Sweden	46 35 10 0000
Hako Ground and Garden	Norway	47 22 90 7760
Hayter Limited (U.K.)	United Kingdom	44 1279 723 444
Hydroturf Int. Co Dubai	United Arab Emirates	97 14 347 9479
Hydroturf Egypt LLC	Egypt	202 519 4308
Ibea S.P.A.	Italy	39 0331 853611
Irriamc	Portugal	351 21 238 8260
Irrigation Products Int'l Pvt Ltd.	India	86 22 83960789
Jean Heybroek b.v.	Netherlands	31 30 639 4611
Maquiver S.A.	Colombia	57 1 236 4079
Maruyama Mfg. Co. Inc.	Japan	81 3 3252 2285
Metra Kft	Hungary	36 1 326 3880
Mountfield a.s.	Czech Republic	420 255 704 220
Munditol S.A.	Argentina	54 11 4 821 9999
Oslinger Turf Equipment SA	Ecuador	593 4 239 6970
Oy Hako Ground and Garden Ab	Finland	358 987 00733
Parkland Products Ltd.	New Zealand	64 3 34 93760
Prochaska & Cie	Austria	43 1 278 5100
RT Cohen 2004 Ltd.	Israel	972 986 17979
Riversa	Spain	34 9 52 83 7500
Sc Svend Carlsen A/S	Denmark	45 66 109 200
Solvert S.A.S.	France	33 1 30 81 77 00
Spypros Stavrinides Limited	Cyprus	357 22 434131
Surge Systems India Limited	India	91 1 292299901
T-Markt Logistics Ltd.	Hungary	36 26 525 500
Toro Australia	Australia	61 3 9580 7355
Toro Europe NV	Belgium	32 14 562 960

The Toro Warranty

Conditions and Products Covered

The Toro Company and its affiliate, Toro Warranty Company, pursuant to an agreement between them, jointly promise to the original purchaser* to repair the Toro Products listed below if defective in materials or workmanship.

The following time periods apply from the date of purchase:

Products	Warranty Period
Walk Power Mowers	
• Cast Deck	5 years Residential Use[2] 45 Days Commercial Use
• Engine	5 years GTS Promise See engine manufacturer's warranty[1]
• Steel Deck	2 years Residential Use[2] 45 Days Commercial Use
• Engine	2 years GTS Promise See engine manufacturer's warranty[1]
Electric Hand Held Products	2 year limited warranty
Snowthrowers	
• Single Stage	2 years Residential Use[2] 45 Days Commercial Use
• Two Stage	2 years Residential Use[2] 45 Days Commercial Use
• Electric	2 years Residential Use[2]
All Ride-On Units Below	
• Engine	See engine manufacturer's warranty[1] 1 year Parts only
• Attachments	1 year
Rear Engine Riders	2 years Residential Use[2] 90 Days Commercial Use
Lawn & Garden Tractors	2 years Residential Use[2] 90 Days Commercial Use
TimeCutter Z Mowers	3 years Residential Use[2] 30 Days Commercial Use
TITAN Mowers	3 years or 240 hours[3]
• Frame	Lifetime (original owner only)[4]
TITAN MX Mowers	3 years or 400 hours[3]
• Frame	Lifetime (original owner only)[4]
Z Master Mowers — 2000 Series	5 years or 1200 hours[3]
• Frame	Lifetime (original owner only)[4]

*Original Purchaser means the person who originally purchased the Toro Product.

[1]Some engines used on Toro Products are warranted by the engine manufacturer.

[2]Residential use means use of the product on the same lot as your home. Use at more than one location is considered commercial use and the commercial use warranty would apply.

[3]Whichever occurs first.

[4]Lifetime Frame Warranty - If the main frame, consisting of the parts welded together to form the tractor structure that other components such as the engine are secured to, cracks or breaks in normal use, it will be repaired or replaced, at Toro's option, under warranty at no cost for parts and labor. Frame failure due to misuse or abuse and failure or repair required due to rust or corrosion are not covered.

This warranty includes the cost of parts and labor, but you must pay transportation costs.

Warranty may be denied if the hour meter is disconnected, altered, or shows signs of being tampered with.

Owner Responsibilities

You must maintain your Toro Product by following the maintenance procedures described in the *Operator's Manual*. Such routine maintenance, whether performed by a dealer or by you, is at your expense.

Instructions for Obtaining Warranty Service

If you think that your Toro Product contains a defect in materials or workmanship, follow this procedure:

1. Contact your seller to arrange service of the product. If for any reason it is impossible for you to contact your seller, you may contact any Toro Authorized Distributor to arrange service.
2. Bring the product and your proof of purchase (sales receipt) to the Service Dealer. If for any reason you are dissatisfied with the Service Dealer's analysis or with the assistance provided, contact us at:

   Customer Care Department, RLC Division
   The Toro Company
   8111 Lyndale Avenue South
   Bloomington, MN 55420-1196
   Manager: Technical Product Support: 001–952–887–8248

   See attached Distributor List

Items and Conditions Not Covered

This express warranty does not cover the following:

- Cost of regular maintenance service or wear parts, such as blades, rotor blades (paddles), scraper blades, belts, fuel, lubricants, oil changes, spark plugs, cable/linkage or brake adjustments
- Any product or part which has been altered or misused and requires replacement or repair due to accidents or lack of proper maintenance
- Repairs necessary due to failure to use fresh fuel (less than one month old), or failure to properly prepare the unit prior to any period of non-use over one month
- Engine and transmission. These are covered by the appropriate manufacturer's guarantees with separate terms and conditions

All repairs covered by these warranties must be performed by an Authorized Toro Service Dealer using Toro approved replacement parts.

General Conditions

The purchaser is covered by the national laws of each country. The rights to which the purchaser is entitled with the support of these laws are not restricted by this warranty.