Form No. 3373-726 Rev A

TORO®

Count on it.

Operator's Manual

Pro Force Debris Blower

Model No. 44538—Serial No. 312000280 and Up

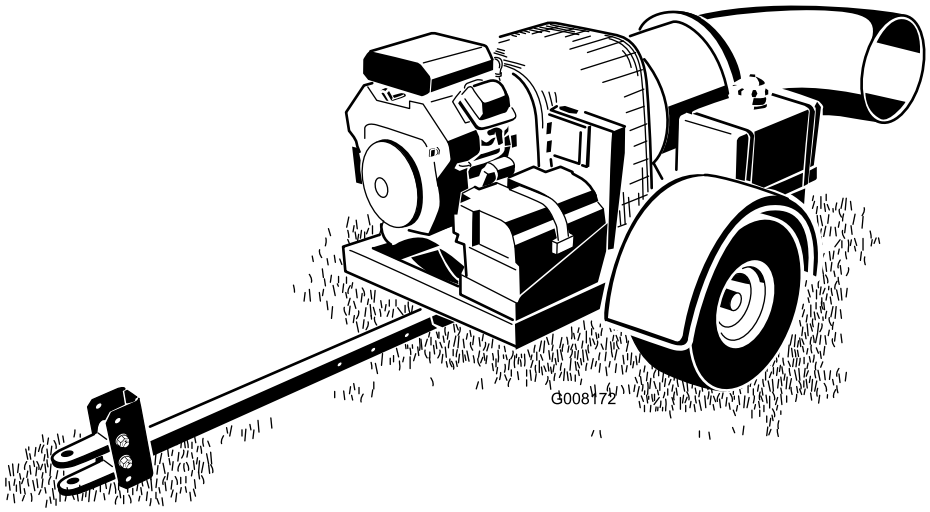

CE

To register your product or download an *Operator's Manual* or *Parts Catalog* at no charge, go to www.Toro.com.

Original Instructions (EN)

This product complies with all relevant European directives, for details please see the separate product specific Declaration of Conformity (DOC) sheet.

WARNING

CALIFORNIA
Proposition 65 Warning

The engine exhaust from this product contains chemicals known to the State of California to cause cancer, birth defects, or other reproductive harm.

Important: This engine is not equipped with a spark arrester muffler. It is a violation of California Public Resource Code Section 4442 to use or operate the engine on any forest-covered, brush-covered, or grass-covered land. Other states or federal areas may have similar laws.

Electromagnetic Compatibility

Domestic: This device complies with FCC rules Part 15. Operation is subject to the following two conditions: (1) This device may not cause harmful interference and (2) this device must accept any interference that may be received, including interference that may cause undesirable operation.

This equipment generates and uses radio frequency energy and if not installed and used properly, that is, in strict accordance with the manufacturer's instructions, may cause interference to radio and television reception. It has been type tested and found to comply with the limits for a FCC Class B computing device in accordance with the specifications in Subpart J of Part 15 of FCC Rules, which are designed to provide reasonable protection against such interference in a residential installation. However, there is no guarantee that interference will not occur in a particular installation. If this equipment does cause interference to radio or television reception, which can be determined by turning the equipment off and on, the user is encouraged to try to correct the interference by one or more of the following measures:Reorient the receiving antenna, relocate the remote control receiver with respect to the radio/TV antenna or plug the controller into a different outlet so that the controller and radio/TV are on different branch circuits.If necessary, the user should consult the dealer or an experienced radio/television technician for additional suggestions.The user may find the following booklet prepared by the Federal Communications Commission helpful: "How to Identify and Resolve Radio-TV Interference Problems". This booklet is available from the U.S. Government Printing Office, Washington, DC 20402. Stock No. 004-000-00345-4.

FCC ID: LOBSBU200-Base, LOBSHH200-Hand Held

IC: 7955A-SBU200-Base, 7955A-SHH200-Hand Held

Operation is subject to the following two conditions: (1) this device may not cause interference, and (2) this device must accept any interference, including interference that may cause undesired operation of the device.

⚠ CAUTION

If a user makes changes or modifications not expressly approved by the party responsible for compliance, they could void the user's authority to operate the equipment.

This spark ignition system complies with Canadian ICES-002.

Introduction

The debris blower is towed behind a ride-on machine which is intended to be used by professional, hired operators in commercial applications. It is primarily designed to use wind power to quickly clear large areas of unwanted debris on well-maintained lawns in parks, golf courses, sports fields, and on commercial grounds.

Read this information carefully to learn how to operate and maintain your product properly and to avoid injury and product damage. You are responsible for operating the product properly and safely.

You may contact Toro directly at www.Toro.com for product and accessory information, help finding a dealer, or to register your product.

Whenever you need service, genuine Toro parts, or additional information, contact an Authorized Service Dealer or Toro Customer Service and have the model and serial numbers of your product ready. Figure 1 identifies the location of the model and serial numbers on the product. Write the numbers in the space provided.

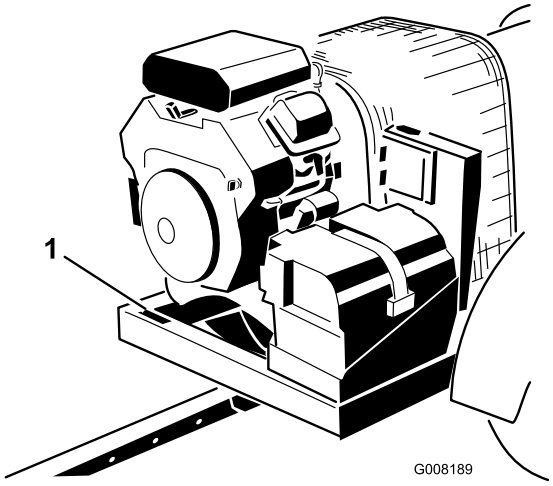

Figure 1

1. Model and serial number location

© 2012—The Toro® Company
8111 Lyndale Avenue South
Bloomington, MN 55420

Contact us at www.Toro.com.
Printed in the USA.
All Rights Reserved

Model No. _____

Serial No. _____

This manual identifies potential hazards and has safety messages identified by the safety alert symbol (Figure 2), which signals a hazard that may cause serious injury or death if you do not follow the recommended precautions.

Figure 2

1. Safety alert symbol

This manual uses 2 other words to highlight information. **Important** calls attention to special mechanical information and **Note** emphasizes general information worthy of special attention.

Contents

Introduction 2
Safety 4
- Safe Operating Practices 4
- Safety and Instructional Decals 7

Setup 8
- 1 Remove, Activate and Charge Battery 8
- 2 Install the Battery 10
- 3 Mounting the Hitch to the Debris Blower 10
- 4 Connecting the Debris Blower to the Tow Vehicle 11

Product Overview 12
- Controls 12

Operation 13
- Adding Fuel 13
- Checking the Engine Oil Level 14
- Checking the Tire Pressure 14
- Checking the Torque of the Wheel Lug Nuts 14
- Starting and Stopping the Engine 14
- Start, Stop and Inactivity Time out 16
- Power Save Mode 16
- Adjusting the Nozzle Direction 16
- Operating Tips 16

Maintenance 18
- Recommended Maintenance Schedule(s) 18
- Daily Maintenance Checklist 19
- Servicing the Air Cleaner 20
- Servicing the Carbon Canister 21
- Servicing the Engine Oil 21
- Associate Remote Control and Base Unit 23
- Servicing the Spark Plugs 24
- Replacing the Fuel Filter 24
- Servicing the Fuel Tank 25
- Cleaning the Engine Screen and the Oil Cooler 25
- Checking the Nozzle 25
- Adjusting the Belt 26
- Electrical Maintenance 26
- Storage 28
- Waste Disposal 28

Schematics 29

Safety

Hazard control and accident prevention are dependent upon the awareness, concern, and proper training of the personnel involved in the operation, transport, maintenance, and storage of the machine. Improper use or maintenance of the machine can result in injury or death. To reduce the potential for injury or death, comply with the following safety instructions.

Safe Operating Practices

The following instructions are from ANSI standard B71.4-2004.

Training

- Read the Operator's Manual and other training material. If the operator(s) or mechanic(s) can not read English it is the owner's responsibility to explain this material to them.
- Become familiar with the safe operation of the equipment, operator controls, and safety signs.
- All operators and mechanics should be trained. The owner is responsible for training the users.
- Never let children or untrained people operate or service the equipment. Local regulations may restrict the age of the operator.
- The owner/user can prevent and is responsible for accidents or injuries occurring to himself or herself, other people or property.

Preparation

- Evaluate the terrain to determine what accessories and attachments are needed to properly and safely perform the job. Only use accessories and attachments approved by the manufacturer.
- Wear appropriate clothing including hard hat, safety glasses and hearing protection. Long hair, loose clothing or jewelry may get tangled in moving parts.
- Inspect the area where the equipment is to be used and remove all objects such as rocks, toys and wire which can be thrown by the machine.
- Keep all bystanders away from the operating area.
- Keep all shields and safety devices in place. If a shield, safety device, or decal is illegible or damaged, repair or replace it before operation is commenced. Also tighten any loose nuts, bolts, and screws to ensure that the machine is in safe operating condition.
- Use extra care when handling gasoline and other fuels. They are flammable and vapors are explosive.
  - Use only an approved container
  - Never refuel or drain the machine indoors.
  - Never remove gas cap or add fuel with engine running. Allow engine to cool before refueling. Do not smoke.
- Check that safety switches and shields are attached and functioning properly. Do not operate unless they are functioning properly.

Operation

- Never operate the debris blower when it is not connected to a tow vehicle.
- Be alert, slow down and use caution when making turns. Look behind and to the side before changing directions.
- Be aware of the blower nozzle direction and do not point it at anyone.
- Use extreme care when loading or unloading the machine into or off of a trailer or truck.
- Use care when approaching blind corners, shrubs, trees, or other objects that may obscure vision.
- Do not run the engine in or direct the blower nozzle into a confined area without adequate ventilation. Exhaust fumes are hazardous and could possibly be deadly.
- This product may exceed noise levels of 85 dB(A) at the operator position. Hearing protection is recommended for prolonged exposure to reduce the potential of permanent hearing damage.
- Using the machine demands attention. To prevent loss of control:
  - Operate only in daylight or when there is good artificial light.
  - Drive slowly and watch for holes or other hidden hazards.
  - Do not drive close to a sand trap, ditch, creek, or other hazard.
  - Reduce your speed when making sharp turns and when turning on hillsides.
  - Avoid sudden starts and stops.
  - Before backing up, look to the rear and ensure that no one is behind the machine.
  - Watch out for traffic when near or crossing roads. Always yield the right-of-way.

- Stay away from the nozzle opening when the machine is operating. Keep all bystanders away from the nozzle opening and don't direct discharge toward bystanders.
- Do not operate the machine under the influence of alcohol or drugs.
- Lightning can cause severe injury or death. If lightning is seen or thunder is heard in the area, do not operate the machine; seek shelter.
- If the tow vehicle engine stalls or the machine loses headway and cannot make it to the top of a slope, do not turn the machine around. Always back the tow vehicle slowly straight down the slope.
- **Do not take an injury risk!** When a person or pet appears unexpectedly in or near the operating area, **stop operation.** Careless operation, combined with terrain angles, ricochets, or improperly positioned guards can lead to thrown object injuries. Do not resume operation until the area is cleared.
- Do not touch the engine or muffler while the engine is running or soon after it is stopped. These areas could be hot enough to cause a burn.

Remote Control Operation

- Read and follow all instructions.
- Failure to abide by Safety Precautions may result in equipment failure, loss of authority to operate the equipment, and personal injury.
- Use and maintain proper wiring. Follow equipment manufacturer instructions. Improper, loose, and frayed wiring can cause system failure, equipment damage, and intermittent operation.
- Changes or modifications made to equipment not expressly approved by the manufacturer will void the warranty
- Owner/operators of the equipment must abide by all applicable Federal, State, and Local laws concerning installation and operation of the equipment. Failure to comply could result in penalties and could void user authority to operate the equipment.
- Make sure that the machinery and surrounding area is clear before operating. Do not activate the remote control system until certain that it is safe to do so.
- Turn off the remote control and remove power from the base unit before attempting any maintenance. This will prevent accidental operation of the controlled machinery.
- Power can be removed from the Base Unit by detaching the 12-pin cables from the base unit connector P1, or by removing the source power from the circuit.
- Use a damp cloth to keep units clean. Remove mud, concrete, dirt, etc. after use to prevent obstructing or clogging the buttons, levers, wiring, and switches.
- Do not allow liquid to enter the remote control or base unit enclosures. Do not use high pressure equipment to clean the remote control or base unit.
- Disconnect the radio base unit before welding on the machine. Failure to disconnect the base unit may result in destruction of or damage to the base unit.
- Operate and store units only within the specified operation and storage temperatures defined in the Specifications of this document.

Maintenance and Storage

- Let engine cool before storing and do not store near flame.
- Shut off fuel while storing or transporting. Do not store fuel near flames or drain indoors.
- Park machine on level ground. Never allow untrained personnel to service machine.
- Use jack stands to support components when required.
- Disconnect battery or remove spark plug wires before making any repairs. Disconnect the negative terminal first and the positive last. Reconnect positive first and negative last.
- Remove the key from the ignition switch to prevent accidental starting of the engine when servicing, adjusting, or storing the machine.
- Perform only those maintenance instructions described in this manual. If major repairs are ever needed or assistance is desired, contact an Authorized Toro Distributor.
- To reduce a potential fire hazard, keep the engine free of excessive grease, grass, leaves, and accumulations of dirt. Never wash a warm engine or any electrical parts with water.
- Be sure that the machine is in safe operating condition by keeping nuts, bolts, and screws tight. Check the fan shaft bearing mounting bolts and nuts frequently to be sure that they are tightened to specification.
- If the engine must be running to perform a maintenance adjustment, keep hands, feet, clothing, and other parts of the body away from the fan and other moving parts.
- Do not over speed the engine by changing the governor settings. To be sure of safety and accuracy, have an Authorized Toro Distributor check the maximum engine speed with a tachometer.

- The engine must be shut off before checking the oil or adding oil to the crankcase.
- Keep hands and feet away from moving parts. If possible, do not make adjustments with the engine running.
- Charge batteries in an open well ventilated area, away from spark and flames. Unplug charger before connecting or disconnecting from battery. Wear protective clothing and use insulated tools.
- Keep all parts in good working condition and all hardware tightened. Replace all worn or damaged decals.
- Use only Toro approved attachments. Warranty may be voided if used with unapproved attachments.

Safety and Instructional Decals

Safety decals and instructions are easily visible to the operator and are located near any area of potential danger. Replace any decal that is damaged or lost.

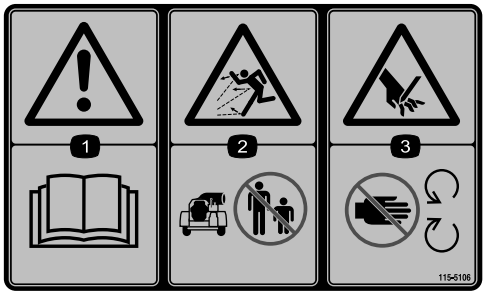

115-5106

1. Warning—read the *Operator's Manual.*
2. Thrown object hazard—keep bystanders a safe distance from the machine.
3. Cutting/dismemberment hazard; hand—stay away from moving parts; keep all guards and shields in place.

115-5113

1. Warning—read the *Operator's Manual,* wear hearing and eye protection.

115-5105

1. Warning—read the *Operator's Manual.*
2. Warning—do not operate this machine unless you are trained.
3. Warning—stop the engine; remove the ignition key and read the instructions before servicing or performing maintenance.
4. Thrown object hazard—keep bystanders a safe distance from the machine.
5. Warning—stay away from moving parts; keep all guards in place.
6. Warning—do not start the engine when machine is disconnected from the tow vehicle, hitch the machine to the tow vehicle before starting the engine.

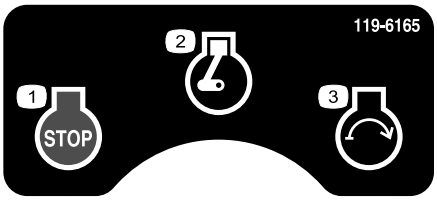

119–6165

1. Engine—Stop
2. Engine—Run
3. Engine—Start

Setup

Loose Parts

Use the chart below to verify that all parts have been shipped.

Procedure	Description	Qty.	Use
1	Electrolyte (not supplied)	A/R	Charge the battery
2	Petroleum jelly (not supplied)	A/R	Install the battery
3	Debris blower assembly Hitch Bolt (3/8 x 3 inches) Flange nut (3/8 inch) Hitch clevis Bolt (5/8 x 4–1/2 inch) Lock nut (5/8 inch)	1 1 2 2 1 2 2	Mount the hitch to the debris blower
4	Hitch pin Clevis	1 1	Connect the blower to the tow vehicle

Media and Additional Parts

Description	Qty.	Use
Parts Catalog Operator's Manual	1 1	Read before operating.
Engine Manual	1	Use to reference engine operation and maintenance
Operator Training Material	1	View before operating the machine
Remote control	1	Use to remotely operate blower
Certificate of compliance	1	Ensure CE compliance.

Note: Determine the left and right sides of the machine from the normal operating position.

1

Remove, Activate and Charge Battery

Parts needed for this procedure:

A/R	Electrolyte (not supplied)

Procedure

1. If the battery is not filled with electrolyte or activated, bulk electrolyte with 1.260 specific gravity must be purchased from a local battery supply outlet and added to the battery.

⚠ DANGER

Battery electrolyte contains sulfuric acid which is a deadly poison and causes severe burns.

- **Do not drink electrolyte and avoid contact with skin, eyes or clothing. Wear safety glasses to shield your eyes and rubber gloves to protect your hands.**
- **Fill the battery where clean water is always available for flushing the skin.**

WARNING

CALIFORNIA
Proposition 65 Warning

Battery posts, terminals, and related accessories contain lead and lead compounds, chemicals known to the State of California to cause cancer and reproductive harm. Wash hands after handling.

2. Remove the strap securing the battery cover to the battery box (Figure 3).
3. Remove the cover and lift the battery out of the battery box.

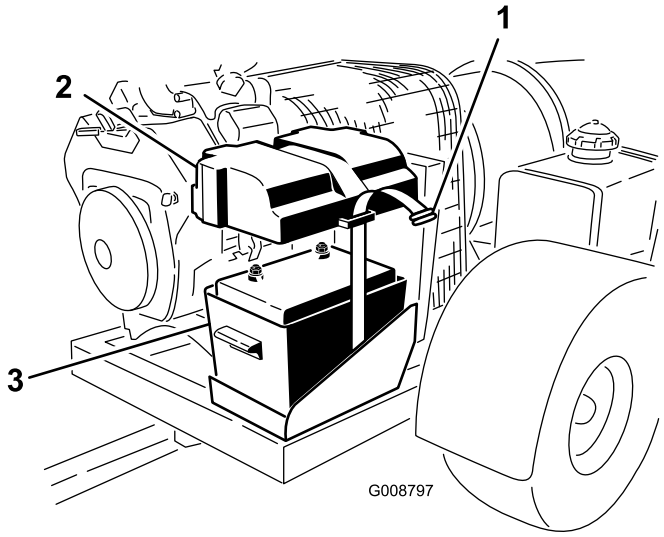

Figure 3

1. Battery strap
2. Battery cover
3. Battery box

4. Clean the top of the battery and remove the vent caps (Figure 4).
5. Carefully fill each cell with electrolyte to the proper level (Figure 4).

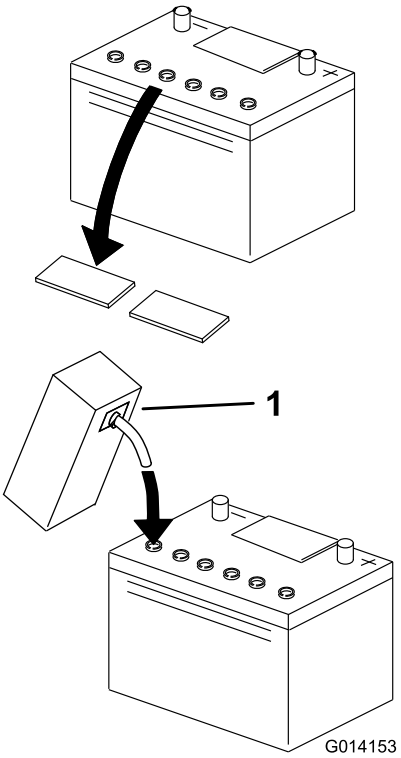

Figure 4

1. Electrolyte

Important: Do not overfill the battery. Electrolyte will overflow onto other parts of the machine and severe corrosion and deterioration will result.

6. Replace the vent caps.
7. Connect a 3 to 4 amp battery charger to the battery posts (Figure 5). Charge the battery at a rate of 3 to 4 amperes for 4 to 8 hours.

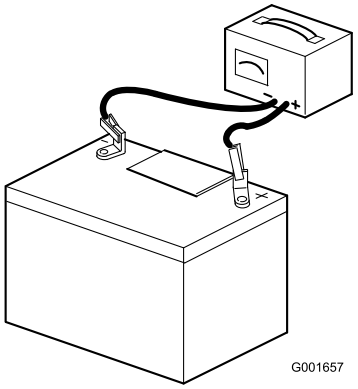

Figure 5

⚠ WARNING

Charging the battery produces gasses that can explode.

Never smoke near the battery and keep sparks and flames away from battery.

8. After charging, remove the vent caps and check the electrolyte level.
9. If needed, fill each cell to the proper level (Figure 4).
10. When the battery is charged, disconnect the charger from the electrical outlet and the battery posts.

2

Install the Battery

Parts needed for this procedure:

A/R	Petroleum jelly (not supplied)

Procedure

1. Slide the battery into the battery box with the terminals toward the engine.

⚠ WARNING

Battery terminals or metal tools could short against metal processor components causing sparks. Sparks can cause the battery gasses to explode, resulting in personal injury.

- **When removing or installing the battery, do not allow the battery terminals to touch any metal parts of the machine.**
- **Do not allow metal tools to short between try terminals and metal parts of the machine.**

2. Attach the positive cable (red cable) to the positive (+) terminal.

⚠ WARNING

Incorrect battery cable routing could damage the blower and cables causing sparks. Sparks can cause the battery gasses to explode, resulting in personal injury.

- **Always disconnect the negative (black) battery cable before disconnecting the positive (red) cable.**
- **Always connect the positive (red) battery cable before connecting the negative (black) cable.**

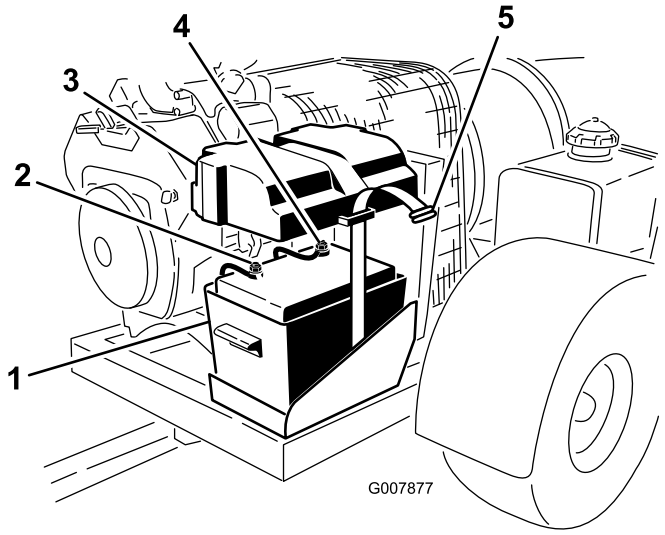

Figure 6

1. Battery box
2. Negative battery post
3. Battery cover
4. Positive battery post
5. Battery strap

3. Attach the negative cable (black cable) to the negative (-) terminal of the battery.
4. Coat the terminals and mounting fasteners with petroleum jelly to prevent corrosion.
5. Install the battery cover and secure with the strap.

3

Mounting the Hitch to the Debris Blower

Parts needed for this procedure:

1	Debris blower assembly
1	Hitch
2	Bolt (3/8 x 3 inches)
2	Flange nut (3/8 inch)
1	Hitch clevis
2	Bolt (5/8 x 4–1/2 inch)
2	Lock nut (5/8 inch)

Procedure

1. Position the debris blower on a flat, level surface.
2. Insert the hitch tube into the frame brackets (Figure 7). Secure the tube to the frame with 2 bolts (3/8 x 3 inches) and flange nuts (3/8 inch).

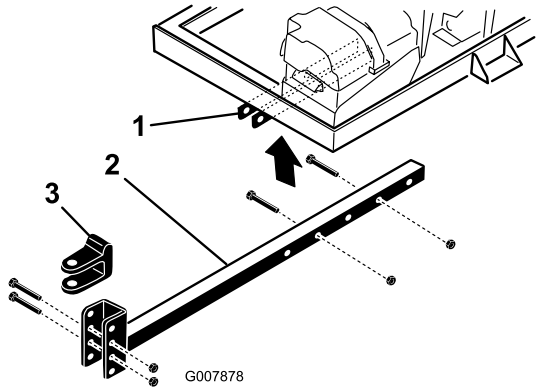

Figure 7

1. Frame brackets
2. Hitch tube
3. Hitch clevis

Note: The hitch tube can be rotated 180 degrees to accommodate different hitch heights.

4

Connecting the Debris Blower to the Tow Vehicle

Parts needed for this procedure:

1	Hitch pin
1	Clevis

Procedure

1. Back the tow vehicle up to the blower.
2. Adjust the blower hitch clevis to the same level as tow vehicle hitch as follows:
   - Set the hitch tube on a jack stand to keep it parallel to the ground.
   - Remove the bolts and locknuts securing hitch clevis (Figure 7) to hitch tube.
   - Raise or lower the hitch clevis to the position approximately level with the tow vehicle hitch.
   - Secure the clevis to the hitch with the bolts and locknuts previously removed. Make sure debris blower frame is parallel with the ground.
3. Adjust the hitch tube length to assure the blower does not contact the tow vehicle when turning as follows:
   - Remove the bolts and nuts securing the hitch tube to frame brackets (Figure 7).
   - Secure the tube to the frame with the bolts and flange nuts.
4. Connect the blower clevis hitch to the tow vehicle hitch with the hitch pin and clevis (Figure 8).

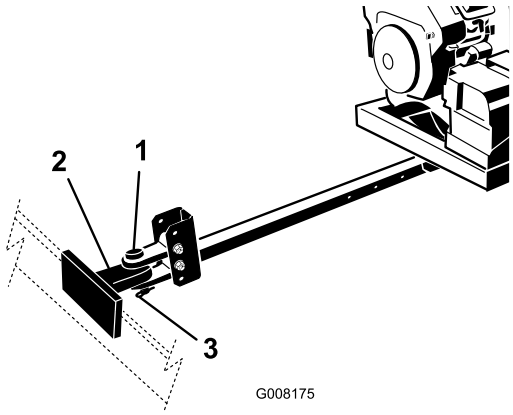

Figure 8

1. Hitch pin
2. Tow vehicle hitch
3. Clevis

Product Overview

Controls

Engine Stop

Press the Engine Stop button to stop the engine (Figure 9).

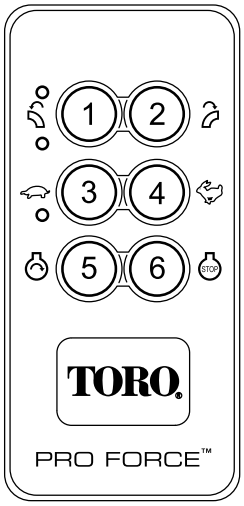

g017705

Figure 9

1. Rotate nozzle left
2. Rotate nozzle right
3. Decrease blower output (Pressing 3 and 4 together returns engine to idle)
4. Increase blower output
5. Engine start
6. Engine stop

Engine Start

After completing the starting sequence, press the Engine Start button to start the engine (Figure 9). Refer to Starting the Engine for the starting sequence.

Nozzle Direction

Press the right or left button to rotate the nozzle to the desired direction (Figure 9).

Engine Speed

Press the Fast (rabbit) or Slow (turtle) button to increase or decrease the speed of the engine (Figure 9).

Ignition Switch

The ignition switch (Figure 10) which is used to start and stop the engine, has three positions: OFF, RUN and START. Rotate key clockwise to the START position to engage the starter motor. Release the key when the engine starts. The key will move automatically to the ON position. To shut engine off, rotate key counterclockwise to the OFF position.

Choke Control

To start a cold engine, move the choke control lever (Figure 10) to the ON position.

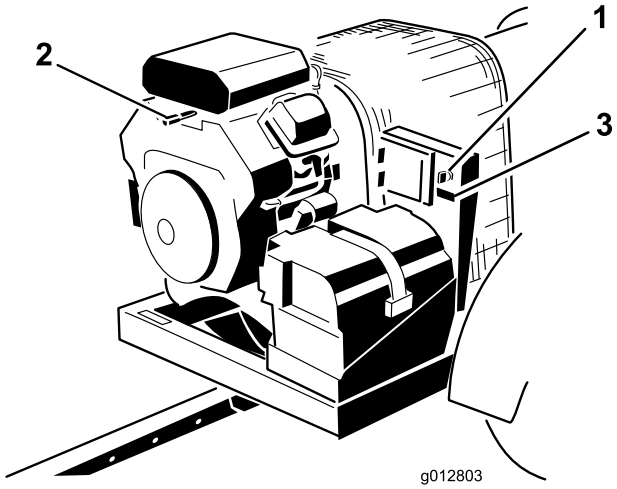

g012803

Figure 10

1. Ignition switch
2. Choke control
3. Hour meter

Hour Meter

The hour meter (Figure 10) indicates the total hours of machine operation.

Operation

Note: Determine the left and right sides of the machine from the normal operating position.

Adding Fuel

- For best results, use only clean, fresh, unleaded gasoline with an octane rating of 87 or higher ((R+M)/2 rating method).
- Oxygenated fuel with up to 10% ethanol or 15% MTBE by volume is acceptable.
- **Do Not** use ethanol blends of gasoline (such as E15 or E85) with more than 10% ethanol by volume. Performance problems and/or engine damage may result which may not be covered under warranty.
- **Do Not** use gasoline containing methanol.
- **Do Not** store fuel either in the fuel tank or fuel containers over the winter unless a fuel stabilizer is used.
- **Do Not** add oil to gasoline.

⚠ DANGER

In certain conditions, gasoline is extremely flammable and highly explosive. A fire or explosion from gasoline can burn you and others and can damage property.

- **Fill the fuel tank outdoors, in an open area, when the engine is cold. Wipe up any gasoline that spills.**
- **Never fill the fuel tank inside an enclosed trailer.**
- **Do not fill the fuel tank completely full. Add gasoline to the fuel tank until the level is 1/4 to 1/2 inch (6 to 13 mm) below the bottom of the filler neck. This empty space in the tank allows gasoline to expand.**
- **Never smoke when handling gasoline, and stay away from an open flame or where gasoline fumes may be ignited by a spark.**
- **Store gasoline in an approved container and keep it out of the reach of children. Never buy more than a 30-day supply of gasoline.**
- **Do not operate without entire exhaust system in place and in proper working condition.**

⚠ DANGER

In certain conditions during fueling, static electricity can be released causing a spark which can ignite the gasoline vapors. A fire or explosion from gasoline can burn you and others and can damage property.

- **Always place gasoline containers on the ground away from your vehicle before filling.**
- **Do not fill gasoline containers inside a vehicle or on a truck or trailer bed because interior carpets or plastic truck bed liners may insulate the container and slow the loss of any static charge.**
- **When practical, remove gas-powered equipment from the truck or trailer and refuel the equipment with its wheels on the ground.**
- **If this is not possible, then refuel such equipment on a truck or trailer from a portable container, rather than from a gasoline dispenser nozzle.**
- **If a gasoline dispenser nozzle must be used, keep the nozzle in contact with the rim of the fuel tank or container opening at all times until fueling is complete.**

⚠ WARNING

Gasoline is harmful or fatal if swallowed. Long-term exposure to vapors can cause serious injury and illness.

- **Avoid prolonged breathing of vapors.**
- **Keep face away from nozzle and gas tank or conditioner opening.**
- **Keep gas away from eyes and skin.**

Using Stabilizer/Conditioner

Use a fuel stabilizer/conditioner in the machine to provide the following benefits:

- Keeps gasoline fresh during storage of 90 days or less. For longer storage it is recommended that the fuel tank be drained.
- Cleans the engine while it runs
- Eliminates gum-like varnish buildup in the fuel system, which causes hard starting

Important: Do not use fuel additives containing methanol or ethanol.

Add the correct amount of gas stabilizer/conditioner to the gas.

Note: A fuel stabilizer/conditioner is most effective when mixed with fresh gasoline. To minimize the chance of varnish deposits in the fuel system, use fuel stabilizer at all times.

Filling the Fuel Tank

1. Shut the engine off.
2. Clean the area around the fuel tank cap and remove the cap (Figure 11).

   Note: The fuel tank cap contains a gauge which shows the fuel level.

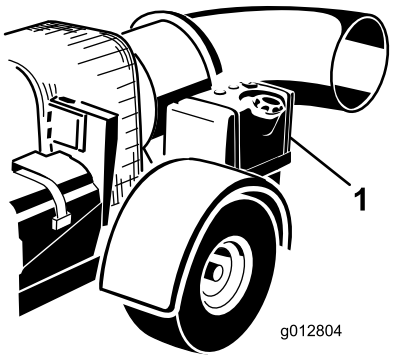

Figure 11

1. Fuel tank

3. Add unleaded regular gasoline to the fuel tank, until the level is 1/4 to 1/2 inch (6 mm to 13 mm) below the bottom of the filler neck.

   This space in the tank allows gasoline to expand. Do not fill the fuel tanks completely full.
4. Install fuel tank cap securely.
5. Wipe up any gasoline that may have spilled.

Checking the Engine Oil Level

Before you start the engine and use the machine, check the oil level in the engine crankcase; refer to Checking the Oil Level.

Checking the Tire Pressure

Check the tire pressure (Figure 12).

The correct tire pressure is 14 psi (96.5 kPa).

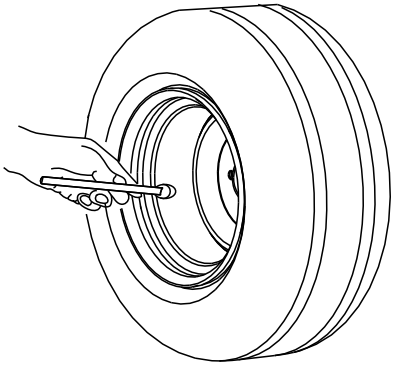

Figure 12

Checking the Torque of the Wheel Lug Nuts

Service Interval: After the first 10 hours

Check the torque of the wheel lug nuts initially and after the first 10 hours of operation.

⚠ WARNING

Failure to maintain proper torque could result in failure or loss of wheel and could result in personal injury. Torque wheel lug nuts to 45-65 ft-lb (5.1-7.3 N-m)

Starting and Stopping the Engine

Starting the Engine

⚠ WARNING

ROTATING PARTS CAN CAUSE SERIOUS PERSONAL INJURY

- **Keep hands and feet away from the machine when it is running.**
- **Keep hands, feet, hair, and clothing away from all moving parts to prevent injury.**
- **NEVER operate the machine with covers, shrouds, or guards removed.**

1. Blower must be attached to the tow vehicle before it can be started.
2. Move the choke control to the ON position before starting a cold engine.

   Note: A warm or hot engine may **not** require choking. After engine starts, move choke control to off position.

3. Rotate the engine ignition key to the "START" position and quickly release it to the "ON" position (Figure 13). This wakes up the receiver .

Note: If the key was left in the on position for an extended time, move the key to the off position before proceeding to the starting procedure.

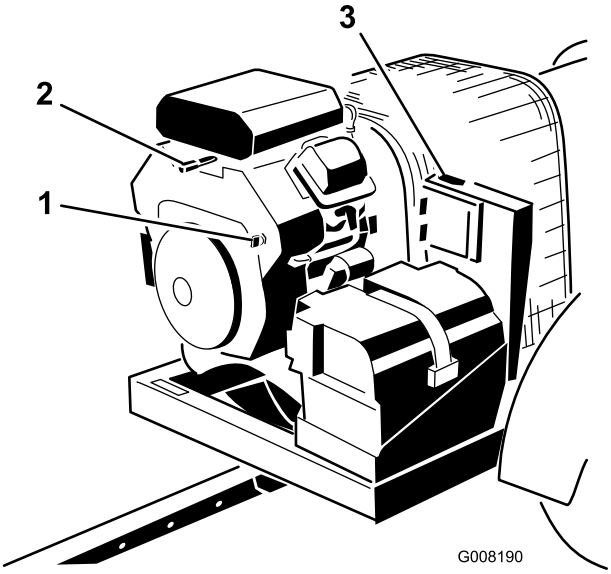

Figure 13

1. Ignition switch
2. Choke control
3. Hour meter

4. Engine Start will only become energized by pressing the Start button while the Engine Start Enable Condition is active. The Engine Start Enable Condition becomes active only when the following Engine Start Enable Sequence has been performed (Figure 14).
   - Press the START button.
   - Then, press the rotate left button.
   - Then, press the rotate right button.
   - Then, press and hold the START button until the engine starts.

   Note: There is a time limit of 3 seconds between each button press. If the next button in the sequence is not press within 3 seconds of the last button press, the sequence is aborted and must be started from the beginning.

   Note: If any button other than the next appropriate button in the sequence is pressed the sequence is aborted.

   Note: If the Start button is not pressed within 25 seconds after pressing the Rotate Right button, or any other button is pressed in this period, the Engine Start Enable Condition expires

   Note: Engine Start Enable Condition persists for 25 seconds after pressing the Rotate Right button allowing momentary activation of Engine Start by pressing the Start button. Pressing the Start button does not extend this time period—the maximum length of time that the Start Relay Control can be active is 25 seconds from pressing the Rotate Right button. The Start button can be pressed multiple times while Engine Start Enable Condition is active. After the Engine Start Enable Condition expires, the Engine Start Enable Sequence must be performed again in order to energize the Start Relay Control with the Start button.

   Note: If the sequence is aborted or the Engine Start Enable Condition expires, normal functionality of the Rotate Right and Left buttons will return to control the Chute Motor.

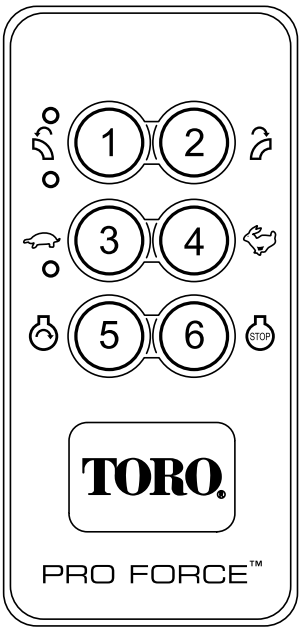

Figure 14

1. Rotate nozzle left
2. Rotate nozzle right
3. Decrease blower output (Pressing 3 and 4 together returns engine to idle)
4. Increase blower output
5. Engine start
6. Engine stop

Important: Do not engage starter for more than 10 seconds at a time. If engine fails to start allow 30 second cool-down period between attempts. Failure to follow these instructions can burn out starter motor.

5. After the engine starts, move the choke control to the off position. If the engine stalls or hesitates, move the choke back to the ON position for a few

seconds, then set the engine speed to the desired setting. Repeat this as required.

Stopping the Engine

1. Decrease the engine speed midway between the slow and fast positions.
2. Let the engine idle for 20 seconds.
3. Press the STOP button on the remote control.
4. If leaving the machine, rotate the key to the OFF position and remove it from the engine (Figure 13).

Start, Stop and Inactivity Time out

The remote control activates (powers up) when any push button is pressed. Blinking TX and RX LEDs indicate that the remote control is alive and communicating with the base unit. To conserve battery power, the remote control stays active for approximately three (3) seconds before automatically shutting down unless there is button activity within the three second limit. When the unit times out and powers down, all remote control LED activity stops (Figure 15). Pressing any button will reactivate the remote control

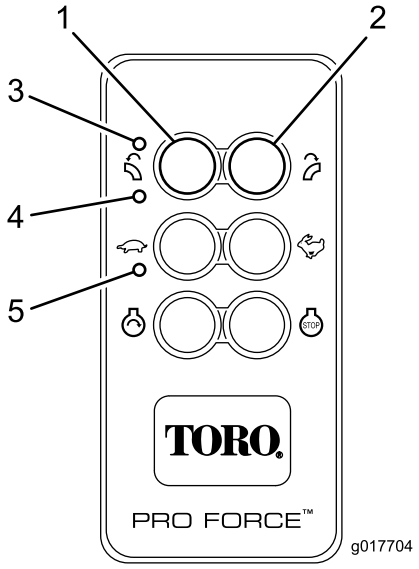

Figure 15

1. Associate
2. Disassociate
3. TX
4. RX
5. LINK

Power Save Mode

The base unit will revert to Power Save Mode — until a power cycle occurs — if the base unit is active for more than 2.5 hours without communication from the remote control. Power Save Mode is a low current state of the base unit. In Power Save Mode, the base unit will not communicate with the remote control, will not activate outputs, and will not generally function as normal.

- When in the time-out mode the engine will not run (or will quit running) and the remote control will not control any function.
- To wake controller in time-out mode, turn the key switch to the OFF position and then turn the key switch to the start position momentarily (engine will turn over).
- To avoid controller time-out during operation, use the remote control to rotate the chute or change the engine speed at least every 2.5 hours.

Adjusting the Nozzle Direction

The direction of the nozzle opening can be changed from right to left by pressing the appropriate button on the remote control (Figure 16).

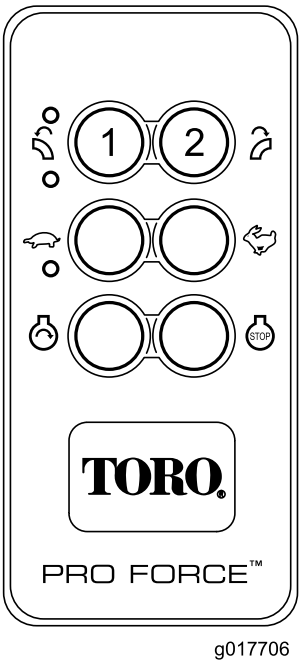

Figure 16

1. Nozzle direction, left
2. Nozzle direction, right

Operating Tips

⚠ WARNING

Discharged air has considerable force and could cause injury or loss of footing.

- **Stay away from nozzle opening when machine is operating.**
- **Keep bystanders away from nozzle opening when machine is running.**

⚠ DANGER

TIP OVER CAN CAUSE SERIOUS INJURY OR DEATH.

- **NEVER operate on steep slopes.**
- **Operate on slopes up and down, never across the face.**
- **When going uphill or downhill, do not stop or start suddenly.**
- **Stay alert for holes in the terrain or other hidden hazards. To avoid tipping or loss of control, do not drive close to a ditch, creek or drop off.**
- **If the tow vehicle stops while going uphill, back slowly downhill. Do not attempt to turn.**

- Never operate the debris blower when it is not connected to a tow vehicle.
- Practice operating the blower. It is advisable to blow the same direction the wind is blowing to prevent material from blowing back into the cleared area.
- Be alert, slow down and use caution when making turns. Look behind and to the side before changing directions.
- Be aware of the blower nozzle direction and do not point it at anyone.
- Use care when approaching blind corners, shrubs, trees, or other objects that may obscure vision.
- Reduce your speed when making sharp turns and when turning on hillsides
- Before backing up, look to the rear and ensure that no one is behind the machine.
- Do not run the engine in or direct the blower nozzle into a confined area without adequate ventilation. Exhaust fumes are hazardous and could possibly be deadly.
- Run the engine at full throttle when operating.
- Adjust the nozzle opening so it blows under the debris.
- Use caution when blowing around newly planted sod as the force of the air could disrupt the grass.
- Do not use on highways.
- Stay away from the nozzle opening when the machine is operating. Keep all bystanders away from the nozzle opening and don't direct discharge toward bystanders.
- If the tow vehicle engine stalls or the machine loses headway and cannot make it to the top of a slope, do not turn the machine around. Always back the tow vehicle slowly straight down the slope.
- **Do not take an injury risk!** When a person or pet appears unexpectedly in or near the operating area, **stop operation.** Careless operation, combined with terrain angles, ricochets, or improperly positioned guards can lead to thrown object injuries. Do not resume operation until the area is cleared.
- Do not exceed 20 mph when transporting blower.
- Do not touch the engine or muffler while the engine is running or soon after it is stopped. These areas could be hot enough to cause a burn.

Important: Raise the nozzle before transporting the blower. If the nozzle is left in the down position during transport, the nozzle may contact the ground and damage to the nozzle may occur.

Note: In the unlikely event of a major static electrical discharge event, the controller may lower the engine speed to low idle. Full speed can be restored by pressing the fast (rabbit) button on remote control.

Maintenance

Recommended Maintenance Schedule(s)

Maintenance Service Interval	Maintenance Procedure
After the first 8 hours	• Check the condition and the tension of the belt
After the first 10 hours	• Check the torque of the wheel lug nuts
Before each use or daily	• Check the engine oil level. • Clean the engine screen and the oil cooler. • Check the nozzle clamp and the nozzle guides
Every 25 hours	• Clean the foam air filter element and check the paper element for damage.
Every 50 hours	• Check the condition and the tension of the belt
Every 100 hours	• Replace the paper air filter element. • Change the engine oil.
Every 200 hours	• Replace the Carbon Canister Air Filter (Service more frequently if conditions are extremely dusty or sandy) • Replace the Carbon Canister Purge-line Filter • Replace the oil filter. • Check the spark plugs.
Every 500 hours	• Replace the fuel filter.

Daily Maintenance Checklist

Duplicate this page for routine use.

Maintenance Check Item	**For the week of:**						
	Mon.	**Tues.**	**Wed.**	**Thurs.**	**Fri.**	**Sat.**	**Sun.**
Check the instrument operation							
Check the fuel level.							
Check the engine oil level.							
Clean the engine air cooling fins.							
Inspect the air filter pre-cleaner.							
Check any unusual engine noises.							
Check for fluid leaks.							
Check the tire pressure.							
Check nozzle mounting clamp torque							
Touch-up damaged paint.							

Notation for Areas of Concern		
Inspection performed by:		
Item	Date	Information

Servicing the Air Cleaner

Service Interval: Every 25 hours—Clean the foam air filter element and check the paper element for damage.

Every 100 hours—Replace the paper air filter element.

Note: Service the air cleaner more frequently if operating conditions are extremely dusty or sandy.

Removing the Filters

1. Clean around the air cleaner to prevent dirt from getting into the engine and causing damage.
2. Unscrew the knob and remove the air cleaner cover (Figure 17).

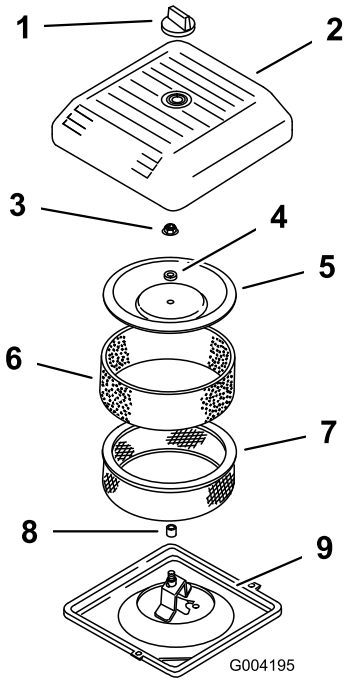

Figure 17

1. Knob
2. Air cleaner cover
3. Cover nut
4. Spacer
5. Cover
6. Foam pre-filter
7. Paper filter
8. Rubber seal
9. Air cleaner base

3. Carefully slide the foam pre-filter off of the paper element (Figure 17).
4. Unscrew the cover nut and remove the cover, spacer and paper filter (Figure 17).

Cleaning the Foam Pre-filter

Important: Replace the foam element if it is torn or worn.

1. Wash the foam pre-filter in liquid soap and warm water. When clean, rinse it thoroughly.
2. Dry the pre-filter by squeezing it in a clean cloth (do not wring).
3. Put one or two ounces (29.6 or 59.1 ml) of oil on the pre-filter (Figure 18).

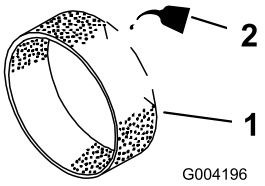

Figure 18

1. Foam element
2. Oil

4. Squeeze the pre-filter to distribute the oil.
5. Inspect the paper filter for tears, an oily film, and damage to the rubber seal (Figure 19).

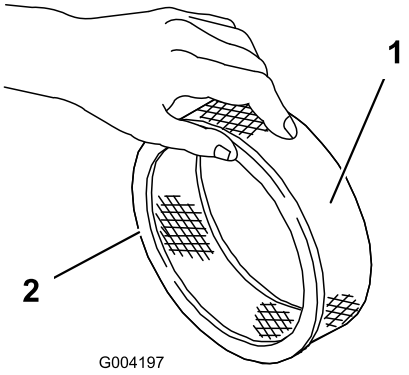

Figure 19

1. Paper element
2. Rubber seal

Important: Never clean the paper element. Replace the paper element if it is dirty or damaged (i.e., after approximately 100 operating hours).

Installing the Filters

Important: To prevent engine damage, always operate the engine with the complete foam and paper air cleaner assembly installed.

1. Carefully slide the foam pre-filter onto the paper filter (Figure 19).
2. Place the air cleaner assembly onto the air cleaner base (Figure 17).

3. Install the cover, spacer and secure it with the cover nut (Figure 17). Torque the nut to 95 in-lb (10.7 N-m).
4. Install the air cleaner cover and secure with the knob (Figure 17).

Servicing the Carbon Canister

Replacing the Carbon Canister Air Filter

Service Interval: Every 200 hours

1. Stop the engine, remove the key, and wait for all moving parts to stop before leaving the operating position.
2. Remove and discard the carbon canister air filter (Figure 20).

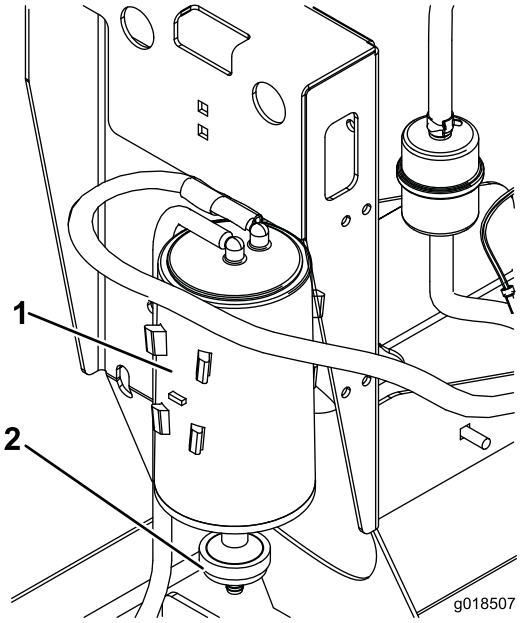

Figure 20

1. Carbon canister
2. Carbon canister air filter

3. Install the new air filter.

Replacing the Carbon Canister Purge-line Filter

Service Interval: Every 200 hours

Note: Check the purge-line filter occasionally for dirt. If the filter appears to be dirty, replace it.

1. Stop the engine, remove the key, and wait for all moving parts to stop before leaving the operating position.
2. Move the spring-type hose clamps on both sides of the carbon canister purge-line filter away from the filter (Figure 21).

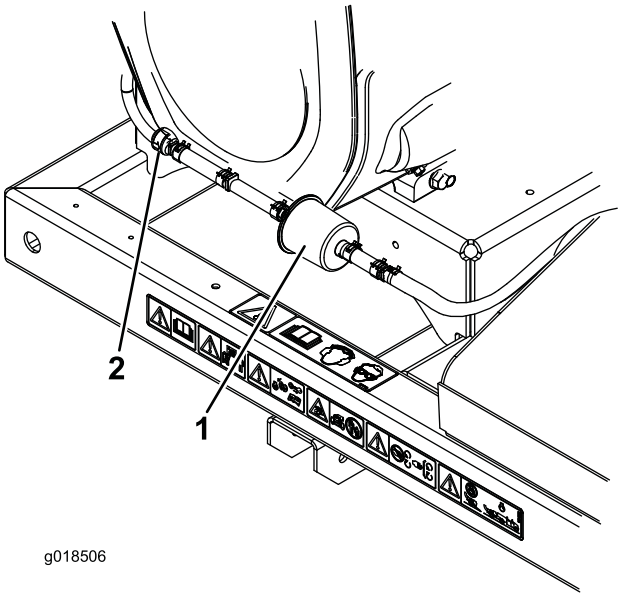

Figure 21

1. Carbon canister purge-line filter
2. Check valve

3. Remove and discard the carbon filter (Figure 21).
4. Install a new filter into the hose with the arrow on the filter pointing towards the check valve and secure it with the hose clamps (Figure 21).

Servicing the Engine Oil

Note: Change the oil more frequently when the operating conditions are extremely dusty or sandy.

Oil Type: Detergent oil (API service SG, SH, SJ or higher)

Crankcase Capacity: w/filter, 67 ounces (2 l)

Viscosity: See the table below.

USE THESE SAE VISCOSITY OILS

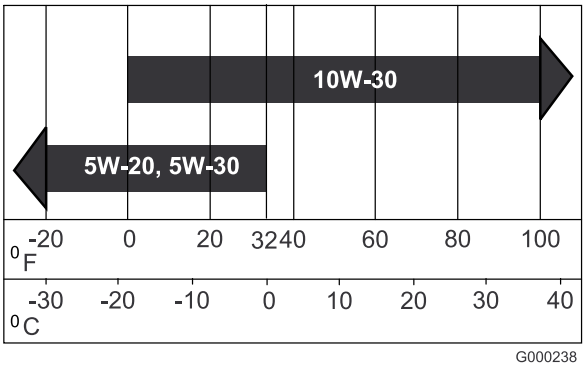

Figure 22

Checking the Engine Oil Level

Service Interval: Before each use or daily

Note: The best time to check the engine oil is when the engine is cool before it has been started for the day. If it has already been run, allow the oil to drain back down to the sump for at least 10 minutes before checking. If the oil level is at or below the 'add' mark on the dipstick, add oil to bring the oil level to the 'full' mark. DO NOT OVERFILL. If the oil level is between the 'full' and 'add' marks, no oil addition is required.

1. Park the machine on a level surface.
2. Turn the ignition key to off, and remove the key.
3. Clean around the oil dipstick (Figure 23) so that dirt cannot fall into the filler hole and damage the engine.

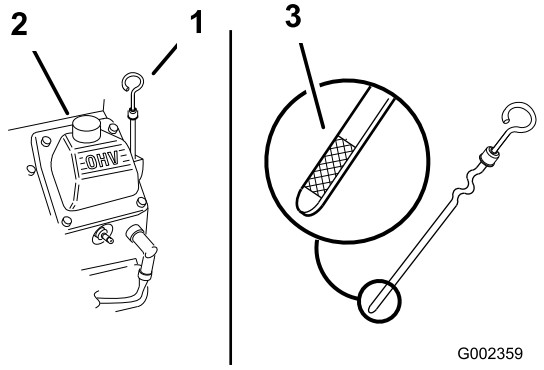

Figure 23

1. Oil dipstick
2. Filler tube

4. Unscrew the oil dipstick and wipe the end clean (Figure 23).
5. Slide the oil dipstick fully into the filler tube, but do not thread onto tube (Figure 23).
6. Pull the dipstick out and look at the metal end. If the oil level is low, slowly pour only enough oil into the filler tube to raise the level to the Full mark.

   Important: Do not overfill the crankcase with oil and run the engine. Engine damage can result.

Changing the Oil

Service Interval: Every 100 hours

1. Start the engine and let it run five minutes. This warms the oil so it drains better.
2. Park the machine so that the drain side is slightly lower than the opposite side to ensure the oil drains completely.
3. Stop the engine, remove the key, and wait for all moving parts to stop before leaving the operating position.
4. Place a pan below the drain. Rotate oil drain valve to allow oil to drain (Figure 24).

   Note: A hose may be inserted onto the drain valve to direct the oil flow. The hose is not included with the machine.
5. When oil has drained completely, close the drain valve.

   Note: Dispose of the used oil at a recycling center.

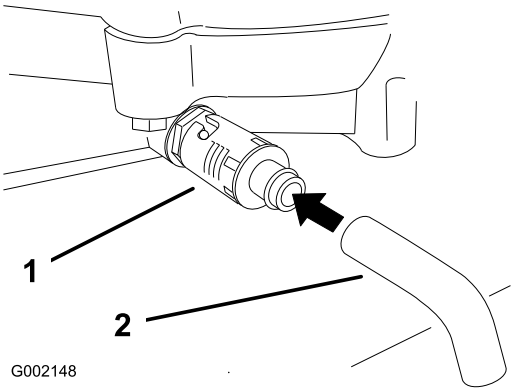

Figure 24

1. Oil drain valve
2. Oil drain hose (**Not included**)

6. Slowly pour approximately 80% of the specified oil into the filler tube (Figure 23).
7. Check the oil level; refer to Checking the Engine Oil Level.
8. Slowly add the additional oil to bring it to the **Full** mark.

Changing the Oil Filter

Service Interval: Every 200 hours

Note: Change the oil filter more frequently when the operating conditions are extremely dusty or sandy.

1. Drain the oil from the engine; refer to Changing the Engine Oil.
2. Remove the old filter and wipe the filler adapter gasket surface (Figure 25).

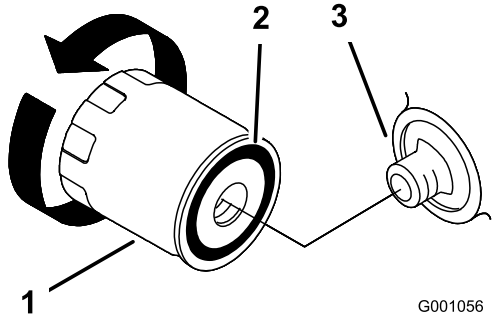

Figure 25

1. Oil filter
2. Adapter gasket
3. Adapter

3. Apply a thin coat of new oil to the rubber gasket on the replacement filter (Figure 25).
4. Install the replacement oil filter to the filter adapter, turn the oil filter clockwise until the rubber gasket contacts the filter adapter, then tighten the filter an additional 2/3 to 1 turn (Figure 25).
5. Fill the crankcase with the proper type of new oil; refer to Servicing the Engine Oil.
6. Run the engine for about 3 minutes, stop the engine, and check for oil leaks around the oil filter.
7. Check the engine oil level and add oil if needed.

Associate Remote Control and Base Unit

Important: Make sure to read the entire procedure before attempting the Association process.

The remote control must establish communications with the base unit before the system can be used. The remote control is associated to the system base unit before leaving the factory. This is done using the Associate procedure. In situations where it is necessary to re-establish remote control-to-base unit communications (example: introducing a new or spare remote control to an existing base unit), the following Associate procedure must be performed.

Note: Associating the remote control to a different base unit will disassociate that remote control from the original base unit.

1. Remove power from the base unit.
2. Stand near the base unit in unobstructed, clear line-of-sight with the remote control in hand.
3. Simultaneously press and hold the Associate and Disassociate buttons. TX lights steady Green.
4. Continue to hold both buttons until the LINK LED begins flashing Amber.

   Note: If the flashing LINK LED goes solid, the Association procedure is aborted and must be started anew to establish the communication link.
5. When the LINK LED flashes Amber, release the two buttons. All three LEDs flash allowing two (2) seconds for the operator to perform the next step.

   Note: If the next button press is not performed within the two second, the Association procedure is aborted and must be started anew to establish the communication link.
6. Press and hold the Associate button. The RX LED goes out, the TX LED lights steady green, and the LINK LED lights steady amber.
7. Apply power to the base unit while continuing to hold the Associate button.

   The remote control and base unit begin to establish a communication link while the Associate button is held. Once the process is complete, the Amber LINK LED remains solid, the RX LED stops flashing Red and the TX LED lights steady Green (button being held) until the button is released, upon which time TX begins flashing Green indicating that the remote control is transmitting.
8. Release the Associate button.

   RX extinguishes and TX flashes Green for a brief time and then it too goes out.

   The system is ready for use with that particular remote control.

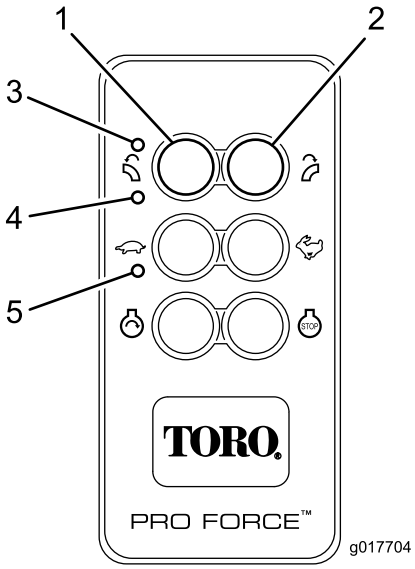

Figure 26

1. Associate
2. Disassociate
3. TX
4. RX
5. LINK

Servicing the Spark Plugs

Ensure that the air gap between the center and side electrodes is correct before installing the spark plug. Use a spark plug wrench for removing and installing the spark plugs and a gapping tool/feeler gauge to check and adjust the air gap. Install a new spark plugs if necessary.

Type: Champion® RC12YC, Champion® Platinum 3071 or equivalent

Air Gap: 0.030 inch (0.76 mm)

Checking the Spark Plugs

Service Interval: Every 200 hours

1. Look at the center of the spark plugs (Figure 27). If you see light brown or gray on the insulator, the engine is operating properly. A black coating on the insulator usually means that the air cleaner is dirty.

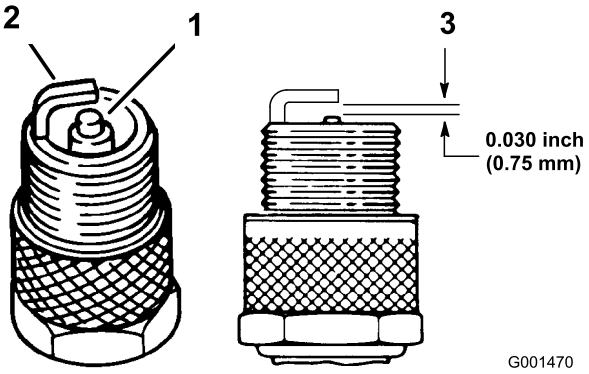

Figure 27

1. Center electrode insulator
2. Side electrode
3. Air gap (not to scale)

Important: Always replace the spark plugs when it has a black coating, worn electrodes, an oily film, or cracks.

2. Check the gap between the center and side electrodes (Figure 27). Bend the side electrode (Figure 27) if the gap is not correct.

Removing the Spark Plugs

1. Stop the engine, remove the key, and wait for all moving parts to stop before leaving the operating position.
2. Disconnect the wires from the spark plugs (Figure 28).

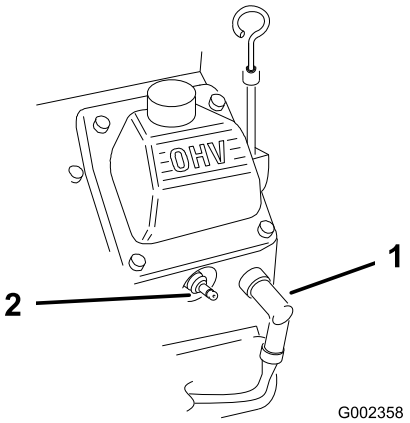

Figure 28

1. Spark-plug wire
2. Spark plug

3. Clean around the spark plugs to prevent dirt from falling into the engine and potentially causing damage.
4. Remove the spark plugs and the metal washers.

Installing the Spark Plugs

1. Install the spark plugs and the metal washer. Ensure that the air gap is set correctly.
2. Tighten the spark plugs to 18 to 22 ft-lb (24.4 to 29.8 N-m).
3. Connect the wires to the spark plugs (Figure 27).

Replacing the Fuel Filter

Service Interval: Every 500 hours

Never install a dirty filter if it is removed from the fuel line.

1. Stop the engine, remove the key, and wait for all moving parts to stop before leaving the operating position.
2. Allow the machine to cool down.
3. Squeeze the ends of the hose clamps together and slide them away from the filter (Figure 29).

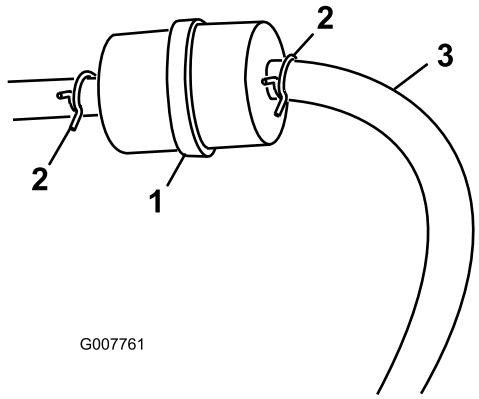

Figure 29

1. Fuel filter
2. Hose clamp

4. Remove the filter from the fuel lines.
5. Install a new filter and move the hose clamps close to the filter (Figure 29).

Servicing the Fuel Tank

⚠ DANGER

In certain conditions, gasoline is extremely flammable and highly explosive. A fire or explosion from gasoline can burn you and others and can damage property.

- **Drain gasoline from the fuel tank when the engine is cold. Do this outdoors in an open area. Wipe up any gasoline that spills.**
- **Never smoke when draining gasoline, and stay away from an open flame or where a spark may ignite the gasoline fumes.**

1. Park the machine on a level surface to ensure that the fuel tanks drain completely.
2. Stop the engine and remove the key.
3. Loosen the hose clamp at the fuel filter and slide it up the fuel line away from the fuel filter (Figure 29).
4. Disconnect the fuel line from the fuel filter (Figure 29).

   Note: Allow gasoline to drain into a fuel container can or drain pan (Figure 29).

   Note: This is the best time to install a new fuel filter because the fuel tank is empty.
5. Install the fuel line onto the fuel filter. Slide the hose clamp close to the fuel filter to secure the fuel line (Figure 29).

Cleaning the Engine Screen and the Oil Cooler

Service Interval: Before each use or daily

Before each use, check and clean the engine screen and oil cooler. Remove any build up of grass, dirt or other debris from the oil cooler and engine screen (Figure 30).

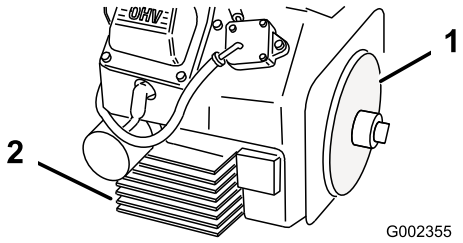

Figure 30

1. Engine screen
2. Oil cooler

Checking the Nozzle

Service Interval: Before each use or daily

Checking the Nozzle Clamp

Check the nozzle clamp (Figure 31) daily to assure it is tight. If the nozzle is dragged over obstacles or through low areas in the terrain it could be knocked loose from the clamp. Torque the clamp fasteners to 45-50 in-lb (5.1-5.7 N-m).

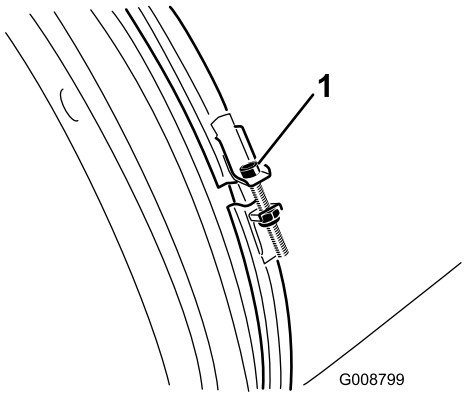

Figure 31

1. Nozzle clamp

Cleaning the Nozzle Guides

Check and remove any grass, dirt or debris buildup around and in between the nozzle guides (Figure 32). If the nozzle guides are not keep free of debris, the nozzle may not rotate freely which could cause the motor to stall.

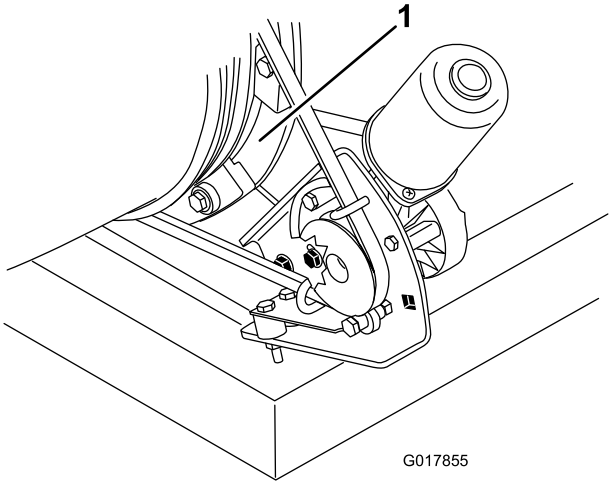

Figure 32

1. Nozzle guides

Adjusting the Belt

Service Interval: After the first 8 hours

Every 50 hours

If the belt slips when changing the direction of the nozzle, an adjustment to the belt is required.

1. Loosen the bolts securing the pulley mounting bracket to the blower frame (Figure 33).

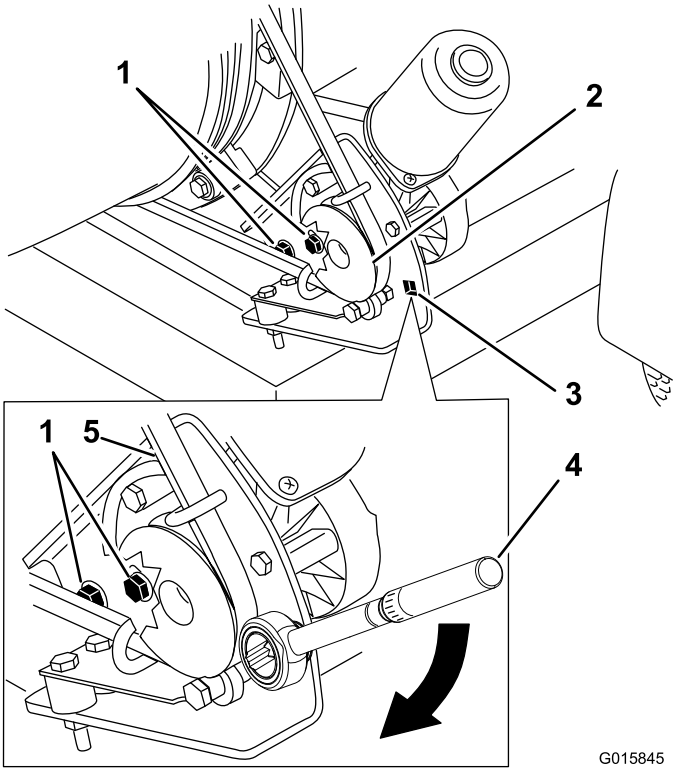

Figure 33

1. Mounting bolts
2. Pulley
3. Hole for torque wrench
4. Torque wrench in pulley mounting bracket [200 to 230 in-lb (22.6 to 26.0 N-m)]
5. Belt

2. Position a torque wrench into the pulley mounting bracket (Figure 33).
3. Pivot the pulley mounting bracket away from the nozzle until the torque wrench reads 200 to 230 in-lb (22.6 to 26.0 N-m) (Figure 33).
4. Tighten the mounting bolts.

Electrical Maintenance

Important: Before welding on the machine, disconnect the controller and the negative cable from the battery to prevent damage to the electrical system.

Remote Control Battery Installation/Change

Remote control units are powered by three size AAA batteries. When installing batteries, be sure to observe proper polarity as marked on the inside of the compartment to avoid damaging the unit. To replace or install batteries in the remote control:

1. Remove the four small Phillips screws from the Battery Compartment cover and lift the cover from the remote control.
2. If installing batteries in an empty battery compartment, install three fresh size AAA batteries. Be sure to position the batteries as shown in Figure 34.
3. If replacing expired batteries, remove the old batteries and install three fresh size AAA batteries. Be sure to position the batteries as shown in Figure 34.
4. Replace the compartment cover and tighten the four Phillips screws. These screws should not be over-tightened, but they should be tight enough to assure the gasket provides a proper seal.

   Note: Be sure to observe proper polarity when placing batteries in the remote control battery compartment.

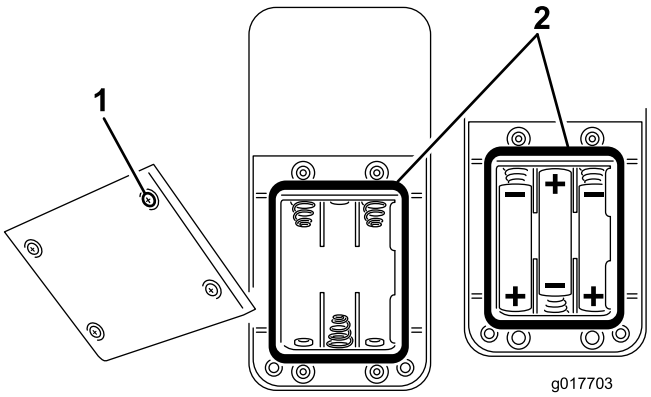

Figure 34

1. Cover screw
2. Sealing gasket

Fuses

Engine

A 15 amp in-line fuse is incorporated into the engine wire harness (Figure 35).

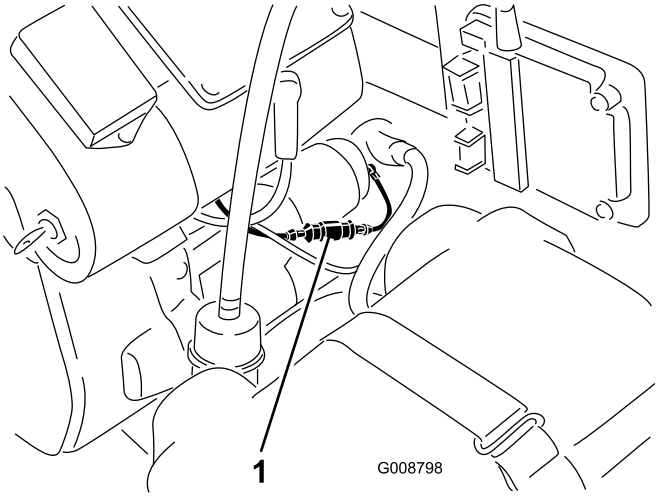

Figure 35

1. Fuse
2. Receiver

Receiver

A 15 amp in-line fuse is incorporated into the receiver wire harness. It is located behind the receiver on the back side of control tower (Figure 35).

Storage

1. Turn the key to off. Remove spark plug wire. Remove the key.
2. Remove grass clippings, dirt, and grime from the external parts of the entire machine, especially the engine. Clean dirt and chaff from the outside of the engine's cylinder head fins and blower housing.

   Important: You can wash the machine with mild detergent and water. Do not pressure wash the machine. Avoid excessive use of water.
3. Service the air cleaner; refer to Servicing the Air Cleaner.
4. Change the crankcase oil; refer to Servicing the Engine Oil.
5. Check the tire pressure; refer to Checking the Tire Pressure.
6. Charge the battery; refer to Servicing the Battery.
7. Prepare the machine for storage when non use occurs over 30 days. Prepare machine for storage as follows.
   A. Add a petroleum based stabilizer/conditioner to fuel in the tank. Follow mixing instructions from stabilizer manufacture. Do not use an alcohol based stabilizer (ethanol or methanol).

      Note: A fuel stabilizer/conditioner is most effective when mixed with fresh gasoline and used at all times.

   B. Run engine to distribute conditioned fuel through the fuel system (5 minutes).
   C. Stop engine, allow to cool and drain the fuel tank; refer to Servicing the Fuel Tank.
   D. Restart engine and run it until it stops.
   E. Choke the engine. Start and run engine until it will not start.
   F. Dispose of fuel properly. Recycle as per local codes.

   Important: Do not store stabilizer/conditioned gasoline over 90 days.
8. Remove the spark plug(s) and check its condition; refer to Servicing the Spark Plugs. With the spark plug(s) removed from the engine, pour two tablespoons of engine oil into the spark plug hole. Now use the starter to crank the engine and distribute the oil inside the cylinder. Install the spark plug(s). Do not install the wire on the spark plug(s).
9. Check and tighten all bolts, nuts, and screws. Repair or replace any part that is damaged or defective.
10. Paint all scratched or bare metal surfaces. Paint is available from your Authorized Service Dealer.
11. Store the machine in a clean, dry garage or storage area. Remove the key from the ignition switch and keep it out of reach of children or other unauthorized users. Cover the machine to protect it and keep it clean.

Waste Disposal

Engine oil, engine and remote control batteries are pollutants to the environment. Dispose of these according to your state and local regulations.

Schematics

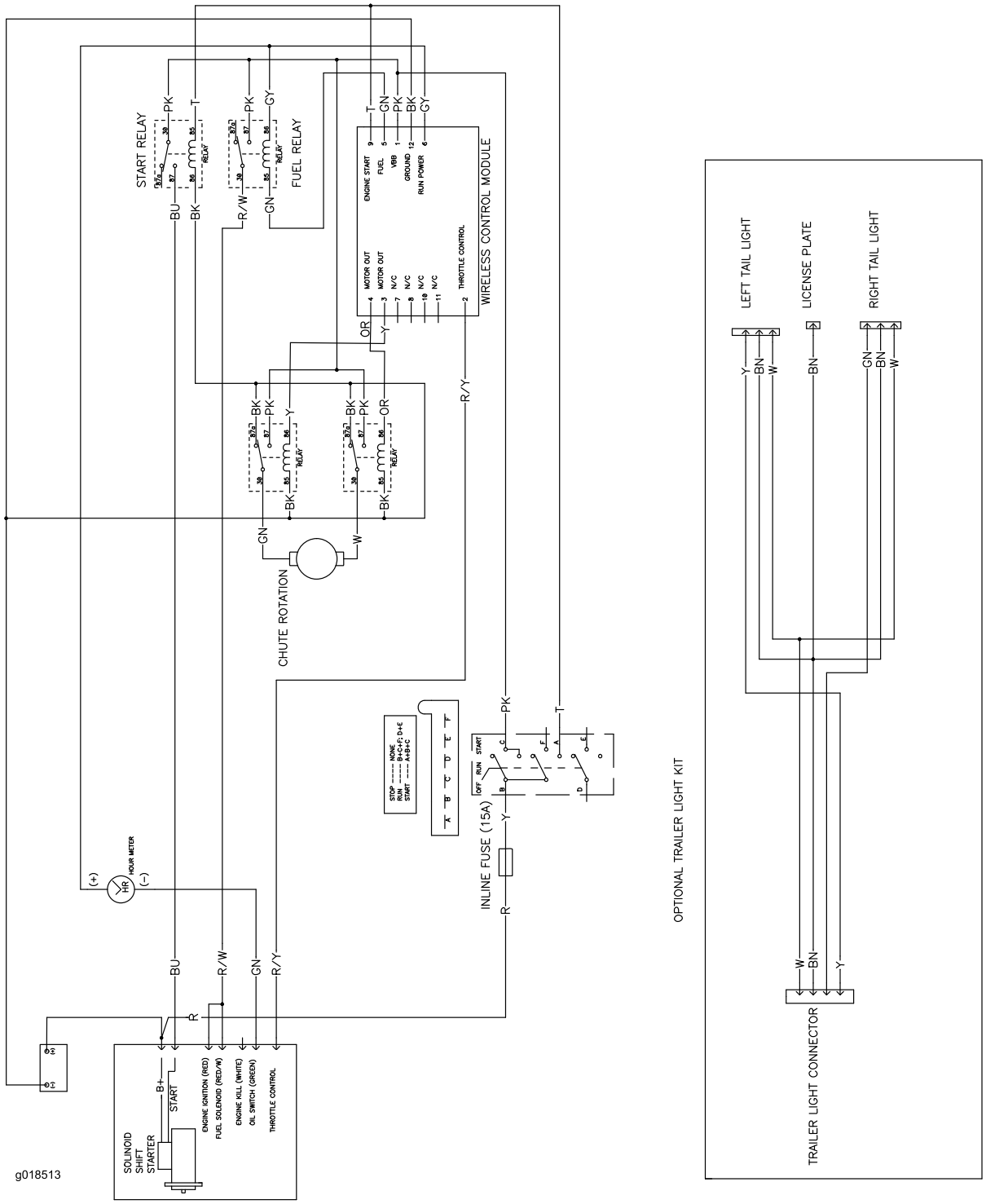

Electrical Schematic (Rev. C)

Notes:

Notes:

The Toro Total Coverage Guarantee

A Limited Warranty

Conditions and Products Covered

The Toro Company and its affiliate, Toro Warranty Company, pursuant to an agreement between them, jointly warrant your Toro Commercial product ("Product") to be free from defects in materials or workmanship for two years or 1500 operational hours*, whichever occurs first. This warranty is applicable to all products with the exception of Aerators (refer to separate warranty statements for these products). Where a warrantable condition exists, we will repair the Product at no cost to you including diagnostics, labor, parts, and transportation. This warranty begins on the date the Product is delivered to the original retail purchaser.
* Product equipped with an hour meter.

Instructions for Obtaining Warranty Service

You are responsible for notifying the Commercial Products Distributor or Authorized Commercial Products Dealer from whom you purchased the Product as soon as you believe a warrantable condition exists. If you need help locating a Commercial Products Distributor or Authorized Dealer, or if you have questions regarding your warranty rights or responsibilities, you may contact us at:

Toro Commercial Products Service Department
Toro Warranty Company
8111 Lyndale Avenue South
Bloomington, MN 55420-1196

952–888–8801 or 800–952–2740
E-mail: commercial.warranty@toro.com

Owner Responsibilities

As the Product owner, you are responsible for required maintenance and adjustments stated in your *Operator's Manual*. Failure to perform required maintenance and adjustments can be grounds for disallowing a warranty claim.

Items and Conditions Not Covered

Not all product failures or malfunctions that occur during the warranty period are defects in materials or workmanship. This warranty does not cover the following:

- Product failures which result from the use of non-Toro replacement parts, or from installation and use of add-on, or modified non-Toro branded accessories and products. A separate warranty may be provided by the manufacturer of these items.
- Product failures which result from failure to perform recommended maintenance and/or adjustments. Failure to properly maintain your Toro product per the Recommended Maintenance listed in the *Operator's Manual* can result in claims for warranty being denied.
- Product failures which result from operating the Product in an abusive, negligent, or reckless manner.
- Parts subject to consumption through use unless found to be defective. Examples of parts which are consumed, or used up, during normal Product operation include, but are not limited to, brake pads and linings, clutch linings, blades, reels, rollers and bearings (sealed or greasable), bed knives, spark plugs, castor wheels and bearings, tires, filters, belts, and certain sprayer components such as diaphragms, nozzles, and check valves, etc.
- Failures caused by outside influence. Conditions considered to be outside influence include, but are not limited to, weather, storage practices, contamination, use of unapproved fuels, coolants, lubricants, additives, fertilizers, water, or chemicals, etc.
- Failure or performance issues due to the use of fuels (e.g. gasoline, diesel, or biodiesel) that do not conform to their respective industry standards.
- Normal noise, vibration, wear and tear, and deterioration.
- Normal "wear and tear" includes, but is not limited to, damage to seats due to wear or abrasion, worn painted surfaces, scratched decals or windows, etc.

Parts

Parts scheduled for replacement as required maintenance are warranted for the period of time up to the scheduled replacement time for that part. Parts replaced under this warranty are covered for the duration of the original product warranty and become the property of Toro. Toro will make the final decision whether to repair any existing part or assembly or replace it. Toro may use remanufactured parts for warranty repairs.

Deep Cycle and Lithium-Ion Battery Warranty:

Deep cycle and Lithium-Ion batteries have a specified total number of kilowatt-hours they can deliver during their lifetime. Operating, recharging, and maintenance techniques can extend or reduce total battery life. As the batteries in this product are consumed, the amount of useful work between charging intervals will slowly decrease until the battery is completely worn out. Replacement of worn out batteries, due to normal consumption, is the responsibility of the product owner. Battery replacement may be required during the normal product warranty period at owner's expense. Note: (Lithium-Ion battery only): A Lithium-Ion battery has a part only prorated warranty beginning year 3 through year 5 based on the time in service and kilowatt hours used. Refer to the *Operator's Manual* for additional information.

Maintenance is at Owner's Expense

Engine tune-up, lubrication, cleaning and polishing, replacement of filters, coolant, and completing recommended maintenance are some of the normal services Toro products require that are at the owner's expense.

General Conditions

Repair by an Authorized Toro Distributor or Dealer is your sole remedy under this warranty.

Neither The Toro Company nor Toro Warranty Company is liable for indirect, incidental or consequential damages in connection with the use of the Toro Products covered by this warranty, including any cost or expense of providing substitute equipment or service during reasonable periods of malfunction or non-use pending completion of repairs under this warranty. Except for the Emissions warranty referenced below, if applicable, there is no other express warranty. All implied warranties of merchantability and fitness for use are limited to the duration of this express warranty.

Some states do not allow exclusions of incidental or consequential damages, or limitations on how long an implied warranty lasts, so the above exclusions and limitations may not apply to you. This warranty gives you specific legal rights, and you may also have other rights which vary from state to state.

Note regarding engine warranty:

The Emissions Control System on your Product may be covered by a separate warranty meeting requirements established by the U.S. Environmental Protection Agency (EPA) and/or the California Air Resources Board (CARB). The hour limitations set forth above do not apply to the Emissions Control System Warranty. Refer to the Engine Emission Control Warranty Statement supplied with your product or contained in the engine manufacturer's documentation for details

Countries Other than the United States or Canada

Customers who have purchased Toro products exported from the United States or Canada should contact their Toro Distributor (Dealer) to obtain guarantee policies for your country, province, or state. If for any reason you are dissatisfied with your Distributor's service or have difficulty obtaining guarantee information, contact the Toro importer.