FORM NO. 3318–678 REV. A

TORO®

MODEL NO. 38590–7900001 & UP
MODEL NO. 38591–7900001 & UP

PARTS CATALOG

1232 POWER SHIFT®
SNOWTHROWER

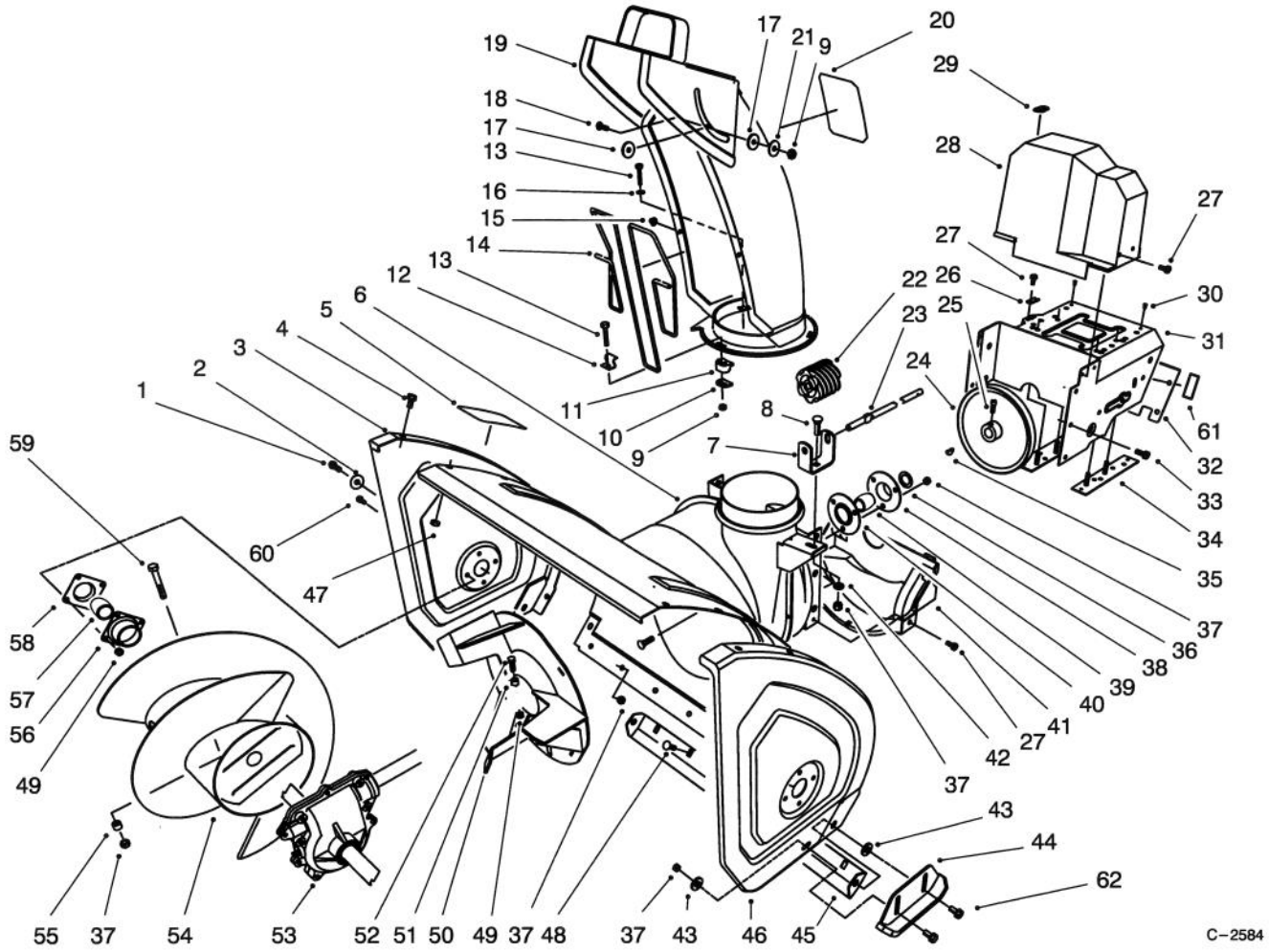

HOUSING ASSEMBLY

Ref. No.	Part No.	Description	No. Used
1	323–6	Screw – Hex Hd.	2
2	3–0750	Washer – Retaining	2
3	66–7821	Plate – Side R.H.	1
4	3234–28	Screw – Hex Flange Hd.	12
5	53–7670	Decal – Warning Auger (Model 38590 Only)	1
*	94–2568	Decal – Warning Auger (Model 38591 Only)	1
6	62–0722	Housing – 32"	1
7	63–2180	Bracket – Gear	1
8	3230–2	Bolt – Carriage	1
9	3296–2	Nut – Lock	4
10	63–2670	Plate – Chute Retainer	3
11	62–1430	Retainer – Chute	3
12	63–3130	Clip – Chute Guard	1
13	3274–13	Screw – Machine	3
14	63–3020	Guard – Chute	1

Ref. No.	Part No.	Description	No. Used
15	3290–326	Nut – Push	2
16	3256–14	Washer – Flat	1
17	63–2900	Washer – Plastic	2
18	32122–32	Screw	1
19	62–0840	Chute Assembly	1
20	94–8079	Decal – Danger Chute (Model 38590 Only)	1
*	94–2559	Decal – Danger Chute (Model 38591 Only)	1
21	3256–61	Washer – Flat	1
22	62–0820	Gear – Worm	1
23	62–1720	Rod – Chute Gear	1
24	62–1300	Pulley – Impeller	1
25	3242–4	Screw – Set Sq. Hd.	2
26	63–2300	Retainer – Cable	1
27	32144–4	Screw – Hex Flange Hd.	6

*Not Illustrated

© The TORO Company –1996
All Rights Reserved

TPS

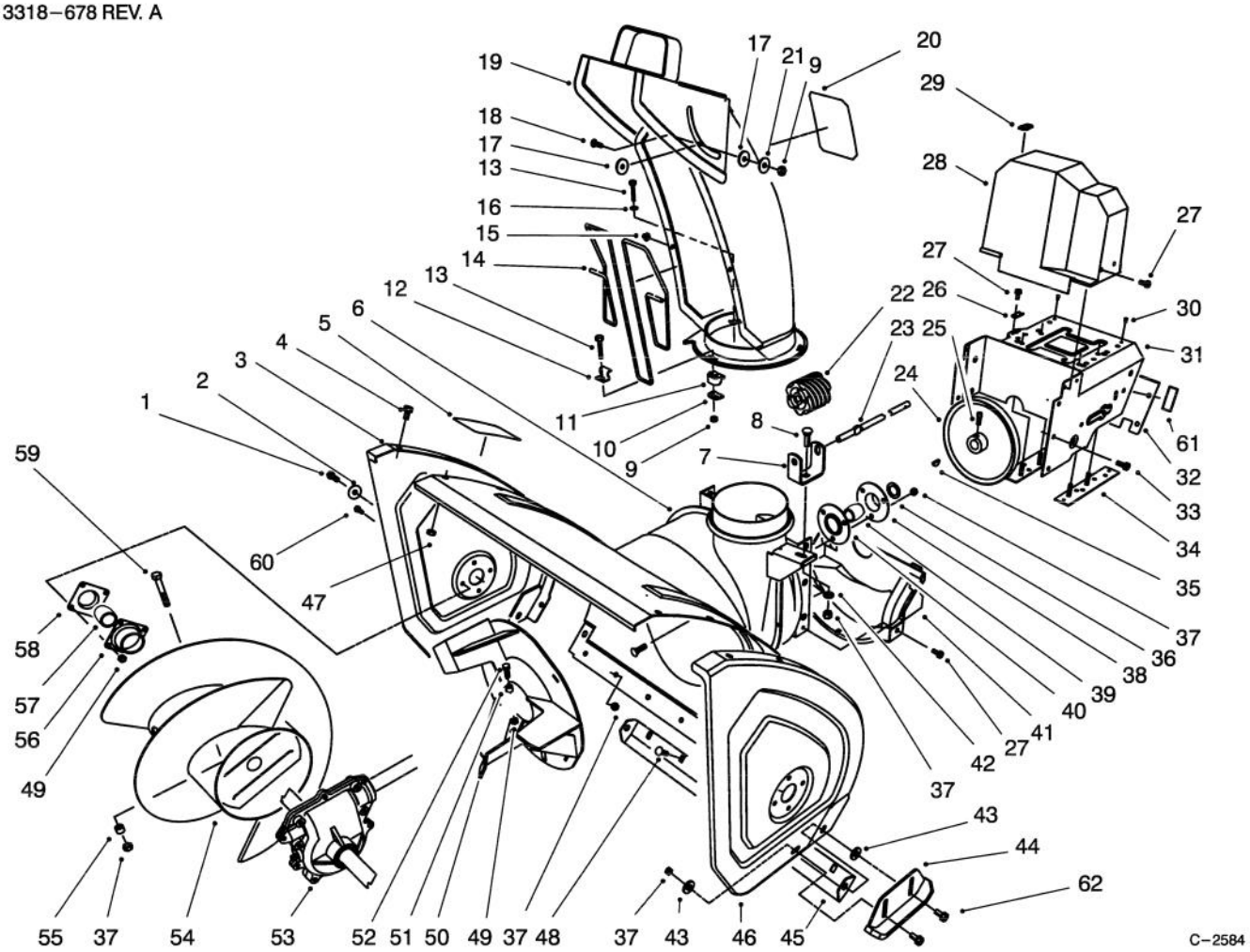

HOUSING ASSEMBLY (Continued)

Ref. No.	Part No.	Description	No. Used
28	63–2080	Cover – Belt (Upper)	1
29	63–3290	Cover – Cable	10
30	269–23	Rivet	4
31	66–6980	Frame – Engine	1
32	62–1440	Cover – Engine Frame	1
33	3234–7	Screw	6
34	66–4110	Plate – L.H.	1
*	66–4100	Plate – R.H.	1
35	3257–23	Key – Woodruff	1
36	252–80	Washer – Thrust	1
37	3296–29	Nut – Lock	16
38	26–6120	Flange – Bearing (Rear)	1
39	63–3450	Bearing – Impeller	1
40	26–6110	Flange – Bearing (Front)	1
41	68–8410	Cover – Belt (Lower)	1
42	3256–23	Washer – Flat	1
43	52–2861	Washer	4
44	74–1440	Skid Assembly	2
45	66–7760	Blade – Scraper	1
46	66–7831	Plate – Side L.H.	1

Ref. No.	Part No.	Description	No. Used
47	3296–47	Nut – Lock	12
48	3230–23	Screw – Carriage	11
49	3296–42	Nut – Lock	10
50	66–7920	Impeller	1
51	66–8010	Spacer	2
52	321–44	Screw – Hex. Hd.	2
53	74–1562	Auger Gearbox Assembly	1
54	68–7452	Auger – R.H.	1
*	68–7462	Auger – L.H.	1
55	25–5090	Spacer – Auger Hub	2
56	20–0990	Flange – Bearing (Inner)	2
57	20–0980	Bearing – Auger	2
58	20–1000	Flange – Bearing (Outer)	2
59	322–12	Bolt – Auger	2
60	321–3	Screw – Hex Hd.	8
61	68–9390	Decal – Differential (Model 38590 Only)	1
62	3234–5	Screw – Hex Washer Hd.	4
*	12–8789	Impeller Bearing Assembly (Incl. Ref. #38–40)	1

*Not Illustrated

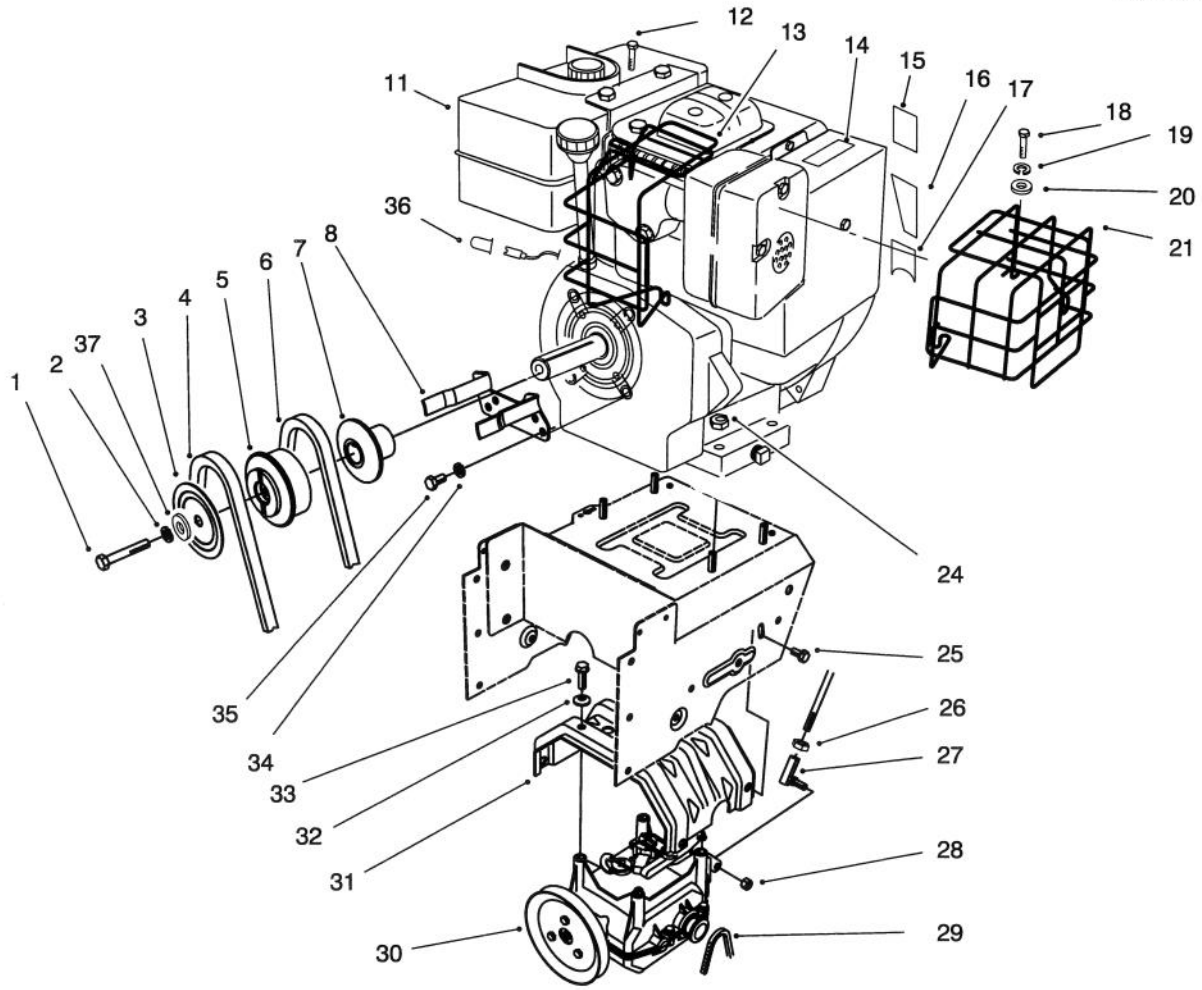

C–2585

ENGINE, TRANSMISSION DRIVE ASSEMBLY

Ref. No.	Part No.	Description	No. Used
1	3212–8	Screw – Hex. Hd.	1
2	3253–6	Washer – Lock	1
3	62–0940	Sheave Half – Impeller	1
4	63–2967	Belt – Impeller	1
5	62–0930	Hub – Sheave	1
6	63–2955	Belt – Traction	1
7	62–0920	Sheave Half – Traction	1
8	68–7510	Guide – Belt	1
†11		Engine – Tecumseh Model OHS120–222023/24F	1
†12	42–657	Screw / Washer, Model 38591	1
†13	127–21	Guard–Muffler, Model 38591	1
14	66–6840	Decal – Hot, Model 38590	1
*	93–1265	Decal – Hot , Model 38591	1
15	94–2572	Decal – Primer	1
16	63–2450	Decal – Throttle	1
17	63–2410	Decal – Choke Model 38591	1
*	63–2400	Decal – Choke, Model 38590	1
†18	42–671	Screw/Washer, Model 38591	5

Ref. No.	Part No.	Description	No. Used
†19	36–180	Washer – Lock, Model 38591	5
†20	32–251–1	Washer – Flat, Model 38591	5
†21	127–24	Guard–Muffler, Model 38591	1
24	32128–20	Nut – Lock	4
25	3234–7	Screw – Hex Flange Hd.	4
26	3220–3	Nut – Lock	1
27	78–2920	Joint– Ball	1
28	3296–6	Nut – Lock	1
29	63–2930	Chain – Drive	1
30	66–8030	Transmission Assembly	1
31	63–2990	Frame – Transmission	1
32	3290–461	Washer – Belleville	4
33	11–0590	Screw – Hex Hd.	4
34	3253–4	Washer – Lock	2
35	3210–1	Screw – Hex Hd.	2
36	94–2782	Cap – Wire, Model 38590	1
37	3256–41	Washer	1
*	2210–250	Screw, Wire Harness Hook–Up	1

*Not Illustrated
† Obtain Form Tecumseh

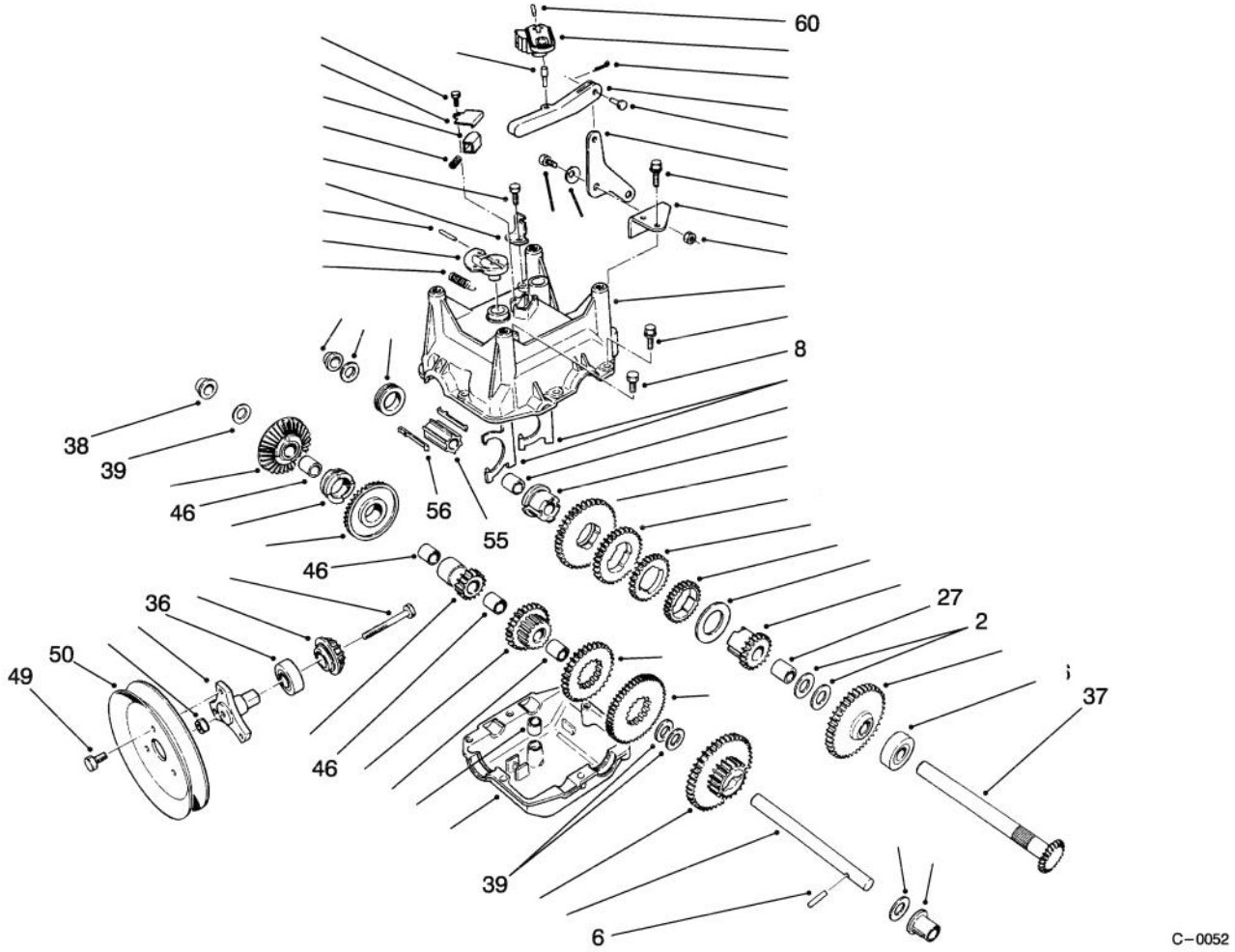

TRANSMISSION ASSEMBLY NO. 66–8030

Ref. No.	Part No.	Description	No. Used
1	62–1180	Bushing – Output (Flange)	1
2	252–59	Washer – Thrust	3
3	62–0430	Collar – Shift (Speed)	1
4	63–2920	Spring – Extension (F/R Return)	1
5	62–0880	Lever – Direction Shift	1
6	32121–106	Pin – Coil	1
7	62–1740	Bracket – Cable	1
8	32144–4	Screw – Self Tapping	2
9	63–2890	Spring – Compression (Detent)	1
10	62–1020	Button – Detent	1
11	62–1690	Cover – Detent	1
12	32104–71	Screw – Pan Hd.	1
13	63–3410	Bolt – Shoulder	1
14	3290–477	Washer – Curved	1
15	63–2190	Pin – Gearshift Link	1
16	62–0870	Lever – Gear Shift	1
17	3272–1	Pin – Cotter	1

Ref. No.	Part No.	Description	No. Used
18	62–0860	Link – Gearshift	1
19	283–3	Pin – Clevis	1
20	63–2600	Bellcrank	1
21	32104–95	Screw – Hex Washer Hd.	2
22	62–1190	Bracket – Bellcrank	1
23	3296–42	Nut – Lock	1
24	62–0490	Gear Case – Upper	1
25	32144–86	Screw – Hex Washer Hd.	6
26	62–1040	Yoke–Shift	2
27	62–1350	Bushing – Output	2
28	62–0320	Sleeve	1
29	62–0240	Gear – 45T	1
30	62–0220	Gear – 34T	1
31	62–0200	Gear – 27T	1
32	62–0250	Gear – 29T	1
33	63–2280	Washer – Thrust	1
34	62–0340	Sleeve – Gear 19T	1
35	62–0370	Gear – 41T	1
36	38–7820	Bearing – Ball	2

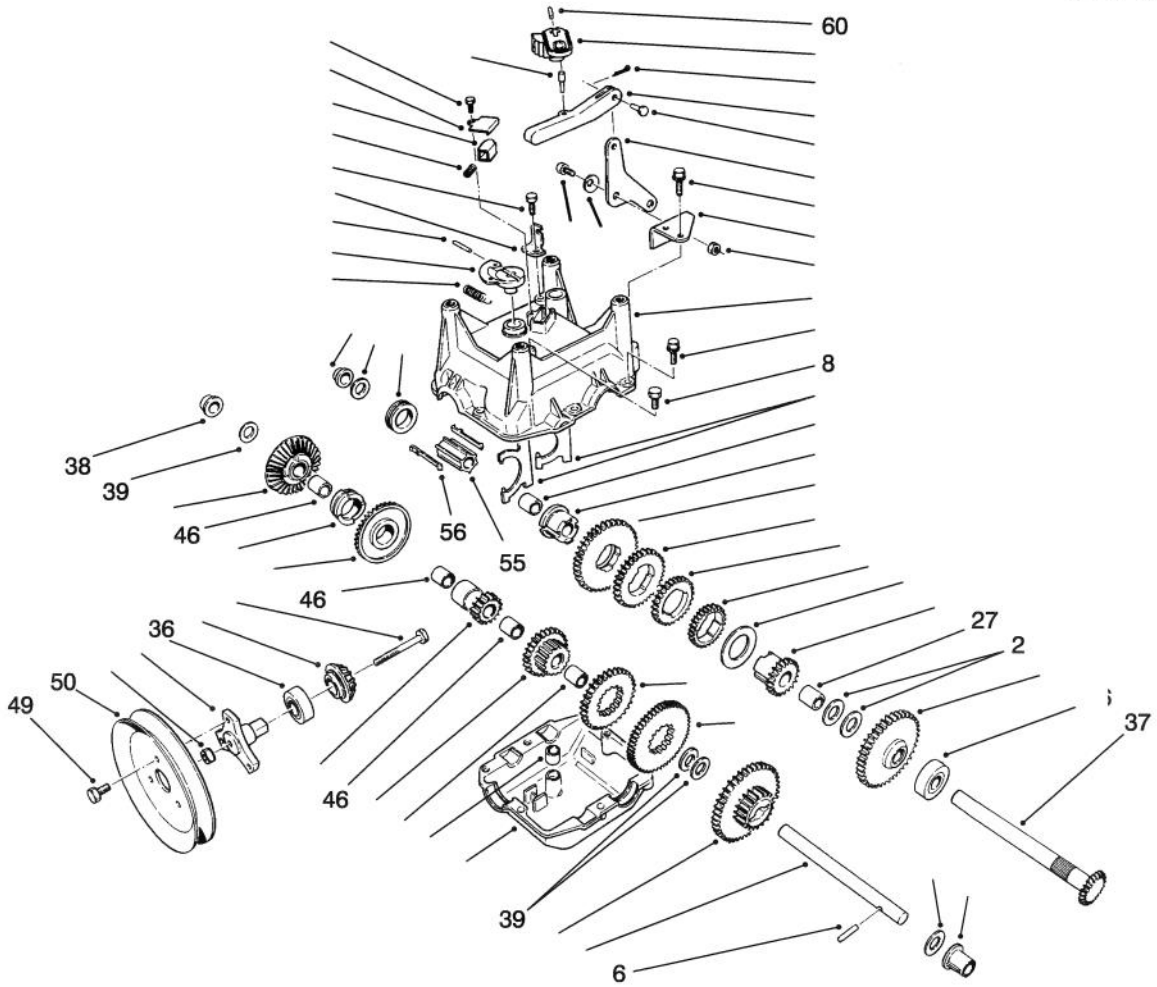

TRANSMISSION ASSEMBLY NO. 66–8030 (Continued)

Ref. No.	Part No.	Description	No. Used
37	62–1080	Shaft – Output	1
38	62–1170	Bushing – Flange	2
39	257–10	Washer – Thrust	4
40	62–0330	Shaft – Intermediate	1
41	62–0360	Gear – Compound 19T/41T	1
42	62–0260	Gear – 51T	1
43	62–0210	Gear – 33T	1
44	62–0480	Gear Case – Lower	1
45	29–9570	Bushing – Yoke	1
46	62–1160	Bushing – Intermediate	4
47	68–4310	Gear – 26T	1
48	62–0500	Gear – 15T	1
49	12–3270	Screw	3

Ref. No.	Part No.	Description	No. Used
50	62–1310	Pulley – Traction	1
51	32128–32	Nut – Flange Lock	1
52	62–0380	Hub – Pulley	1
53	62–0350	Pinion – Bevel 19T	1
54	321–15	Screw – Cap Hex Hd.	1
55	68–4320	Sleeve – Shift	1
56	62–0310	Key – Shift	2
57	67–5870	Gear – Bevel 36T	1
58	67–5880	Collar – Shift	1
59	13–3559	Gear – Bevel Reverse 36T (Incl. Ref. #46)	1
60	32121–120	Pin – Coil	2
*	505–101	Grease – 14.5 oz. Cartridge	1

*Not Illustrated

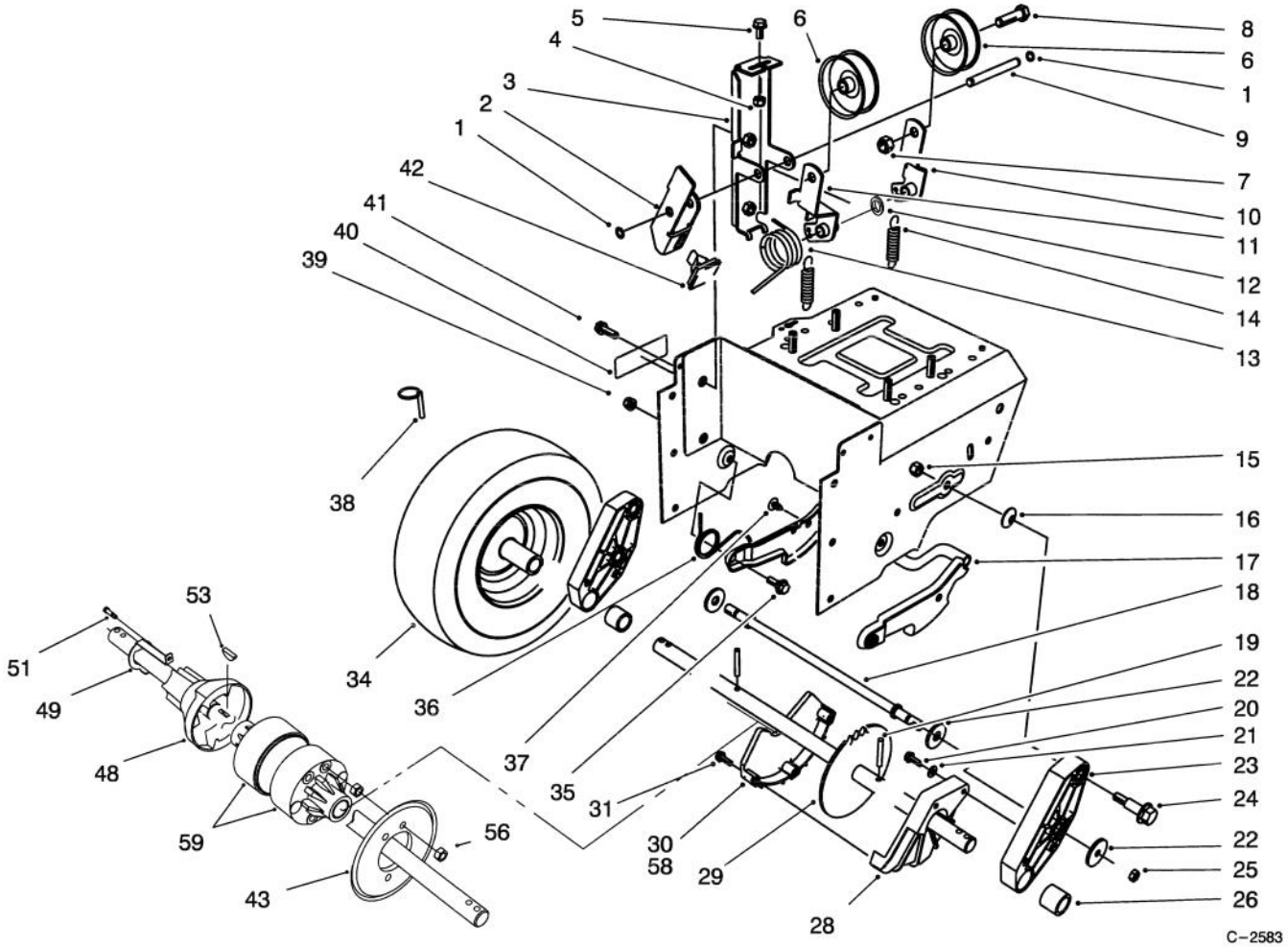

TRACTION DRIVE ASSEMBLY

Ref. No.	Part No.	Description	No. Used
1	32120–46	Ring – Retaining	2
2	63–2820	Arm – Brake	1
3	63–2850	Bracket – Idler Arm	1
4	3296–42	Nut – Lock	1
5	3234–13	Screw – Hex. Hd.	1
6	3–4244	Pulley – Idler	2
7	3296–59	Nut – Lock	2
8	323–7	Screw – Hex Hd.	2
9	62–0970	Pin – Idler	1
10	93–8045	Arm – Traction Idler	1
11	93–8046	Arm – Impeller Idler	1
12	3256–38	Washer – Flat	1
13	63–2881	Spring – Torsion	1
14	63–2870	Spring – Extension	2
15	3296–39	Nut – Lock	2
16	3290–461	Washer – Belleville	2
17	62–0470	Latch – Arm	1
18	66–7720	Rod – Latch	1
19	32121–9	Pin – Roll	2

Ref. No.	Part No.	Description	No. Used
20	32144–4	Screw – Hex Flange Hd.	2
21	3256–1	Washer – Flat	2
22	63–3340	Washer	4
23	66–7740	Pivot Arm Assembly (Incl. Ref. # 26)	2
24	62–1330	Bolt – Shoulder	2
25	3296–23	Nut – Lock	2
26	63–2250	Bushing – Axle	2
28	62–1010	Guard – Chain L.H.	1
29	63–2112	Axle Assembly (Model 38591 Only)	1
30	62–1000	Guard – Chain R.H. (Model 38591 Only)	1
31	32104–121	Screw – Hex Flange Hd.	3
34	67–9230	Tire & Wheel Assembly	2
35	5–2490	Bolt – Shoulder	2
36	63–2740	Spring – Torsion	1
37	3290–476	Fastener – Panel	1
38	3290–243	Pin – Klik	2

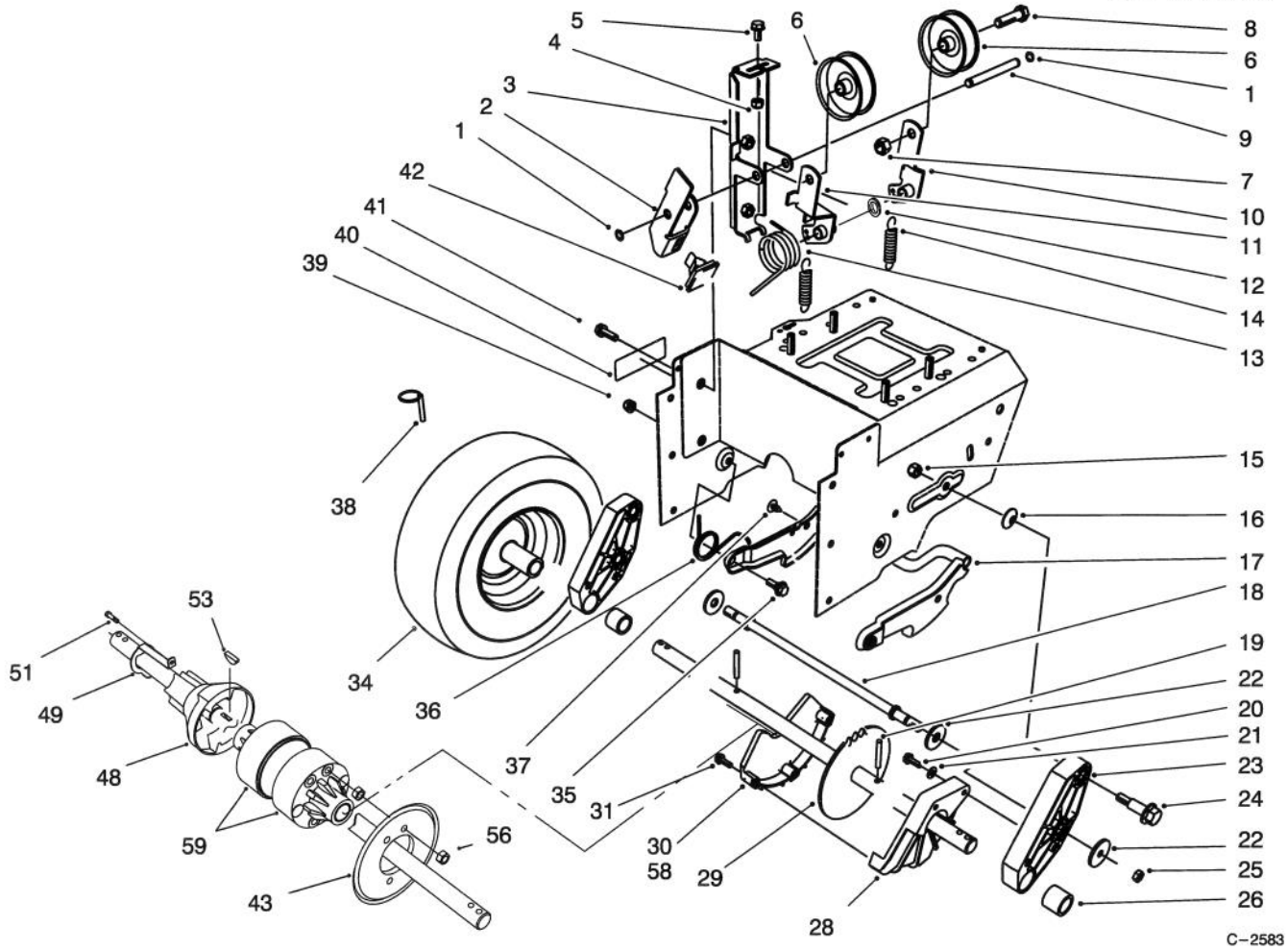

TRACTION DRIVE ASSEMBLY (Continued)

Ref. No.	Part No.	Description	No. Used
39	3296–47	Nut – Lock	2
40	66–6860	Decal – Warning (Model No.38590 Only)	1
*	94–2575	Decal – Warning (Model No. 38591 Only)	1
41	3234–7	Screw – Hex Flange Hd.	2
42	66–8060	Pad – Brake	1
43	68–9270	Sprocket (32T) (Model 38590 Only)	1
44	68–9200	Housing – L.H. (Model 38590 Only)	1
48	68–9250	Coupling – Differential (Model 38590 Only)	1

Ref. No.	Part No.	Description	No. Used
49	68–9260	Spring – Lockout (Model 38590 Only)	1
51	32144–73	Screw – Hex. Washer Hd. (Model 38590 Only).	1
53	3257–41	Key – Woodruff (Model 38590 Only)	2
56	3296–47	Nut (Model 38590 Only)	6
58	68–9310	Guard – Chain R.H. (Model 38590 Only)	1
59	68–9200	Differential Asm (Incl. Ref. #44–57) (Model 38590 Only)	1

*Not Illustrated

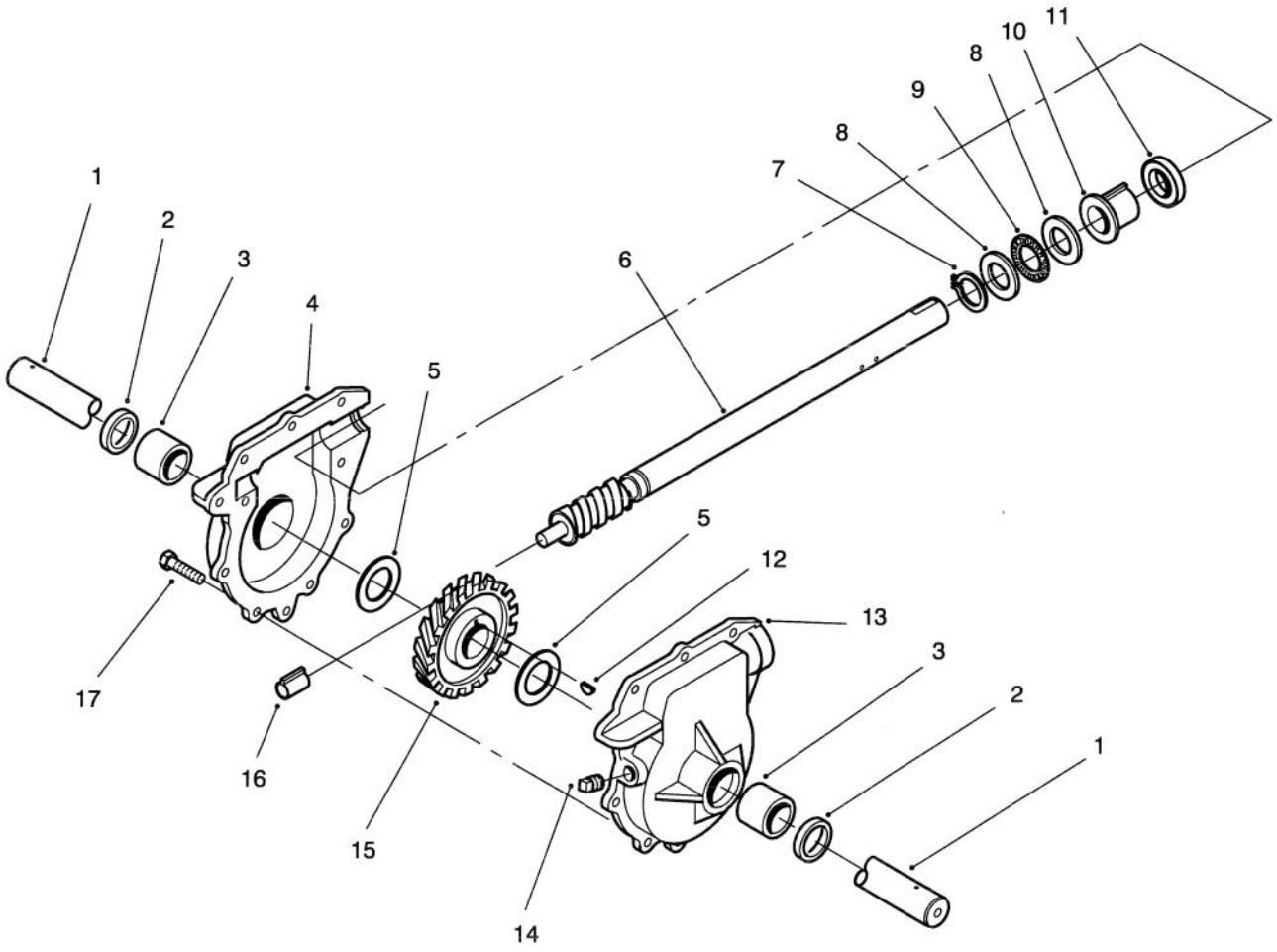

32" AUGER GEARCASE ASSEMBLY NO. 74–1562

Ref. No.	Part No.	Description	No. Used
1	62–1532	Shaft – Auger (32")	1
2	7–0045	Seal – Oil	2
3	256–237	Bushing – Sleeve	2
4	74–1550	Gearcase Assembly – R.H. (Incl. Ref. # 2–3)	1
5	252–71	Bearing – Thrust	2
6	66–7811	Shaft – Impeller	1
7	32151–33	Ring – Snap	1
8	252–78	Washer – Thrust	2
9	252–76	Bearing – Thrust	1

Ref. No.	Part No.	Description	No. Used
10	37–6560	Bushing – Input	1
11	253–149	Seal – Input	1
12	3257–10	Key – Woodruff	1
13	74–1540	Gearcase Assembly – L.H. (Incl. Ref. # 2–3)	1
14	281–1	Plug – Pipe Sq. Hd.	1
15	62–0120	Gear – Helical	1
16	62–1150	Bushing – Worm	1
17	32144–110	Screw – Hex Washer Hd.	9
*	505–129	Sealant – 100g Tube	1

*Not Illustrated

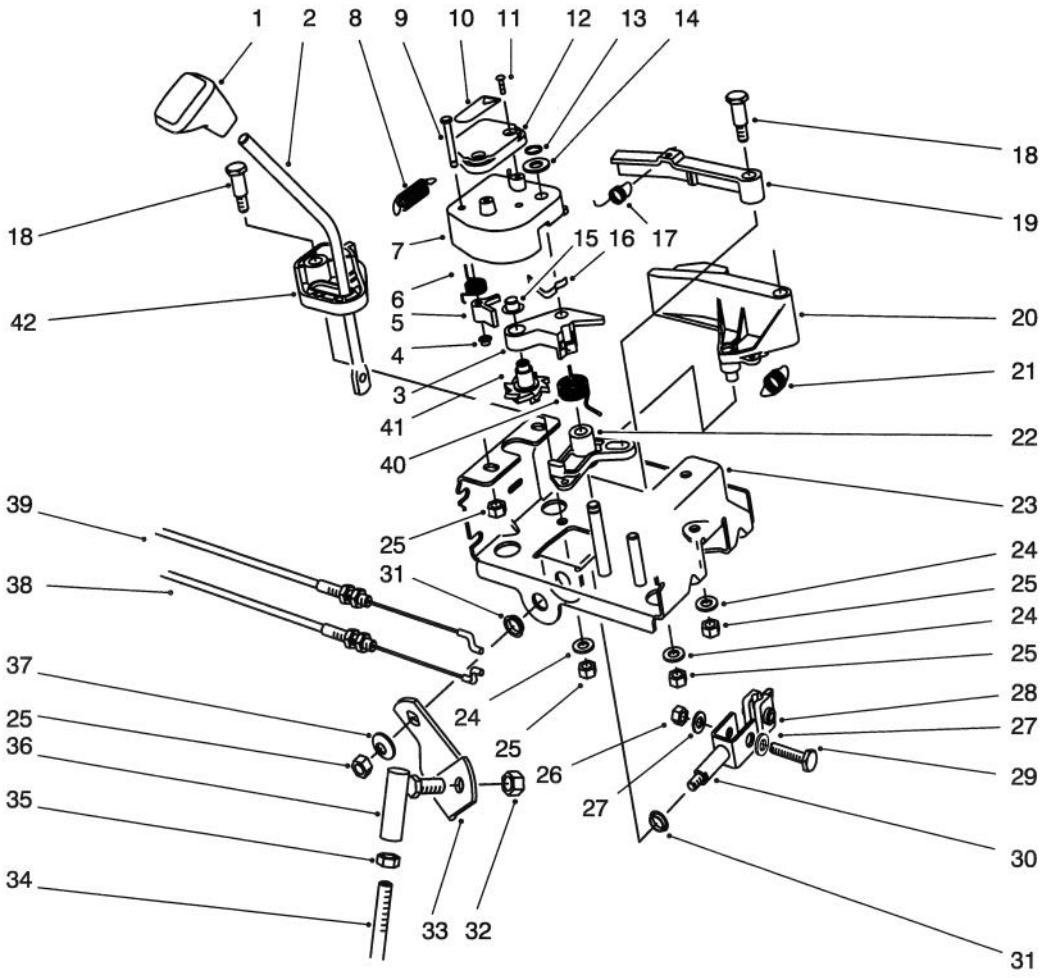

TRACTION LINKAGE ASSEMBLY

Ref. No.	Part No.	Description	No. Used
1	62–1290	Knob – Shift	1
2	67–9240	Rod – Shift (Upper)	1
3	62–1110	Lever – Index Wheel	1
4	3290–422	Nut – Push	1
5	62–0180	Tang – Index	1
6	62–1650	Spring – Torsion	1
7	62–1100	Lever – Latch	1
8	63–2220	Spring – Extension	1
9	63–2610	Pin – Tang	1
10	63–2480	Decal – #2	1
11	94–6961	Screw – Pan Hd.	2
12	62–1140	Cover – Latch	1
13	32120–46	Ring – Retaining	1
14	257–9	Washer – Thrust	1
15	3290–320	Nut – Push	1
16	62–1710	Spring – Flat	1
17	63–2240	Spring – Extension	1
18	63–2650	Screw – Shoulder	2
19	62–1700	Lever – Lockout	1
20	62–1130	Lever – Reverse	1
21	63–2230	Spring – Extension	1

Ref. No.	Part No.	Description	No. Used
22	62–1120	Lever – Reverse	1
23	63–2150	Frame – Control	1
24	3256–23	Washer – Flat	3
25	3296–29	Nut – Lock	7
26	3296–42	Nut – Lock	1
27	3256–1	Washer – Flat	2
28	67–9250	Retainer – Shift Rod	1
29	321–9	Screw – Cap Hex. Hd.	1
30	66–7730	Clevis	1
31	256–296	Bushing – Nyliner	2
32	3296–6	Nut – Lock	1
33	63–2630	Bracket – Shift	1
34	63–2830	Rod – Shift (Lower)	1
35	3220–3	Nut – Jam	1
36	78–2920	Joint – Ball	1
37	3290–456	Washer – Belleville	1
38	63–2210	Cable – Gearbox	1
39	63–2200	Cable – Latch	1
40	63–2270	Spring – Torsion	1
41	62–0170	Wheel – Index	1
42	62–1470	Base – Lockout	1

3318–678 REV. A

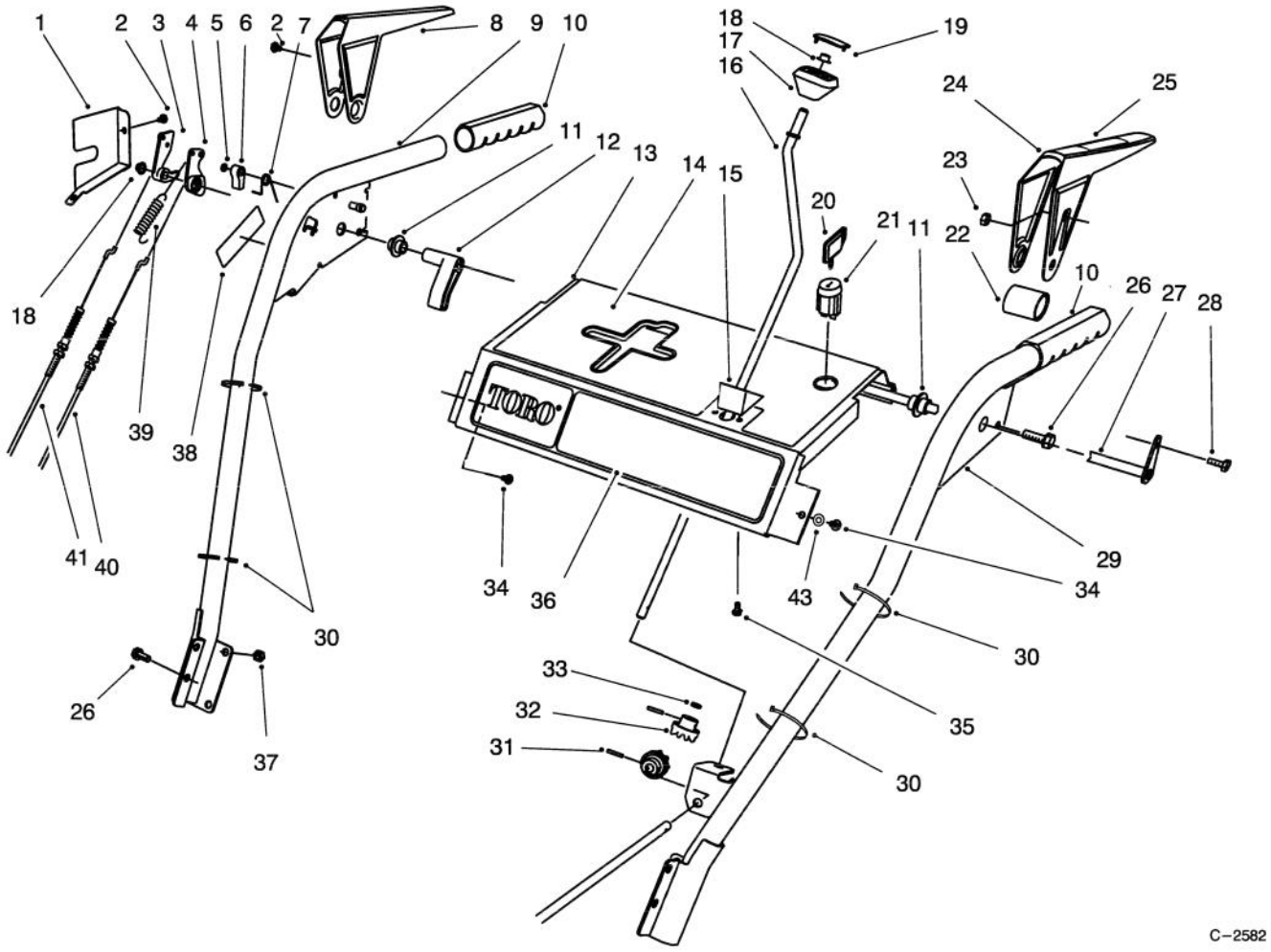

HANDLE ASSEMBLY

Ref. No.	Part No.	Description	No. Used
1	63–2170	Cover – Lever Lock	1
2	2210–250	Screw	3
3	62–0300	Tang – Locking	1
4	62–0290	Cam – Release	1
5	32151–66	Ring – Retaining	1
6	62–0280	Latch – Lock	1
7	63–2910	Spring – Torsion	1
8	62–1050	Lever – Impeller	1
9	62–1381	Handle – R.H.	1
10	66–7850	Handlegrip	2
11	62–1070	Bushing – Lever	2
12	62–1640	Lever – Trip	1
13	66–8100	Panel – Control	1
14	66–6850	Decal – Panel Top (Model 38590 Only)	1
*	94–2578	Decal – Panel Top (Model 38591 Only)	1
15	62–1490	Plate – Guide	1
16	63–2160	Rod – Chute Crank	1
17	62–1320	Knob – Chute Control	1

Ref. No.	Part No.	Description	No. Used
18	3290–320	Nut – Push	2
19	62–1520	Cover – Knob	1
20	63–8360	Key – Switch	1
21	40–5940	Switch – On/Off	1
22	63–3380	Spacer – Traction Lever	1
23	3296–2	Nut – Lock	1
24	62–1060	Lever – Traction	1
25	63–3050	Decal – Lever (Model 38590 Only)	1
26	3234–7	Screw – Hex Flange Hd.	6
27	63–2030	Rod – Cross	1
28	3290–359	Screw	1
29	66–8091	Handle – L.H.	1
30	3290–378	Tie – Cable	4
31	32121–50	Pin – Roll	2
32	62–1460	Gear – Universal	2
33	62–1230	Washer – Rubber	1
34	32104–76	Screw – Self Tapping	2
35	94–6961	Screw – Pan Hd.	2
36	93–8029	Decal – Panel Front	1

*Not Illustrated

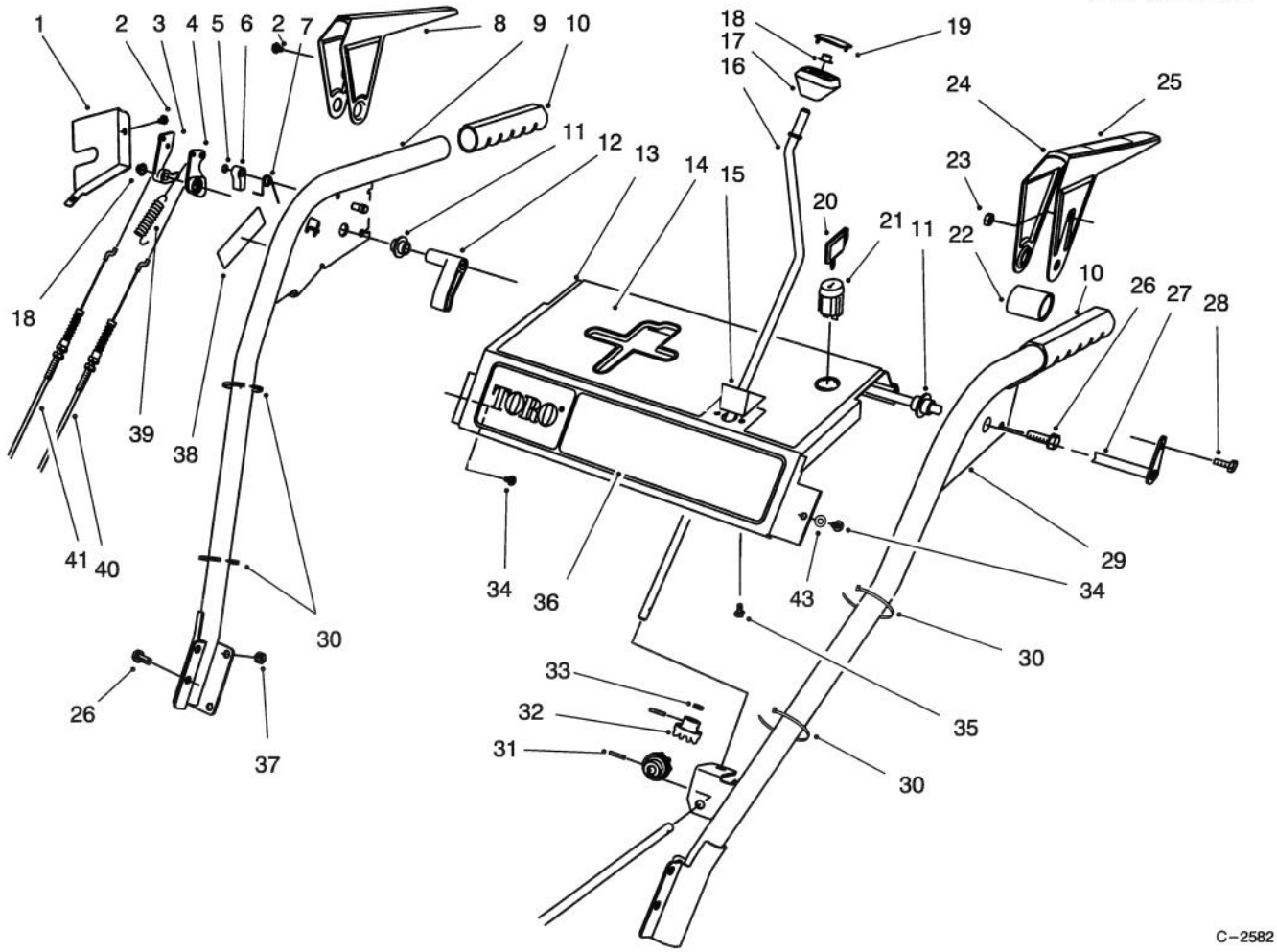

HANDLE ASSEMBLY (Continued)

Ref. No.	Part No.	Description	No. Used
37	3296–47	Nut – Lock	4
38	66–6860	Decal – Warning (Model 38590 Only)	1
*	94–2575	Decal – Warning (Model 38591 Only)	1
39	88–0810	Spring – Extension	1
40	63–2710	Cable – Traction	1
41	63–2700	Cable – Impeller	1
43	3256–14	Washer – Flat	2

Ref. No.	Part No.	Description	No. Used
*	54–9810	Assembly – Wire	1
*	66–6900	Assembly – Wire, Adapter (Model 38591 only)	1
*	63–3420	Harness – Wire	1
*	17–4279	Loose Parts Kit (Model 38590 Only)	1
*	17–4289	Loose Parts kit (Model 38591 Only)	1

*Not Illustrated

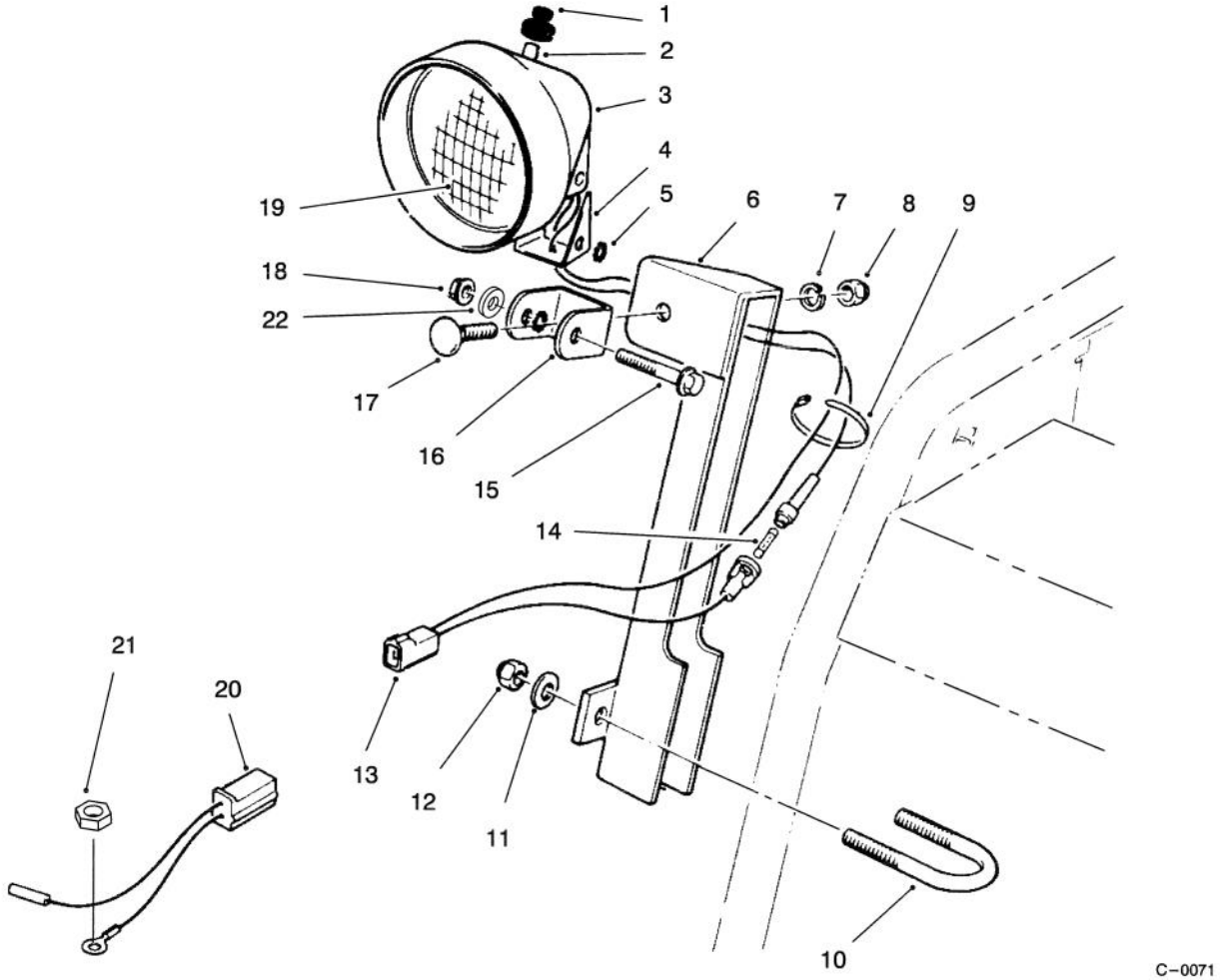

LIGHT ASSEMBLY NO. 66–7941

Ref. No.	Part No.	Description	No. Used
1	218–473	Boot – Switch	1
2	218–553	Switch Assembly	1
3	218–552	Bucket – Headlamp	1
4	218–554	Bracket	1
5	3255–8	Washer – Lock	2
6	68–7110	Mount – Lamp (Model 38591 Only)	1
7	3253–21	Washer – Lock	1
8	3217–7	Nut – Hex.	1
9	3290–378	Tie – Cable	2
10	68–7140	Bolt – U (Model 38591 Only)	1
11	3256–23	Washer – Flat	2
12	3296–29	Nut – Lock	2
13		Wire Assembly	1

Ref. No.	Part No.	Description	No. Used
†14		Fuse – 7–1/2 Amp.	1
15	322–13	Screw – Hex. Flange Hd.	1
16	218–556	Bracket – U	1
17	3231–2	Bolt – Carriage	1
18	32128–35	Nut – Flange Lock	1
19	218–16	Bulb – Sealed Beam	1
20	54–9810	Wire Assembly	1
21	3217–6	Nut – Hex (Model 38591 Only)	1
22	3256–26	Washer – Flat (Model 38591 Only)	1
*	66–6900	Wire Assembly – Adaptor (Model 38591 Only)	1
*	54–9871	Headlamp Assembly (Incl. Ref. #1–5, 7–8 & 13–19)	1

*Not Illustrated
†Obtain Locally

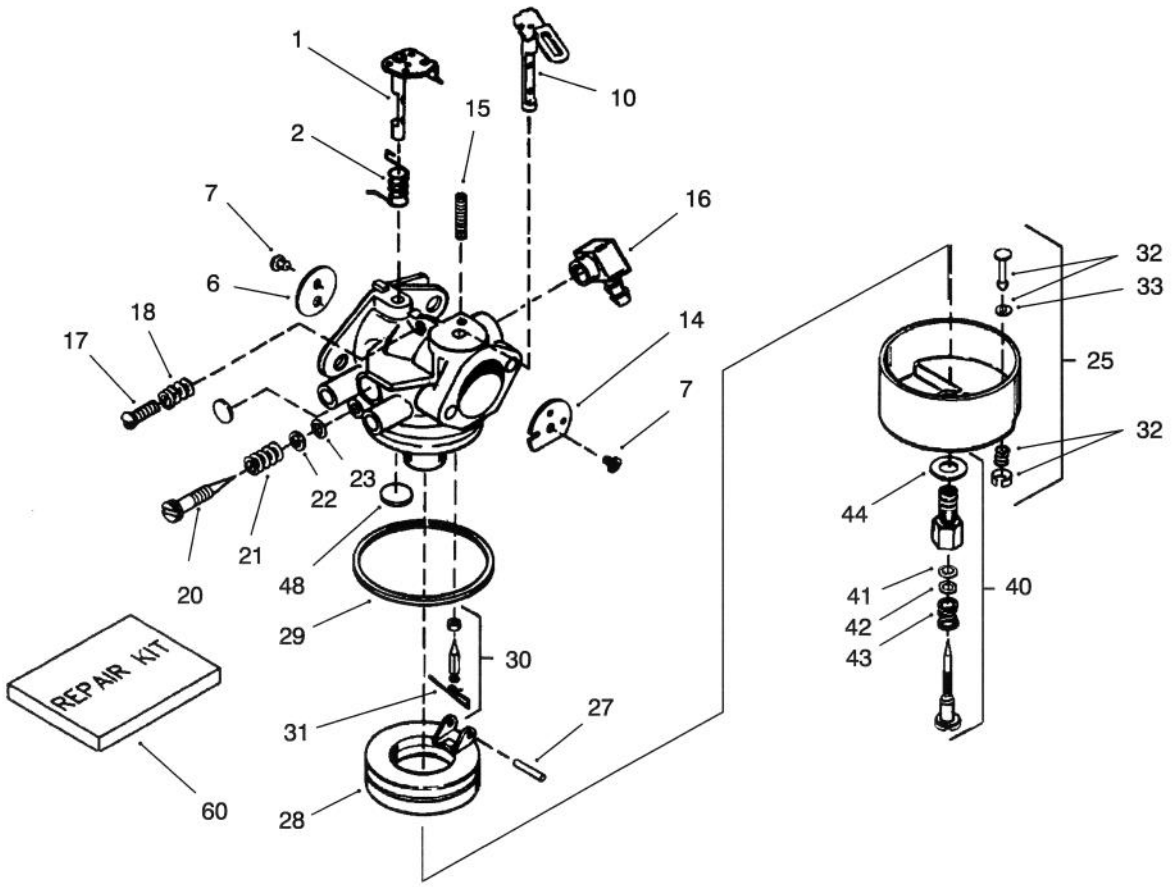

CARBURETOR NO. 632536

Ref. No.	Part No.	Description	No. Used
1	632512	Throttle Shaft & Lever Asm.	1
2	631970	Throttle Return Spring	1
6	632517	Throttle Shutter	1
7	650506	Shutter Screw	4
10	632513	Choke Shaft & Lever Asm.	1
14	632514	Choke Shutter	1
15	630735	Choke Positioning Spring	1
16	631775	Fuel Fitting	1
17	650417	Idle Speed Screw	1
18	630766	Tension Spring	1
20	632281	Idle Mixture Screw	1
21	630766	Tension Spring	1
22	630739	Idle Mixture Screw Washer	1
23	630740	Idle Mixture Screw O–Ring	1
25	632594	Float Bowl Asm.	1

Ref. No.	Part No.	Description	No. Used
27	631024	Float Shaft	1
28	632019	Float	1
29	631028	Float Bowl O–Ring	1
30	631021	Inlet Needle, Seat, Clip	1
31	631022	Spring Clip	1
32	27136A	Bowl Drain Asm.	1
33	27554	Drain Plunger Gasket	1
40	632239	Mian Adj. Screw Asm.	1
41	630740	High Spd. Mix. Scw. O–Ring	1
42	630739	Washer	1
43	630738	Tension Spring	1
44	27110	Bowl Nut Washer	1
47	630748	Welch Plug, Idle Mixture Well	1
48	631027	Welch Plug, Vent	1
60	632347	Repair Kit	1

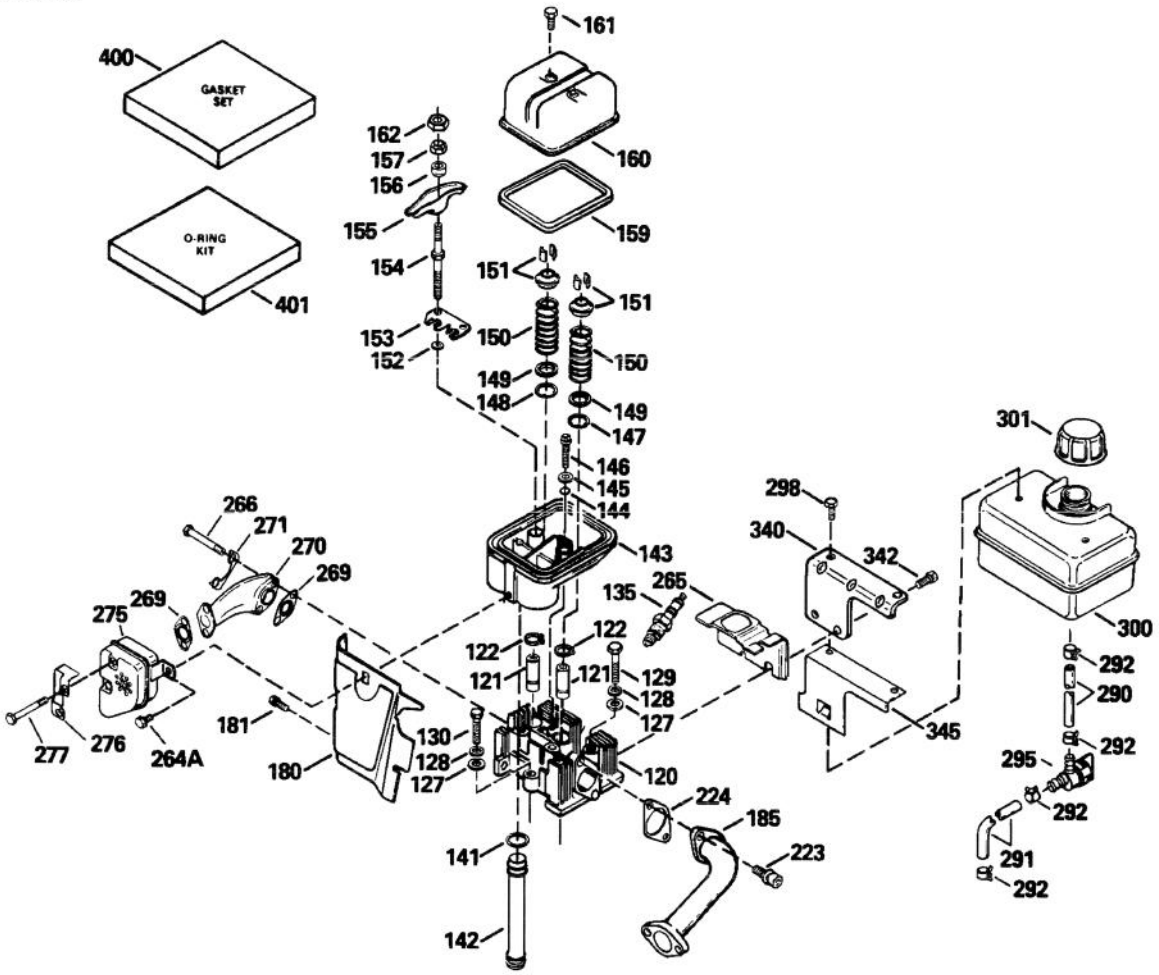

ENGINE ASSEMBLIES
OHSK 120–222023F AND OHSK 120–222024F

Ref. No.	Part No.	Description	No. Used
120	35307	Cylinder Head	1
121	730218	Valve Guide Kit (Incl. Ref.# 2 of 122)	2
122	792035	Retaining Ring	2
127	650691	Washer	6
128	650690	Belleville Washer	6
129	650746	Screw	4
130	650692	Screw	4
135	34046	Resistor Spark Plug (RL86C)	1
141	33481	O–Ring (Also Incl. in 401)	4
142	35475	Push Rod Tube	2
143	35310	Rocker Arm Housing	1
144	33484	O–Ring (Also Incl. in 401)	1
145	650168	Washer	1
146	32610A	Screw	1
147	33509	O–Ring (Also Incl. in 401)	1
148	34410	O–Ring (Also Incl. in 401)	1
149	33510	Valve Spring Cap	2
150	33507	Valve Spring	2
151	33508	Valve Spring Keeper	2
152	35295	O–Ring (Also Incl. in 401)	2
153	35296	Push Rod Guide	1
154	650878	Rocker Arm Stud	2
155	35297	Rocker Arm	2
156	35298	Rocker Arm Bearing	2

Ref. No.	Part No.	Description	No. Used
157	28264	Lock Nut (Incl. Ref.# 162) (Also Incl. in 401)	2
159	35299B	O–Ring (Incl. 2 of 161) (Also Incl. in 401)	1
160	35300	Rocker Arm Housing	1
161	650879	Screw – Torx	2
162	650903	Jam Nut	2
180	35301	Blower Housing Extension	1
181	650128	Screw	1
185	35690	Intake Pipe	1
223	650971	Screw – Torx	2
224	33515A	Intake Pipe Gasket	1
264A	30063	Screw – Torx	1
265	35290	Cylinder Head Cover	1
266	650876	Screw	2
269	35762	Exhaust Manifold Gasket	2
270	35292	Exhaust Manifold	1
271	35293	Locking Plate	1
275	35294	Muffler	1
276	35348	Locking Plate	1
277	650877	Screw	2
290	30962	Fuel Line	1
291	29774	Fuel Line	1
292	26460	Fuel Line Clamp	4
295	35857	Fuel Shut–Off Valve	1

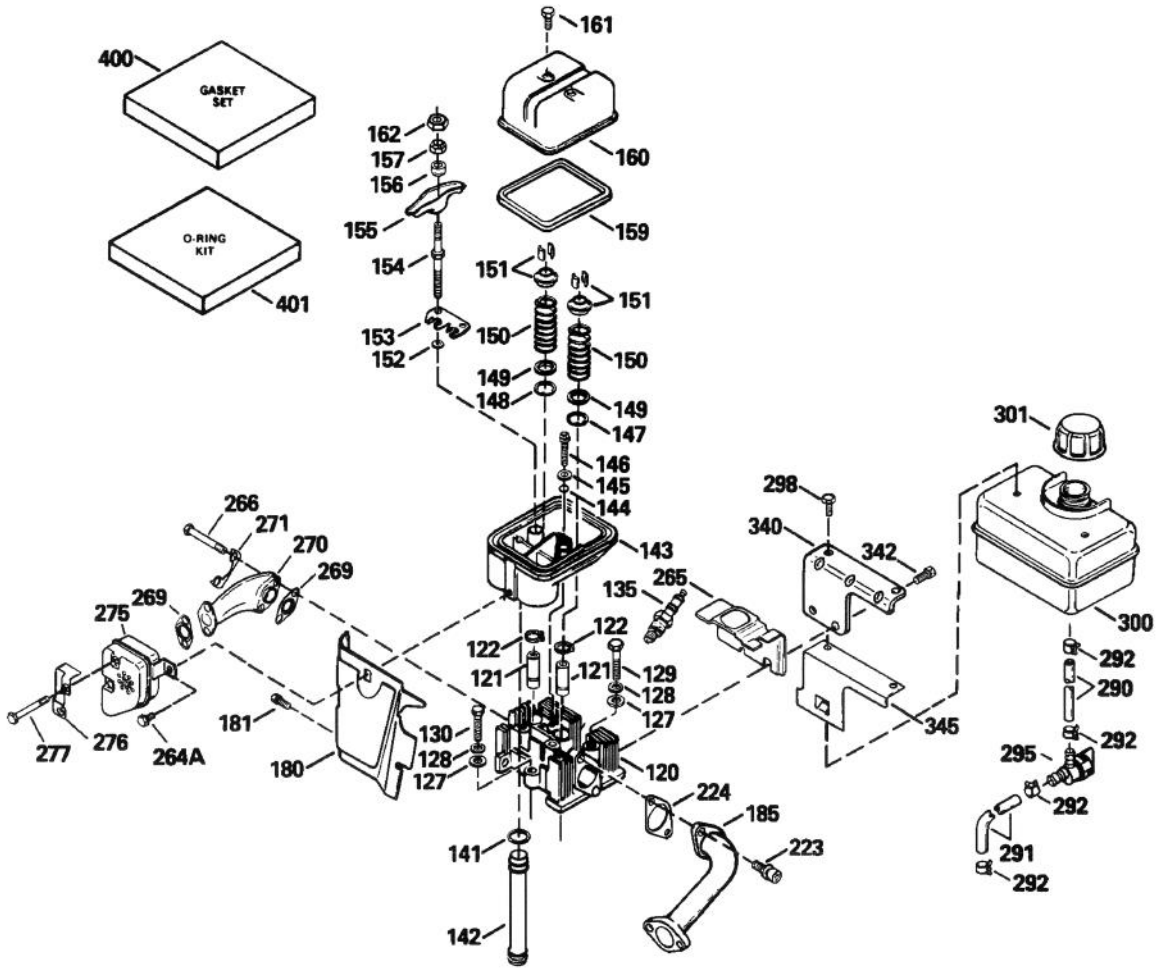

ENGINE ASSEMBLIES
OHSK 120–222023F AND OHSK 120–222024F (Cont.)

Ref. No.	Part No.	Description	No. Used
298	650665	Screw	2
300	34156A	Fuel Tank (Incl. 292 & 301)	1
301	36246	Fuel Cap	1
340	35696	Fuel Tank Bracket	1

Ref. No.	Part No.	Description	No. Used
342	792028	Screw	2
345	35699	Heat Baffle	1
400	35331B	Gasket Set	1
401	35332	O–Ring Kit	1

ENGINE ASSEMBLIES
OHSK 120–222023F AND OHSK 120–222024F (Cont.)

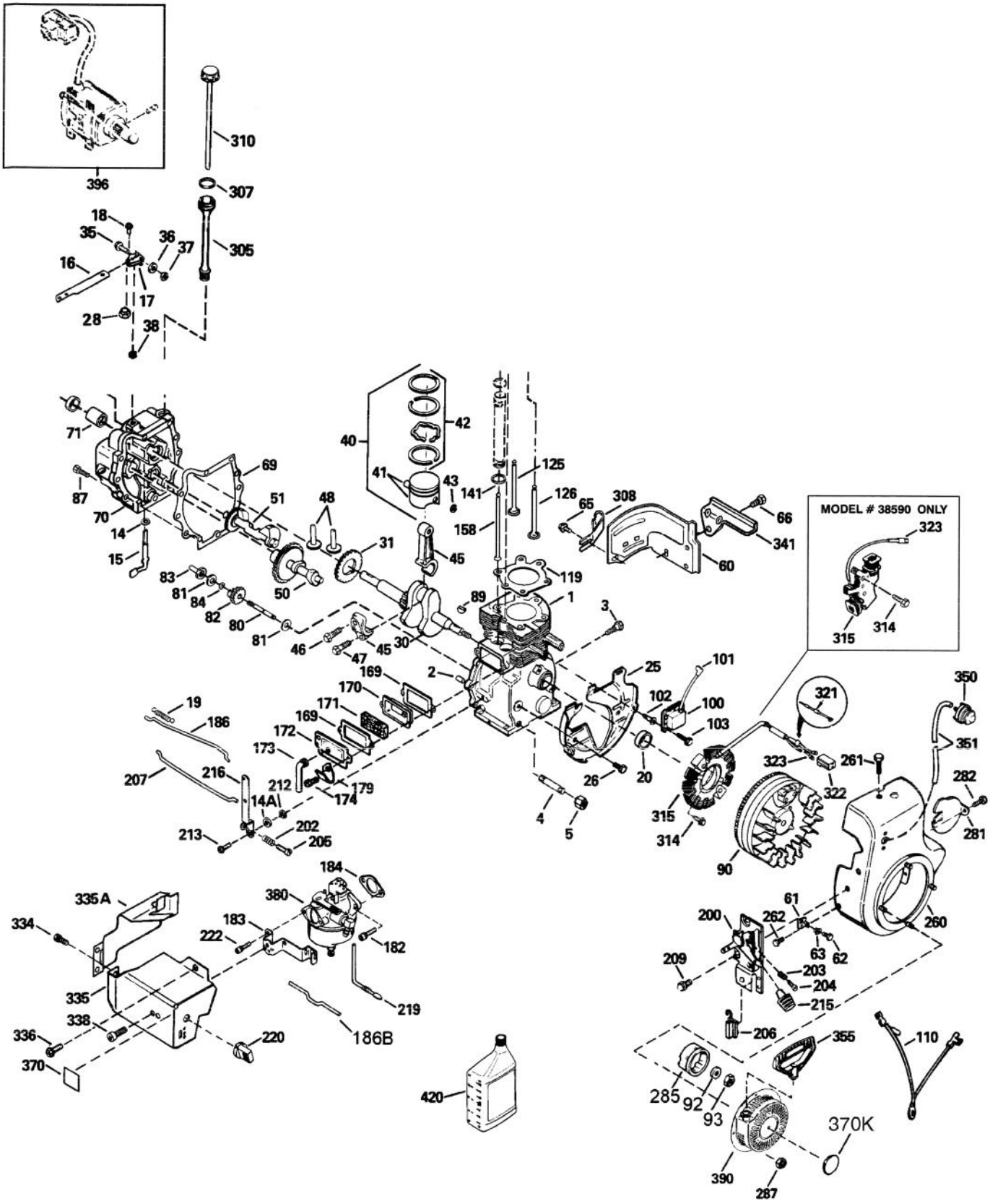

ENGINE ASSEMBLIES
OHSK 120–222023F AND OHSK 120–222024F (Cont.)

Ref. No.	Part No.	Description	No. Used
1	35677A	Cylinder (Incl. Ref.# 2, 20, 72 & 80)	1
2	27652	Dowel Pin	2
3	650820	Screw	2
5	30969	Extension Cap	1
14	28277	Washer	1
14A	28558	Washer	1
15	35685	Governor Rod (Incl. Ref.#14 & 38)	1
16	35686	Governor Lever	1
17	29916	Governor Lever Clamp	1
18	650548	Screw	1
19	35688	Extension Spring	1
20	35319	Oil Seal	1
25	36460	Blower Housing Baffle	1
26	650561	Screw	2
28	30322	Lock Nut	1
30	36706	Crankshaft	1
31	35327	Counterbalance Gear	1
35	29826	Screw	1
36	29918	Lock Washer	1
37	29216	Lock Nut	1
38	29642	Retaining Ring	3
40	35776	Piston, Pin & Ring Set (Std.)	1
40	35777	Piston, Pin & Ring Set (.010)	1
40	35778	Piston, Pin & Ring Set (.020)	1
41	35773	Piston & Pin Ass'y (Std.) (Incl. Ref.#43)	1
41	35774	Piston & Pin Ass'y (.010) (Incl. Ref.#43)	1
41	35775	Piston & Pin Asm. (.020) (Incl. Ref.# 43)	1
42	35779	Ring Set (Std.)	1
42	35780	Ring Set (.010)	1
42	35781	Ring Set (.020)	1
43	35772	Piston Pin Retaining Ring	2
45	35681	Connecting Rod Asm. (Incl. Ref.# 46 & 47)	1
46	650908	Connecting Rod Bolt	1
47	650882	Connecting Rod Bolt	1
48	35313	Valve Lifter	2
50	35682A	Camshaft (MCR)	1
51	35315A	Counterbalance Weight	1
60	35316A	Blower Housing Extension	1
61	34126	Grommet Mounting Bracket	1
62	650760	Screw	1
63	28545	Grommet	1
65	650128	Screw	1
66	650561	Screw	1
69	35683	Cylinder Cover Gasket	1
70	35684A	Cylinder Cover (Incl. Ref.#14,15,38,71,75)	1
71	35377	Crankshaft Bushing	1
75	35319	Oil Seal	1
80	35751	Governor Shaft	1
81	35479	Washer	2
82	35321	Governor Gear Asm.	1
83	35322	Governor Spool	1
84	29193	Retaining Ring	1
86	650833	Screw	7
87	650832	Screw	1
89	32589	Flywheel Key	1
90	611094	Flywheel (W/Ring Gear)	1
90	611093	Flywheel (W/Ring Gear) (Model 38590 Only)	1
92	650880	Lock Washer	1
93	650881	Flywheel Nut	1
100	35135	Solid State Ignition	1
101	610118	Spark Plug Cover	1
102	650872	Solid State Mounting Stud	2
103	651007	Screw – Torx	2
110	35253	Ground Wire	1
119	35306A	Cylinder Head Gasket	1
125	35308	Exhaust Valve (Std.)	1
125	35433	Exhaust Valve (1/32)	1
126	35309	Intake Valve (Std.)	1
126	35432	Intake Valve (1/32)	1
158	35466	Push Rod	2
169	27896A	Valve Cover Gasket	2
170	28423	Breather Body	1
171	28424	Breather Element	1
172	28425	Valve Cover	1
173	35350	Breather Tube	1
174	650128	Screw	2
179	30593	Retaining Clip	1
182	650517	Screw	2
183	34583A	Choke Bracket	1
184	33263	Carb. To Intake Pipe Gasket	1
186	35691	Governor Link	1
186B	36653	Choke Spring	1
200	35702	Control Bracket (Incl. Ref.#203, 204 & 206)	1
202	36482	Compression Spring	1
203	31342	Compression Spring	1
204	650549	Screw	1
205	650777	Screw	1
206	610973	Terminal	1
207	35692	Throttle Link	1
209	650821	Screw	2
212	30773A	Bushing	1
213	650930	Screw	1
215	35440	Control Knob	1
216	35679	R.P.M. Adjusting Lever	1
219	35689	Choke Rod	1
220	35438	Choke Knob	1
222	28820	Screw	2
260	35694	Blower Housing	1
261	30063	Screw – Torx	1
262	29747B	Screw – Torx	2
281	33013	Starter Bubble Cover	1
282	650760	Screw	1
285	35985B	Starter Cup	1
287	29752	Nut & Lock Washer	4
305	35574	Oil Fill Tube	1
307	35499	O–Ring	1
308	35539	Fill Tube Clip	1
310	35700	Dipstick	1
314	650873	Screw	2

ENGINE ASSEMBLIES
OHSK 120–222023F AND OHSK 120–222024F (Cont.)

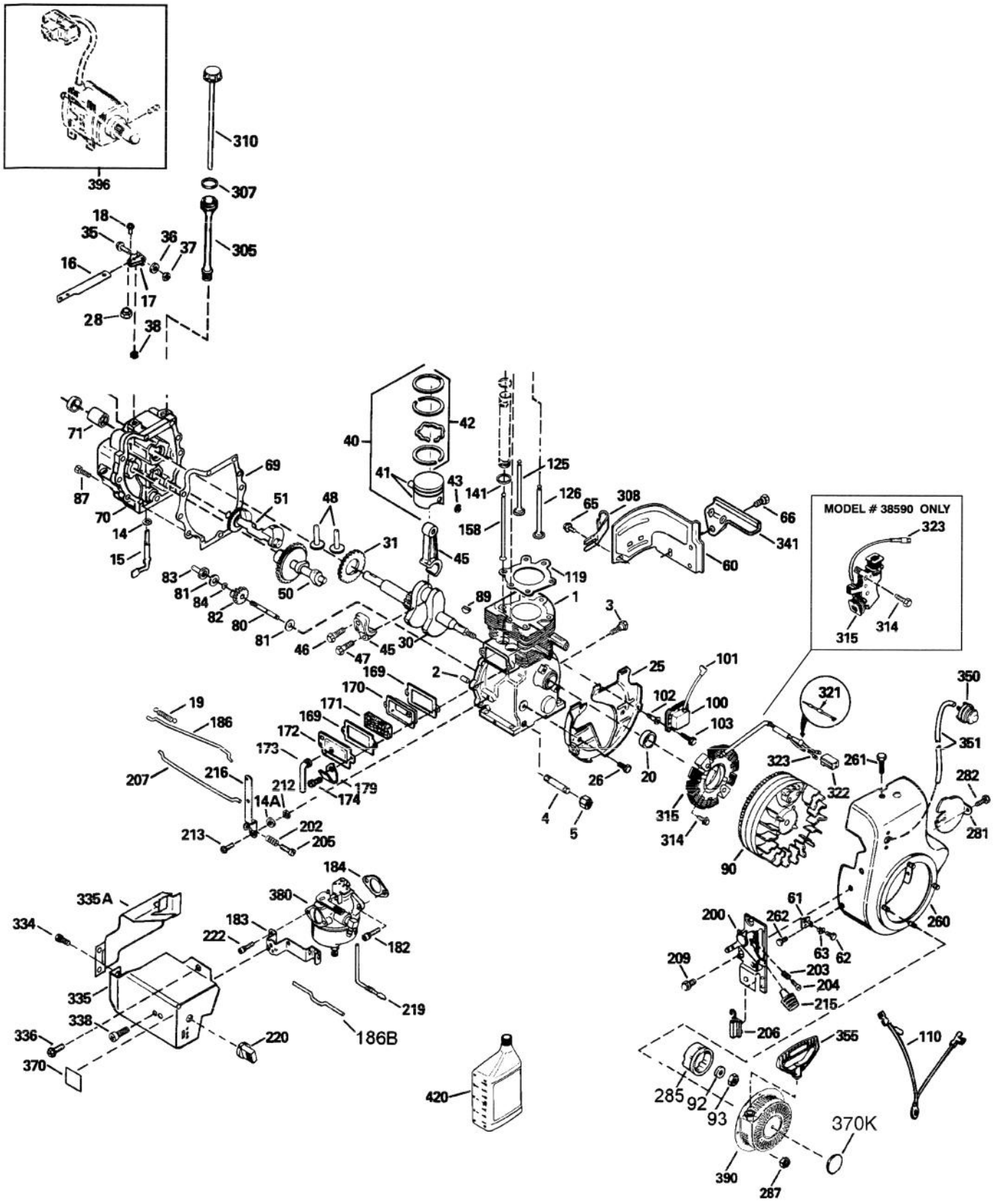

ENGINE ASSEMBLIES
OHSK 120–222023F AND OHSK 120–222024F (Cont.)

Ref. No.	Part No.	Description	No. Used
315	611104	Alternator Coil (3/5 Split) (Incl. Ref.#321–323) (Model 38591 Only)	1
315	611111	Alternator Coil (18 Watt – Incl. Ref.#323) (Model 38590 Only))	1
321	611161	Diode (Model 38591 Only)	1
322	611142	Connector Body (Model 38591 Only)	1
323	611118	Terminal	2
334	650257	Screw	2
335	35698	Carburetor Cover	1
335A	35693	Carburetor Cover	1
336	650765	Screw	1
338	650821	Screw	2
341	35697	Fuel Tank Bracket	1
350	570682	Primer Assembly	1
351	32180C	Primer Line	1
355	590574	Starter Handle	1
370	36261	Instruction Decal	1
370K	36695	Starter Decal	1
380	632536	Carburetor (Incl. Ref.# 184)	1
390	590733	Rewind Starter	1
396	33329D	Electric Starter Motor (Optional)	1
420	730226	SAE 5W30 4–Cycle Engine Oil (Quart)	1

Ref. No.	Part No.	Description	No. Used

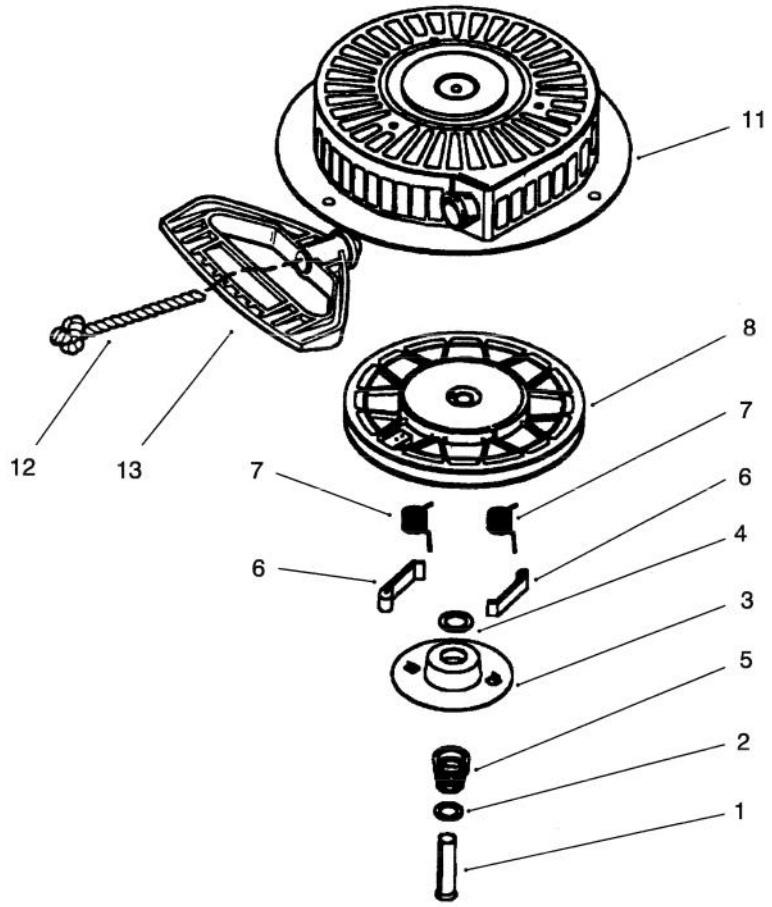

RECOIL STARTER NO. 590733

Ref. No.	Part No.	Description	No. Used
1	590599A	Spring Pin	1
2	590600	Washer	1
3	590696	Retainer	1
4	590601	Washer	1
5	590697	Brake Spring	1
6	590698	Starter Dog	2

Ref. No.	Part No.	Description	No. Used
7	590699	Dog Spring	2
8	590709	Pulley & Rewind Spring	1
11	590734	Starter Housing Asm.	1
12	590535	Starter Rope	1
13	590574	Mitten Grip Handle	1

TORO PART NUMBER INDEX

Part No.	Description	Pg. No.	Ref. No.	Qty.
3–0750	Washer – Retaining	1	2	2
3–4244	Pulley – Idler	6	6	2
5–2490	Bolt – Shoulder	6	35	2
7–0045	Seal – Oil	8	2	2
11–0590	Screw – Hex Hd.	3	33	4
12–3270	Screw	5	49	3
13–3559	Gear – Bevel Reverse 36T	5	59	1
17–4279	Loose Parts Kit	11	*	1
17–4289	Loose Parts kit	11	*	1
20–0980	Bearing – Auger	2	57	2
20–0990	Flange – Bearing (Inner)	2	56	2
20–1000	Flange – Bearing (Outer)	2	58	2
25–5090	Spacer – Auger Hub	2	55	2
26–6110	Flange – Bearing (Front)	2	40	1
26–6120	Flange – Bearing (Rear)	2	38	1
29–9570	Bushing – Yoke	5	45	1
32–251–1	Washer – Flat,	3	20	
36–180	Washer – Lock, Model	3	19	
37–6560	Bushing – Input	8	10	1
38–7820	Bearing – Ball	4	36	2
40–5940	Switch – On/Off	10	21	1
42–657	Screw / Washer, Model	3	12	
42–671	Screw/Washer, Model	3	18	
52–2861	Washer	2	43	4
53–7670	Decal – Warning Auger	1	5	1
54–9810	Assembly – Wire	11	*	1
54–9810	Wire Assembly	12	20	1
54–9871	Headlamp Assembly	12	*	1
62–0120	Gear – Helical	8	15	1
62–0170	Wheel – Index	9	41	1
62–0180	Tang – Index	9	5	1
62–0200	Gear – 27T	4	31	1
62–0210	Gear – 33T	5	43	1
62–0220	Gear – 34T	4	30	1
62–0240	Gear – 45T	4	29	1
62–0250	Gear – 29T	4	32	1
62–0260	Gear – 51T	5	42	1
62–0280	Latch – Lock	10	6	1
62–0290	Cam – Release	10	4	1
62–0300	Tang – Locking	10	3	1
62–0310	Key – Shift	5	56	2
62–0320	Sleeve	4	28	1
62–0330	Shaft – Intermediate	5	40	1
62–0340	Sleeve – Gear 19T	4	34	1
62–0350	Pinion – Bevel 19T	5	53	1
62–0360	Gear – Compound 19T/41T	5	41	1
62–0370	Gear – 41T	4	35	1
62–0380	Hub – Pulley	5	52	1
62–0430	Collar – Shift (Speed)	4	3	1
62–0470	Latch – Arm	6	17	1
62–0480	Gear Case – Lower	5	44	1
62–0490	Gear Case – Upper	4	24	1
62–0500	Gear – 15T	5	48	1
62–0722	Housing – 32	1	6	1
62–0820	Gear – Worm	1	22	1
62–0840	Chute Assembly	1	19	1
62–0860	Link – Gearshift	4	18	1
62–0870	Lever – Gear Shift	4	16	1
62–0880	Lever – Direction Shift	4	5	1
62–0920	Sheave Half – Traction	3	7	1
62–0930	Hub – Sheave	3	5	1
62–0940	Sheave Half – Impeller	3	3	1
62–0970	Pin – Idler	6	9	1
62–1000	Guard – Chain R.H.	6	30	1
62–1010	Guard – Chain L.H.	6	28	1
62–1020	Button – Detent	4	10	1
62–1040	Yoke–Shift	4	26	2
62–1050	Lever – Impeller	10	8	1
62–1060	Lever – Traction	10	24	1
62–1070	Bushing – Lever	10	11	2
62–1080	Shaft – Output	5	37	1
62–1100	Lever – Latch	9	7	1
62–1110	Lever – Index Wheel	9	3	1
62–1120	Lever – Reverse	9	22	1
62–1130	Lever – Reverse	9	20	1
62–1140	Cover – Latch	9	12	1
62–1150	Bushing – Worm	8	16	1
62–1160	Bushing – Intermediate	5	46	4
62–1170	Bushing – Flange	5	38	2
62–1180	Bushing – Output (Flange)	4	1	1
62–1190	Bracket – Bellcrank	4	22	1
62–1230	Washer – Rubber	10	33	1
62–1290	Knob – Shift	9	1	1
62–1300	Pulley – Impeller	1	24	1
62–1310	Pulley – Traction	5	50	1
62–1320	Knob – Chute Control	10	17	1
62–1330	Bolt – Shoulder	6	24	2
62–1350	Bushing – Output	4	27	2
62–1381	Handle – R.H.	10	9	1
62–1430	Retainer – Chute	1	11	3
62–1440	Cover – Engine Frame	2	32	1
62–1460	Gear – Universal	10	32	2
62–1470	Base – Lockout	9	42	1
62–1490	Plate – Guide	10	15	1
62–1520	Cover – Knob	10	19	1
62–1532	Shaft – Auger (32)	8	1	1
62–1640	Lever – Trip	10	12	1
62–1650	Spring – Torsion	9	6	1
62–1690	Cover – Detent	4	11	1
62–1700	Lever – Lockout	9	19	1
62–1710	Spring – Flat	9	16	1
62–1720	Rod – Chute Gear	1	23	1
62–1740	Bracket – Cable	4	7	1
63–2030	Rod – Cross	10	27	1
63–2080	Cover – Belt (Upper)	2	28	1
63–2112	Axle Assembly	6	29	1
63–2150	Frame – Control	9	23	1
63–2160	Rod – Chute Crank	10	16	1
63–2170	Cover – Lever Lock	10	1	1
63–2180	Bracket – Gear	1	7	1
63–2190	Pin – Gearshift Link	4	15	1
63–2200	Cable – Latch	9	39	1
63–2210	Cable – Gearbox	9	38	1
63–2220	Spring – Extension	9	8	1
63–2230	Spring – Extension	9	21	1
63–2240	Spring – Extension	9	17	1
63–2250	Bushing – Axle	6	26	2
63–2270	Spring – Torsion	9	40	1
63–2280	Washer – Thrust	4	33	1
63–2300	Retainer – Cable	1	26	1
63–2400	Decal – Choke, Model 38590	3	*	1
63–2410	Decal – Choke Model 38591	3	17	1
63–2450	Decal – Throttle	3	16	1
63–2480	Decal – #2	9	10	1
63–2600	Bellcrank	4	20	1
63–2610	Pin – Tang	9	9	1
63–2630	Bracket – Shift	9	33	1
63–2650	Screw – Shoulder	9	18	2
63–2670	Plate – Chute Retainer	1	10	3
63–2700	Cable – Impeller	11	41	1
63–2710	Cable – Traction	11	40	1
63–2740	Spring – Torsion	6	36	1
63–2820	Arm – Brake	6	2	1
63–2830	Rod – Shift (Lower)	9	34	1
63–2850	Bracket – Idler Arm	6	3	1
63–2870	Spring – Extension	6	14	2
63–2881	Spring – Torsion	6	13	1
63–2890	Spring – Compression	4	9	1
63–2900	Washer – Plastic	1	17	2
63–2910	Spring – Torsion	10	7	1
63–2920	Spring – Extension	4	4	1
63–2930	Chain – Drive	3	29	1
63–2955	Belt – Traction	3	6	1
63–2967	Belt – Impeller	3	4	1

*Not Illustrated

TORO PART NUMBER INDEX (Cont.)

Part No.	Description	Pg. No.	Ref. No.	Qty.
63–2990	Frame – Transmission	3	31	1
63–3020	Guard – Chute	1	14	1
63–3050	Decal – Lever	10	25	1
63–3130	Clip – Chute Guard	1	12	1
63–3290	Cover – Cable	2	29	10
63–3340	Washer	6	22	4
63–3380	Spacer – Traction Lever	10	22	1
63–3410	Bolt – Shoulder	4	13	1
63–3420	Harness – Wire	11	*	1
63–3450	Bearing – Impeller	2	39	1
63–8360	Key – Switch	10	20	1
66–4100	Plate – R.H.	2	*	1
66–4110	Plate – L.H.	2	34	1
66–6840	Decal – Hot, Model 38590	3	14	1
66–6850	Decal – Panel Top	10	14	1
66–6860	Decal – Warning	11	38	1
66–6860	Decal – Warning	7	40	1
66–6900	Assembly – Wire, Adapter	11	*	1
66–6900	Wire Assembly – Adaptor	12	*	1
66–6980	Frame – Engine	2	31	1
66–7720	Rod – Latch	6	18	1
66–7730	Clevis	9	30	1
66–7740	Pivot Arm Assembly	6	23	2
66–7760	Blade – Scraper	2	45	1
66–7811	Shaft – Impeller	8	6	1
66–7821	Plate – Side R.H.	1	3	1
66–7831	Plate – Side L.H.	2	46	1
66–7850	Handlegrip	10	10	2
66–7920	Impeller	2	50	1
66–8010	Spacer	2	51	2
66–8030	Transmission Assembly	3	30	1
66–8060	Pad – Brake	7	42	1
66–8091	Handle – L.H.	10	29	1
66–8100	Panel – Control	10	13	1
67–5870	Gear – Bevel 36T	5	57	1
67–5880	Collar – Shift	5	58	1
67–9230	Tire & Wheel Assembly	6	34	2
67–9240	Rod – Shift (Upper)	9	2	1
67–9250	Retainer – Shift Rod	9	28	1
68–4310	Gear – 26T	5	47	1
68–4320	Sleeve – Shift	5	55	1
68–7110	Mount – Lamp	12	6	1
68–7140	Bolt – U	12	10	1
68–7452	Auger – R.H.	2	54	1
68–7462	Auger – L.H.	2	*	1
68–7510	Guide – Belt	3	8	1
68–8410	Cover – Belt (Lower)	2	41	1
68–9200	Differential Asm	7	59	1
68–9200	Housing – L.H.	7	44	1
68–9250	Coupling – Differential	7	48	1
68–9260	Spring – Lockout	7	49	1
68–9270	Sprocket (32T)	7	43	1
68–9310	Guard – Chain R.H.	7	58	1
68–9390	Decal – Differential	2	61	1
74–1440	Skid Assembly	2	44	2
74–1540	Gearcase Assembly – L.H.	8	13	1
74–1550	Gearcase Assembly – R.H.	8	4	1
74–1562	Auger Gearbox Assembly	2	53	1
78–2920	Joint – Ball	9	36	1
78–2920	Joint– Ball	3	27	1
88–0810	Spring – Extension	11	39	1
93–1265	Decal – Hot , Model 38591	3	*	1
93–8029	Decal – Panel Front	10	36	1
93–8045	Arm – Traction Idler	6	10	1
93–8046	Arm – Impeller Idler	6	11	1
94–2559	Decal – Danger Chute	1	*	1
94–2568	Decal – Warning Auger	1	*	1
94–2572	Decal – Primer	3	15	1
94–2575	Decal – Warning	11	*	1
94–2575	Decal – Warning	7	*	1
94–2578	Decal – Panel Top	10	*	1
94–2782	Cap – Wire, Model 38590	3	36	1
94–6961	Screw – Pan Hd.	9	11	2
94–6961	Screw – Pan Hd.	10	35	2
94–8079	Decal – Danger Chute	1	20	1
127–21	Guard–Muffler, Model	3	13	
127–24	Guard–Muffler,	3	21	
218–16	Bulb – Sealed Beam	12	19	1
218–473	Boot – Switch	12	1	1
218–552	Bucket – Headlamp	12	3	1
218–553	Switch Assembly	12	2	1
218–554	Bracket	12	4	1
218–556	Bracket – U	12	16	1
2210–250	Screw	10	2	3
2210–250	Screw, Wire Harness Hook–Up	3	*	1
252–59	Washer – Thrust	4	2	3
252–71	Bearing – Thrust	8	5	2
252–76	Bearing – Thrust	8	9	1
252–78	Washer – Thrust	8	8	2
252–80	Washer – Thrust	2	36	1
253–149	Seal – Input	8	11	1
256–237	Bushing – Sleeve	8	3	2
256–296	Bushing – Nyliner	9	31	2
257–9	Washer – Thrust	9	14	1
257–10	Washer – Thrust	5	39	4
269–23	Rivet	2	30	4
281–1	Plug – Pipe Sq. Hd.	8	14	1
283–3	Pin – Clevis	4	19	1
321–3	Screw – Hex Hd.	2	60	8
321–9	Screw – Cap Hex. Hd.	9	29	1
321–15	Screw – Cap Hex Hd.	5	54	1
321–44	Screw – Hex. Hd.	2	52	2
322–12	Bolt – Auger	2	59	2
322–13	Screw – Hex. Flange Hd.	12	15	1
323–6	Screw – Hex Hd.	1	1	2
323–7	Screw – Hex Hd.	6	8	2
3210–1	Screw – Hex Hd.	3	35	2
3212–8	Screw – Hex. Hd.	3	1	1
3217–6	Nut – Hex	12	21	1
3217–7	Nut – Hex.	12	8	1
3220–3	Nut – Jam	9	35	1
3220–3	Nut – Lock	3	26	1
3230–2	Bolt – Carriage	1	8	1
3230–23	Screw – Carriage	2	48	11
3231–2	Bolt – Carriage	12	17	1
3234–5	Screw – Hex Washer Hd.	2	62	4
3234–7	Screw	2	33	6
3234–7	Screw – Hex Flange Hd.	3	25	4
3234–7	Screw – Hex Flange Hd.	10	26	6
3234–7	Screw – Hex Flange Hd.	7	41	2
3234–13	Screw – Hex. Hd.	6	5	1
3234–28	Screw – Hex Flange Hd.	1	4	12
3242–4	Screw – Set Sq. Hd.	1	25	2
3253–4	Washer – Lock	3	34	2
3253–6	Washer – Lock	3	2	1
3253–21	Washer – Lock	12	7	1
3255–8	Washer – Lock	12	5	2
3256–1	Washer – Flat	6	21	2
3256–1	Washer – Flat	9	27	2
3256–14	Washer – Flat	1	16	1
3256–14	Washer – Flat	11	43	2
3256–23	Washer – Flat	12	11	2
3256–23	Washer – Flat	9	24	3
3256–23	Washer – Flat	2	42	1
3256–26	Washer – Flat	12	22	1
3256–38	Washer – Flat	6	12	1
3256–41	Washer	3	37	1
3256–61	Washer – Flat	1	21	1
3257–10	Key – Woodruff	8	12	1
3257–23	Key – Woodruff	2	35	1
3257–41	Key – Woodruff	7	53	2
3272–1	Pin – Cotter	4	17	1
3274–13	Screw – Machine	1	13	3
3290–243	Pin – Klik	6	38	2

*Not Illustrated

TORO PART NUMBER INDEX (Cont.)

Part No.	Description	Pg. No.	Ref. No.	Qty.
3290–320	Nut – Push	9	15	1
3290–320	Nut – Push	10	18	2
3290–326	Nut – Push	1	15	2
3290–359	Screw	10	28	1
3290–378	Tie – Cable	12	9	2
3290–378	Tie – Cable	10	30	4
3290–422	Nut – Push	9	4	1
3290–456	Washer – Belleville	9	37	1
3290–461	Washer – Belleville	6	16	2
3290–461	Washer – Belleville	3	32	4
3290–476	Fastener – Panel	6	37	1
3290–477	Washer – Curved	4	14	1
3296–2	Nut – Lock	1	9	4
3296–2	Nut – Lock	10	23	1
3296–6	Nut – Lock	3	28	1
3296–6	Nut – Lock	9	32	1
3296–23	Nut – Lock	6	25	2
3296–29	Nut – Lock	12	12	2
3296–29	Nut – Lock	9	25	7
3296–29	Nut – Lock	2	37	16
3296–39	Nut – Lock	6	15	2
3296–42	Nut – Lock	6	4	1
3296–42	Nut – Lock	4	23	1
3296–42	Nut – Lock	9	26	1
3296–42	Nut – Lock	2	49	10
3296–47	Nut	7	56	6
3296–47	Nut – Lock	11	37	4
3296–47	Nut – Lock	7	39	2
3296–47	Nut – Lock	2	47	12
3296–59	Nut – Lock	6	7	2
32104–71	Screw – Pan Hd.	4	12	1
32104–76	Screw – Self Tapping	10	34	2
32104–95	Screw – Hex Washer Hd.	4	21	2
32104–121	Screw – Hex Flange Hd.	6	31	3
32120–46	Ring – Retaining	6	1	2
32120–46	Ring – Retaining	9	13	1
32121–9	Pin – Roll	6	19	2
32121–50	Pin – Roll	10	31	2
32121–106	Pin – Coil	4	6	1
32121–120	Pin – Coil	5	60	2
32122–32	Screw	1	18	1
32128–20	Nut – Lock	3	24	4
32128–32	Nut – Flange Lock	5	51	1
32128–35	Nut – Flange Lock	12	18	1
32144–4	Screw – Hex Flange Hd.	1	27	6
32144–4	Screw – Hex Flange Hd.	6	20	2
32144–4	Screw – Self Tapping	4	8	2
32144–73	Screw – Hex. Washer Hd.	7	51	1
32144–86	Screw – Hex Washer Hd.	4	25	6
32144–110	Screw – Hex Washer Hd.	8	17	9
32151–33	Ring – Snap	8	7	1
32151–66	Ring – Retaining	10	5	1
505–101	Grease – 14.5 oz. Cartridge	5	*	1
505–129	Sealant – 100g Tube	8	*	1

OPTIONAL EQUIPMENT

110 Vac Electric Starter Kit ..... Part No. 37–4810
Drift Breaker ..... Part No. 66–7980
Light Kit (Standard On Model 38591) Part No. 66–7941
Snow Cab Kit ..... Part No. 68–9500
Weight Kit (Required W/Snow Cab) . Part No. 74–1190
Tire Chain Kit (Do Not Use W/68–9300) Part No. 63–3040
12V Ele. Starter Kit (Model 38591 Only) Part No. 93–8040
Differential Kit (Model 38591 Only) . Part No. 68–9300

*Not Illustrated

PRODUCT CHANGES

In an effort to make improvements available to TORO owners as quickly as possible, minor changes are incorporated into Toro's products from time to time that do not become immediately shown in the Parts Catalog. If such a change has been made in your unit, which is not reflected in your manual, see your TORO Distributor or his Authorized TORO Service Dealer for information and part numbers.

COUNTRIES OTHER THAN THE UNITED STATES OR CANADA

Customers who have purchased TORO products exported from the United States or Canada should contact their Toro Distributor (Dealer) to obtain guarantee policies for your country, province or state. If for any reason you are dissatisfied with your Distributor's service or have difficulty obtaining guarantee information, contact the TORO importer. If all other remedies fail, you may contact us at The Toro Company.

MAINTENANCE RECORD

Date								

Compliance with Radio Interference Regulations Certified.
Certifie Conforme au Reglement sur le Brouillage Radioelectrique.

Litho in U.S.A.
GG-96897