FORM NO. 3318–186 Rev. B

TORO®

WHEEL HORSE® LAWN TRACTOR

FOR 32” AND 38” MOWERS

SET-UP INSTRUCTIONS

Loose Parts

Note: Use the chart below to verify all parts have been shipped.

DESCRIPTION	QTY.	USE
Front Wheel	2	Install front wheels.
Shim Washer (as required)	2	
Flat Washer	2	
Cotter Pin	2	
Hub Cap	2	
Steering Wheel	1	Install steering wheel.
Spirol Pin	1	
Seat	1	Install the seat.
Knob	1	
Flat Washer	1	
Wire Clip (on seat pan)	1	
Bolt 1/4–20 x 3/4”	2	Install battery cables.
Wing nut	2	
Spring Hook	1	Used to install lift assist spring.
Key	2	Use in ignition switch.
Operator’s Manual	1	Read and watch before operating tractor.
Safety Booklet	1	
Safety Video	1	
Registration Card	1	Fill out and mail the card.

©The TORO Company – 1997
All Rights Reserved

Printed in USA

Install Front Wheels

Note: If wheels are already installed, refer to Check Tire Pressure (below).

1. Install shim washers onto axle.

2. Install wheel onto axle with valve stem out.

3. Slide the flat washer onto the axle. Insert cotter pin through the axle and bend the ends of the pin apart (Fig. 1). If cotter pin does not fit, remove shim washer(s) as required.

4. Push the hub cap (Fig. 1) onto the end of the axle.

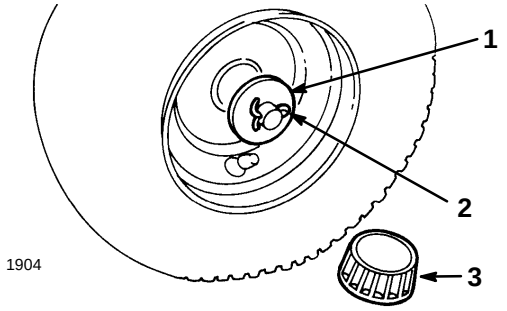

Figure 1

1. Flat washer
2. Cotter pin
3. Hub cap

5. Repeat steps 1–4 on opposite side.

6. Grease the wheel bearings until grease comes out of bearing seal area.

Check Tire Pressure

Check front and rear tire pressure. Set to 12 psi (83 kPa).

Install Steering Wheel

1. Move front wheels straight ahead.

2. Slide the steering wheel over shaft. Line up the hole in the steering wheel with the hole in the shaft (Fig. 2). From the seat you should be able to read the brand logo on the steering wheel.

3. To align the holes, insert a punch or long nail partially through the holes in the steering wheel and shaft. Then insert the spirol pin into the hole on the opposite side.

4. Using a hammer, drive the spirol pin in until it is flush with the outside of the steering wheel (Fig. 2).

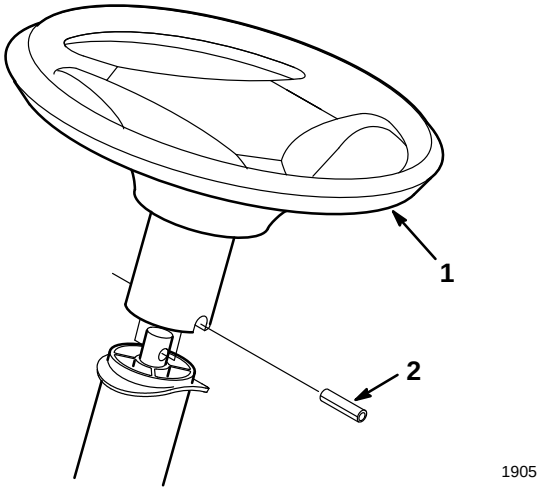

Figure 2

1. Steering wheel
2. Spirol pin

Install Seat

Note: If the seat is already installed, proceed to Activate The Battery, page 3.

1. Insert seat switch wire cable through the hole in the seat base (Fig. 3).

2. Position the seat onto the seat base by inserting the two shoulder bolts through key hole openings at the end of both slots (Fig. 3).

3. Thread the knob and flat washer into the rear center hole in the seat (Fig. 3). Adjust the seat and tighten the knob.

4. Push the seat switch connector fully into the wire harness connector (Fig. 3).

5. Secure the seat switch wire cable to seat base with wire clip (Fig. 3).

Note: Check seat switch wire routing, it must not be pinched in seat brackets.

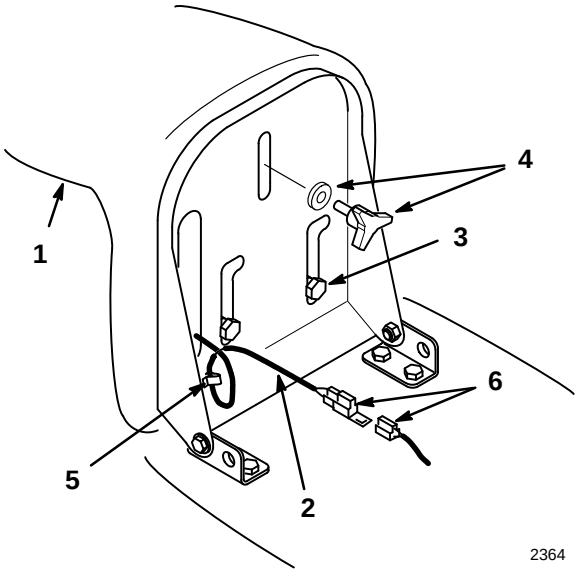

Figure 3

1. Seat
2. Wire and connector
3. Shoulder bolts
4. Knob and flat washer
5. Wire clip
6. Connectors

Activate the Battery

Bulk electrolyte with 1.260 specific gravity must be purchased from a local battery supply outlet.

1. Remove the battery and battery box from the tractor: refer to Operator's Manual, Removing the Battery.

IMPORTANT: Be careful not to damage the long vent tube when removing the battery box.

⚠ DANGER

POTENTIAL HAZARD

- **Battery electrolyte contains sulfuric acid which is a deadly poison and it causes severe burns.**

WHAT CAN HAPPEN

- **If you carelessly drink electrolyte you could die or if it gets onto your skin you will be burned.**

HOW TO AVOID THE HAZARD

- **Do not drink electrolyte and avoid contact with skin, eyes or clothing. Wear safety glasses to shield your eyes and rubber gloves to protect your hands.**
- **Fill the battery where clean water is always available for flushing the skin.**
- **Follow all instructions and comply with all safety messages on the electrolyte container.**

2. Unscrew six filler caps from the battery. Slowly pour electrolyte into each cell until the level is up to the "UPPER" line on the battery case (Fig. 4).

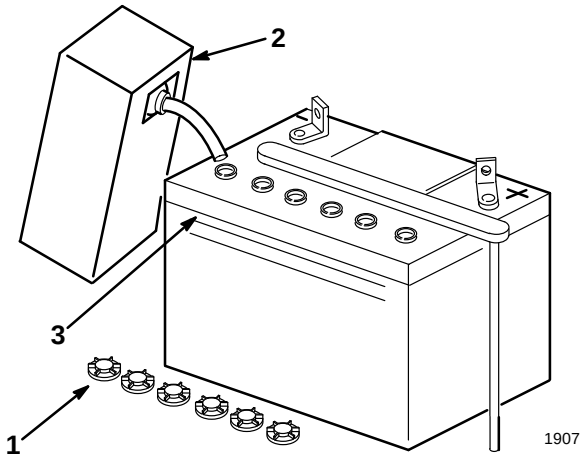

Figure 4

1. Filler caps
2. Electrolyte
3. Upper line

3. Leave the filler caps off and connect a 3 to 4 amp battery charger to the battery posts (Fig. 5). Charge the battery at a rate of 4 amperes or less for 4 hours (12 volts).

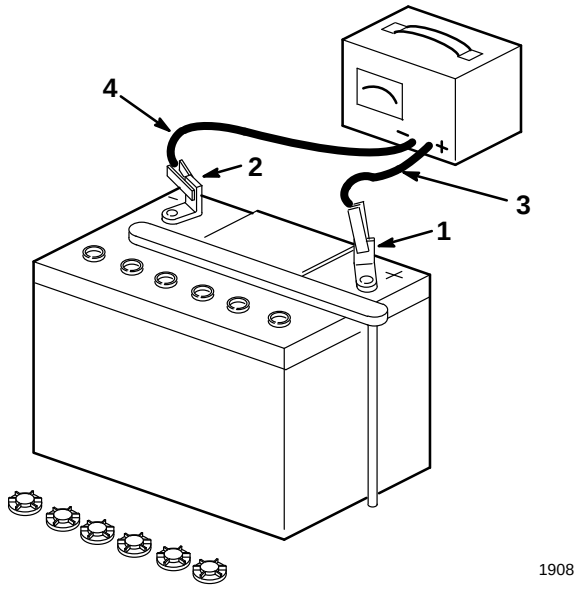

Figure 5

1. Positive post
2. Negative post
3. Charger red (+) wire
4. Charger black (–) wire

⚠ WARNING

POTENTIAL HAZARD
- **Charging battery produces gasses.**

WHAT CAN HAPPEN
- **Battery gasses can explode.**

HOW TO AVOID THE HAZARD
- **Keep cigarettes, sparks and flames away from battery.**

4. When the battery is fully charged, disconnect the charger from the electrical outlet and from the negative and positive battery posts (Fig. 5).

5. Slowly pour electrolyte into each cell until the level is once again up to the “UPPER” line on the battery case (Fig. 4).

6. Install the battery and battery box in the tractor: refer to the Operator’s Manual, Installing the Battery.

Fill Crankcase with Oil

The tractor is shipped from the factory without oil in the engine crankcase: refer to the Operator’s Manual, Engine Oil Specifications for oil type, viscosity, and crankcase capacity. Only add about 80% of the specified amount of oil. Then check the oil level and add only enough oil to raise the level to the “FULL” mark on the dipstick.

Mower Discharge Chute

Remove roll pin from discharge sure spring and discard. This is for shipment only. Make sure spring returns discharge chute to the full down position.

Level the Mower

Level the mower from side-to-side and set front-to-rear blade slope. Refer to the Operator’s Manual, Side-to-Side Mower Leveling and Front-to-Rear Blade Slope.

Lubricate the Tractor

Refer to the Operator’s Manual, Greasing and Lubrication.

Insert Key into Switch

Check Safety System

Refer to the Operator’s Manual, Checking Safety System.

Purge Hydro Transaxle (Hydro Drive Tractors Only)

During handling and shipping air can be introduced into the hydro transaxle. To achieve proper performance all trapped air must be removed.

1. Place tractor on a flat level surface.

2. Place the drive control in the “Push” position (Fig. 6).

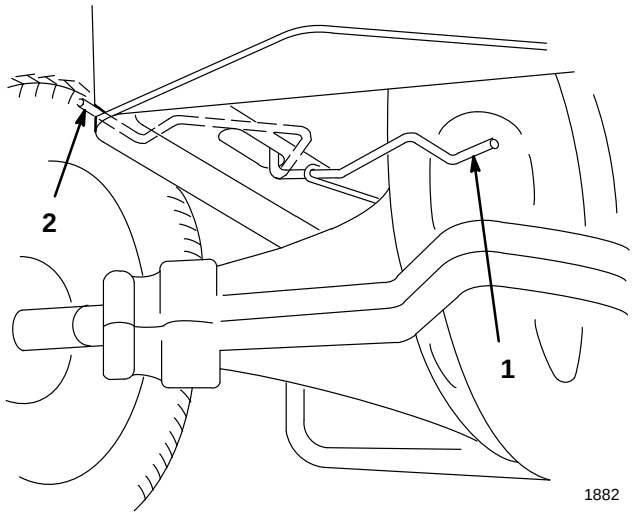

Figure 6

1. Operate position
2. Push position

3. Run engine at a low idle and move traction control pedal forward for five (5) seconds then reverse for five (5) seconds. Repeat three (3) times.

4. Place the drive control in the “Operate” position (Fig. 6). Drive the tractor forward then reverse approximately five (5) feet. Repeat three (3) times.

Check Hydro Neutral Position (Hydro Drive Tractors Only)

Adjustment is required if the tractor creeps without the traction control pedal being depressed.

1. Run engine at a low idle and move traction control pedal forward, then release. Move traction control pedal reverse, then release. If the tractor creeps adjust as follows:

2. Raise the rear wheels off the ground and support with jackstands.

3. Loosen locknut securing adjustment (Fig. 7).

4. Move adjustment stud up or down until creep is minimized (Fig. 7). There may still be some wheel rotation with wheels off the ground.

5. Tighten the locknut (Fig. 7). Move the traction control pedal forward and reverse and allow it to center. Verify that there is no creep with the wheels on the ground.

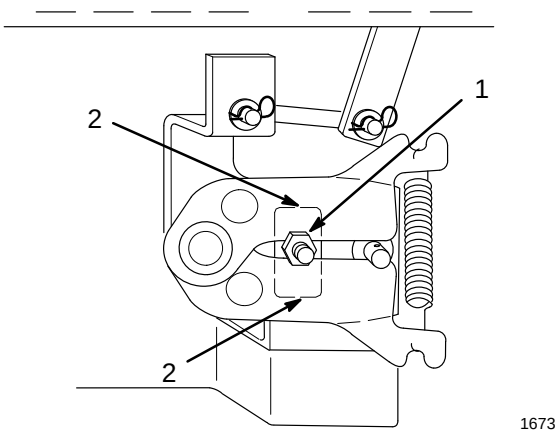

Figure 7

1. Locknut
2. Stop

Check Traction Control Pedal (Hydro Drive Tractors Only)

After adjusting the hydro neutral position it is necessary to check the traction control pedal. While pressing the control pedal full forward and full reverse it must not contact the footrest pad before hitting the stop(s) at the transaxle (Fig. 7).

1. If contact is made with the foot pad, before hitting stop(s) on transaxle (Fig. 7), in either forward or reverse directions, adjustment is required.

2. Loosen the capscrews below the right footrest. Slide the pedal in the slots away from the direction that made contact with the footrest (Fig. 8).

3. Tighten capscrews and recheck traction control pedal for contact with stop(s) on transaxle and footrest.

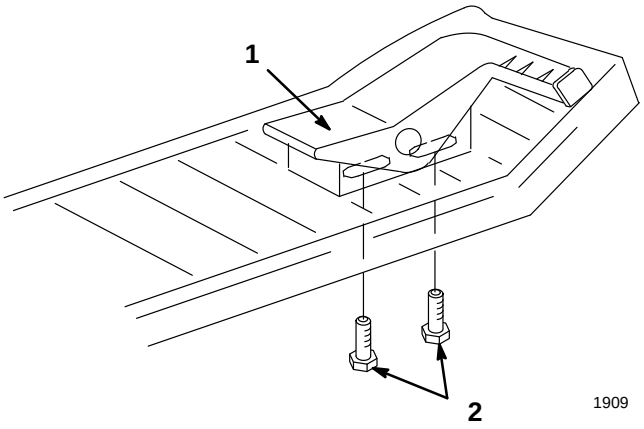

Figure 8

1. Traction control pedal
2. Adjusting capscrews

Check Shift Cable Adjustment (Gear Drive Tractors Only)

Cable adjustment is required if the ground speed selector lever does not move firmly toward the numbers on the shift plate when released or it is difficult to shift between gears on-the-go (Fig. 9).

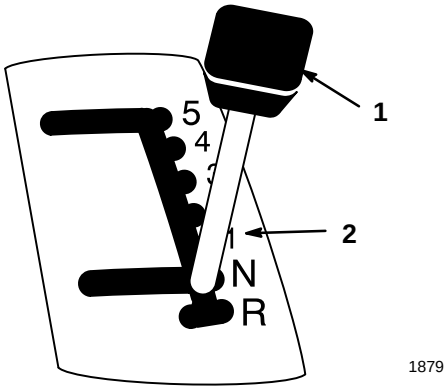

Figure 9

1. Gear select lever
2. Numbers

1. If either of the above conditions exist, check that belt guides are positioned no more than 1/8 inch away from the engine and transmission pulleys.

2. Check the cable tension. Cable should be taught and have 1/2 inch movement with slight pressure applied (Fig. 10).

3. Move gear select lever and note gap between lever and edge of gate. There should be about 1/4 inch of free play before cable is taught.

4. To adjust the cable tension loosen the front cable guide, located on tractor brace above deck pulley. Slide guide sideways as required for proper tension (Fig. 10).

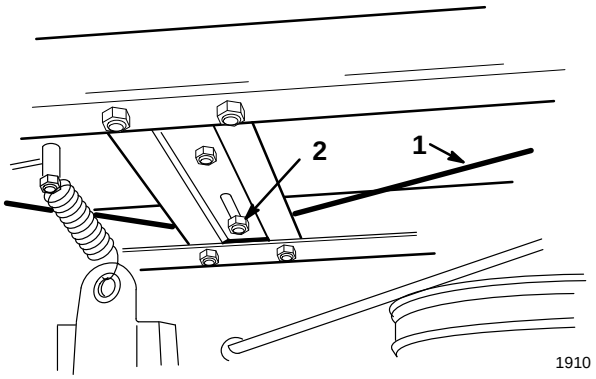

Figure 10

1. Cable
2. Cable guide

Test Drive the Tractor

Make sure all electrical and mechanical systems are operating properly. See Operator's Manual for proper control function.

Check Mower Adjustment

Make sure mower side-to-side level and front-to-rear blade slope is properly adjusted. See Operator's Manual for proper procedure.


TORO®