FORM NO. 3319–211 REV.A

TORO®

Carefree® Cordless

46cm

24 Volt Electric Mower

Model No. 21040–8900001 & Up

Parts Catalog

ORDERING REPLACEMENT PARTS

To order replacement parts, please supply: the part number, the quantity, and the description of each part desired.

Contents

Description	Page
Deck, Liner and Wheel Assembly	1
Motor, Batteries and Blade Assembly	2
Cover, Mulch Plug and Panel Assembly	3
Handle and Controls Assembly	4
Electrical Wire Diagram and Side Discharge Chute	5

Note:

Accessories

Description	Model / Parts No.
18” Side Bag Kit	59298

Part Description Abbreviations

Part descriptions in this catalog may include the following abbreviations.

Abbreviation	Meaning
AR	as required
ASM	assembly
CARR	carriage
DEG	degrees
FH	flat head
GA	gauge
HF	hex flange
HFW	hex flange washer
HH	hex head
HHF	hex head flange
HHST	hex head self tapping
HJ	hex jam
HOC	height-of-cut
HS	hex socket
HSBH	hex socket button head
HSFH	hex socket flat head
HSH	hex socket head
HWH	hex washer head
HWHTF	hex washer head thread forming
INC	incorporated
LH	left hand
PH	pan head
PPH	Phillips pan head
PTO	power take off
RH	right hand
SFH	slotted fillister head
SH	square head
SHWH	slotted hex washer head
SPH	slotted pan head
STD	standard
TAP	self tapping
TH	truss head
TTH	Torx truss head
WH	wing head

Important Format Explanations

This catalog uses special formats to convey information in illustrations and parts lists. Specifically, one format is used in conjunction with service assemblies and another with quantities associated with reference numbers.

© The TORO Company — 1996, rev. 1997
All Rights Reserved

Service Assemblies

Parts within service assemblies have reference numbers in the form *X:Y. X* is the reference number of the service assembly and *Y* is a sequential number unique to each part within the service assembly.

For example, a wheel assembly might be identified by reference number 6, the tire by 6:1, the valve by 6:2, and the wheel by 6:3. When you order the assembly identified by reference number 6, you receive all parts identified by reference numbers 6:1, 6:2, and 6:3. However, you may also order any part individually.

Reference numbers of this type appear in part lists and as callouts in illustrations.

Reference Numbers with Quantities

Illustrations may have a quantity in parentheses next to a reference number, in the form *X (Y). X* is the reference number. *Y* in parentheses is the quantity of the part identified by the reference number.

For example, the illustration callout 4 (2) indicates that two parts are used in that instance.

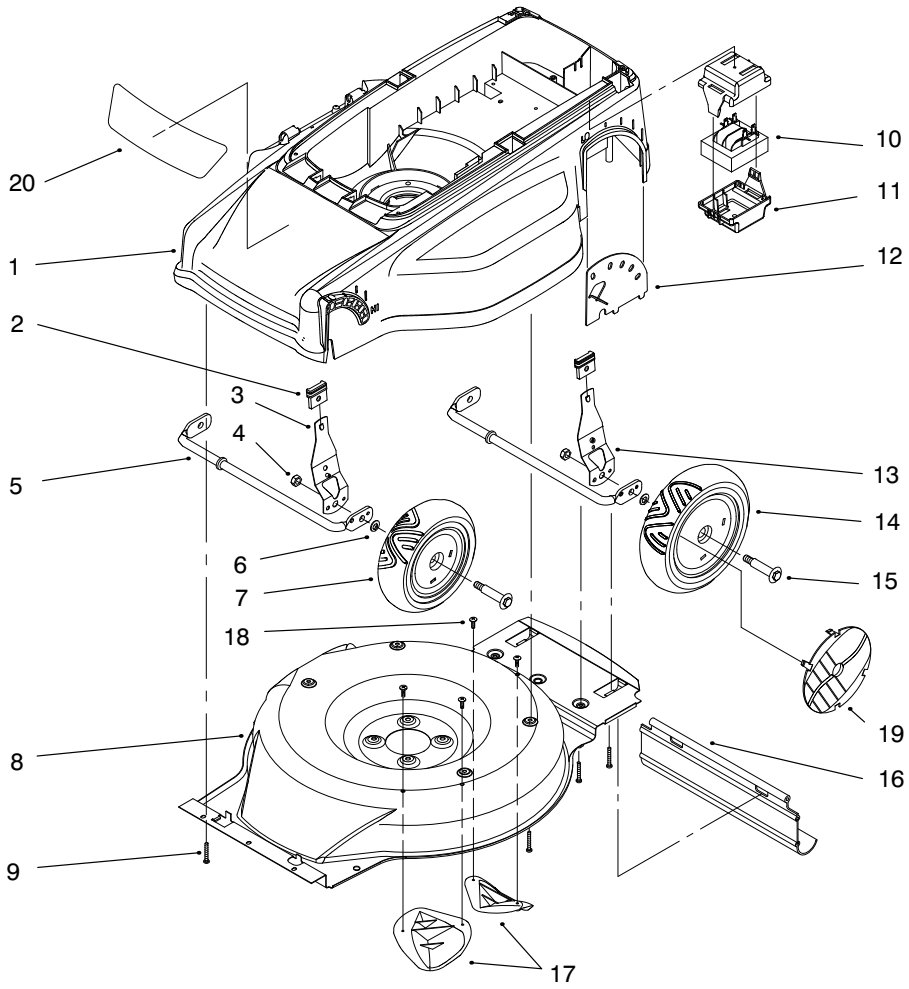

Sheet No.:2

Deck, Liner and Wheel Assembly

Ref. No.	Part No.	Qty.	Description
1	95–5165	1	ASM–Deck
2	92–1008	2	Knob–Height Adjust
3	94–3870	1	ASM–Front HOC Lever
4	610358	4	Nut–Lock
5	93–3952	2	Axle
6	40–1940	4	Washer
7	92–9586	2	ASM–Wheel
8	95–5167	1	ASM–Liner
9	93–3985	11	Screw–PPH
10	95–1554	1	Transformer–24 Volt
11	93–3343	2	Housing–Transformer
12	95–5037	1	Plate–HOC
13	94–3871	1	ASM–Rear HOC Lever
14	93–0344	2	ASM–Wheel
15	92–1057	4	Bolt–Shoulder
16	94–7417	1	Trailing Shield
17	76–2160	2	Plate–Kicker
18	94–6961	4	Screw
19	95–5030	1	Cover–Wheel
20	95–5007	1	Decal–Recycler

Ref. No.	Part No.	Qty.	Description

* Not Illustrated

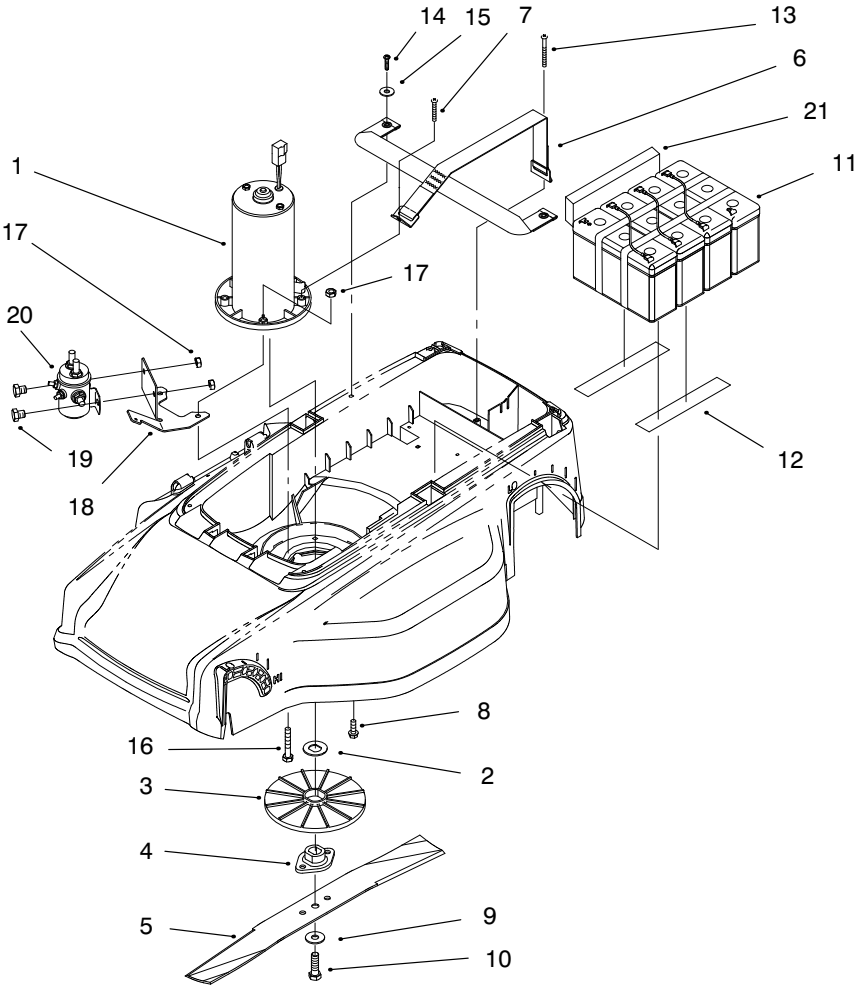

Sheet No.:3

Motor, Batteries and Blade Assembly

Ref. No.	Part No.	Qty.	Description
1	94–6918	1	ASM–Motor 24 Volt
2	93–3342	1	Washer
3	93–3340	1	Fan
4	93–3341	1	Bushing
5	93–3953	1	Blade
6	95–5026	1	ASM–Battery Strap
7	32144–8	1	Screw–PPH
8	32144–44	2	Screw–HWHTF
9	3290–340	1	Washer–Spring
10	93–3987	1	Bolt–Blade
11	95–5163	1	ASM–Battery (Incl. Ref #12)
12	94–1197	2	Tape–Foam
13	93–3986	1	Screw–PPH
14	94–4496	2	Screw
15	3256–49	2	Washer–Flat
16	32144–110	2	Screw–HWHTF
17	3296–56	4	Nut–Lock
18	95–3027	1	Bracket–Solenoid
19	3234–26	2	Screw–HHF
20	95–3255	1	Solenoid–24 Volt
21	95–5180	1	Spacer – Foam

Ref. No.	Part No.	Qty.	Description

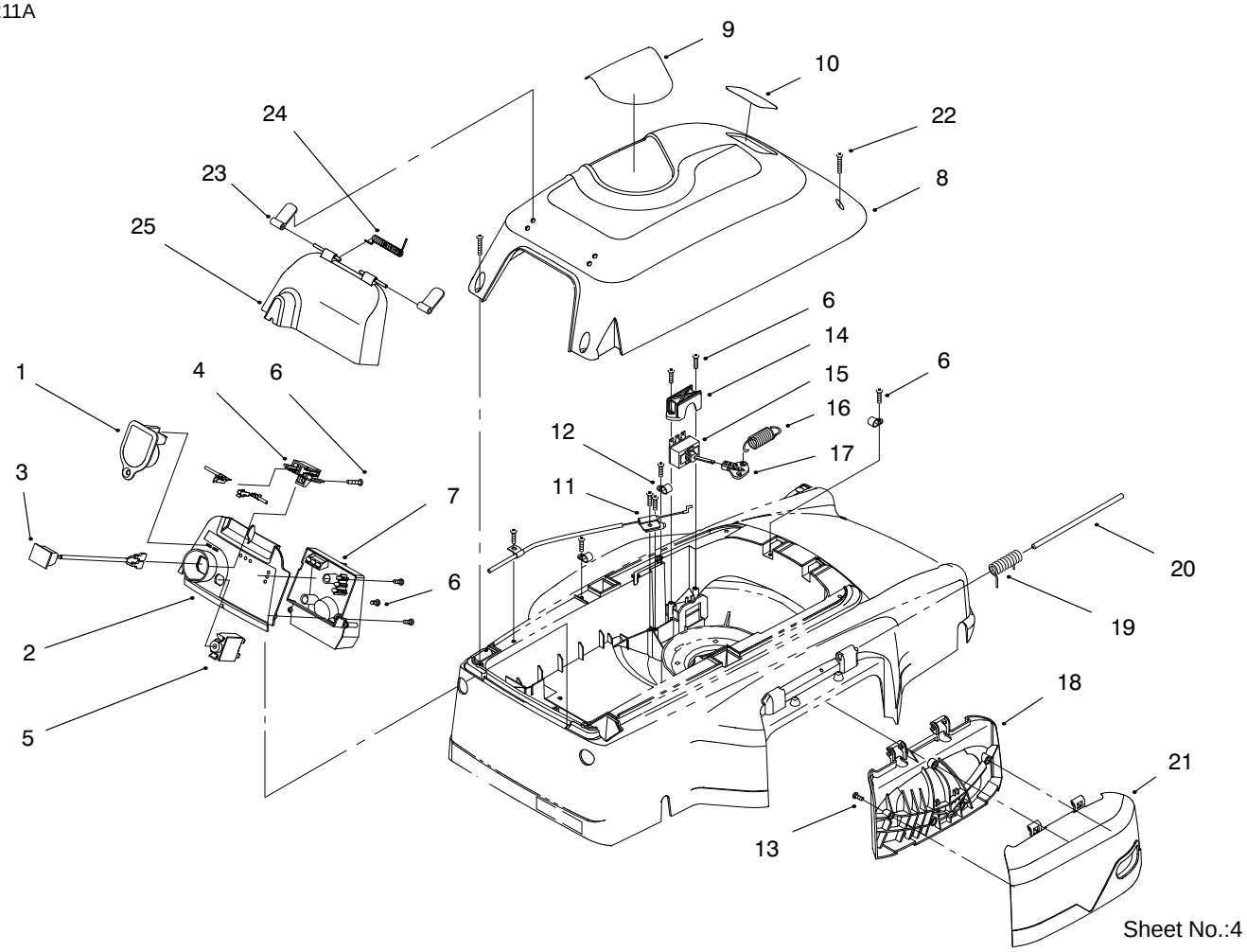

Sheet No.:4

Cover, Mulch Plug and Panel Assembly

Ref. No.	Part No.	Qty.	Description
1	95–5028	1	Key
2	95–5160	1	ASM–Panel
3	95–5024	1	ASM–Plug
4	95–5042	1	Housing–Plug
5	93–3982	1	Circuit Breaker
6	94–4496	12	Screw
7	95–5170	1	ASM–Circuit Coard
8	95–5168	1	ASM–Cover
9	95–5008	1	Decal–Cover
10	92–2289	1	Plate–Logo
11	93–3975	1	Bracket–Cable
12	94–1194	3	Clamp–Cable
13	94–6961	5	Screw
14	93–3345	1	Clamp–Switch
15	93–3970	1	Switch–Toggle
16	93–3999	1	Spring–Switch
17	93–3346	1	Cover–Lever
18	93–3956	1	Mulch Plug–Inside
19	94–3865	1	Spring–Torsion
20	93–3990	1	Pin–Hinge
21	95–5033	1	Mulch Plug–Outside
22	93–3986	4	Screw–PPH
23	95–5025	2	Tab–Shield
24	95–5022	1	Spring–Torsion
25	95–5041	1	Shield–Rain

Ref. No.	Part No.	Qty.	Description

* Not Illustrated

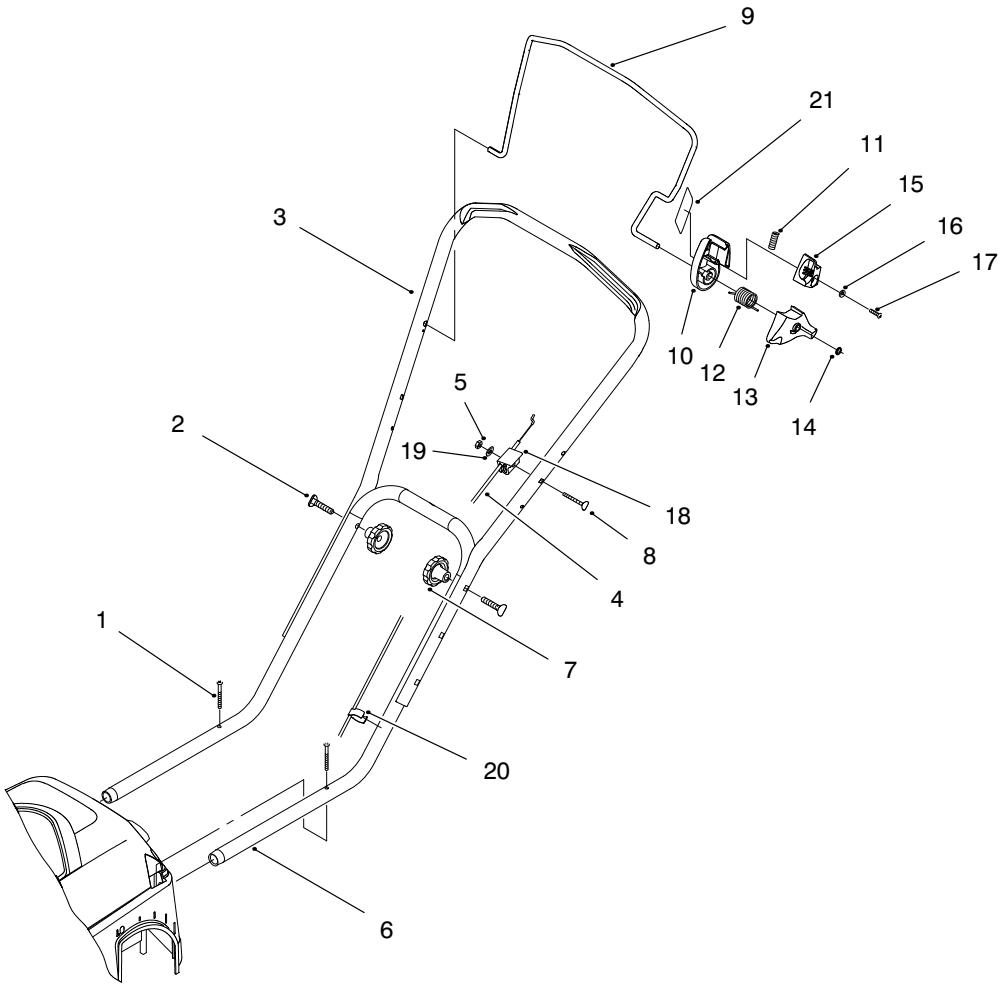

Sheet No.:5

Handle and Controls Assembly

Ref. No.	Part No.	Qty.	Description
1	93–3986	2	Screw–PPH
2	92–2260	2	Screw–Handle
3	95–2742	1	Handle–Upper
4	93–3978	1	Cable–Control
5	3296–8	1	Nut–Lock
6	93–3972	1	Handle–Lower
7	19–4050	2	Knob
8	92–2269	1	Screw–Handle
9	95–3000	1	Bail–Comfort Grip
10	93–3969	1	Housing–Bail
11	94–3851	1	Spring–Slide
12	94–1154	1	Spring–Bail
13	93–3967	1	Cam
14	94–1191	1	Nut–Push
15	93–3968	1	Slide
16	94–3868	1	Washer–Flat
17	94–4496	1	Screw
18	94–7407	1	Support–Cable
19	3256–2	1	Washer–Flat
20	94–7409	1	Clip–Cable
21	95–5157	1	Decal–On/Off

Ref. No.	Part No.	Qty.	Description

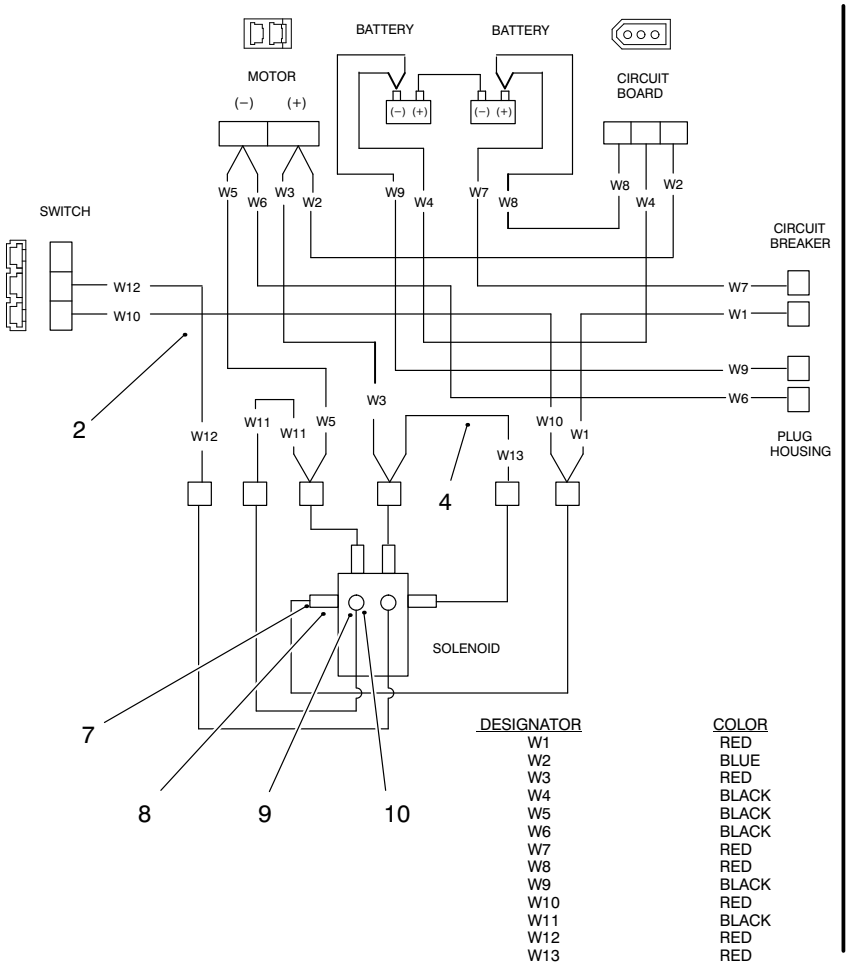

DESIGNATOR	COLOR
W1	RED
W2	BLUE
W3	RED
W4	BLACK
W5	BLACK
W6	BLACK
W7	RED
W8	RED
W9	BLACK
W10	RED
W11	BLACK
W12	RED
W13	RED

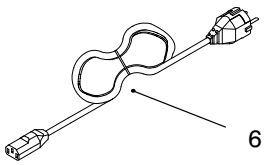

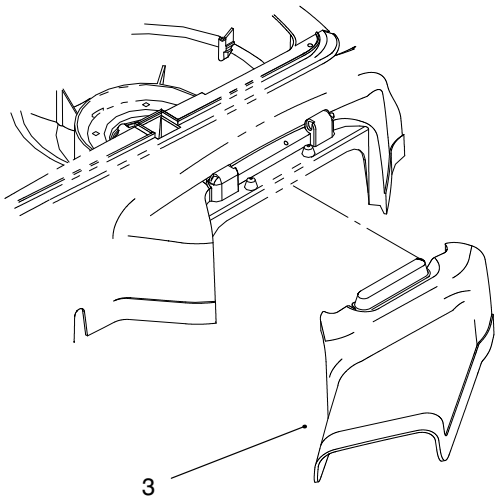

Sheet No.:6

Electrical Wire Diagram, Power Cord and Side Discharge Chute Assembly

Ref. No.	Part No.	Qty.	Description
*	95–5158	1	Decal–Positive
2	95–5048	1	Harness–Wire (Incl. W1–W12)
3	95–5020	1	ASM–Discharge Chute
4	95–3254	1	Harness–Wire (Incl. W13)
*	95–5159	1	Decal–Negative
6	95–5038	1	Cord–Power
7	3220–2	4	Nut
8	3253–4	4	Washer
9	3219–27	2	Nut
10	3253–25	2	Washer

Ref. No.	Part No.	Qty.	Description

* Not Illustrated

Toro Part Number Index

Part No.	Page No.	Ref. No.	Qty.	Description
610358	1	4	4	Nut–Lock
19–4050	4	7	2	Knob
40–1940	1	6	4	Washer
76–2160	1	17	2	Plate–Kicker
92–1008	1	2	2	Knob–Height Adjust
92–1057	1	15	4	Bolt–Shoulder
92–2260	4	2	2	Screw–Handle
92–2269	4	8	1	Screw–Handle
92–2289	3	10	1	Plate–Logo
92–9586	1	7	2	ASM–Wheel
93–0344	1	14	2	ASM–Wheel
93–3340	2	3	1	Fan
93–3341	2	4	1	Bushing
93–3342	2	2	1	Washer
93–3343	1	11	2	Housing–Transformer
93–3345	3	14	1	Clamp–Switch
93–3346	3	17	1	Cover–Lever
93–3952	1	5	2	Axle
93–3953	2	5	1	Blade
93–3956	3	18	1	Mulch Plug–Inside
93–3967	4	13	1	Cam
93–3968	4	15	1	Slide
93–3969	4	10	1	Housing–Bail
93–3970	3	15	1	Switch–Toggle
93–3972	4	6	1	Handle–Lower
93–3975	3	11	1	Bracket–Cable
93–3978	4	4	1	Cable–Control
93–3982	3	5	1	Circuit Breaker
93–3985	1	9	11	Screw–PPH
93–3986	2	13	1	Screw–PPH
93–3986	3	22	4	Screw–PPH
93–3986	4	1	2	Screw–PPH
93–3987	2	10	1	Bolt–Blade
93–3990	3	20	1	Pin–Hinge
93–3999	3	16	1	Spring–Switch
94–1154	4	12	1	Spring–Bail
94–1191	4	14	1	Nut–Push
94–1194	3	12	3	Clamp–Cable
94–1197	2	12	2	Tape–Foam
94–3851	4	11	1	Spring–Slide
94–3865	3	19	1	Spring–Torsion
94–3868	4	16	1	Washer–Flat
94–3870	1	3	1	ASM–Front HOC Lever
94–3871	1	13	1	ASM–Rear HOC Lever
94–4496	2	14	2	Screw
94–4496	3	6	12	Screw
94–4496	4	17	1	Screw
94–6918	2	1	1	ASM–Motor 24 Volt
94–6961	1	18	4	Screw
94–6961	3	13	5	Screw
94–7407	4	18	1	Support–Cable
94–7409	4	20	1	Clip–Cable
94–7417	1	16	1	Trailing Shield
95–1554	1	10	1	Transformer–24v
95–2742	4	3	1	Handle–Upper
95–3000	4	9	1	Bail–Comfort Grip
95–3027	2	18	1	Bracket–Solenoid
95–3254	5	4	1	Harness–Wire (Incl. W13)
95–3255	2	20	1	Solenoid–24 Volt
95–5007	1	20	1	Decal–Recycler
95–5008	3	9	1	Decal–Cover
95–5020	5	3	1	ASM–Discharge Chute

*Not Illustrated

Toro Part Number Index (cont.)

Part No.	Page No.	Ref. No.	Qty.	Description
95−5022	3	24	1	Spring−Torsion
95−5024	3	3	1	ASM−Plug
95−5025	3	23	2	Tab−Shield
95−5026	2	6	1	ASM−Battery Strap
95−5028	3	1	1	Key
95−5030	1	19	1	Cover−Wheel
95−5033	3	21	1	Mulch Plug−Outside
95−5037	1	12	1	Plate−HOC
95−5038	5	6	1	Cord−Power
95−5041	3	25	1	Shield−Rain
95−5042	3	4	1	Housing−Plug
95−5048	5	2	1	Harness−Wire (Incl. W1−W12)
95−5157	4	21	1	Decal−On/Off
95−5158	5	1	1	Decal−Positive
95−5159	5	5	1	Decal−Negative
95−5160	3	2	1	ASM−Panel
95−5163	2	11	1	ASM−Battery
95−5165	1	1	1	ASM−Deck
95−5167	1	8	1	ASM−Liner
95−5168	3	8	1	ASM−Cover
95−5170	3	7	1	ASM−Circuit Coard
95−5180	3	21	1	Spacer − Foam
3219−27	6	9	2	Nut
3220−2	6	7	4	Nut
3234−26	2	19	2	Screw−HHF
3253−4	6	8	4	Washer
3253−25	6	10	2	Washer
3256−2	4	19	1	Washer−Flat
3256−49	2	15	2	Washer−Flat
3290−340	2	9	1	Washer−Spring
3296−8	4	5	1	Nut−Lock
3296−56	2	17	4	Nut−Lock
32144−8	2	7	1	Screw−PPH
32144−44	2	8	2	Screw−HWHTF
32144−110	2	16	2	Screw−HWHTF

*Not Illustrated

PRODUCT CHANGES

In an effort to make improvements available to TORO owners as quickly as possible, minor changes are incorporated into Toro's products from time to time that do not become immediately shown in the Parts Catalog. If such a change has been made in your unit, which is not reflected in your manual, see your TORO Distributor or his Authorized TORO Service Dealer for information and part numbers.

COUNTRIES OTHER THAN THE UNITED STATES OR CANADA

Customers who have purchased TORO products exported from the United States or Canada should contact their Toro Distributor (Dealer) to obtain guarantee policies for your country, province or state. If for any reason you are dissatisfied with your Distributor's service or have difficulty obtaining guarantee information, contact the TORO importer. If all other remedies fail, you may contact us at The Toro Company.

MAINTENANCE RECORD

Date								

MAINTENANCE RECORD

Date								