FORM NO. 3318-649

ROAD LIGHT KIT

for Groundsmaster 3000 Series

PART NUMBER 93-5005

INSTALLATION INSTRUCTIONS

Note: Keep these Instructions with your Groundsmaster Operator's Manual for future reference.

Loose Parts

Note: Use chart below to identify parts used for assembly.

DESCRIPTION	QTY.	USE
Flasher Relay	1	Mount to steering column
R-clamp, 1.25" (32 mm)	1	
Toggle Switch	1	Install toggle switch
Steering Tower Decal	1	
Road Light Kit Harness	1	
Headlight Assembly	2	Install headlights and front shroud
Front Shroud	1	
TORO Decal	1	
M8 x 60 mm Hex Head Bolt	4	
Mounting Pad	4	
Carriage Bolt	2	Install headlights to front of operator's platform
Amber Signal Lamp	2	Install signal lamps to center shroud
1/4" x 1-1/4" Beveled Washer	4	
Wire Assembly	2	Install signal lamps on ROPS (if so equipped)
ROPS Bracket	4	
M12 x 20 mm Hex Head Screw	2	
M12 Hex Nut	2	
Red Reflector	2	Attach to fender and deck
Amber Reflector	1	
1/4"-20 x .62" Hex Head Bolt	6	

DESCRIPTION	QTY.	USE
Taillight Bracket	1	Install taillight and SMV emblem
5/16”-18 x 5/8” Thread-forming Screw	2	
Taillight Assembly	1	
Palnut	2	
R-clamp, .56” (14 mm) I.D. x .75” (19 mm)	1	
SMV Mount Spade	1	
SMV Emblem Socket	1	
M8 x 20 mm Carriage Bolt	2	
SMV Emblem	1	
1/4” Male Spade Terminal	6	Connect road light kit to electrical system
20-amp Fuse	1	
Cable Tie	15	
M6 Hex Nut	3	Various fasteners, packaged in plastic bag
M8 Hex Nut	6	
M6 x 16 mm Hex Head Screw	3	
Parts Catalog	1	Ordering parts
Installation Instructions	1	Read before installing road light kit

Disconnect Battery

1. Remove battery cover.
2. Remove negative battery cable from battery post.

Install Flasher Relay and Wire Harness

1. Remove steering tower housing (Fig. 1).

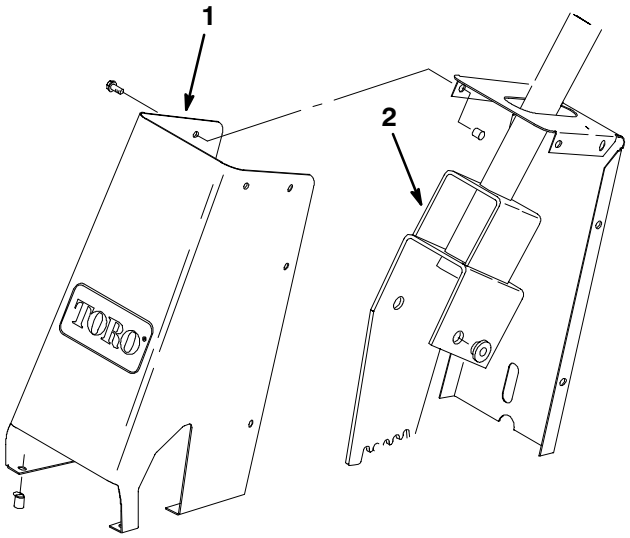

Figure 1

1. Steering Tower Housing
2. Steering Column

2. Locate and drill a 17/64” (6.7 mm) hole in right-hand side of steering column (Figs. 1 and 2).

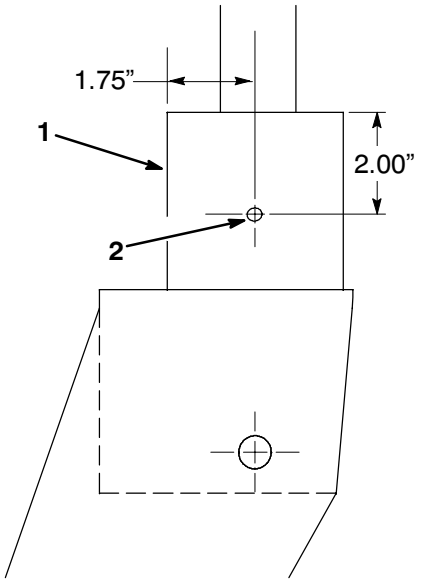

Figure 2

1. Steering Column
2. 17/64” (6.7 mm) Hole

3. Mount flasher relay to steering column with a 1.25” R-clamp, 6 mm x 16 mm hex head bolt and hex nut (Fig. 3).

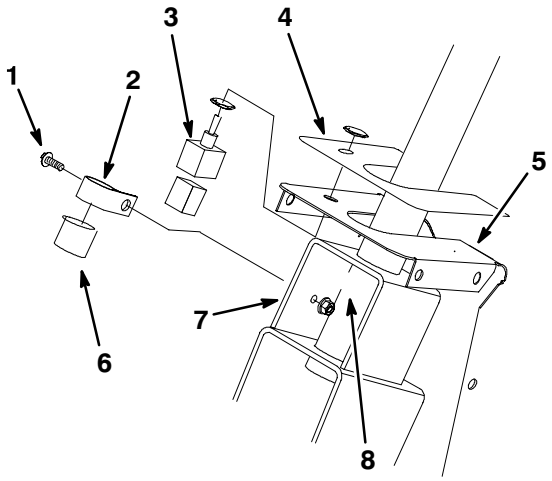

Figure 3

1. 6 mm x 16 mm Hex Head Bolt
2. 1.25” R-clamp
3. Toggle Switch
4. Steering Column Decal
5. Steering Tower Cover
6. Flasher Relay
7. Steering Column
8. 6 mm Hex Nut

4. Using new steering column decal (with backing on) as a template, locate and mark toggle switch hole location on top of steering tower cover (Figs. 3 and 4).

5. Remove decal and drill a 1/2” (13 mm) toggle switch hole (Fig. 4).

6. Install new steering column decal over existing decal on steering tower cover (Figs. 3 and 4).

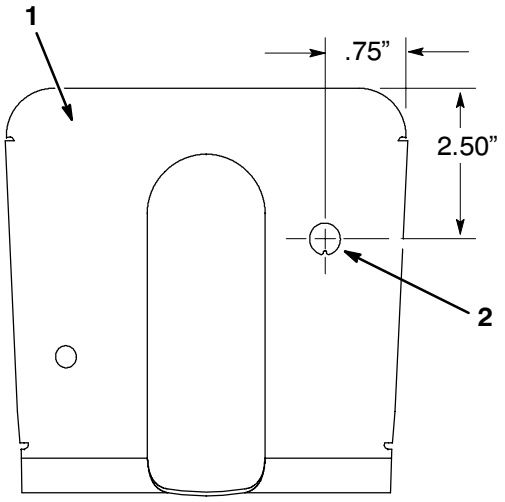

Figure 4

1. Steering Column Decal
2. 1/2” (13 mm) Toggle Switch Hole

7. Mount toggle switch in 1/2” (13 mm) hole in steering tower cover with keyway oriented toward rear of machine (Fig. 4).

8. Remove steering tube cover located to left of steering column (Fig. 5).

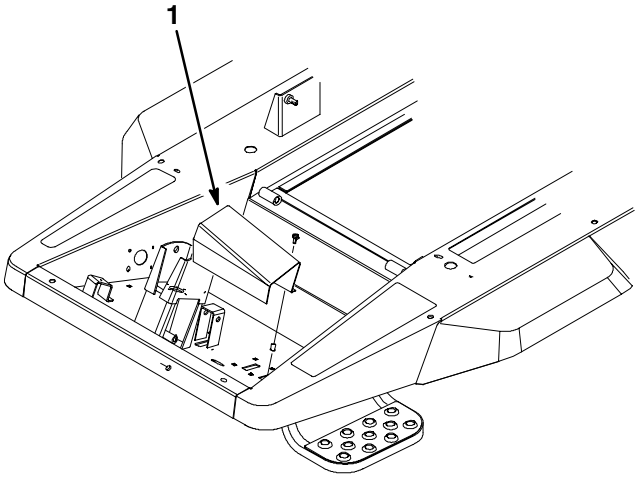

Figure 5

1. Steering Tube Cover

9. Route wire harness (Fig. 6) as follows :

- Along left side of transaxle with tractor wire harness,
- Over top front of tractor frame along hydraulic steering lines,
- Through opening at left front corner of operator platform to steering control valve.

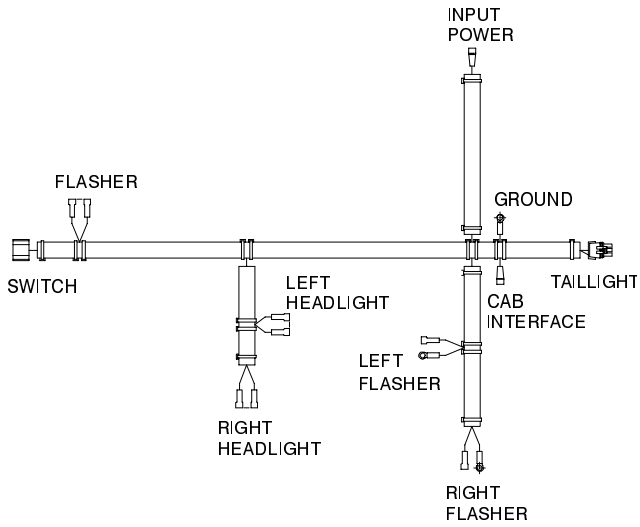

Figure 6

10. Secure wire harness to hydraulic steering lines with cable ties. Make sure harness does not interfere with brake operation.

11. Plug connector body from wire harness into toggle switch on steering tower cover.

12. Connect yellow wire from wire harness to “X” terminal on flasher relay. Connect blue wire from harness to “L” terminal on flasher relay.

13. When routing wires make sure operation of tilt steering does not damage harness or pull on wires.

14. Reinstall steering tower housing (Fig. 7).

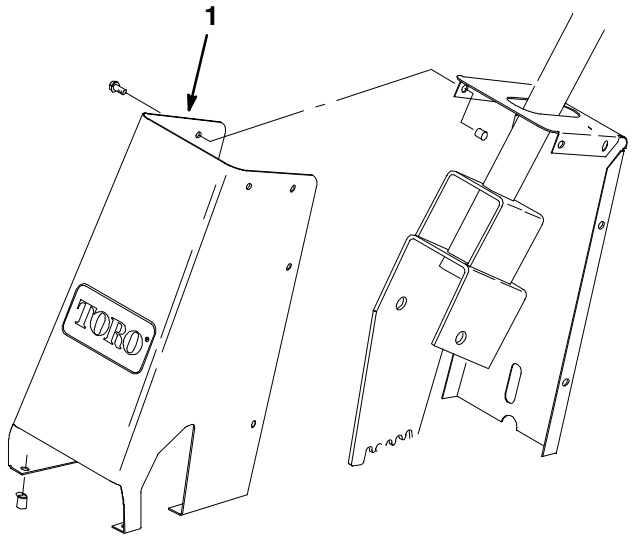

Figure 7

1. Steering Tower Housing

Installing Headlights

Note: The headlights can be mounted either on front edge of operator's platform, or on front shroud provided with kit.

Installing Headlights on Operator's Platform

1. Fasten headlight assemblies to existing holes in front of operator's platform using carriage bolts provided with kit, and hex nuts furnished with headlights.
2. Route headlight wires through carriage bolts and crimp a 1/4" male spade terminal to each wire.
3. Route main wire harness underneath front edge of operator's platform and connect to spade terminals on headlight wires.
4. Secure headlight wiring harness to operator's platform with mounting pads and cable ties.

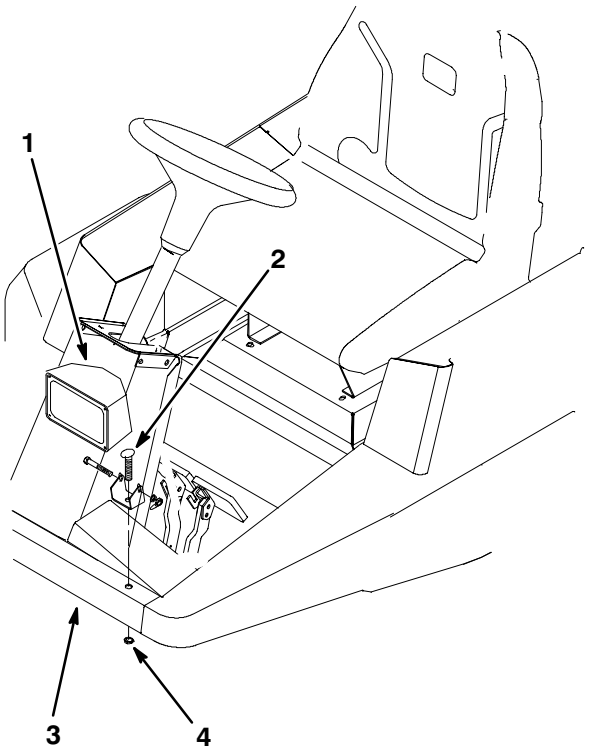

Figure 8

1. Headlight Assembly
2. Carriage Bolt
3. Operator's Platform
4. Hex Nut

Installing Headlights on Front Shroud

1. Cut a .38” (9.7 mm) diameter notch in steering tube covers (Fig. 9).

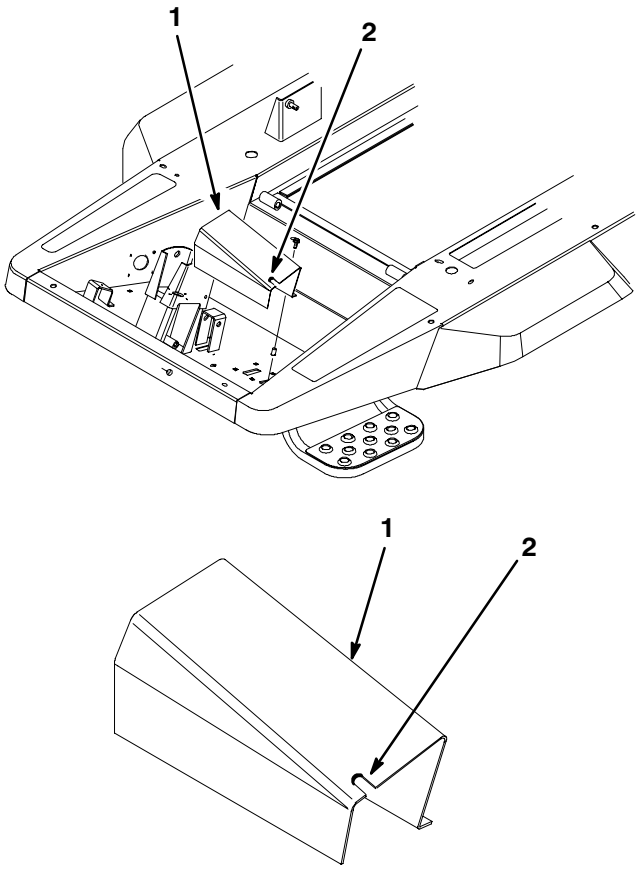

Figure 9

1. Steering Tube Cover (typical)
2. .38” (9.7 mm) Notch

2. Position front shroud (provided with kit) on operator’s platform to locate and mark two additional shroud mounting holes (Fig. 10).

3. Drill two 21/64” (8.3 mm) additional shroud mounting holes in top of operator’s platform (Fig. 10). Use caution when drilling not to damage steering control tubes beneath platform.

4. Fasten front shroud to operator’s platform with four 8 mm x 60 mm (2-3/8”) hex head bolts and hex nuts (Fig. 10).

5. Fasten headlight assemblies to top edge of front shroud using nuts furnished with headlights (Fig. 10).

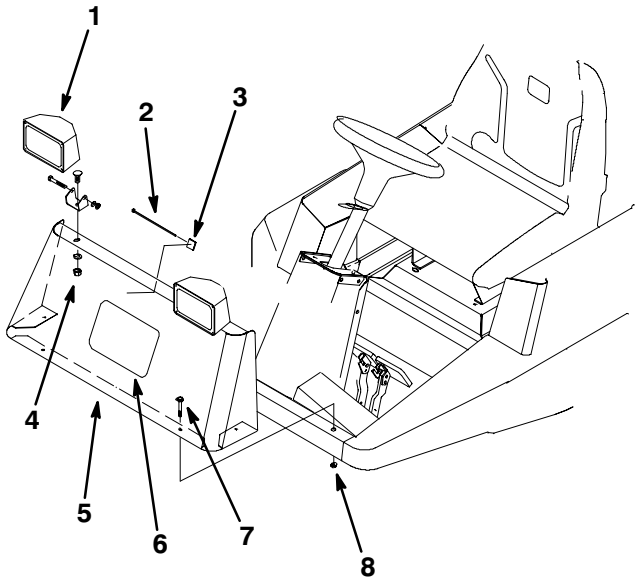

Figure 10

1. Headlight Assembly (2)
2. Cable Tie
3. Mounting Pad
4. Hex Nut (2)
5. Front Shroud (new)
6. TORO Decal
7. M8 x 60 mm Hex Head Bolt (4)
8. 8 mm Hex Nut (4)

6. Crimp 1/4” male spade terminals to headlight wires.

7. Route main harness up along left inside of front shroud, then along top edge of shroud.

8. Connect wires from main wiring harness to the spade terminals on headlight wires.

9. Secure main harness to front shroud with mounting pads and cable ties.

Note: If road light kit is used with a cab, use headlights available from cab manufacturer. Bundle headlight wires and secure them to steering tubes underneath steering tube cover. Connect wire from cab harness to wire from road kit harness near front left corner of engine to provide power for lights.

Installing Signal Lamps

IMPORTANT: Early Groundsmaster® traction units must install an Accessory Wiring Kit (p/n 95-1691) to provide power for road light kit. If your machine does not have an Accessory Wiring Kit, you must purchase and install this kit before you install road light kit. If machine is equipped with a Accessory Wiring Kit, a 20 amp Light Kit Fuse location will be indicated on fuse block decal located on bottom side control panel access panel. (Contact your Authorized TORO Distributor for assistance.)

Installing Signal Lamps on Center Shroud

1. Locate, mark and drill two 33/64” (13 mm) holes in center shroud (Fig. 11).

2. Mount signal lamps loosely using two beveled washers on each lamp, one above and one below surface of shroud. Adjust beveled washers to square signal lamps (Fig. 11).

3. Crimp 1/4” male spade terminals to signal lamp wires and connect to wiring harness.

4. Connect 1/2” ring terminals from wiring harness to signal lamp mounting posts (Fig. 11).

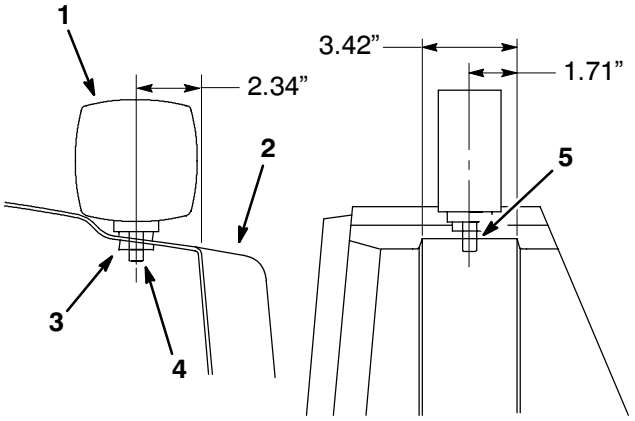

Figure 11

1. Signal Lamp
2. Center Shroud
3. 1/4” x 1-1/4” Beveled Washer (2)
4. Signal Lamp Mounting Post
5. 33/64” (13 mm) Hole

5. Route harness with single lead into instrument control tower and connect to power lead with mating lead, exiting operator convenience center.

Installing Signal Lamps on Roll Over Protection System

1. Install signal lamps on roll over protection system using mounting brackets provided with kit (Fig. 12).
2. Remove 1/2” ring terminals from road kit wire harness and crimp to butt connectors on wire assemblies provided with kit.
3. Connect spade connector from road kit wire harness to spade connector on wire assembly.
4. Route wire assembly along ROPS tube to signal lamp.
5. Secure wire assemblies to roll over protection system with cable ties.

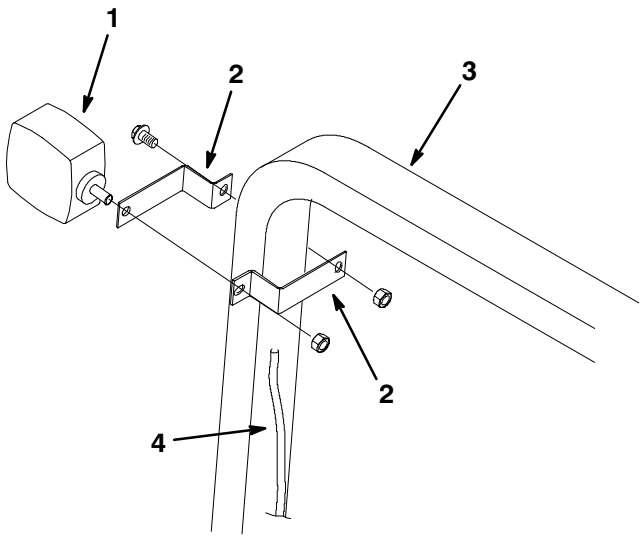

Figure 12

1. Signal Lamp
2. Mounting Bracket
3. Roll Over Protection System
4. Wire Assembly

6. Crimp 1/4” male spade terminals to signal lamp wires and connect to wiring harness.
7. Connect 1/2” ring terminals from wiring harness to signal lamp mounting posts (Fig. 11).
8. Route harness with single lead into instrument control tower and connect to power leads with mating connector exiting operator convenience center.

Installing Taillight

1. Align taillight bracket with existing hole in rear frame member (Fig. 13).
2. Use taillight bracket to locate and mark additional bracket mounting hole in rear frame member (Fig. 13).
3. Drill a 19/64” (7.5 mm) mounting hole in frame member (Fig. 13).
4. Fasten taillight bracket to frame member with two 5/16”-18 x 5/8” thread-forming screws (Fig. 13).
5. Fasten taillight assembly to taillight bracket with two palnuts (Fig. 13).

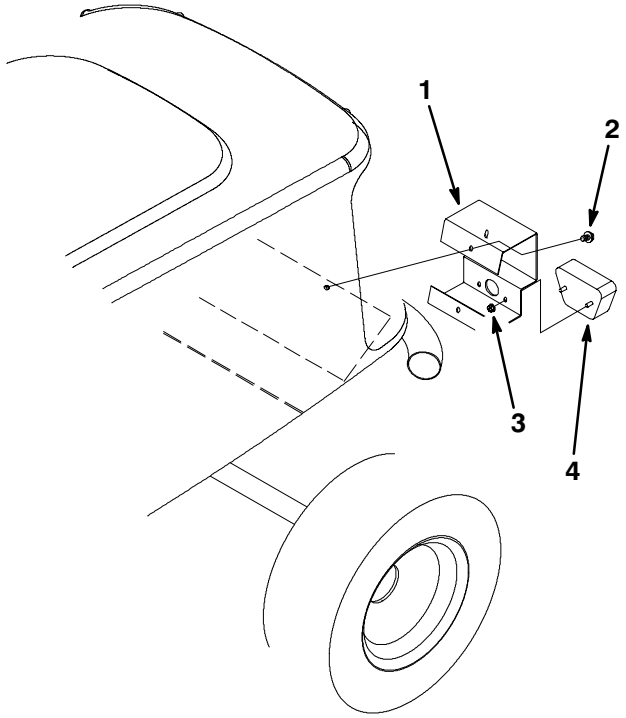

Figure 13

1. Taillight Bracket
2. 5/16”-18 x 5/8” Screw
3. Palnut
4. Taillight

6. Attach wiring harness ground wire to common area on front left side of engine.
7. Route remaining portion of wiring harness along left frame rail and connect it to taillight.

8. Secure conduit to machine using an R-clamp fastened to existing bolt and nut used for radiator support bracket (Fig. 14).

Installing SMV Emblem

1. Install SMV emblem socket to taillight bracket using two 8 mm x 20 mm carriage bolts and flange nuts (Fig. 14).

2. Fasten SMV emblem to SMV mount spade with two 6 mm x 16 mm hex bolts and nuts (Fig. 14).

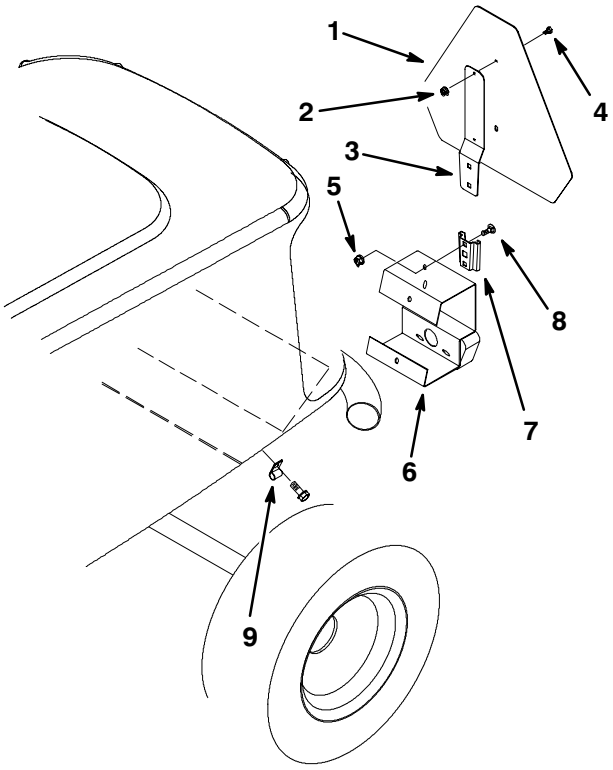

Figure 14

1. SMV Emblem
2. 6 mm Hex Nut
3. SMV Mount Spade
4. 6 mm x 16 mm Hex Bolt
5. 8 mm Flange Nut
6. Taillight Bracket
7. SMV Emblem Socket
8. 8 mm x 20 mm Carriage Bolt
9. R-clamp

Installing Red Fender Reflectors

1. Position the 3” (76 mm) red reflectors on rear of fenders (Fig. 15).

2. Locate, mark and drill two 1/4” (6 mm) reflector mounting holes in each fender (Fig. 15).

3. Fasten red reflectors to fenders using 6 mm x 16 mm hex head bolts and nuts (Fig. 15).

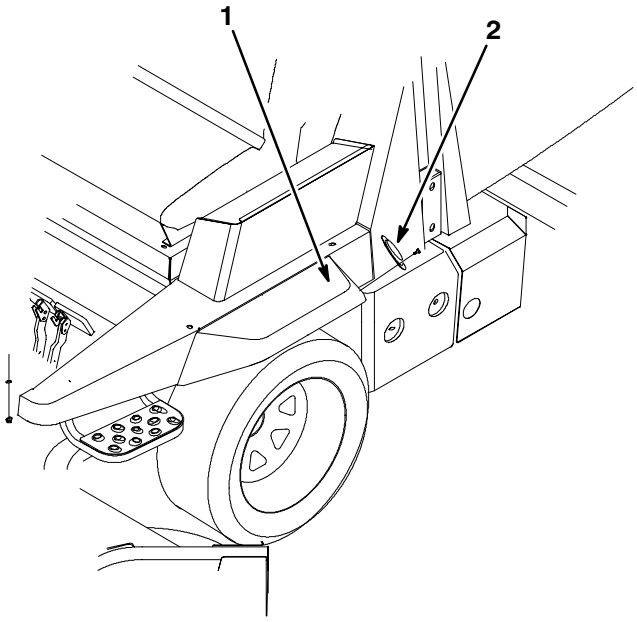

Figure 15

1. Fender
2. 3” (76 mm) Red Reflector

Installing Amber Deck Reflector

1. Position the 3” (76 mm) amber reflector on left front of deck (Fig. 16).
2. Locate, mark and drill two 1/4” (6 mm) reflector mounting holes in deck (Fig. 16).
3. Fasten amber reflector to deck using 6 mm x 16 mm hex head bolts and nuts (Fig. 16).

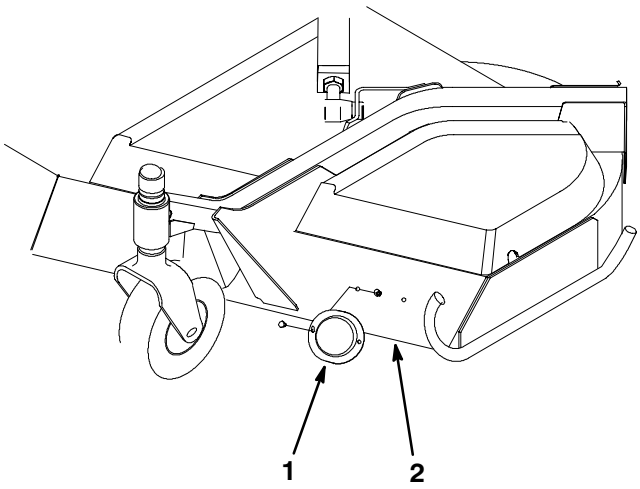

Figure 16

1. 3” (76 mm) Amber Reflector
2. Left Front of Deck

Installing 20-amp Fuse

Open access panel at rear of console and install a 20-amp fuse in fuse cavity location #7. The fuse location should correspond to fuse panel decal (Fig. 17).

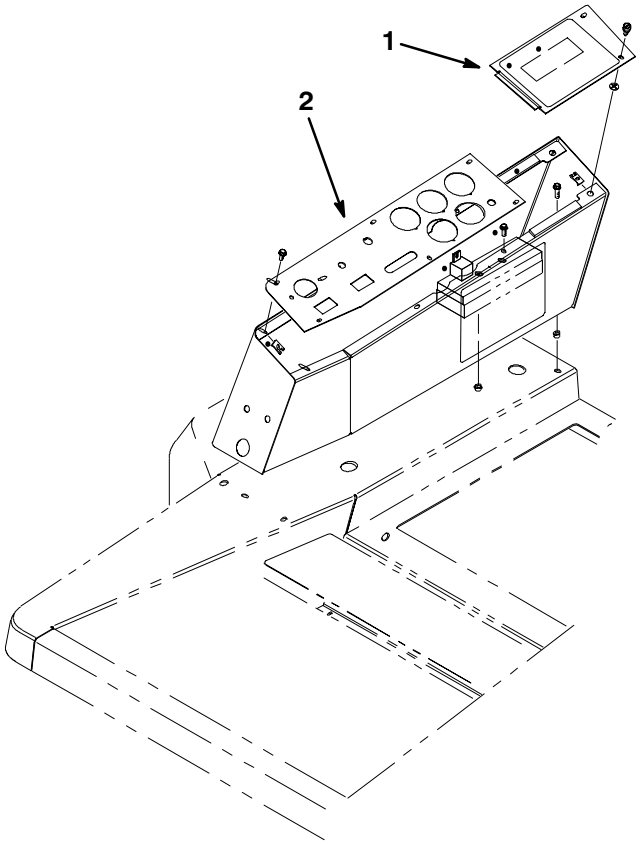

Figure 17

1. Access Panel
2. Console

Connect Battery

1. Reattach negative battery cable to battery post.
2. Reinstall battery cover.

Operating Lights

To activate headlights, taillight and warning flashers, move switch on steering tower to “ON” position.

Note: When using road light kit with a cab, either switch on steering tower or switch on cab control panel will switch on headlights, flashers and taillight. If both switches are turned on, turning just one switch off will not switch off headlights, flashers and taillight.

Aiming Headlights

1. Loosen mounting nuts and position each headlight so it points straight ahead. Tighten mounting nut just enough to hold the headlight in position.
2. Place a flat piece of sheet metal, large enough to fit over the face of the headlight.
3. Mount a magnetic protractor onto the plate. While holding the assembly in place, carefully tilt the headlight downward 3°, then tighten nut.
4. Repeat procedure on other light