FORM NO. 3317–231 REV B

TORO®

MODEL NO. 03702 – 50001 thru 70001 & UP
MODEL NO. 03704 – 50001 thru 70001 & UP

OPERATOR'S MANUAL

REELMASTER® 4500 D
TRACTION UNIT

To understand this product, and for safety and optimum performance, read this manual before starting the engine. Pay special attention to SAFETY INSTRUCTIONS highlighted by this symbol.



It means CAUTION, WARNING or DANGER – personal safety instruction. Failure to comply with the instruction may result in personal injury.

TORO
THIS UNIT CONFORMS TO ANSI / OPEI B71.4–1990

The REELMASTER 4500 D conforms to the American National Standards Institute's safety standards for riding mowers when rear tires are filled with calcium chloride and two rear wheel weight kits (Part No. 11–0440) are installed.



© The TORO COMPANY – 1994, Rev. 1995, 1996

FOREWORD

This operator's manual has instructions on safety, proper set–up and operation, adjustments and maintenance. Therefore, anyone involved with the product, including the operator, should read and understand this manual. Major sections are:

- Safety Instructions
- Specifications
- Before Operating
- Know Your Controls
- Operating Instructions
- Maintenance
- Schematics

This manual emphasizes safety, mechanical and general product information. DANGER, WARNING and CAUTION identify safety messages. Whenever the triangular safety alert symbol appears, understand the safety message that follows. For complete safety instructions, read pages 4 – 5. IMPORTANT highlights special mechanical information and NOTE emphasizes general product information worthy of special attention.

⚠ WARNING: ⚠

Diesel engine exhaust and some of its constituents are known to the State of California to cause cancer, birth defects, or other reproductive harm.

SPARK ARRESTER

Because in some areas there are local, state or federal regulations requiring that a spark arrestor muffler be used on the engine of this mower, a spark arrestor muffler is available as an option. If a spark arrestor muffler is required, order one of the following parts from your local Authorized Toro Distributor.

(1) 74–2900 Spark Arrestor Muffler (Two wheel drive model only)
(1) 92–6074 Spark Arrestor Muffler (Four wheel drive model only)

When the mower is used or operated on any California forest, brush or grass covered land, a properly operating spark arrester must be attached to the muffler. The operator is violating state law, Section 442 Public Resources Code if a spark arrester is not used.

Whenever you have questions or need service, contact your local authorized Toro Distributor. In addition to having a complete line of accessories and professional turf care service technicians, the distributor has a complete line of genuine TORO replacement parts to keep your machine operating properly. Keep your TORO all TORO. Buy genuine TORO parts and accessories.

TABLE OF CONTENTS

SAFETY INSTRUCTIONS 4–5
SAFETY AND INSTRUCTION DECALS 6–8
SPECIFICATIONS 9–10
BEFORE OPERATING 11–12
- Check Engine Oil 11
- Check Cooling System 11
- Fill Fuel Tank 12
- Check Hydraulic System 12
- Check Reel to Bedknife Contact 12
- Check Tire Pressure 12
- Rear Ballast 12

KNOW YOUR CONTROLS 13–16
OPERATING INSTRUCTIONS 17–22
- Starting and Stopping 17
- Priming Fuel System 17
- Checking Warning Indicator Lights 17
- Checking Interlock System 17
- Traction Pedal Response 18
- Pushing or Towing Traction Unit 19
- Operating Characteristics 29
- Cutting Charts 21

LUBRICATION 22
MAINTENANCE 24–30
- General Air Cleaner Maintenance 24
- Precleaner Bowl Service 24
- Air Cleaner Filter Service 24
- Engine Oil and Filter 25
- Fuel System 25
- Engine Cooling System 26
- Alternator Belt 26
- Battery Care 26
- Adjusting Hand Brake & Traction Switches .. 27
- Adding Hydraulic Oil 27
- Draining Water From Hydraulic Reservoir ... 28
- Changing Hydraulic Oil 28
- Replacing Hydraulic Filter 28
- Replacing Hydraulic System Breather 29
- Checking Hydraulic Lines and Hoses 29
- Hydraulic System Test Ports 29
- Rear Wheel Toe–In 30
- Checking Planetary Gear Drive 30
- Cylinder Head Bolts 30
- Engine Valve Clearance 30

ELECTRICAL SCHEMATIC 31
HYDRAULIC SCHEMATIC 32
MAINTENANCE SCHEDULE 33
PRODUCT IDENTIFICATION 34
NOTES 35
THE TORO PROMISE ..... BACK COVER

SAFETY INSTRUCTIONS

Improper use or maintenance by the operator or owner of the machine can result in injury. Reduce the potential for any injury by complying with the following safety instructions.

BEFORE OPERATING

1. Read and understand the contents of the traction unit and cutting unit operator's manuals before operating the machine. To get replacement manuals, send complete model and serial number to:

The Toro Company
8111 Lyndale Avenue South
Minneapolis, MN 55420–1196

2. Never allow children to operate the machine or adults to operate it without proper instruction.

3. Become familiar with the controls and know how to stop the machine and engine quickly.

4. Keep all shields, safety devices and decals in place. If a shield, safety device or decal is defective or damaged, repair or replace it before operating the machine.

5. Always wear substantial shoes. Do not operate machine while wearing sandals, tennis shoes, sneakers or when barefoot. Do not wear loose fitting clothing that could get caught in moving parts and possibly cause personal injury.

6. Wearing safety glasses, safety shoes, long pants and a helmet is advisable and required by some local ordinances and insurance regulations.

7. Make sure the work area is clear of objects which might be picked up and thrown by the reels.

8. Do not carry passengers on the machine. Keep everyone, especially children and pets, away from the areas of operation.

9. Since diesel fuel is highly flammable, handle it carefully:

A. Use an approved fuel container.

B. Do not remove fuel tank cap while engine is hot or running.

C. Do not smoke while handling fuel.

D. Fill fuel tank outdoors and only to within an inch (25 mm) from the top of the tank, not the filler neck. Do not overfill.

E. Wipe up any spilled fuel.

WHILE OPERATING

10. Do not run engine in a confined area without adequate ventilation. Exhaust is hazardous and could be deadly.

11. Sit on the seat when starting and operating the machine.

12. Check interlock switches daily for proper operation. If a switch fails, replace it before operating the machine. The interlock system is for your protection, so do not bypass it. Replace all interlock switches every two years.

13. This product may exceed noise levels of 85 dB(A) at the operator position. Ear protectors are recommended for prolonged exposure to reduce the potential of permanent hearing damage.

14. Before starting the engine each day, test lamps, warning buzzer and signal lights to assure proper operation.

15. Pay attention when using the machine. To prevent loss of control:

A. Mow only in daylight or when there is good artificial light.

B. Watch for holes or other hidden hazards.

C. Be extremely careful when operating close to sand traps, ditches, creeks, steep hillsides or other hazards.

D. Reduce speed when making sharp turns. Avoid sudden stops and starts. Use ground speed limiter lever to set pedal travel so excessive ground speed will be avoided during mowing and transport.

E. Look to the rear to assure no one is behind the machine before backing up.

F. Watch for traffic when near or crossing roads. Always yield the right–of–way.

G. Reduce speed when driving downhill.

16. Keep hands, feet and clothing away from moving parts and the reel.

17. Traverse slopes carefully. Do not start or stop suddenly when traveling uphill or downhill.

18. Operator must be skilled and trained in how to drive on hillsides. Failure to use caution on slopes or hills may cause loss of control and vehicle to tip or roll possibly resulting in personal injury or death.

19. When operating 4 wheel drive machine, always use the seat belt and ROPS together and have seat pivot retaining pin installed.

20. If engine stalls or loses headway and cannot make it to the top of a slope, do not turn machine around. Always back slowly straight down the slope.

21. Raise cutting units and latch them securely in transport position before driving from one work area to another.

22. Do not touch engine, muffler or exhaust pipe while engine is running or soon after it is stopped. These areas could be hot enough to cause burns.

SAFETY INSTRUCTIONS

23. If cutting unit strikes a solid object or vibrates abnormally, stop immediately, turn engine off, set parking brake and wait for all motion to stop. Inspect for damage. If reel or bedknife is damaged, repair or replace it before operating. Do not attempt to free blocked cutting unit by moving Mow/Backlap lever rapidly between FORWARD and BACKLAP. Damage to hydraulic system may result. Lever should easily return and hold in the STOP position.

24. Before getting off the seat:

A. Move traction pedal to neutral.

B. Set parking brake.

C. Disengage cutting units and wait for reels to stop.

D. Stop engine and remove key from switch.

E. Do not park on slopes unless wheels are chocked or blocked.

25. The optional TORO tow bar is for emergency towing only. Use only the special tow bar if it becomes necessary to tow machine. Use trailer for normal transport.

MAINTENANCE

26. Before servicing or making adjustments, stop engine and remove key from the switch.

27. Assure entire machine is properly maintained and in good operating condition. Frequently check all nuts, bolts and screws.

28. Frequently check all hydraulic line connectors and fittings. Assure all hydraulic hoses and lines are in good condition before applying pressure to the system.

29. Keep body and hands away from pin hole leaks or nozzles that eject high pressure hydraulic fluid. Use cardboard or paper to find hydraulic leaks. Hydraulic fluid escaping under pressure can penetrate skin and cause injury. Fluid accidentally injected into the skin must be surgically removed within a few hours by a doctor or gangrene may occur.

30. Before any hydraulic system maintenance, stop engine and lower cutting units to the ground so all pressure is relieved.

31. For major repairs or other assistance, contact your local Toro Distributor.

32. To reduce potential fire hazard, keep engine area free of excessive grease, grass, leaves and dirt. Clean protective screen on back of engine frequently.

33. If engine must be running to perform maintenance or an adjustment, keep hands, feet, clothing and other parts of the body away from cutting units and other moving parts. Keep everyone away.

34. Do not overspeed the engine by changing governor setting. Maximum engine speed is 2500 rpm + or − 100 rpm. To assure safety and accuracy, have an Authorized Toro Distributor check maximum engine speed.

35. Shut engine off before checking or adding oil to the crankcase.

36. Disconnect battery before servicing the machine. If battery voltage is required for troubleshooting or test procedures, temporarily connect the battery.

37. Toro recommends that two people be used to backlap reels. Each person has specific duties and you must communicate with one another.

38. For optimum performance and safety, use genuine Toro replacement parts and accessories. Replacement parts and accessories made by other manufacturers could be dangerous and may void the product warranty of The Toro Company.

SAFETY AND INSTRUCTION DECALS

The following safety and instruction decals are installed on the traction unit. If any become damaged, replace them. Decals are listed in your Parts Catalog. Order replacements from your Authorized TORO Distributor.

⚠ DANGER UNDER NO CIRCUMSTANCES USE A SHORT HANDLED PAINT BRUSH. SEE OPERATOR'S MANUAL FOR COMPLETE INSTRUCTIONS.

⚠ WARNING DURING BACKLAP OPERATION REELS ARE UNDER POWER. CONTACT WITH REELS CAN RESULT IN PERSONAL INJURY.

1. ENGAGE PARKING BRAKE.
2. HAVE ASSISTANT START ENGINE, SET THROTTLE TO MIN. IDLE SPEED SETTING AND WHEN INSTRUCTED BY MECHANIC, ENGAGE REELS IN BACKLAP MODE.
3. USING PAINT BRUSH ATTACHED TO HANDLE PROVIDED, APPLY LAPPING COMPOUND TO REELS.

⚠ CAUTION FAILURE TO COMPLY WITH THE FOLLOWING SAFETY INSTRUCTIONS MAY RESULT IN PERSONAL INJURY.

1. KEEP PEOPLE AND PETS A SAFE DISTANCE AWAY FROM MACHINE.
2. KEEP ALL GUARDS IN PLACE.
3. BEFORE LEAVING OPERATOR'S POSITION:
   A. MOVE TRANSMISSION PEDAL TO NEUTRAL
   B. SET PARKING BRAKE.
   C. DISENGAGE CUTTING UNIT AND ASSURE REELS ARE NO LONGER SPINNING.
   D. SHUT OFF ENGINE.
   E. REMOVE IGNITION KEY.
4. WAIT FOR ALL MOVEMENT TO STOP BEFORE SERVICING MACHINE.
5. STOP ENGINE BEFORE ADDING FUEL OR LIFTING HOOD.
6. CHECK PERFORMANCE OF ALL INTERLOCK SWITCHES DAILY. SEE OPERATOR'S MANUAL FOR INSTRUCTION. DO NOT DEFEAT INTERLOCK SYSTEM. IT IS FOR YOUR PROTECTION.

READ AND UNDERSTAND OPERATOR'S MANUAL BEFORE OPERATING THIS MACHINE.
REPLACEMENT MANUAL AVAILABLE BY SENDING COMPLETE MODEL NUMBER TO:
THE TORO COMPANY, 8111 LYNDALE AVE., MINNEAPOLIS, MINN. 55420. 58-6540

ON PANEL IN FRONT OF OPERATOR'S SEAT
(Part No. 58–6540)

⚠ WARNING

THIS ARM CAN SPRING UPWARD!
SEE OPERATORS MANUAL FOR DISASSEMBLY PROCEDURE.

ON LIFT ARMS
(Part No. 61–3610)

HYDRAULIC OIL LEVEL
FILL TO CENTER OF GLASS OR HIGHER WITH APPROVED HYDRAULIC OIL.
SEE OPERATOR'S MANUAL FOR LIST OF APPROVED OILS. DO NOT USE ENGINE OIL.

ON LEFT SIDE OF MACHINE
(Part No. 59–7290)

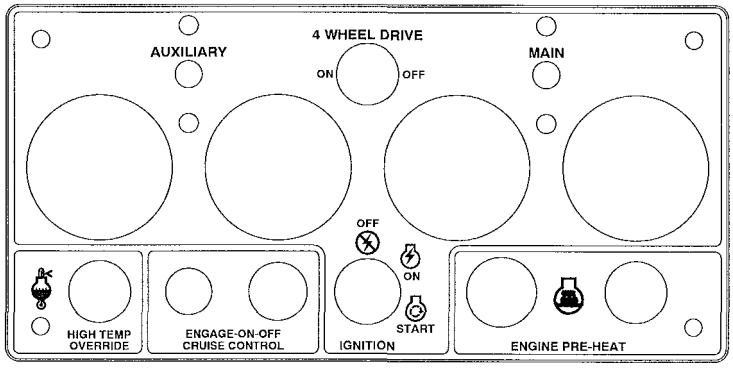

ON RIGHT CONTROL PANEL
(Part No. 92–5656)

IMPORTANT
DO NOT ALLOW LIFT LEVERS TO "SNAP BACK" WHEN LOWERING CUTTING UNITS: UNITS MAY NOT LOWER COMPLETELY.



NEXT TO LIFT LEVERS
(Part No. 62–6290)

SAFETY AND INSTRUCTION DECALS

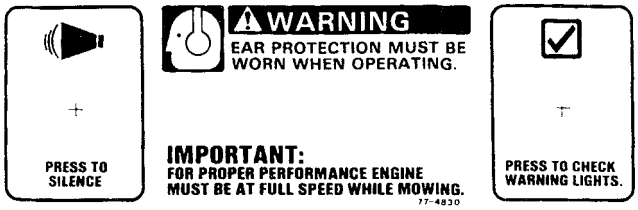

ON STEERING CONSOLE
(Part No. 77–4830)



NEAR RADIATOR FILL CAP
(Part No. 58–6940)



UNDER SEAT NEAR OIL FILL CAP
(Part No. 58–6530)

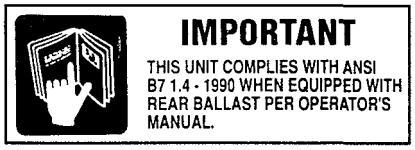

ON FRAME ABOVE RIGHT REAR WHEEL
(Part No. 88–6700)



ON FRAME ABOVE REAR WHEELS
(Part No. 58–5910)



ON FAN SHROUD
(Part No. 76–8750)



NEAR FRONT CUTTING UNIT RELEASE LEVER
(Part No. 59–7960)



NEAR FUEL TANK FILL CAP
(Part No. 49–2280)

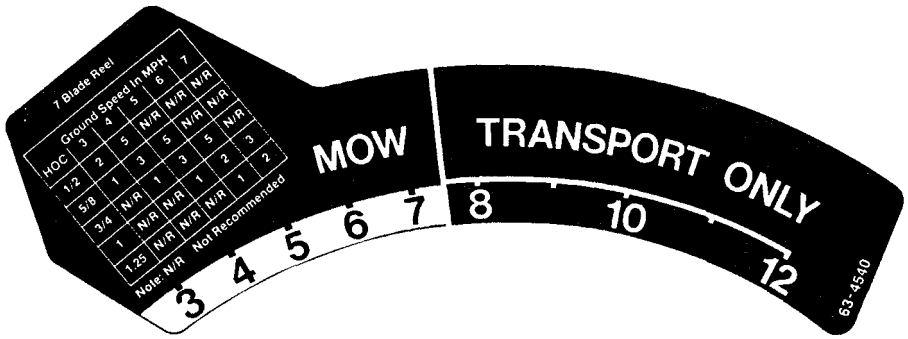

NEXT TO TRACTION PEDAL ON STEERING CONSOLE
(Part No. 63–4540)

SAFETY AND INSTRUCTION DECALS

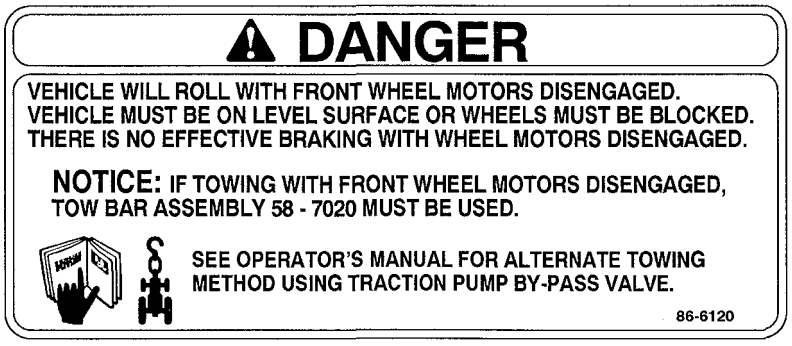

ON FRONT CARRIER & TOW BAR
(Part No. 86–6120)

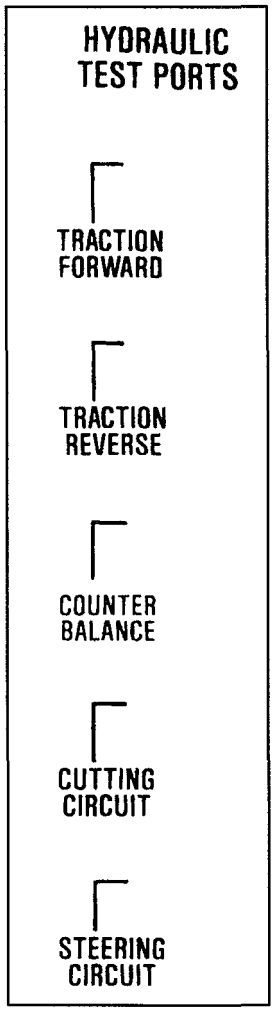

NEAR TEST PORTS
(Part No. 58–6680)

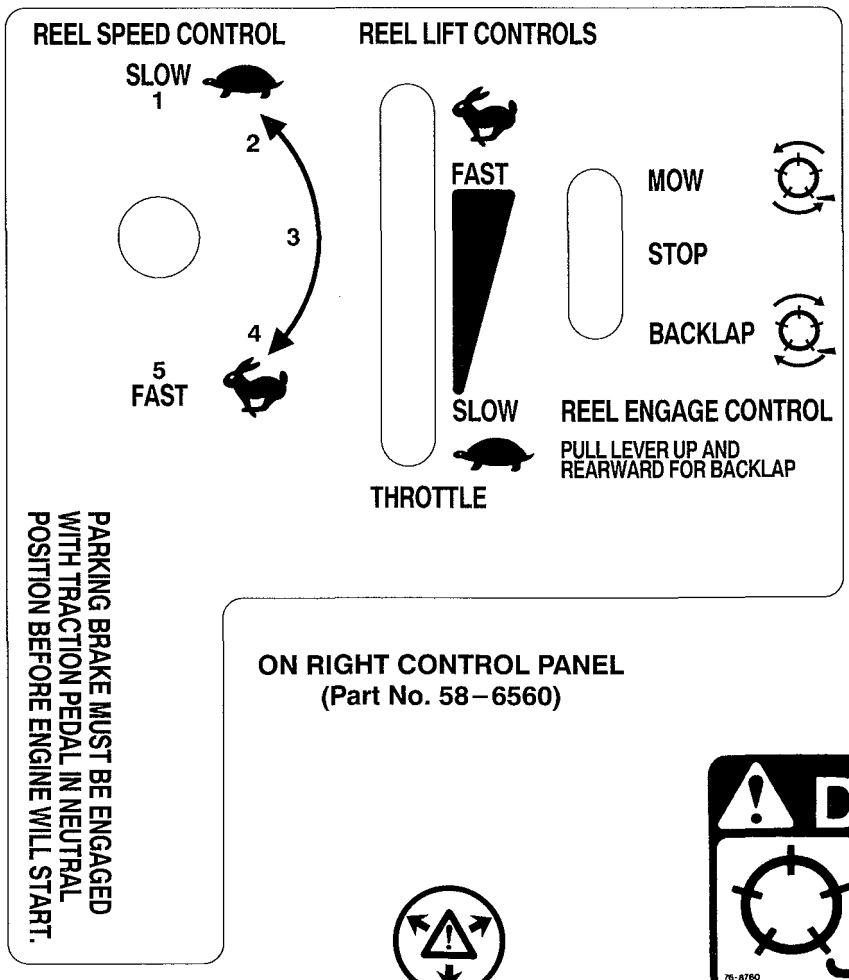

ON RIGHT CONTROL PANEL
(Part No. 58–6560)

ON RADIATOR CAP
(Part No. 59–8440)



ON CUTTING UNIT
(Part No. 76–8760)

SPECIFICATIONS

Engine: Mitsubishi, four–cycle, four cylinder, 139 cu–in. displacement, water cooled diesel engine. Rated 40 hp @ 2300 rpm, 21:1 compression ratio. Low idle – 1200 rpm, high idle – 2500 rpm. Injection Timing – 18° BTDC. Oil capacity is 6.9 qt (6.5 L) with filter.

Cooling System: Capacity is 3.7 gal. (14 L) of 50/50 mixture of ethylene glycol anti–freeze.

Fuel System: Capacity is 15 gal. (56.8 L) of #2 diesel fuel.

Hydraulic System: Reservoir capacity is 9.3 gal. (35.2 L) and total system capacity is 18.2 gal. (69 L). Replaceable breather element. Replaceable spin–on filter element.

Traction System: Ground speed is 0–12.5 mph (0–20 km/h).

Cutting Unit Drive System: Adjustable reel speed to match clip to ground speed. Backlap reel speed is 385 rpm.

Seat: Adjusts 6 in. (15.2 cm) forward and backward. Adjustable backrest and three–positions for operator weight. Integral seat switch at rear of bottom seat cushion.

Diagnostic System: Test ports for: traction system, cutting unit drive system, lift/counterbalance, lift/relief, steering circuits and charge pressure.

Steering System: Automotive type, full power.

Brakes: Hand brake automatically locks traction linkage in neutral. With traction motor wheel locks engaged, twin disc brakes provide positive, emergency braking.

Electrical System: 12 volt, 66 amp hour (DIN) battery and 35 amp alternator. Negative ground.

Interlock System: Designed to stop engine if operator gets off seat while cutting unit drive lever is either in forward or reverse. Prevents engine from starting unless parking brake is engaged, traction pedal is in neutral and cutting units are disengaged. Low hydraulic oil level and high engine temperature protection systems stop engine from running.

Warning Systems:

- Water in fuel
- Hydraulic oil filter
- Engine coolant temperature
- Engine oil pressure
- Voltage Indicator
- Air Cleaner Clogged
- Hydraulic oil temperature
- Hydraulic oil level

General Specifications (approx.):

Width–of–Cut :	
5 Cutting Units	137 in. (348 cm)
4 Cutting Units	110 in. (279 cm)
3 Cutting Units	83 in. (211 cm)
1 Cutting Unit	29 1/2 in. (75 cm)
Overall Width:	
Cutting Units Raised	91 1/2 in. (232 cm)
Cutting Units Down	147 in. (373 cm)
Overall Length:	110 in. (282 cm)
Height:	55 1/2 in. (141 cm)
Height w/ROPS:	82 in. (208 cm)
Ground Clearance:	approx. 7 in. (17.8 cm)
Recommended Height–of–Cut:	
5 Blade Cutting Unit:	1 – 3 in. (25 – 76 mm)
7 Blade Cutting Unit:	3/8 – 1 3/4 in. (9.5 – 45 mm)
11 Blade Cutting Unit:	3/8 – 3/4 in. (9.5 – 19 mm)
Wheel Tread:	53 in. (135 cm)
Wheel Base:	57 in. (145 cm)
Operating Circle:	60 in. (152 cm)
Dry Weight:	4360 lbs. (1717 kg)
Reel Speed:	800 – 1200 rpm
Clip (variable to match conditions):	
5 Blade Cutting Unit:	.176 in. per mph (.352 in. at 2 mph – 1.32 in. at 7.5 mph)
7 Blade Cutting Unit:	.126 in. per mph (.252 in. at 2 mph – .945 in. at 7.5 mph)
11 Blade Cutting Unit:	.080 in. per mph (.16 in. at 2 mph – .600 in. at 7.5 mph)
Fluids:	
Engine Oil:	SAE 10W30 SF, CD
Diesel Fuel:	#2
Cooling System:	50/50 Water & Anti–Freeze

Hydraulic Oils (Interchangeable):
Mobil DTE 26/Shell Tellus 68 Equivalent*

*Equivalent Hydraulic Oils (Interchangeable)

Amoco	Rykon Oil #68
Conoco	Super Hydraulic Oil 68
Exxon	Nuto H 68
Kendall	Kenoil R & 0 AW 68
Pennzoil	Penreco 68
Phillips	Magnus A 68
Standard	Energol HLP 68
Sun	Sunvis 831 WR
Union	Unax AW 68

SPECIFICATIONS

OPTIONAL EQUIPMENT

5 Blade L. H. Cutting Unit, Model No. 03752
(2 per machine)

5 Blade R. H. Cutting Unit, Model No. 03753
(3 per machine)

7 Blade L. H. Cutting Unit, Model No. 03754
(2 per machine)

7 Blade R. H. Cutting Unit, Model No. 03756
(3 per machine)

11 Blade L. H. Cutting Unit, Model No. 03741
(2 per machine)

11 Blade R. H. Cutting Unit, Model No. 03751
(3 per machine)

L. H. Dethatcher Kit, Model No. 03730
(2 per machine)

R. H. Dethatcher Kit, Model No. 03732
(3 per machine)

Cutting Unit Fixed Head Kit, Model 03762
(1 per machine)

Cutting Unit Floatation Kit, Model No. 03760
(1 per machine)

Front Roller Kit, Model No. 03742 (
1 per machine)

Wiehle Roller Kit, Model No. 03740
(1 per machine)

Rear Roller Scraper Kit, Part No. 59–6090
(1 per cutting unit)

Front Roller Scraper Kit, Part No. 62–6220
(1 per cutting unit)

Side Skid Kit, Model No. 03744
(1 per machine)

Spark Arrester Muffler Kit, Part No. 74–2900
(2 wheel drive only)

Spark Arrester Muffler Kit, Part No. 92–6074
(4 wheel drive only)

Cruise Control Kit, Model No. 03770

R.O.P.S. Kit, Part No. 92–9286
(Standard on 4 wheel drive machines)

BEFORE OPERATING

CAUTION

Before servicing or making adjustments to the machine, stop engine and remove key from the switch.

CHECK ENGINE OIL

1. Park machine on a level surface. Release engine cover latches (Fig. 1).

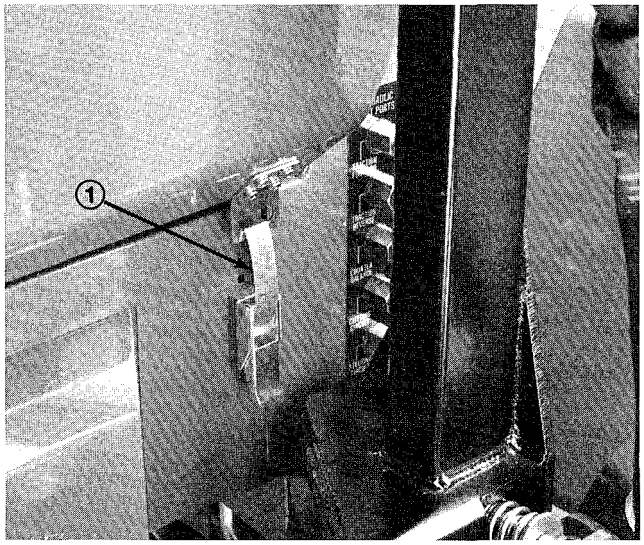

Figure 1
1. Engine Cover Latch

2. Open engine cover.

3. Remove dipstick, wipe clean and reinstall dipstick into tube and pull it out again: Oil level should be up to FULL mark (Fig. 2).

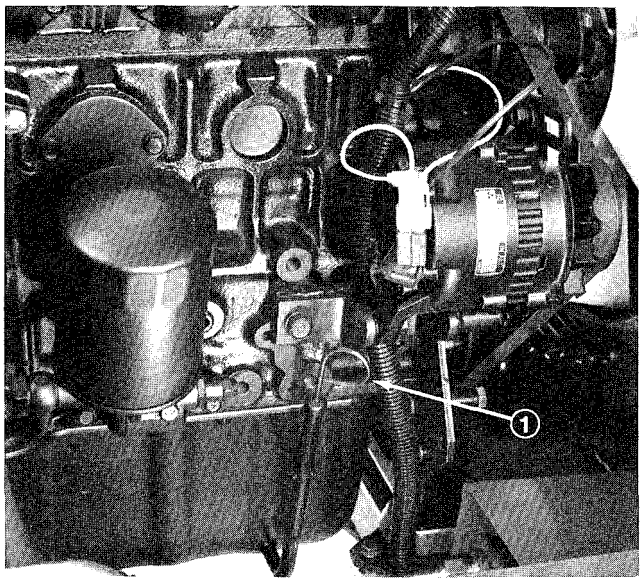

Figure 2
1. Dipstick

4. If oil is below FULL mark, remove fill cap (Fig. 3) and add SAE 10W–30 oil until level reaches FULL mark. DO NOT OVERFILL. Crankcase capacity is 6.9 qt. (6.5 L) with filter.

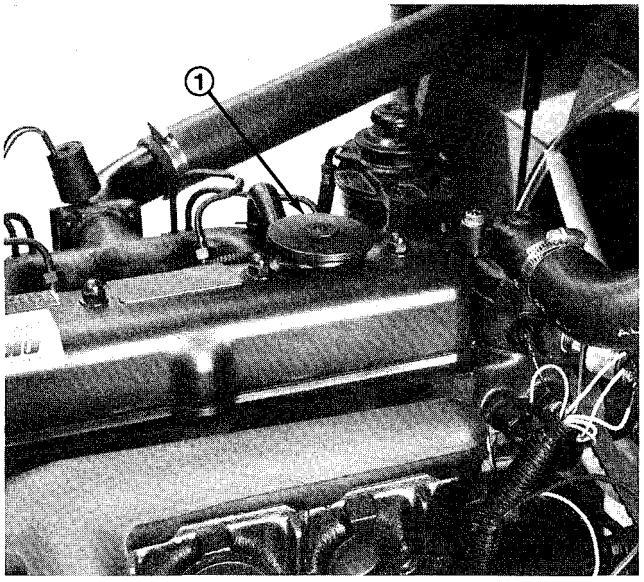

Figure 3
1. Oil Fill Cap

5. Install oil fill cap and dipstick.

6. Close engine cover and secure with the latches.

CHECK COOLING SYSTEM

Capacity of system is 3.7 gal. (14 L).

1. Remove radiator cap (Fig. 4). Coolant should be one inch from bottom of fill hole.

2. If coolant is low, add a 50/50 mixture of water and ethylene glycol anti–freeze. **DO NOT USE WATER ONLY OR ALCOHOL / METHANOL BASE COOLANTS.**

3. Install radiator cap.

CAUTION

The best time to check coolant level is before the engine is started each day because it is not pressurized. When the engine is hot, pressurized coolant can escape and cause burns when the radiator cap is removed. Remove radiator cap slowly and carefully if engine coolant is hot.

BEFORE OPERATING

FILL FUEL TANK

1. Remove fuel tank cap (Fig. 4).

2. Fill tank to about one inch (25 mm) below bottom of filler neck with No. 2 diesel fuel. Then install cap.



Figure 4
1. Radiator Cap
2. Fuel Tank Cap

DANGER

Because diesel fuel is flammable, use caution when storing or handling it. Do not smoke while filling the fuel tank. Do not fill fuel tank while engine is running, hot, or when machine is in an enclosed area. Always fill fuel tank outside and wipe up any spilled diesel fuel before starting the engine. Store fuel in a clean, safety-approved container and keep cap in place. Use diesel fuel for the engine only; not for any other purpose.

CHECK HYDRAULIC SYSTEM

1. Look into sight glass (Fig. 5). Oil level should be even with arrows when checking warm oil. Oil will be 1/4 to 1/2 inch below arrows when cold.

2. If oil level is low, add hydraulic oil to the reservoir. Refer to Hydraulic Oil Specifications.



Figure 5
1. Sight Glass Arrows

CHECK REEL TO BEDKNIFE CONTACT

Each day before operating, check reel to bedknife contact, regardless if quality of cut had previously been acceptable. There must be light contact across the full length of the reel and bedknife (refer to Adjusting Cutting Units in Cutting Unit Manual, Step #1 – Reel to Bedknife Adjustment).

CHECK TIRE PRESSURE

For normal mowing conditions and a wide variety of turf grasses, use these tire pressures: 13 psi front and 15 psi rear. However, when turf is either wetter or drier than normal, tire pressure may need to be changed. On hard turf, use high tire pressure (18 psi front and rear). When turf is soft, use low pressure (9 psi front and 12 psi rear).

IMPORTANT: Maintain even pressure in two front tires (ie. 13 psi) and both rear tires (ie 15 psi) to assure excellent quality-of-cut. Do not exceed 10 mph transport speed (for extended periods) when tire pressure is 12 psi or less because tires may be damaged. Maximum transport speed can be used when front tire pressure is 13 psi or more.

REAR BALLAST

This unit complies with the ANSI B71.4-1990 Standard when rear tires are filled with calcium chloride and 2 rear wheel weight kits (Part no.11-0440) are installed.

IMPORTANT: If a puncture occurs in a tire with calcium chloride, remove unit from turf area as quickly as possible. To prevent possible damage to turf, immediately soak affected area with water.

KNOW YOUR CONTROLS

Seat Adjusting Lever (Fig. 6) –Seat adjusting lever allows 5.9 inch (15 cm) fore and aft adjustment in 19/32 inch (15 mm) increments.

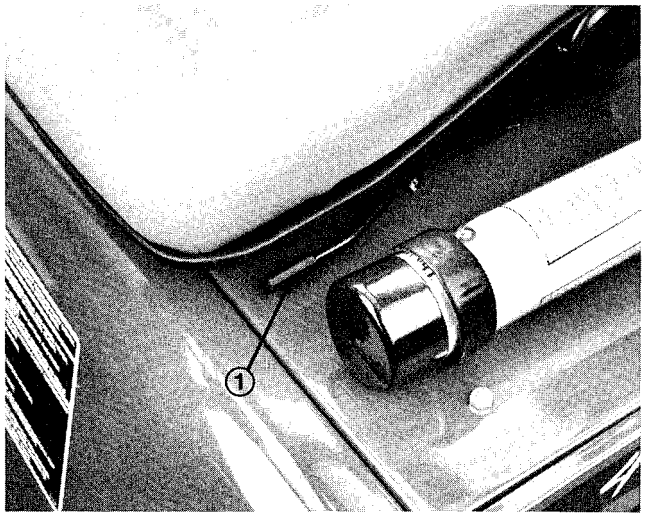

Figure 6
1. Seat Adjusting Lever

Arm Rest (Fig. 7) – Pivot arm rest up and down for operator comfort.

Backrest Knob (Fig. 7) – Backrest knob adjusts backrest angle from 5–20 degrees.

Suspension Lever (Fig. 7) – Suspension lever adjusts seat to the operator's weight. Use up position for light weight operators, center position for medium weight operators and down for heavier weight operators.

Note: Backrest and bottom seat cushions are removable.

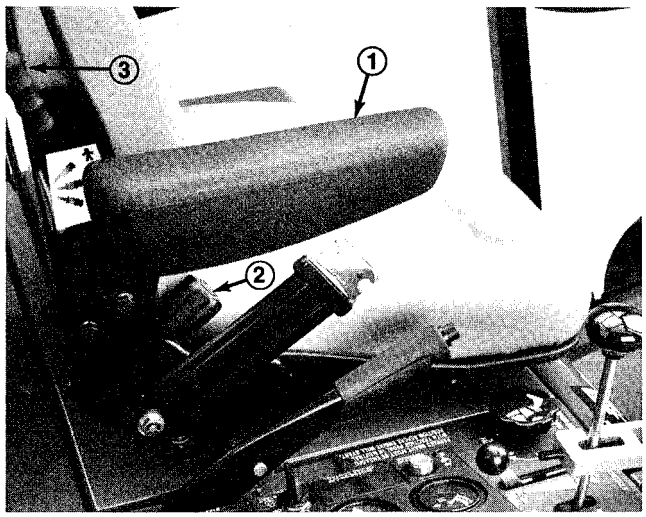

Figure 7
1. Arm Rest
2. Backrest Knob
3. Suspension Lever

CAUTION

TO ASSURE INTERLOCK SWITCH OPERATES PROPERLY, SEAT SUSPENSION MUST BE SET FOR THE WEIGHT OF EACH OPERATOR. IF SUSPENSION IS NOT SET CORRECTLY, THE ENGINE WILL RUN INTERMITTENTLY AND TEND TO STALL. TO CORRECT THIS, SET SUSPENSION LIGHTER.

Warning Light Test Button (Fig. 8) – Before operating, press test button. All lights on the steering tower should illuminate. Any light that does not come on indicates an electrical malfunction that should be repaired immediately. Oil pressure and no charge indicator lights illuminate when turning key switch "ON".

Hydraulic and Engine Indicator Lights (Fig. 8) – If these lights come on, stop machine and make repairs immediately.

Engine Oil Pressure Warning (Fig. 8) – Dangerously low engine oil pressure is indicated by both a warning indicator light and audible signal. When this occurs, stop the engine immediately and correct problem.

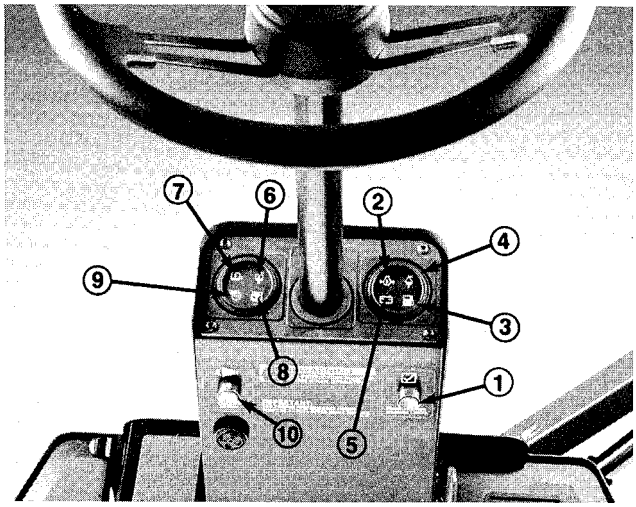

Figure 8
1. Warning Light Check Switch
2. Engine Oil Pressure Warning
3. Fuel System Warning
4. Coolant Temperature Warning
5. No Charge Warning
6. Hydraulic Oil Temperature Warning
7. Hydraulic Oil Level Warning
8. Hydraulic Oil Filter Warning
9. Air Cleaner Warning
10. Alarm Silence Button

Fuel System Warning (Fig. 8) – A warning indicator light and audible signal warn of excess water in fuel system.

KNOW YOUR CONTROLS

Coolant Temperature Warning (Fig. 8) –If engine coolant temperature exceeds 221° F (105° C) a warning indicator light illuminates and audible signal sounds. The engine shuts down if temperature of coolant exceeds 230° F (110° C). Switch resets automatically when system and engine cools down.

No Charge Warning (Fig. 8)– No charge to the batteries is indicated by a warning indicator light and audible signal.

Hydraulic Oil Temperature Warning (Fig. 8) – A warning indicator light and audible signal warn of excessively high hydraulic temperature.

Hydraulic Oil Level Warning (Fig. 8) – A warning indicator light and audible signal warn of low hydraulic oil level. If oil level drops further, the engine will automatically be stopped. Engine cannot be restarted until oil supply is brought to a safe level.

Hydraulic Oil Filter Warning (Fig. 8) – A warning indicator light and audible signal warn of clogged hydraulic filter.

Air Cleaner Warning (Fig. 8) –A warning indicator light and audible signal warn the filter is clogged and in need of service.

Alarm Silence Button (Fig. 8) –Pressing button silences alarm. Alarm system will disengage and automatically reset when problem is corrected or the alarm silence button is pressed.

Horn – In center of steering wheel. Operates only when key switch is in ON.

Traction Pedal (Fig. 9) – Controls forward and reverse operation. Depress top of pedal to move forward and bottom to move backward. Ground speed depends on how far pedal is depressed. For no load, maximum ground speed, fully depress pedal while throttle is in FAST. For maximum power under load or when going uphill, keep engine rpm high by having throttle in FAST and traction pedal held stationary against ground speed limiter. If engine rpm begins to decrease due to load, gradually reduce traction pedal pressure until engine speed is increased.

To stop, reduce foot pressure on traction pedal and allow it to return to center position. On extreme downhill slopes, apply pressure to REVERSE side of pedal, or operate with heel on REVERSE and toe on FORWARD portion of pedal.

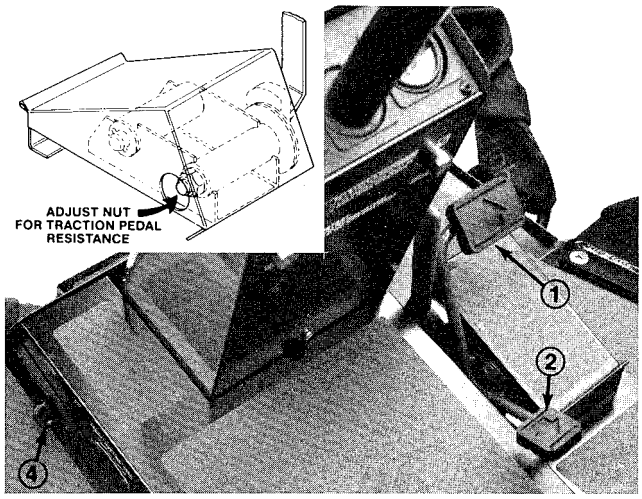

Figure 9

1. Top of Traction Pedal – Forward
2. Bottom of Traction Pedal – Reverse
3. Speed Limiter
4. Transport Latch – Front Cutting Units

Ground Speed Limiter (Fig. 9) – Controls traction pedal movement. Limiter lever helps control the rate of clip and eliminates sudden speed variations over rough terrain.

IMPORTANT: Cam lever nut (Fig. 9 Inset) can be tightened if limiter stop will not hold traction pedal in desired position.

Transport Latches (Fig. 9 and 10) – Latches secure cutting units in upright position for transport operation. Latch for front cutting units is foot–operated (Fig. 9). Hand–operated latches control the center and outside cutting units (Fig. 10).

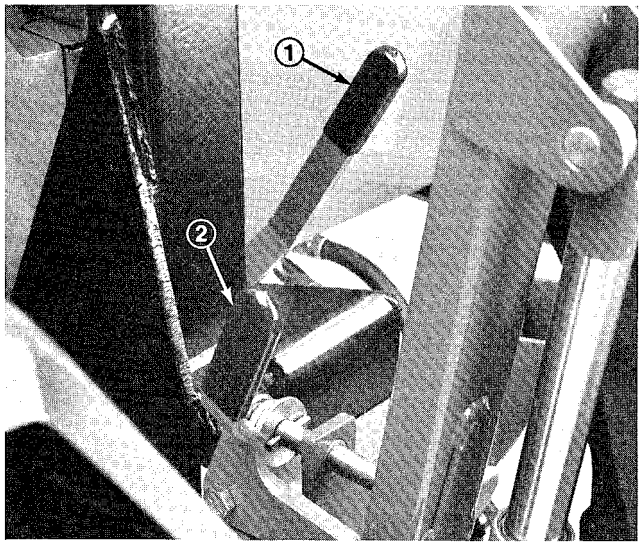

Figure 10

1. Center Cutting Unit Latch
2. Outside Cutting Unit Latch

KNOW YOUR CONTROLS

Cutting Unit Lift Controls (Fig. 11) – The two outside levers raise and lower the two outside cutting units. The center lever raises and lowers the two front and the center cutting units. Engine must be running to lower cutting units. When cutting units are lifted, reels automatically stop. Do not allow levers to snap–back to neutral, or cutting units may not float freely.

Speedometer (Fig. 11) – Indicates ground speed of machine. Use in conjunction with the ground speed limiter and reel speed control to achieve appropriate rate of clip.

Cross Cut Link (Fig. 11) – Used in conjunction with center cutting unit lift lever and Mow/Backlap lever when cross cutting turf.

Coolant Temperature Gauge (Fig. 11) – Indicates temperature of system coolant.

Engine Override Button (Fig. 11) – When button is depressed, engine can be operated after it has over heated and automatically been stopped by the electrical safety system. Use only for short intervals.

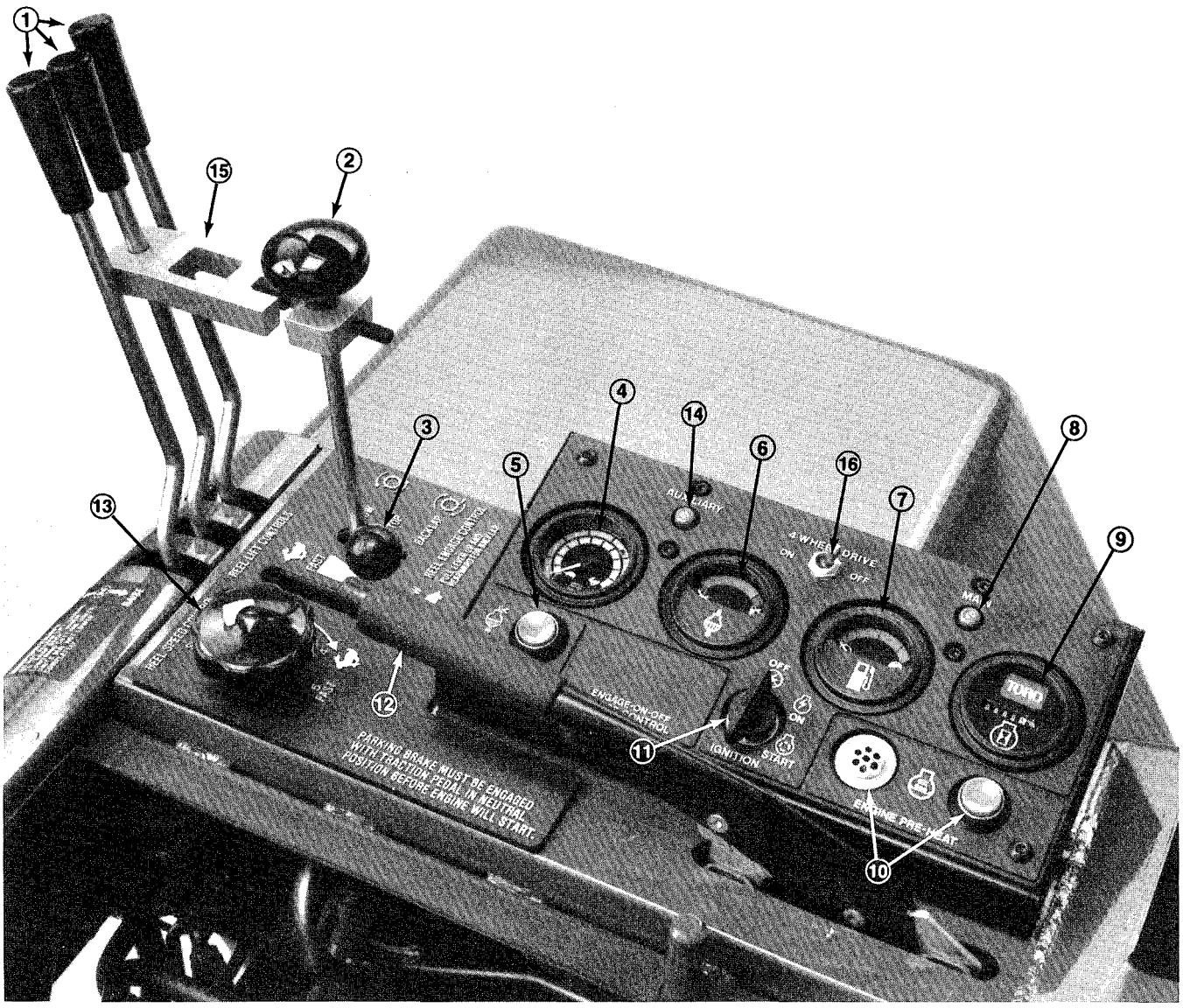

Figure 11

1. Cutting Unit Lift Controls
2. Mow/Backlap Lever
3. Throttle
4. Speedometer
5. Engine Overide Button
6. Coolant Temperature Gauge
7. Fuel Gauge
8. Main Circuit Breaker
9. Hourmeter
10. Engine Preheat Button & Indicator
11. Key Switch
12. Hand Brake
13. Reel Speed Control
14. Auxillary Circuit Breaker
15. Cross Cut Link
16. 4 Wheel Drive Switch (4 Wheel Drive Only)

KNOW YOUR CONTROLS

Fuel Level Gauge (Fig. 11) – Indicates amount of fuel in tank.

Circuit Breakers (Fig. 11) – The main circuit breaker (40 amp) protects the main engine electrical circuits and options, such as headlights. The auxiliary breaker (10 amp) protects wiring for the indicator lights, switches and so forth. Push button to reset breakers.

Hour Meter (Fig. 11) – Indicates total hours that machine has been operated.

Note: Lines circling in the small window at left side of gauge indicate hour meter is operating.

Engine Preheat Indicator (Fig. 11) – Burns brightly when glow plugs are heated sufficiently.

Engine Preheat Switch (Fig. 11) – For cold starts, push and hold switch until indicator glows brightly.

Key Switch (Fig. 11) – Three positions: OFF, ON and START. Rotate key to START and release key when engine begins running. To stop engine, rotate key to OFF.

Parking Brake Lever (Fig. 11) – Pull lever up to lock brake. To release brake, pull up on lever, press button and lower lever. Brake must be engaged to start engine. Always engage parking brake before getting off seat.

Mow–Backlap Lever (Fig. 11) – Move lever forward to engage cutting units. Move lever to the center to stop the cutting units. To backlap cutting units, lift lever over stop and hold in the rear position.

CAUTION: Do not move lever directly between MOW and BACKLAP positions. Pause briefly in STOP position.

Reel Speed Control (Fig. 11) – Rotate knob clockwise to increase reel speed, counter–clockwise to decrease speed. Use in conjunction with the ground speed limiter to achieve appropriate rate of clip.

Throttle Control (Fig. 11) – Move control forward to increase engine speed, backward to decrease speed.

4 Wheel Drive Switch (Fig. 11) – (4 wheel drive model only) Move switch forward to engage 4 wheel drive. Move switch to rear position to disengage 4 wheel drive.

OPERATING INSTRUCTIONS

CAUTION

Before servicing or making adjustments to the machine, stop engine and remove key from the switch.

STARTING AND STOPPING

1. Sit on the seat, keep foot off traction pedal. Assure parking brake is engaged (Fig. 11). Traction pedal and mow/backlap lever must be in neutral.

2. If engine or air temperature is below 45° – 50° F (7° – 10° C), press and hold engine preheat switch in until indicator burns brightly (Fig. 11). Then release switch and proceed to step 3 to start engine.

3. Move throttle to SLOW and turn ignition key to START (Fig. 11). Release key when engine starts.

4. To stop, disengage and move all controls to neutral and set parking brake. Raise and latch all cutting units in transport position. Turn key to OFF and remove it from switch.

PRIMING FUEL SYSTEM

IMPORTANT: The fuel system must be primed when a new engine is started for the first time, if it runs out of fuel or if maintenance is performed on the fuel system.

1. Raise engine cover.

2. Loosen fuel filter bleed plug one turn (Fig. 12). Push priming plunger (Fig. 12)) until a steady stream of fuel runs out of hole in plug. When fuel stops foaming, tighten plug during the downstroke of the priming plunger. Wipe up any spilled fuel.

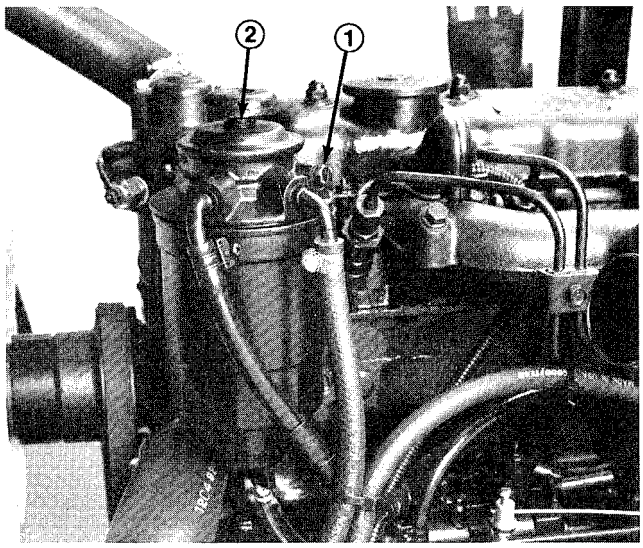

Figure 12

1. Bleed Plug
2. Priming Plunger

Note: It may be necessary to bleed the air out of the fuel line between the fuel filter and the injection pump. To do this, loosen the fitting on the injection and repeat bleeding procedure.

3. Normally the engine will now start. If engine does not start, loosen each injector fitting at the engine and crank engine until steady stream of fuel runs out of fitting. Tighten fitting when foaming of fuels stops.

CHECKING WARNING INDICATOR LIGHTS

Each day before operating, assure all warning lights are working.

1. Apply parking brake, turn ignition key ON. Push warning indicator light button (Fig. 13). All lights should illuminate and the alarm will sound.

Note: Alarm will continue to sound until problem is corrected or until alarm silence button is pressed. If a second problem is encountered, the alarm will not sound but indicator light will illuminate.

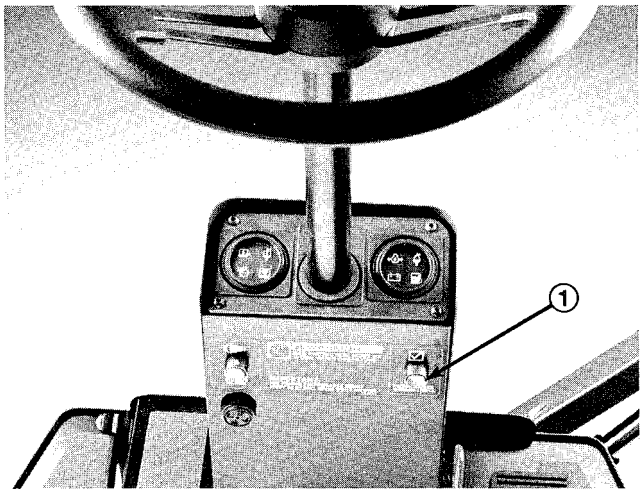

Figure 13

1. Warning Indicator Light Test Button

CHECKING INTERLOCK SYSTEM.

CAUTION

THE INTERLOCK SWITCHES ARE FOR THE OPERATOR'S PROTECTION, SO DO NOT DISCONNECT THEM. CHECK OPERATION OF THE SWITCHES DAILY TO ASSURE INTERLOCK SYSTEM IS OPERATING. IF A SWITCH IS DEFECTIVE, REPLACE IT BEFORE OPERATING. REGARDLESS IF SWITCHES ARE OPERATING PROPERLY OR NOT, REPLACE THEM EVERY TWO YEARS TO ASSURE MAXIMUM SAFETY.

1. In a wide open area free of debris and bystanders, lower cutting units to the ground. Stop engine.

2. Sit on the seat and engage parking brake (Fig. 14). Turn key and try to start engine with Mow–Backlap lever (Fig. 14) in both the MOW and BACKLAP positions. If engine cranks, there is a malfunction that must be repaired immediately. If engine does not crank, the cutter drive switch is operating properly.

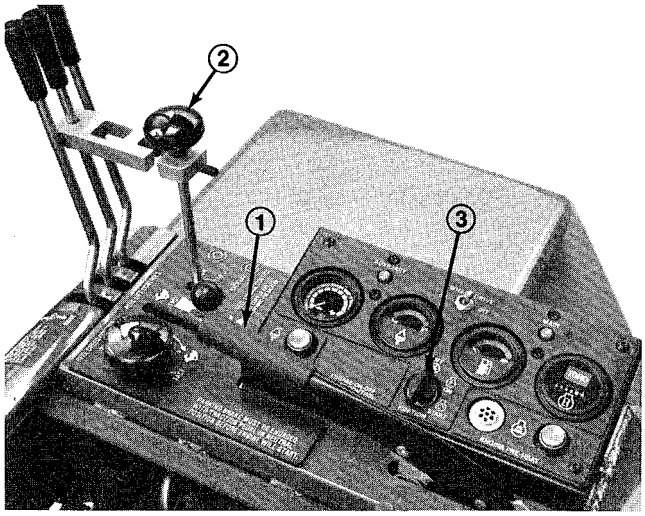

Figure 14
1. Parking Brake
2. Mow / Backlap Lever
3. Key

3. Sit on the seat and disengage the parking brake (Fig. 14). Turn key and try to start engine with Mow–Backlap lever (Fig. 14) in STOP. If engine cranks, there is a malfunction that must be repaired immediately. If engine does not crank, brake switch is operating properly.

4. Engage parking brake (Fig. 14), start engine and lower cutting units. Move Mow–Backlap lever (Fig. 14) to MOW. Raise off the seat; engine should stop within a few seconds, which indicates the interlock system is operating. Also raise off the seat with lever in BACKLAP. Engine should stop, indicating interlock system is operating. If engine does not stop, there is a malfunction that must be repaired immediately.

Note: There is a 1 – 2 second delay between rising off seat and engine shut off.

5. Engage parking brake, move Mow–Backlap lever to NEUTRAL, start engine, disengage hand brake and raise off seat. If engine stops, interlock system is operating. If engine does not stop, there is a malfunction that must be repaired immediately.

TRACTION PEDAL RESPONSE

Normally, traction pedal adjusting knob (Fig. 18) should be screwed in fully. For trimming or quicker pedal response, unscrew the adjusting knob 1 to 2 clicks.

To adjust traction pedal:

1. Remove retainer clip from seat lock rod (Fig. 15).

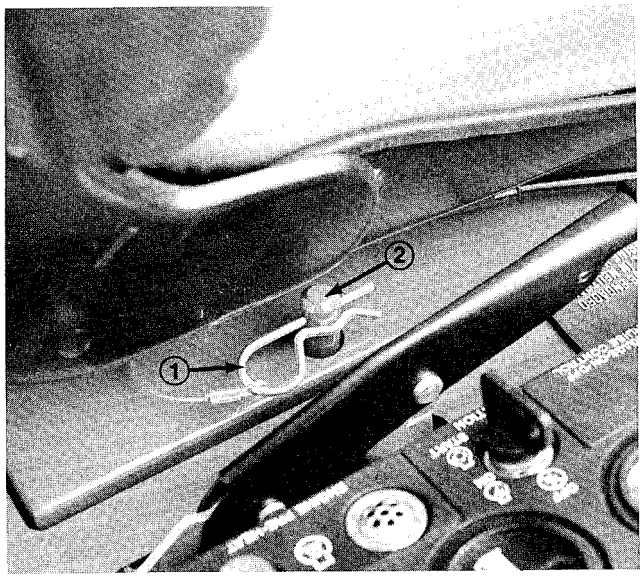

Figure 15
1. Retainer Clip 2. Seat Lock Rod

2. Raise seat and support it in upright position with seat support rod (Fig. 16).

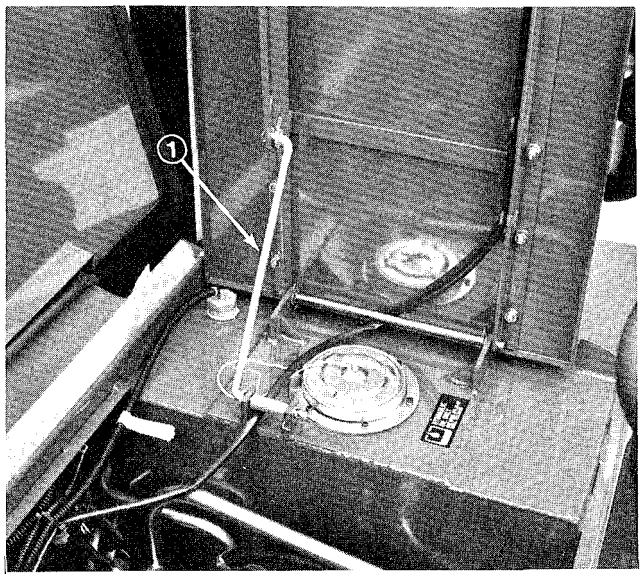

Figure 16
1. Seat Support Rod

3. Lift and remove front panel (Fig. 17).

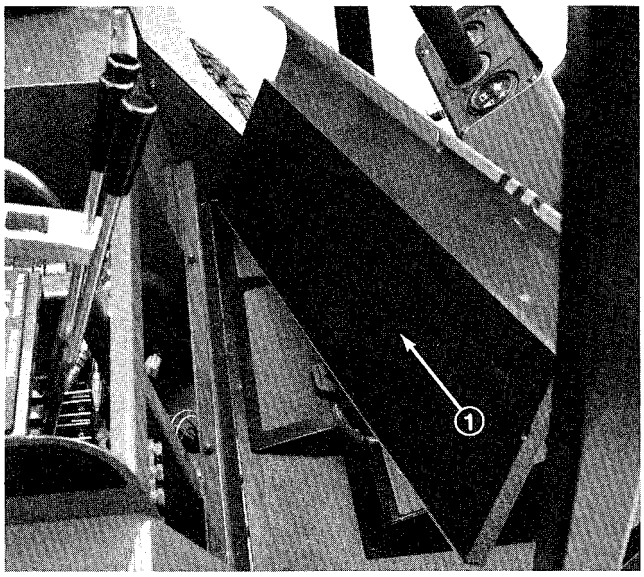

Figure 17
1. Front Panel

4. Rotate traction pedal adjusting knob clockwise to increase pressure (slower response) and counter-clockwise to decrease pressure (quicker response) (Fig. 18).

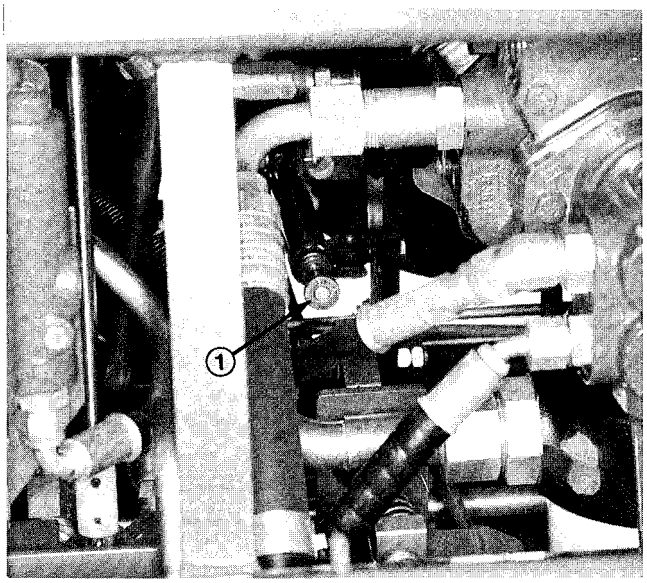

Figure 18
1. Traction Pedal Adjusting Knob

5. Install front panel over mounting pins (Fig. 17). Lower seat to its normal position and secure with retainer clip (Fig. 16).

PUSHING OR TOWING TRACTION UNIT

In an emergency, the traction unit can be pushed or towed for a very short distance, by using the traction pump by–pass valve.

IMPORTANT: Do not push or tow the traction unit faster than 2 to 3 MPH (3 to 5 Km/Hr) because hydraulic system may be damaged. If traction unit must be moved a considerable distance, transport it on a truck or trailer.

1. Remove retainer clip from seat lock rod (Fig. 15).

2. Raise seat and support it in upright position with seat support rod (Fig. 16).

3. Lift and remove front panel (Fig. 17).

4. Rotate by–pass valve 90 degrees (Fig. 19). Opening the valve opens an internal passage in the traction pump, thereby by–passing hydraulic oil. Because oil is by–passed, traction unit can be moved without damaging the hydraulic system.

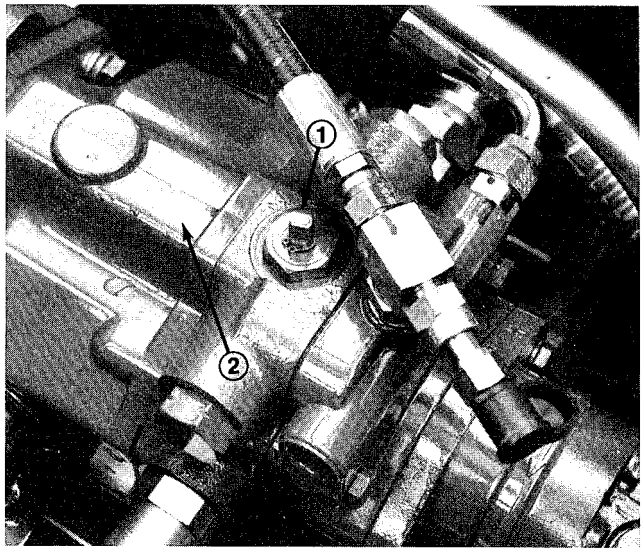

Figure 19
1. By–Pass Valve 2. Traction pump

IMPORTANT: Make sure that hand brake is engaged before opening the by–pass valve.

2. Before starting engine, close by–pass valve. Do not start engine when valve is open.

IMPORTANT: Running the machine with the by–pass valve open will cause the hydraulic system to overheat.

DANGER

Vehicle will roll with front wheel motors disengaged. Vehicle must be on level surface or wheels must be blocked. There is no effective braking with wheel motors disengaged.

If towing, with front wheel motors disengaged, Tow Bar Assembly, Toro part no. 58–7020, must be used.

OPERATING INSTRUCTIONS

OPERATING CHARACTERISTICS

Familiarization – Before mowing grass practice operating in an open area. Start and stop the engine. Operate in forward and reverse. Lower and raise cutting units simultaneously and individually. Engage and disengage reels. Operate with all cutting units down, then with only an individual cutting unit. When you feel familiar with the machine, practice operating around trees and obstacles. Also drive up and down slopes using both mowing and transport speeds.

WARNING: When operating 4 wheel drive machine, always use the seat belt and ROPS together.

Warning System – If a warning light comes on during operation, stop the machine immediately and correct the problem before continuing operation. Serious damage could occur if the machine is operated with a malfunction. For short intervals, however, the emergency engine override button (Fig. 11) can be used to operate the engine if it stops because of overheating.

Mowing –When you are at the area to be mowed, release front, center and outside cutting unit transport latches, lower cutting units, engage hand brake and stop the engine.

Cutting Unit Grass Deflectors – Adjust grass deflectors to horizontal position (Fig. 20), so clippings disperse backward; out and away from the cutting units. This will prevent clumps of clippings, especially wet clippings, dropping off the machine or cutting units, which affects the visual appearance of the turf.

Note: Generally you can adjust the deflectors down slightly in dry grass and up slightly in wet grass.

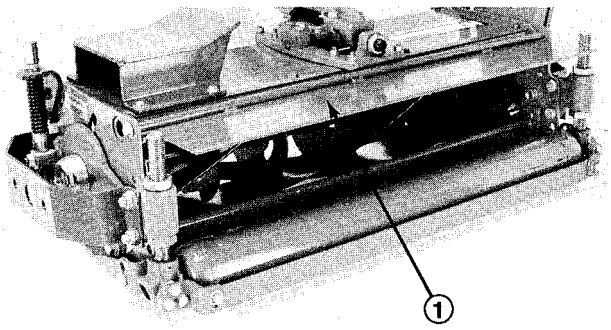

Figure 20
1. Grass Deflector

While checking speedometer, match ground speed limiter (Fig. 21) and reel speed control knob (Fig. 22) to desired height–of–cut: refer to Cutting Chart (Fig. 23). Use decal at side of steering column as a guide only.

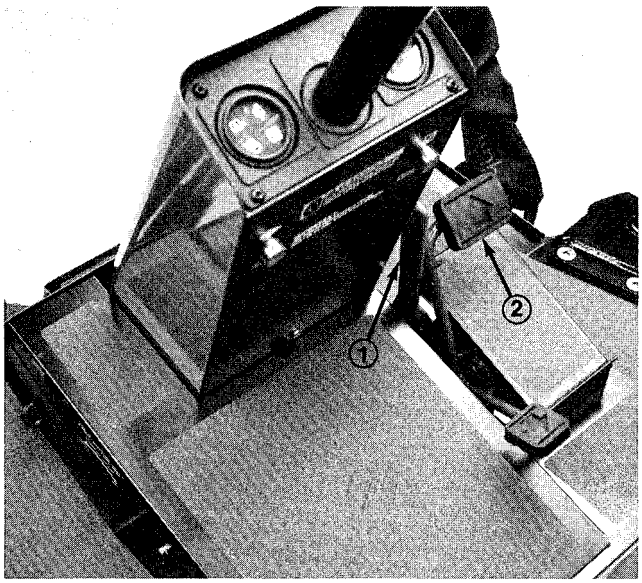

Figure 21
1. Ground Speed Limiter
2. Traction Pedal

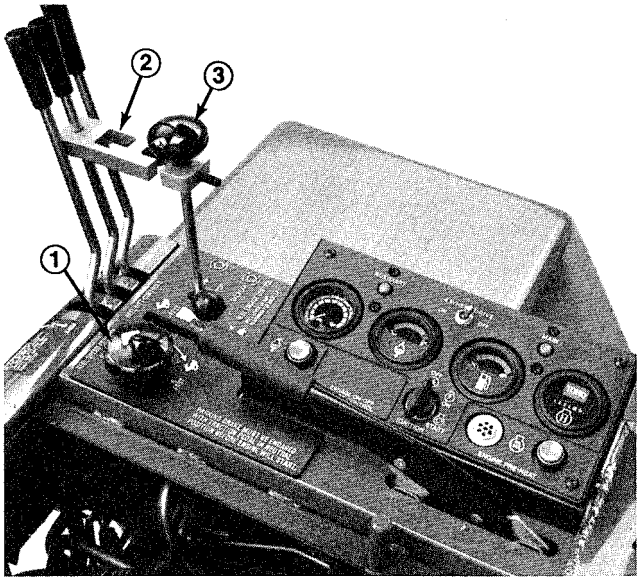

Figure 22
1. Reel Speed Control Knob
2. Cross Cut Lever
3. Mow / Backlap Lever

Cross Cut Link - When engaging / disengaging center lift control lever, cross cut link (Fig. 22) will simultaneously engage / disengage the mow control lever to eliminate the need for two separate hand operations. If mow control lever does not follow the motion of the lift control lever during operation, adjust set screw(s) as required.

When permanent use of cross cut link is not desired, it can be removed by unscrewing lift control knob and loosening set screw.

To temporarily disconnect cross cut link, stop engine, pull back on lift lever until slot in link is aligned with mow control lever and swing link to the side.

OPERATING INSTRUCTIONS

Start engine and move throttle to FAST so engine is running at maximum speed. Move Mow–Backlap lever (Fig. 22) to MOW. Reels are now spinning. Disengage hand brake. To move forward and cut grass, press traction pedal forward (Fig. 21). Maintain traction pedal contact with ground speed limiter (Fig. 21) to assure consistent clip and quality–of–cut.

CAUTION: This product may exceed noise levels of 85 dB(A) at the operator position. Ear protectors are recommended for prolonged exposure to reduce the potential of permanent hearing damage.

Transport – When mowing is complete, move MOW–BACKLAP lever to STOP. Raise cutting units by pulling back on lift control levers. Hold levers back until cutting units are fully raised (a squeal from the hydraulic system means cutting units are fully raised). Lock cutting units in place with transport latches. When driving from one area to another, use slower ground speed. Be careful when driving between objects so you do not accidentally damage the machine or cutting units.

Matching Ground Speed and Reel Speed – Vary reel speed (while maintaining constant ground speed) to establish the best quality of cut for the area being mowed. Reel speeds either too fast or too slow for conditions may effect the quality of cut. Use the following cutting chart (Fig. 23) and decal on steering console as a guide for initial adjustment of ground and reel speeds.

CUTTING CHARTS

Relate HOC and ground speed to required reel speed setting on a 1 thru 5 scale on reel speed knob. Note: 1 = 800 RPM; 2 = 900 RPM; 3 = 1000 RPM; 4 = 1100 RPM and 5 = 1200 RPM (Fig. 26).

* Speeds are approximate

Recommended Reel Speed Settings

5 Blade Reel

HOC	Ground Speed In MPH				
	3	4	5	6	7
1	1	3	5	N/R	N/R
1.25	N/R	1	3	5	N/R
1.5	N/R	N/R	2	3	4
2	N/R	N/R	N/R	1	2
2.5	N/R	N/R	N/R	N/R	1

7 Blade Reel

HOC	Ground Speed In MPH				
	3	4	5	6	7
1/2	2	5	N/R	N/R	N/R
5/8	1	3	5	N/R	N/R
3/4	N/R	1	3	5	N/R
1	N/R	N/R	1	2	3
1.25	N/R	N/R	N/R	1	2

11 Blade Reel

HOC	Ground Speed In MPH				
	3	4	5	6	7
3/8	1	3	5	N/R	N/R
1/2	N/R	1	3	4	N/R
5/8	N/R	N/R	1	2	4
3/4	N/R	N/R	N/R	1	2

Note: N/R = Not Recommended

Figure 23

LUBRICATION

⚠ CAUTION

Before servicing or making adjustments to the machine, stop engine and remove key from the switch.

GREASING BEARINGS AND BUSHINGS

The machine has grease fittings that must be lubricated after every 50 hours of operation with No. 2 General Purpose Lithium Base Grease. Lubricate fitting immediately after every washing regardless of interval listed. The lubrication points are: lift arms (5) (Fig. 24), rear axle (6) (Fig. 25), floating or fixed head kit pivots (Fig. 26) and cutting unit reel and roller bearings (Fig. 27). Also, grease fitting on reel control valve (not shown), located under right hand console.

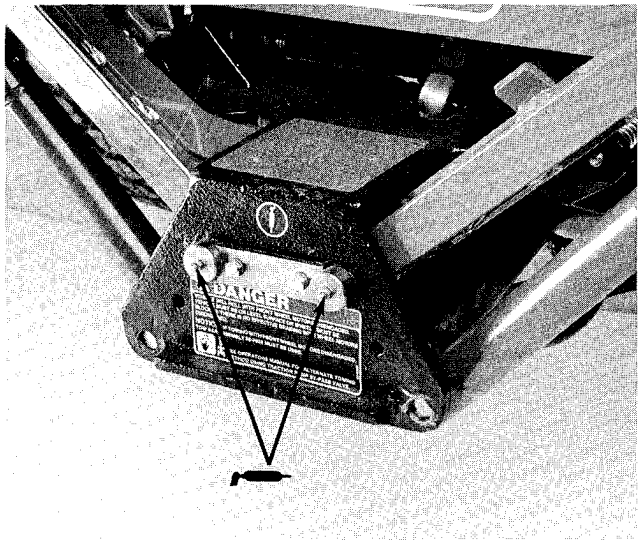

Figure 24
Lift Arms (5 fittings)

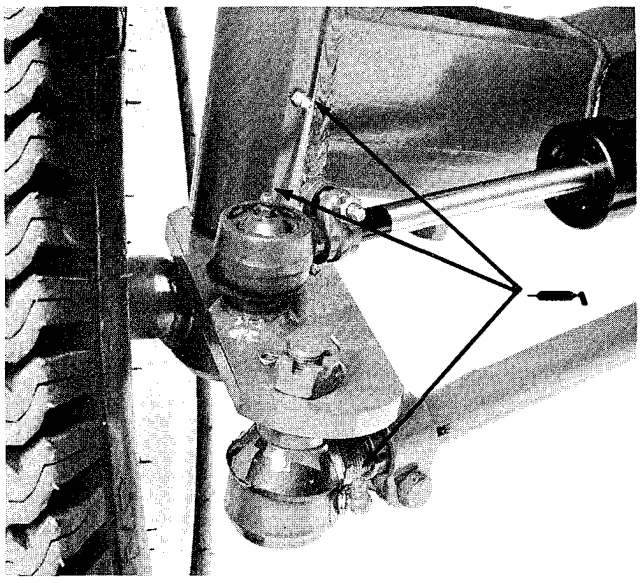

Figure 25
Rear Axle (6 fittings)

NOTE: Remove the plastic caps over the fittings on the floating or fixed head kit pivots and replace after greasing (Fig. 26).

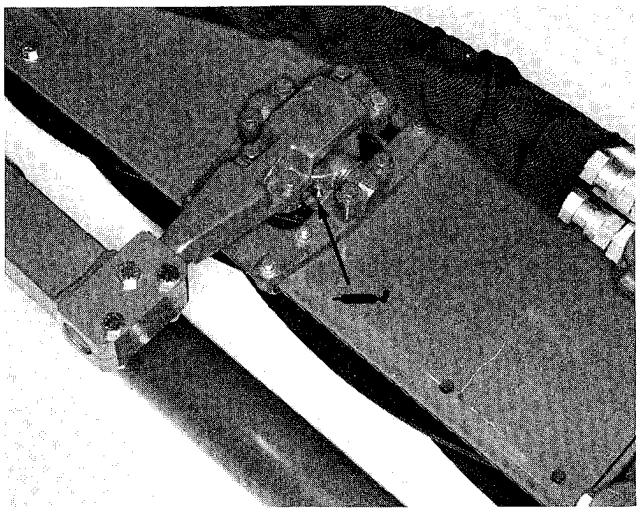

Figure 26
Floating or Fixed Head Kit Pivots (Floating Head Kit Shown)

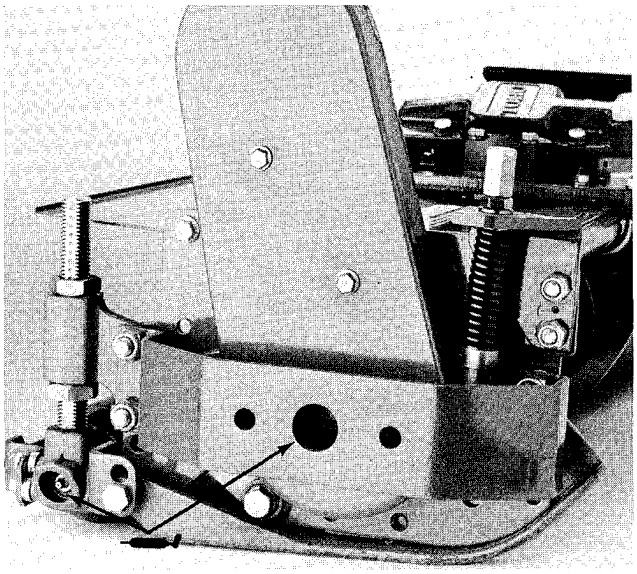

Figure 27
Reel & Roller Bearings

1. Wipe grease fitting clean so foreign matter cannot be forced into the bearing or bushing.
2. Pump grease into the bearing or bushing.
3. Wipe up excess grease.

MAINTENANCE CHART AND CHECKLIST

Daily Maintenance: (duplicate this page for routine use)
Check proper section of Operator's Manual for fluid specifications

Maintenance Check Item ➧	Daily Maintenance Check For Week Of _____						
	MON	TUES	WED	THURS	FRI	SAT	SUN
✓ Safety Interlock Operation							
✓ Parking Brake Operation							
✓ Engine Oil Level							
✓ Fuel Level							
✓ Cooling System Fluid Level							
Drain Water/Fuel Separator							
✓ Dust Cup & Baffle (Air Filter)							
✓ Radiator and Screen for Debris[1]							
Clean Traction Pedal Lockout							
✓ Unusual Engine Noises[2]							
✓ Unusual Operating Noises							
✓ Hydraulic System Oil Level							
✓ Hydraulic Hoses for Damage							
✓ Fluid Leaks							
✓ Tire Pressure							
✓ Instrument Operation							
✓ Warning Lamps Operation							
✓ Reel–to–Bedknife Adjustment							
✓ Height–of–Cut Adjustment							
Lubricate All Grease Fittings[3]							
Touch–up Damaged Paint							

[1]= Use only low pressure compressed air for debris removal. **Do not use water.**
[2]= Check glow plugs and injector nozzles, if hard starting excess smoke or rough running is noted.
[3]= Immediately after every washing, regardless of the interval listed.

Notation for areas of concern: Inspection performed by_____

Item	Date	Information
1		
2		
3		
4		
5		
6		
7		
8		

MAINTENANCE

CAUTION

Before servicing or making adjustments to the machine, stop engine and remove key from the switch.

GENERAL AIR CLEANER MAINTENANCE

To prevent possible severe engine damage and ensure maximum engine service life, periodically inspect the air cleaner and hose assembly.

1. Assure hose between air cleaner and intake manifold is clamped securely in place. Replace the hose if it is cracked or punctured.

2. Check air cleaner body for dent and other damage which could possibly cause an air leak. Replace a damaged air cleaner body.

3. Mounting screws and nuts holding air cleaner in place must be tight.

PRECLEANER BOWL SERVICE

1. Precleaner bowl (Fig. 28) – Inspect precleaner bowl daily. When conditions are extremely dusty and dirty, inspect precleaner bowl more frequently. Do not let dust build up above level marks on precleaner bowl.

A. Remove thumb screw. Separate cover and precleaner bowl.

B. Dump dust and wipe precleaner bowl clean.

C. Assemble and install precleaner bowl, cover and thumb screw.

AIR CLEANER FILTER SERVICE

1. Filter Service (Fig. 28) –The warning indicator light or audible signal warn the air filter is clogged. Also, lack of power, excessive oil consumption and excessive exhaust smoke could mean that the filter needs cleaning. Service the air cleaner filter every 200 operating hours, or more frequently in dusty and dirty conditions. Replace filter after every six cleanings (800 hrs.) or annually, whichever comes first.

A. Loosen mounting band screw. Remove dust cup and baffle assembly, then separate parts. Wipe dust cup clean and reassemble parts.

B. Unscrew wing nut and slide filter out of body. Clean filter by washing or using compressed air.

Washing Filter – Soak filter for 15 minutes in a filter cleaner and water (cleaner part no. 27–7220 has complete instructions). DO NOT REMOVE PLASTIC FIN ASSEMBLY. When clean, rinse filter with clean water. Do not use high water pressure (above 40 psi – 276 kPa) because it could damage the filter. Allow filter to air dry or use warm flowing air (160° F, 71° C). DO NOT USE COMPRESSED AIR OR A LIGHT BULB FOR DRYING A WET FILTER BECAUSE THE FILTER COULD BE DAMAGED.

Compressed Air – Blow compressed air from inside to outside of the filter. DO NOT EXCEED 100 psi BECAUSE THE FILTER COULD BE DAMAGED.TO PREVENT DAMAGE, KEEP AIR NOZZLE AT LEAST AN INCH AWAY FROM THE PAPER PLEATS. Shine a bright light inside the filter to check for cleanliness and defects (tears, holes, ruptures, fins, gasket and screen). Replace filter if it is defective.

C. Install filter and secure with wing nut. Place cap and baffle assembly against body and secure with mounting band.

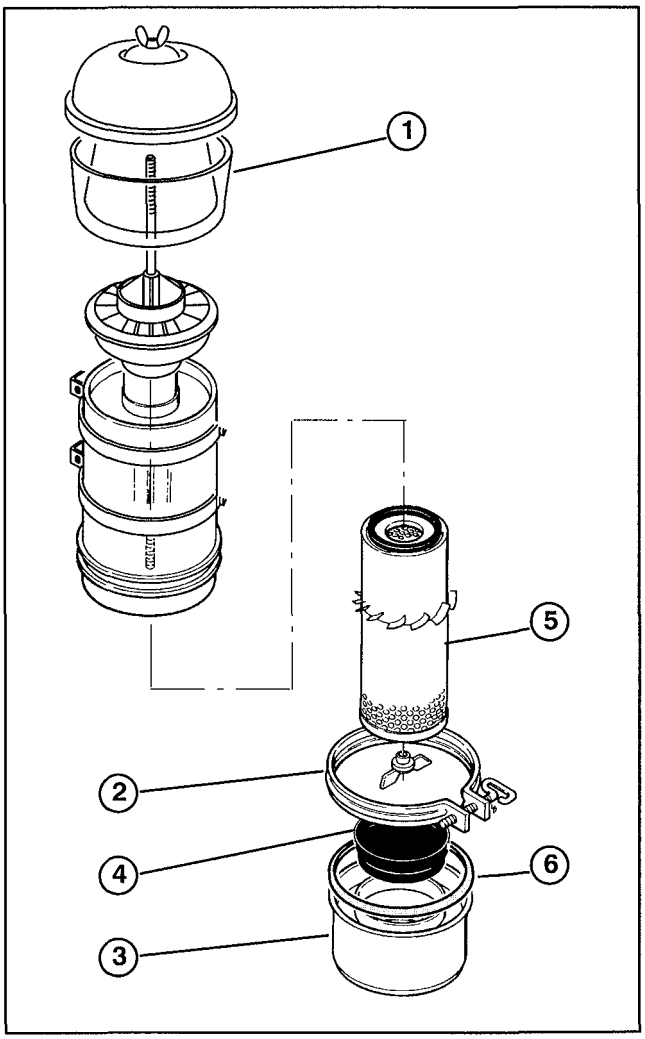

Figure 28

1. Precleaner Bowl	**4. Baffle**
2. Mounting Band	**5. Filter**
3. Dust Cup	**6. Gasket**

MAINTENANCE

CAUTION

Before servicing or making adjustments to the machine, stop engine and remove key from the switch.

ENGINE OIL AND FILTER

Change oil and filter after the first 50 hours of operation and every 100 hours thereafter.

1. Remove drain plug (Fig. 29) and let oil flow into drain pan. When oil stops, install drain plug.

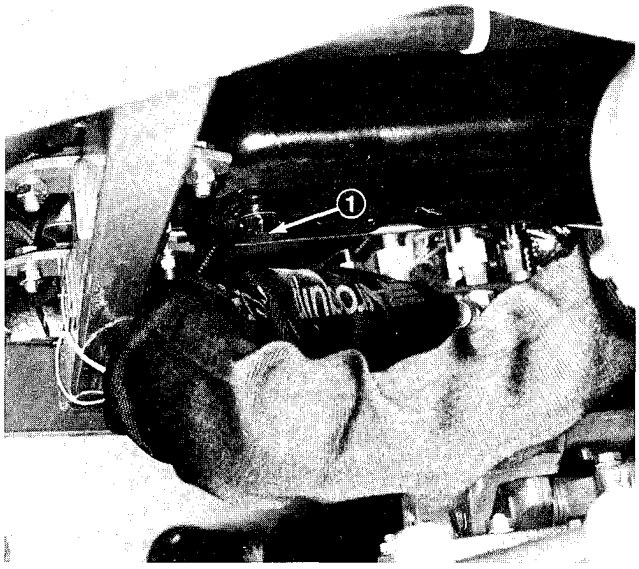

Figure 29
1. Drain Plug

2. Remove oil filter (Fig. 30). Apply a light coat of clean oil to the new filter seal before screwing it on. DO NOT OVER–TIGHTEN.

3. Add oil to crankcase.

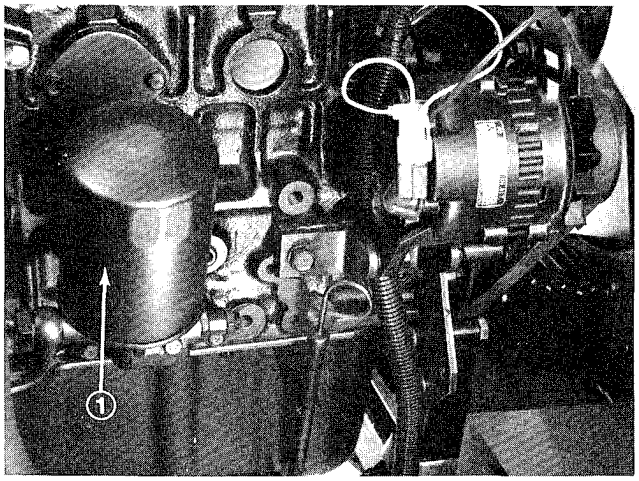

Figure 30
1. Oil Filter

FUEL SYSTEM

1. Draining Water From Fuel System (Fig. 31) – Drain water from fuel system daily or when warning light indicates excess water has collected. To drain, loosen drain fitting on bottom of fuel filter. Drain into a container until only fuel is evident.

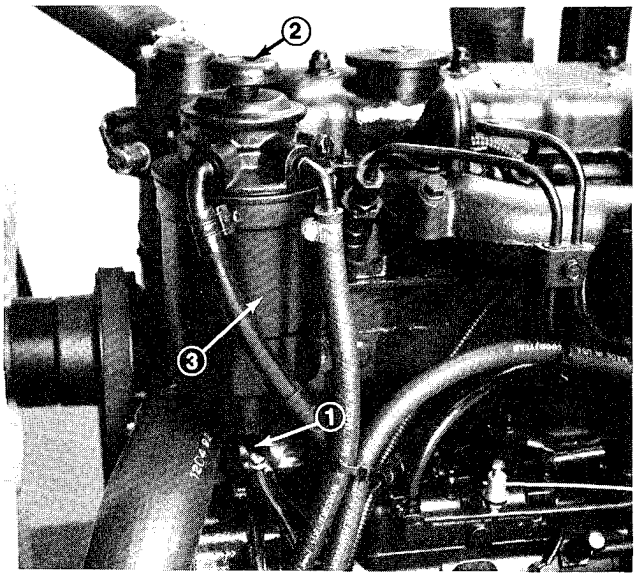

Figure 31
1. Drain Outlet 2. Plunger 3. Filter

2. Replacing Filter (Fig. 32) – Replace filter if fuel flow is restricted, after every 500 hours of operation, or annually, whichever comes first. To replace, disconnect wire connectors and unscrew drain outlet and O–ring . Unscrew filter and replace with new Toro filter. Install drain plug and O–ring. Push wire connectors together.

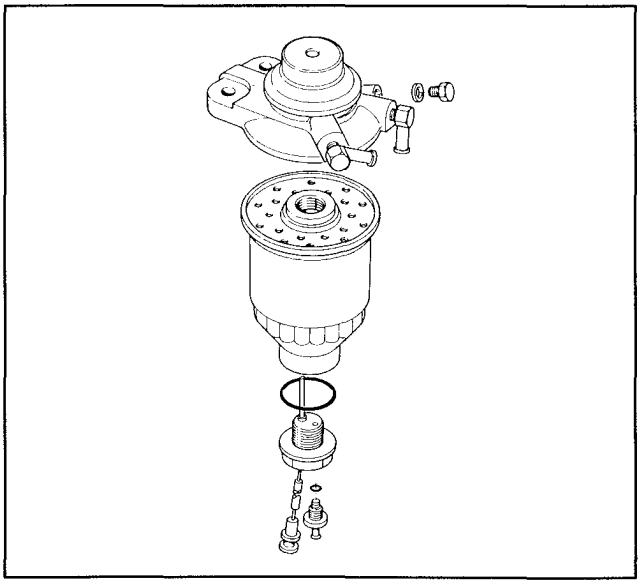

Figure 32

MAINTENANCE

CAUTION

Before servicing or making adjustments to the machine, stop engine and remove key from the switch.

ENGINE COOLING SYSTEM

1. Removing Debris – Remove debris from oil cooler, radiator and rear screen daily, clean more frequently in dirty conditions.

A. Turn engine off, release front engine cover latches and raise engine cover. Clean engine area thoroughly of all debris.

B. Loosen knobs securing rear screen to frame and remove screen (Fig. 33).

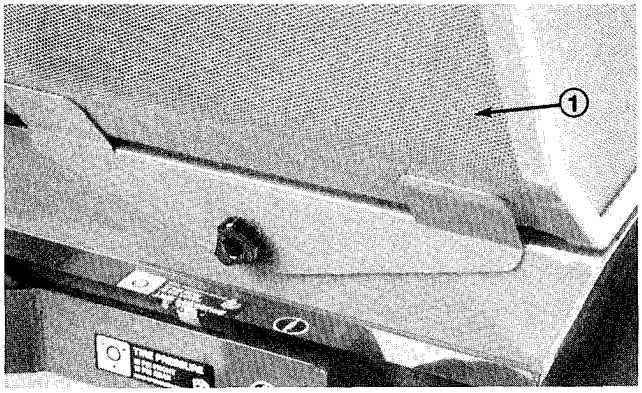

Figure 33
1. Rear Screen

C. Lift up on oil cooler handles and pivot rearward in mounting slot. Clean both sides of oil cooler, radiator and rear engine area thoroughly with compressed air.

D. Pivot oil cooler back into position and install rear screen.

E. Lower engine cover and secure latches.

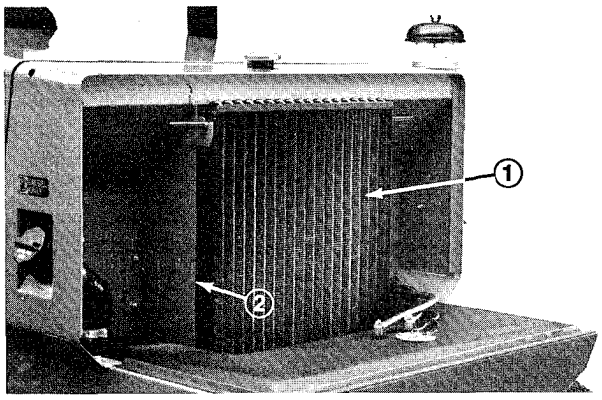

Figure 34
1. Oil Cooler
2. Radiator

2. Maintaining Cooling System – Capacity of the system is 7.4 qt. (7 l). Always protect cooling system with a 50/50 solution of water and ethylene glycol anti–freeze. DO NOT USE WATER ONLY IN COOLING SYSTEM.

A. After every 100 operating hours, tighten hose connections. Replace any deteriorated hoses.

B. After every 800 operating hours, drain and flush the cooling system. Add anti–freeze (refer to Check Cooling System.

ALTERNATOR BELT

1. Condition and Tension – Check condition and tension of belt (Fig. 35) after every 100 operating hours.

A. Proper tension will allow 3/8 in. (10 mm) deflection when a force of 10 lbs. is applied on the belt midway between the pulleys.

B. If deflection is not 3/8 in. (10 mm), loosen alternator mounting bolts. Increase or decrease alternator belt tension and tighten bolts. Check deflection of belt again to assure tension is correct.

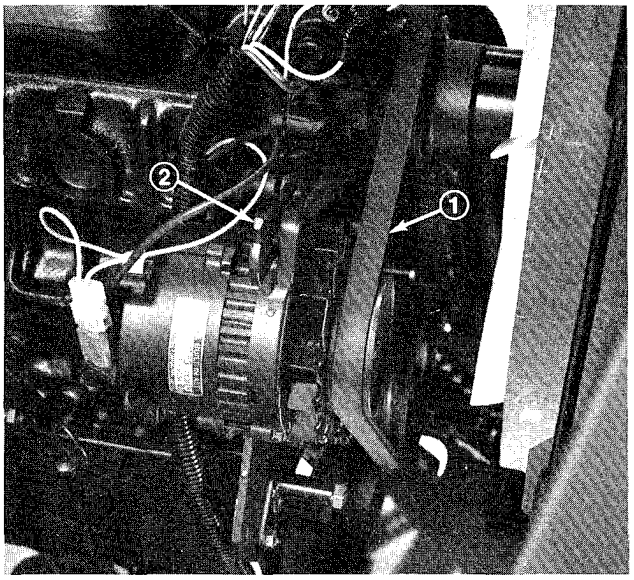

Figure 35
1. Alternator Belt
2. Mounting Bolt

BATTERY CARE

Check battery and cable connections after every 50 operating hours.

1. Turn engine off, release front engine cover latches and raise engine cover.

2. If battery or cables are damaged, worn or loose, make necessary repairs.

3. Check electrolyte level in each cell.

4. Install battery cover and secure with capscrews.

MAINTENANCE

CAUTION

Before servicing or making adjustments to the machine, stop engine and remove key from the switch.

ADJUSTING HAND BRAKE & TRACTION SWITCHES

In time, the hand brake cable may stretch, causing the engine not to start. If this happens, adjust the cable (Fig. 36).

1. Pull hand brake lever to 3rd click.

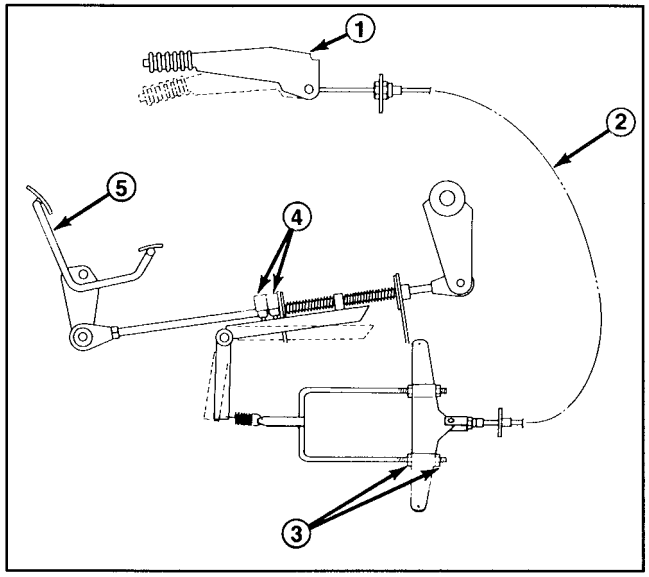

Figure 36

1. Parking Brake
2. Brake Cable
3. U–bracket Nuts
4. Traction Switches
5. Traction Pedal

2. Pull hand brake up one additional click.

3. Adjust four U–bracket nuts equally so spring has tension. Adjustment affects operation of traction switches.

4. Adjust four U–bracket nuts so engine will start and run when hand brake is at fourth click, but will not start or run when hand brake is at second click.

ADDING HYDRAULIC OIL

Capacity of the hydraulic reservoir is approximately 9.3 gal. (35.2 L). With machine on a level surface, hydraulic oil level should be 1/4 to 1/2 inch below arrows on sight glass, when oil is cold. Warm oil should be even with arrows on sight glass (Fig. 37). If level is low, add hydraulic oil. Refer to Hydraulic Oil Specifications.



Figure 37

1. Sigth Glass Arrows

1. Remove seat lock pin, raise seat and hold open with support rod.

2. Clean around reservoir cover (Fig. 38). Remove cover and add hydraulic oil until it is even with arrows on sight glass (Fig.37).

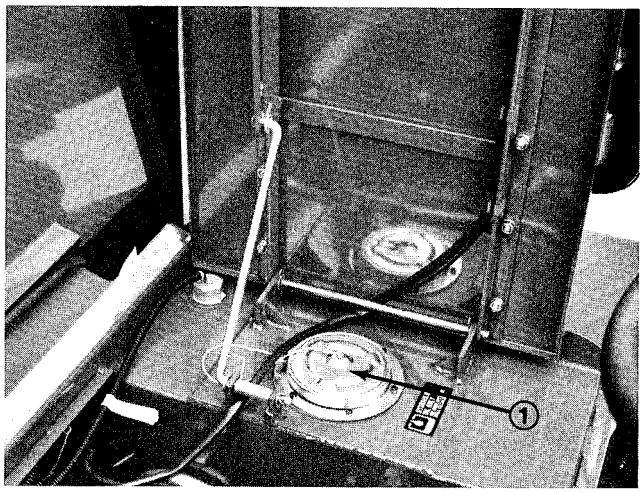

Figure 38

1. Reservoir Cover

IMPORTANT: To prevent contamination, clean top of hydraulic oil containers before puncturing. Assure pour spout and funnel are clean.

3. Install reservoir cover, lower seat and secure with lock pin.

CAUTION

Before servicing or making adjustments to the machine, stop engine and remove key from the switch.

DRAINING WATER FROM HYDRAULIC RESERVOIR

After every 100 operating hours, drain water from hydraulic reservoir.

1. Open drain plug (Fig. 39) one–half turn and allow fluid to flow into drain pan until water is not noticed in hydraulic oil.

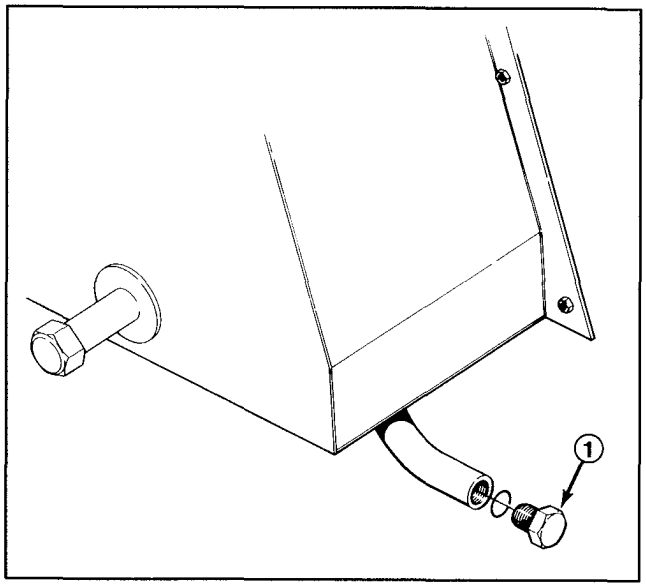

Figure 39
1. Drain Plug

2. Tighten drain plug and add hydraulic oil, Refer to Adding Hydraulic Oil.

CHANGING HYDRAULIC OIL

Normally, change hydraulic oil after every 2 years or 1500 operating hours. If oil becomes contaminated, contact your local TORO distributor because the system must be flushed. Contaminated oil looks milky or black when compared to clean oil.

1. Remove drain plug (Fig. 39) from reservoir and let hydraulic oil flow into drain pan. Tighten plug when hydraulic oil stops draining.

2. Fill reservoir with approximately 9.3 gallons of hydraulic oil. Refer to Hydraulic Oil Specifications.

IMPORTANT: Use only hydraulic oils specified. Other fluids could cause system damage.

3. Install reservoir cover, lower seat and secure with lock pin. Start engine and use all hydraulic controls to distribute hydraulic oil throughout the system. Also check for leaks. Then stop the engine.

4. With cutting units up and oil warm, look into sight glass (Fig. 37). If hydraulic oil is not even with arrows, add enough to raise to proper level. Do not fill full if oil is cold.

REPLACING HYDRAULIC FILTER

Initially, change filter after the first 50 operating hours, thereafter, every 800 operating hours, annually, or on indication.

Use Toro replacement filter (Part No. 86–6110).

IMPORTANT: Use of any other filter may void the warranty on some components.

1. Remove seat lock pin, raise seat and hold open with support rod. Also remove panel (secured with magnets) ahead of the seat.

2. Clean area around filter mounting area (Fig. 40). Place drain pan under filter and remove filter.

3. Lubricate new filter gasket and fill the filter with hydraulic oil.

4. Assure filter mounting area is clean. Screw filter on until gasket contacts mounting plate. Then tighten filter one–half turn.

5. Start engine and let run for about two minutes to purge air from the system. Stop the engine and check for leaks.

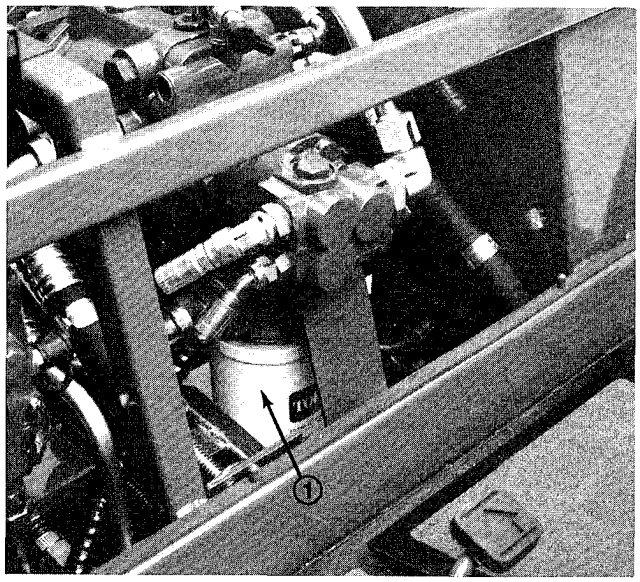

Figure 40
1. Hydraulic Filter

6. Look into sight glass (Fig. 37). Hydraulic oil level should be even with arrows when oil is warm. If level is low, add hydraulic oil to the reservoir. Refer to Hydraulic Oil Specifications.

Note: Under certain conditions, a bypass valve in the filter mounting plate allows oil to bypass the filter. Before the filter starts to bypass a warning light on the steering console will illuminate. The warning light may come on momentarily when the oil is cold. If the light does not go out after the oil is warm, the filter is clogged or an electrical problem exists. Correct problem before commencing operation.

CAUTION

Before servicing or making adjustments to the machine, stop engine and remove key from the switch.

REPLACING HYDRAULIC SYSTEM BREATHER

Change hydraulic system breather after every 800 operating hours, or annually, whichever comes first. More often in extremely dusty or dirty conditions.

1. Release latches and open engine cover.

2. Clean around the breather and unscrew it with a wrench (Fig. 41). Install new breather.

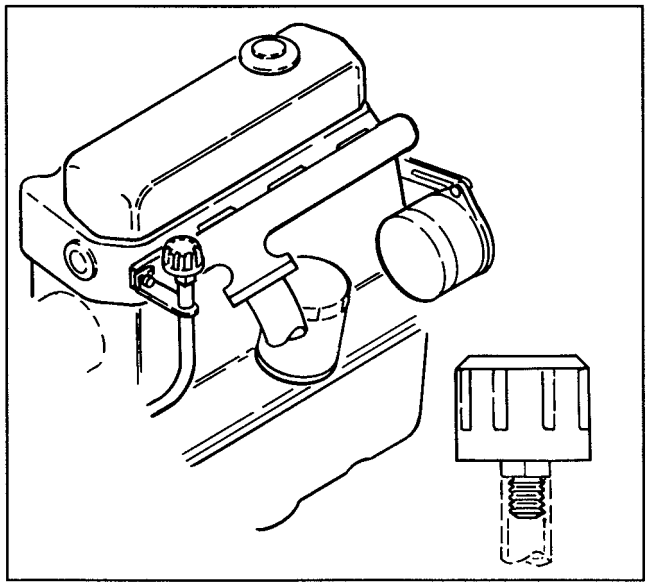

Figure 41

3. Close engine cover and latch securely.

CHECKING HYDRAULIC LINES AND HOSES

Check hydraulic lines and hoses daily for leaks, kinked lines, loose mounting supports, wear, loose fittings, weather deterioration and chemical deterioration. Make all necessary repairs before operating.

HYDRAULIC SYSTEM TEST PORTS

The test ports (Fig. 42) are used to test the hydraulic circuits. Check all pressures when engine is at full speed and hydraulic oil is at normal operating temperature. Contact your local toro distributor for assistance.

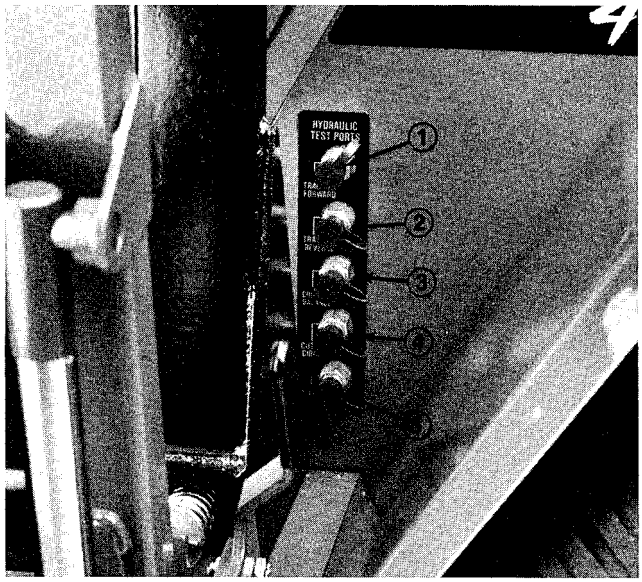

Figure 42

1. Traction Forward
2. Traction Reverse
3. Cutting Unit Counterbalance
4. Cutting Circuit
5. Steering Circuit

1. Traction Forward and Reverse has a normal relief setting of approximately 5300 psi and 50 – 150 psi charge pressure. Use a gauge with 7500 – 10,000 psi full scale rating.

2. Cutting unit Counterbalance has adjustable pressure.

Normal Setting	Hot Oil: 500–550 psi
	Cold Oil: 600–650 psi
Maximum Hill Climbing Setting	
	Hot Oil: 550+ psi
	Cold Oil: 650+ psi
Maximum Quality of Cut Setting	
	Hot Oil: 500 psi
	Cold Oil: 600 psi

Lift circuit relief pressure is approximately 2650 psi when counterbalance setting is 550 psi.

Note: Changes in counterbalance setting will effect the lift circuit relief pressure.

3. Cutting Circuit has a normal relief setting of approximately 2700–3000 psi.

4. Steering Circuit has a normal relief setting of approximately 1500 psi.

NOTE: Test ports for Lift/Relief (on valve) and Charge Pressure (on pump) are under seat.

REAR WHEEL TOE–IN

After every 800 operating hours or annually, check rear wheel toe–in.

1. Measure center–to–center distance (at axle height) at front and rear of steering tires (Fig. 43). Front measurement must be 1/8 in. less than rear measurement.

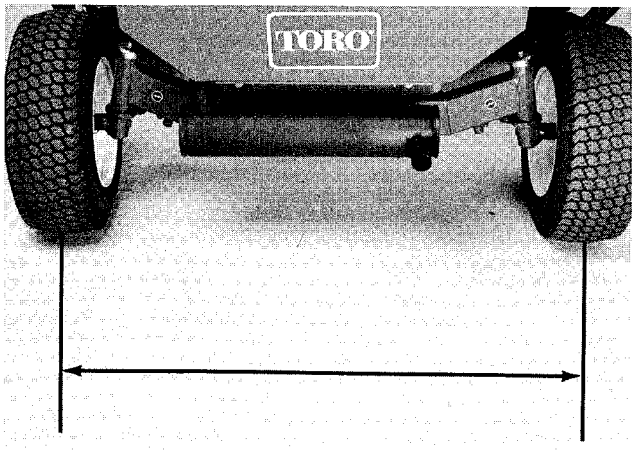

Figure 43

2. Loosen clamps at both ends of tie rods (Fig. 44).

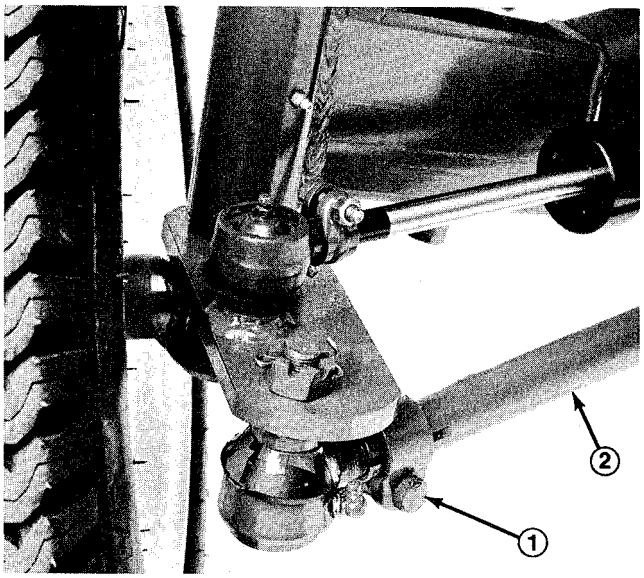

Figure 44
1. Clamp 2. Tie Rod

3. Rotate tie rod to move front of tire inward or outward.

4. Tighten tie rod clamps when adjustment is correct.

Note: Make sure tie rod clamps are positioned so they do not interfere with steering linkage.

CHECKING PLANETARY GEAR DRIVE

Initially, check oil level after 50 operating hours and check every 800 hours thereafter. Oil capacity is approximately 30 oz. (885 ml) high quality 80–90 wt. Gear Lube.

1. To check the oil level, the oil should be at the bottom of the check/drain plug hole (Fig. 45) when the hole is placed in the 3 o'clock or 9 o'clock position. The traction unit must be on level ground when making this check.



Figure 45
1. Check/Drain Plug

CYLINDER HEAD BOLTS

Re–torque initially after 50 operating hours and every 400 operating hours thereafter (refer to engine manual).

ENGINE VALVE CLEARANCE

1. Adjust initially at 50 operating hours and every 400 operating hours thereafter (refer to engine manual).

ELECTRICAL SCHEMATIC

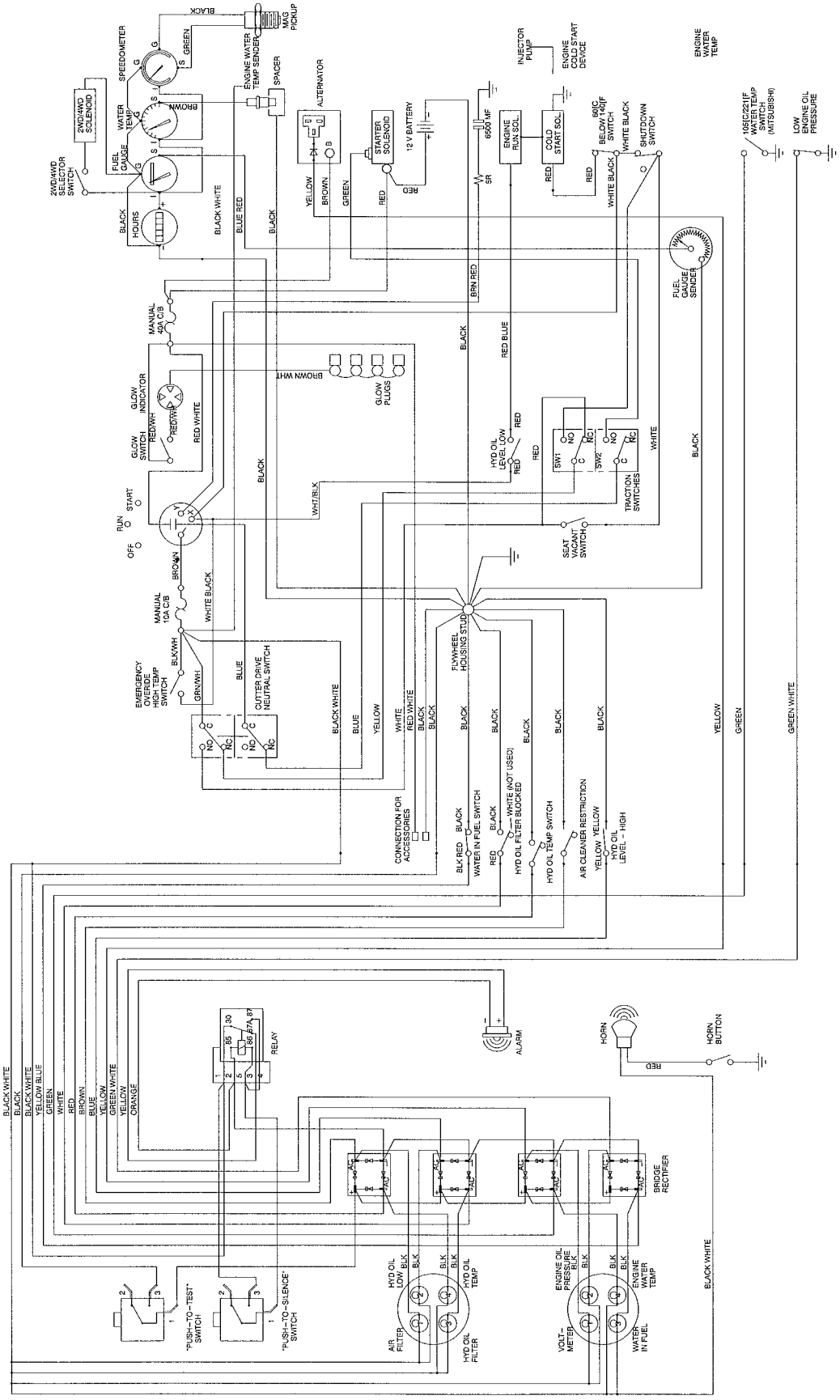

HYDRAULIC SCHEMATIC

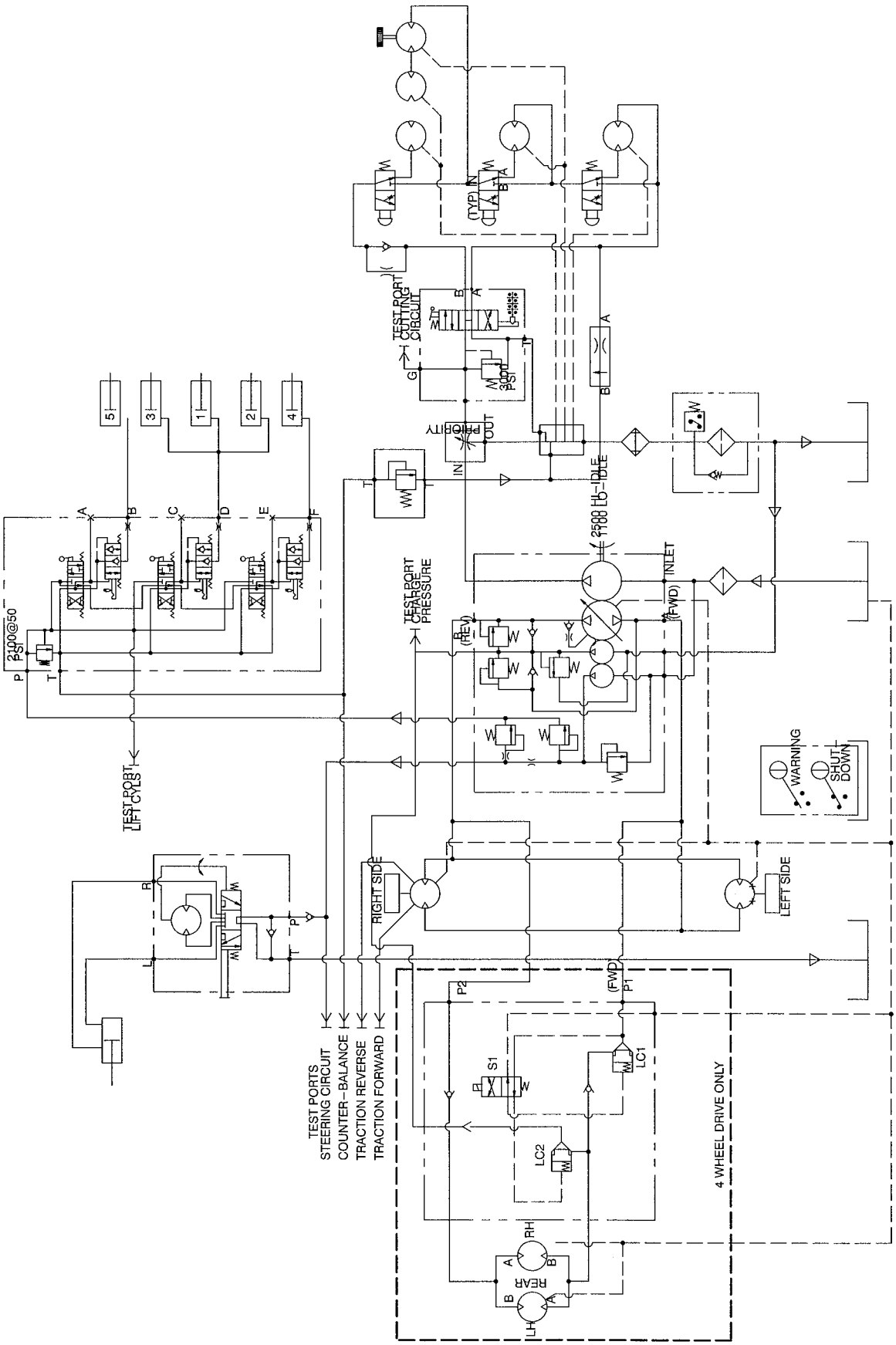

MAINTENANCE SCHEDULE

Minimum Recommended Maintenance Intervals

Maintenance Procedure	Maintenance Interval & Service

	Every 50hrs	Every 100hrs	Every 200hrs	Every 400hrs	Every 800hrs
Lubricate Reel Control Valve Grease Fitting					
Lubricate Reel Speed Valve with Oil					
Lubricate All Grease Fittings					
Check Battery Condition and Connections					
‡ Change Engine Oil and Filter					
Drain Water from Hydraulic Tank					
† Check Engine Fan and Alternator Belt					
Inspect Cooling System Hoses					
Service Air Cleaner Filter Element					
Inspect Cutting Unit Reel Drive Belts					
† Torque Wheel Lug Nuts					
Replace Fuel Filter					
Inspect Fuel Lines and Connections					
‡ Torque Cylinder Head and Adjust Valves					
‡ Check Engine RPM (idle and full throttle)					
Drain and Clean Fuel Tank					
‡ Replace Hydraulic Oil Filter					
Replace Hydraulic Tank Breather					
‡ Change Front Planetary Gear Lube					
Pack Rear Wheel Bearings					
Check Rear Wheel Toe–in					

† Initial break in at 10 hours

‡ Initial break in at 50 hours

Replace Moving Hydraulic Hoses Replace Safety Switches Coolant System – Flush/Replace Fluid Change Hydraulic Oil	**Annual Recommendations:** *Items listed are recommended every 1500 hours or 2 years, whichever occurs first.*

(See Operator's and Service Manual for specifications and procedures)

PRODUCT IDENTIFICATION

The traction unit has two identification numbers: a model number and a serial number that are stamped into a plate. The identification plate is located on a plate that is mounted on the frame, just ahead of the right front wheel (Fig. 46). In any correspondence concerning the traction unit, supply the model and serial numbers to ensure correct information and replacement parts are obtained.

To order replacement parts from an Authorized TORO Distributor supply the following information:

1. Model and serial numbers of the traction unit.

2. Part number, description and quantity of parts desired.

Note: Do not order by reference number if a parts catalog is being used; use the part number.

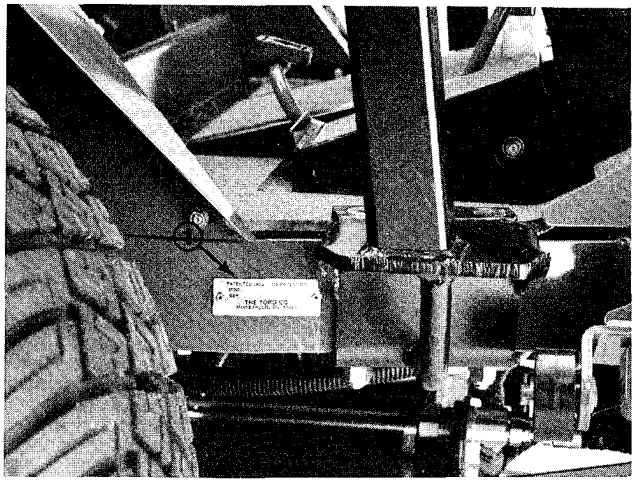

Figure 46

1. **Model and serial ID plate**

NOTES

The Toro Promise

A One Year Limited Warranty

The Toro Company promises to repair your TORO Product if defective in materials or workmanship. The following time periods from the date of purchase apply:

Commercial Products ..... 1 Year

The cost of parts, labor and transportation are included.

If you feel your TORO Product is defective and wish to rely on The Toro Promise, the following procedure is recommended:

1. Contact your Authorized TORO Distributor or Commercial Dealer (the Yellow Pages of your telephone directory is a good reference source).

2. The TORO Distributor or Commercial Dealer will advise you on the arrangements that can be made to inspect and repair your product.

3. The TORO Distributor or Commercial Dealer will inspect the product and advise you whether the product is defective and, if so, make all repairs necessary to correct the defect without an extra charge to you.

If for any reason you are dissatisfied with the distributor's analysis of the defect or the service performed, you may contact us.

Write:

TORO Commercial Products Service Department
8111 Lyndale Avenue South
Minneapolis, MN 55420–1196

The above remedy of product defects through repair by an Authorized TORO Distributor or Commercial Dealer is the purchaser's sole remedy for any defect.

THERE IS NO OTHER EXPRESS WARRANTY. ALL IMPLIED WARRANTIES OF MERCHANTIBILITY AND FITNESS FOR USE ARE LIMITED TO THE DURATION OF THE EXPRESS WARRANTY.

Some states do not allow limitations on how long an implied warranty lasts, so the above limitation may not apply to you.

This Warranty applies only to parts or components which are defective and does not cover repairs necessary due to normal wear, misuse, accidents, or lack of proper maintenance. Regular, routine maintenance of the unit to keep it in proper operating condition is the responsibility of the owner.

All warranty repairs reimbursable under The Toro Promise must be performed by an Authorized Toro Commercial Dealer or Distributor using Toro approved replacement parts.

Repairs or attempted repairs by anyone other than an Authorized TORO Distributor or Commercial Dealer are not reimbursable under the TORO Promise. In addition, these unauthorized repair attempts may result in additional malfunctions, the correction of which is not covered by warranty.

THE TORO COMPANY IS NOT LIABLE FOR INDIRECT, INCIDENTAL OR CONSEQUENTIAL DAMAGES IN CONNECTION WITH THE USE OF THE PRODUCT INCLUDING ANY COST OR EXPENSE OF PROVIDING SUBSTITUTE EQUIPMENT OR SERVICE DURING PERIODS OF MALFUNCTION OR NON–USE.

Some states do not allow the exclusion of incidental or consequential damages, so the above exclusion may not apply to you.

This warranty gives you specific legal rights, and you may also have other rights which vary from state to state.

COUNTRIES OTHER THAN THE UNITED STATES OR CANADA

Customers who have purchased TORO products exported from the United States or Canada should contact their TORO Distributor (Dealer) to obtain guarantee policies for your country, province, or state. If for any reason you are dissatisfied with your Distributor's service or have difficulty obtaining guarantee information, contact the TORO importer. If all other remedies fail, you may contact us at The Toro Company.

Compliance with Radio Interference Regulations Certified.

Litho in U.S.A.