FORM NO. 3314–167 Rev. F

TORO®

MODEL NO. 03752–00001 thru 90001 & UP
03753–00001 thru 90001 & UP
MODEL NO. 03754–00001 thru 90001 & UP
03756–00001 thru 90001 & UP
MODEL NO. 03741–00001 thru 90001 & UP
03751–00001 thru 90001 & UP

OPERATOR'S MANUAL

5, 7 & 11 BLADE CUTTING UNITS

REELMASTER® 335–D, 3500–D & 4500–D

Since this operator's manual only has information necessary to maintain and operate the cutting units, we suggest you keep this manual with your traction unit operator's manual so that both may be referred to for instructions concerning safe operation and proper maintenance procedures.

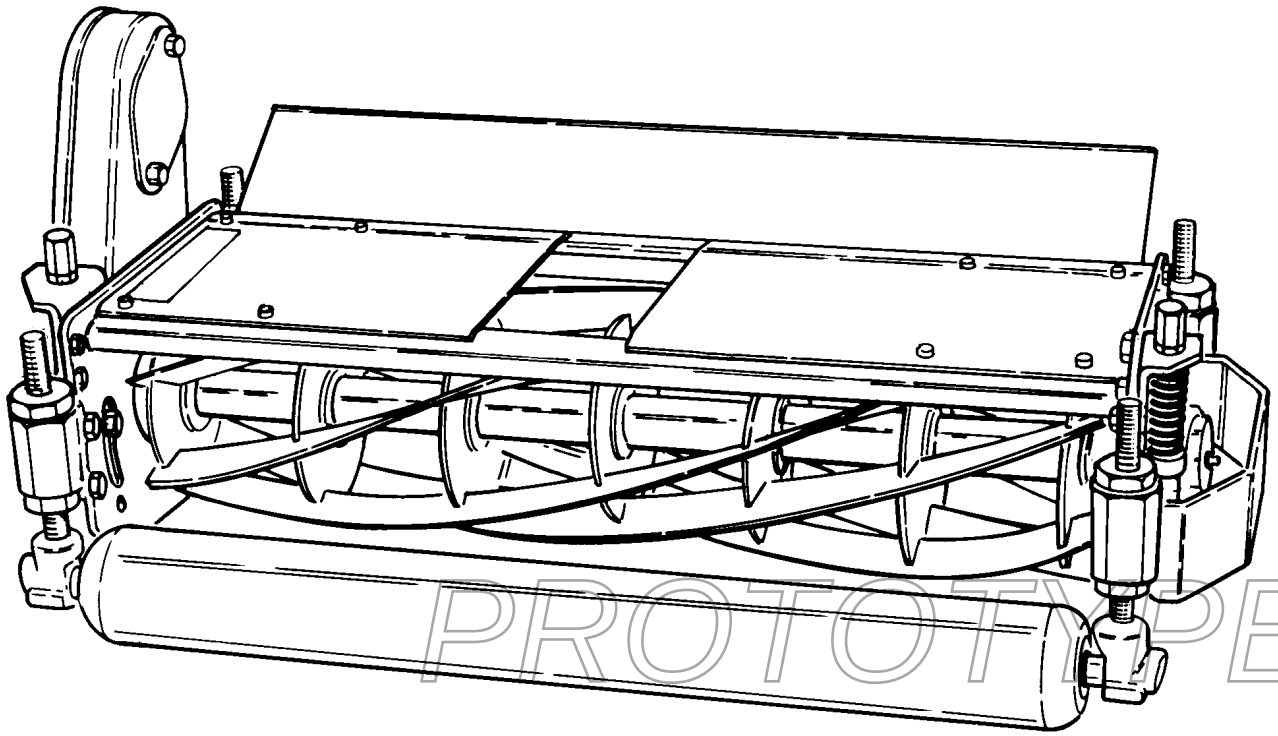

© The TORO COMPANY – 1990, Rev. 1991, 1992, 1993, 1994, 1995, 1999
All Rights Reserved

TPS

FOREWORD

The cutting unit's have advanced concepts in engineering, design and safety; and if maintained properly, they will give excellent service.

Since the cutting unit's are high quality products, Toro is concerned about the future use of them and the safety of the user. Read this manual to familiarize yourself with the proper set up, adjustment and maintenance instructions. The major sections of this manual are:

1. **Set Up Instructions**
2. **Cutting Unit Adjustment**
3. **Maintenance**

Certain information in this manual is emphasized. DANGER, WARNING and CAUTION identify personal safety related information. IMPORTANT identifies mechanical information demanding special attention. Be sure to read the directive because it deals with the possibility of damaging a part or parts of the machine. NOTE identifies general information worthy of special attention.

If help concerning set up, operation, maintenance or safety is ever needed, contact a local Authorized Toro Distributor. In addition to genuine Toro replacement parts, the distributor also has optional equipment from the complete line of Toro turf care equipment. Keep your Toro all Toro — buy genuine Toro replacement parts and accessories.

Whenever you have questions or need service, contact your local authorized Toro Distributor. In addition to having a complete line of accessories and professional turf care service technicians, the distributor has a complete line of genuine TORO replacement parts to keep your machine operating properly. Keep your TORO all TORO. Buy genuine TORO parts and accessories.

TABLE OF CONTENTS

SAFETY AND INSTRUCTION DECALS 3
SPECIFICATIONS 3
KNOW YOUR CUTTING UNIT 4
LOOSE PARTS CHART 4
PARTS REQUIRED TO MOUNT CUTTING UNIT . 4
SET−UP INSTRUCTIONS 5
Mount Tipper Brackets 5
Installing Floatation Kit 6
Installing Fixed Head Kit 6
Securing Cutting Units To Lift Arms 6
Mounting Hydraulic Motors To Cutting Units 7
CUTTING UNIT ADJUSTMENT 9
Adjusting Reel To Bedknife Contact 9
Height−of−Cut Adjustment − Floating Cutting Unit 9
Quick Method For Changing Height−of−cut . 11
Height−of−Cut Adjustment − Fixed Cutting Unit 11
Adjusting Skids And Front Roller (Fixed Head) 11
LUBRICATION 12
MAINTENANCE 13
Backlapping 13
Servicing The Bedknife/Bedbar 14
Servicing The Reel 14
Removing The Roller 16
Installing The Roller 17
PRODUCT IDENTIFICATION 17
MAINTENANCE RECORD 18
THE TORO PROMISE . . . . . Back Cover

PROTOTYPE

SAFETY AND INSTRUCTION DECALS

The following safety and instruction decals are affixed to the cutting unit. If any decal becomes illegible or damaged, install a new decal. Part numbers are listed below and in your Parts Catalog.



ON TOP COVER
(Part No. 76−8760)

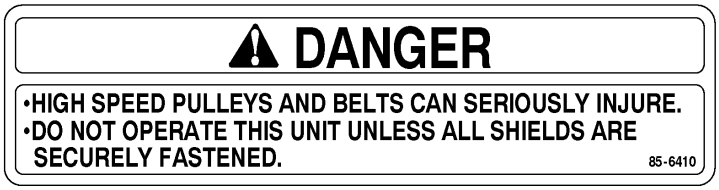

ON TOP COVER
(Part No. 85−6410)

SPECIFICATIONS

Construction: Welded steel frame and reel with heavy duty, self−aligning ball bearings. Heavy duty steel rear roller with tapered roller bearings. Rear roller and bedbar are isolated and mounted in rubber bushings for quiet, vibration−free operation. Adjustable deflector shields are standard. Stainless steel components are used at key points for added durability.

Reel Configuration: The 5, 7 and 11 blade heavy duty welded reels all have 8 in. (20.3 cm) diameters and are 29−3/4 in. (75.5 cm) wide.

Bedknife/Bedbar Assembly: A replaceable, single edged, alloy steel bedbar is induction hardened. It's fastened with steel screws to a precision ground surface on the high strength, fabricated steel bedbar. The stress−relieved machined bedbar is mounted with four (4) vibration isolation bushings.

Bedknife to Reel Adjustment: Two lockable lead screw adjusters at each side of the frame adjust the reel to bedknife contact.

Rear Roller: 3−1/2 in. (89 mm) diameter steel roller has greaseable tapered roller bearings. A double lip oil seal and wear sleeve isolates grit and moisture from the bearings.

Height−of−Cut:
5 Blade−1 to 3 in. (25 to 76 mm).
7 Blade−1/2 to 1−3/4 in. (9.5 to 45 mm).
11 Blade−3/8 to 3/4 in. (9.5 to 19 mm).

Height−of−Cut Adjustment: Quick adjustment and positive locking is provided by locking type cone nuts. Gauge marks of 1/4 in. (6.3 mm) are provided as a reference for easy changes of height−of−cut.

Lubrication: Easily accessible grease fittings for bearings and all major pivot points.

Drive: The reel drive motor turns a maintenance−free cog belt which drives the reel. Drive pulley and cog belt are encased in a drive housing for safety and protection from contamination.

Grass Deflector Shields: Fully Adjustable.

Clip (variable to match cutting conditions):

5 Blade Cutting Unit:.176 in. per mph
(.352 in. at 2 mph −1.32 in. at 7.5 mph)

7 Blade Cutting Unit :126 in. per mph
(.252 in. at 2 mph − .945 in. at 7.5 mph)

11 Blade Cutting Unit: .080 in. per mph
(.16 in. at 2mph −.600 in. at 7.5mph)

Optional Accessories:

Floatation Kit− Model No. 03640 (1 per machine).

Fixed Head Kit − Model No. 03642 (1 per machine.).

Wiehle Roller Kit − Model No. 03644 (1 per machine).

Side Skid Kit − Model No. 03650 (1 per machine).

Sectional Roller Kit − Model No. 03648 (1 per machine)

Full Roller Kit − Model No. 03646 (1 per machine.).

Dethatching Unit, RH − Model No. 03732
(2 per machine).

Dethatching Unit, LH − Model No. 03730
(1 per machine).

Rear Roller Scraper Kit − Part No. 59−6090
(1 per cutting unit).

Front Roller Scraper Kit − Part No. 62−6220
(1 per cutting unit).

Dethatcher Tipper Bracket, #1 Center −
Part No. 77−4220

NOTE: The front roller or other optional accessories for the front of the cutting unit, are shipped separately. Use the instructions and parts supplied with the selected options for installation on the cutting unit.

PROTOTYPE

KNOW YOUR CUTTING UNIT

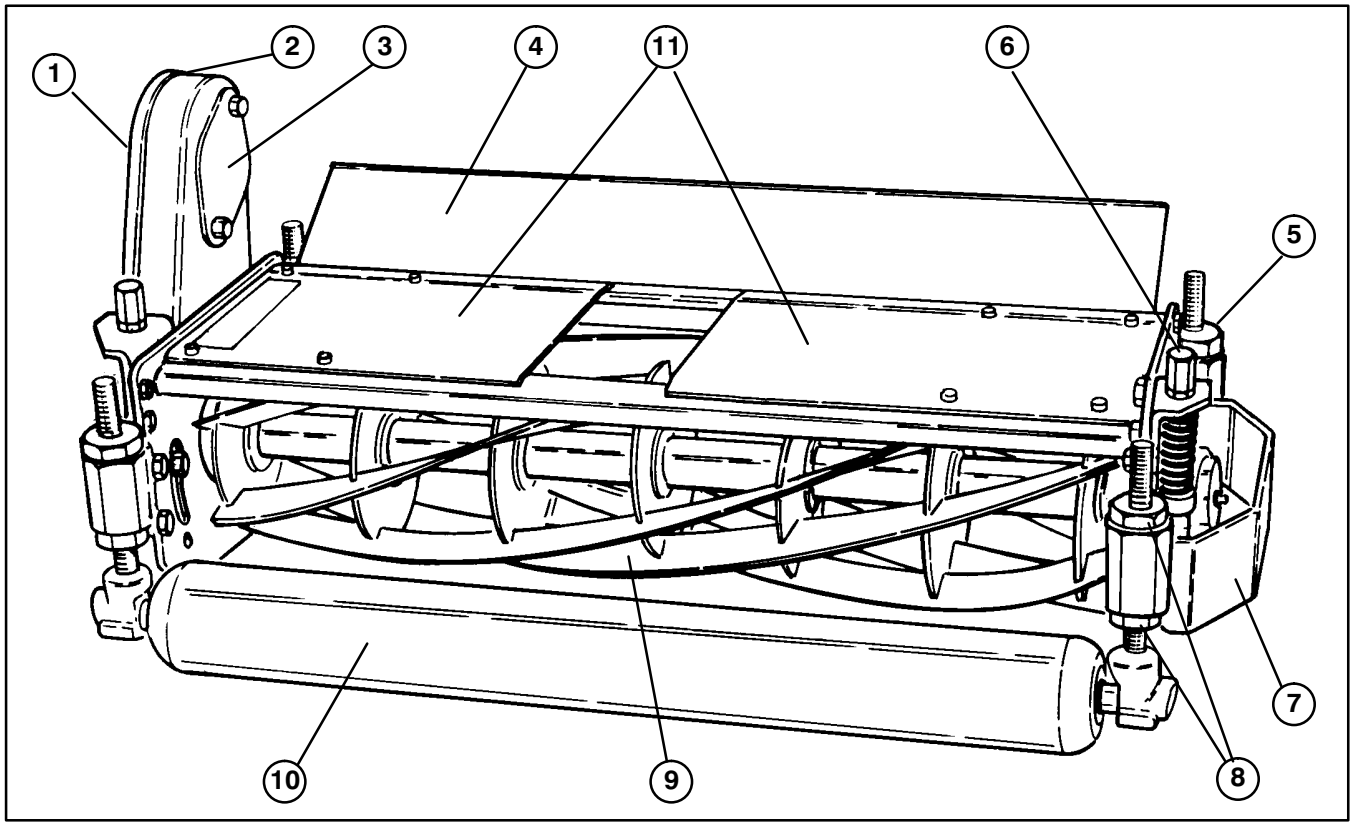

Figure 1

1. **Drive housing cover**
2. **Drive housing**
3. **Drive plate shield & shipping cover**
4. **Grass deflector**
5. **Rear roller adjuster (2)**
6. **Reel to bedknife adjuster**
7. **Guard**
8. **Cone nut**
9. **Reel assembly**
10. **Front roller (optional)**
11. **Top covers**

LOOSE PARTS

NOTE: Use this chart as a checklist to assure all parts have been received. Without these parts, total set–up cannot be completed.

DESCRIPTION	QTY.	USE
Operator's Manual	1	
Registration Card	1	Fill out and return to Toro

PROTOTYPE

PARTS REQUIRED TO MOUNT CUTTING UNITS

2–Right Hand Cutting Units

1–Left Hand Cutting Unit

1–Front Roller or Skid Kit

1–Flotation Kit or

1–Fixed Head Kit

SET−UP INSTRUCTIONS

IMPORTANT: Thoroughly read both Cutting Unit and Traction Unit Operator Manuals. Failure to do so may result in damage to the cutting unit and/or poor performance.

Note: Reference to the left and right side of the cutting unit is made from the operators perspective as if the operator were seated on the machine and the unit was in normal operation.

CAUTION

Before installing, servicing or making adjustments to the cutting units, stop traction unit engine and remove key from the switch.

MOUNT TIPPER BRACKETS

1. Position cutting units on floor in front of machine as shown in figure 2. The center cutting unit (#1 position) and the one on the right (#3 position) are right hand cutting units and are the same. The one on the left (#2 position) is a left hand cutting unit.

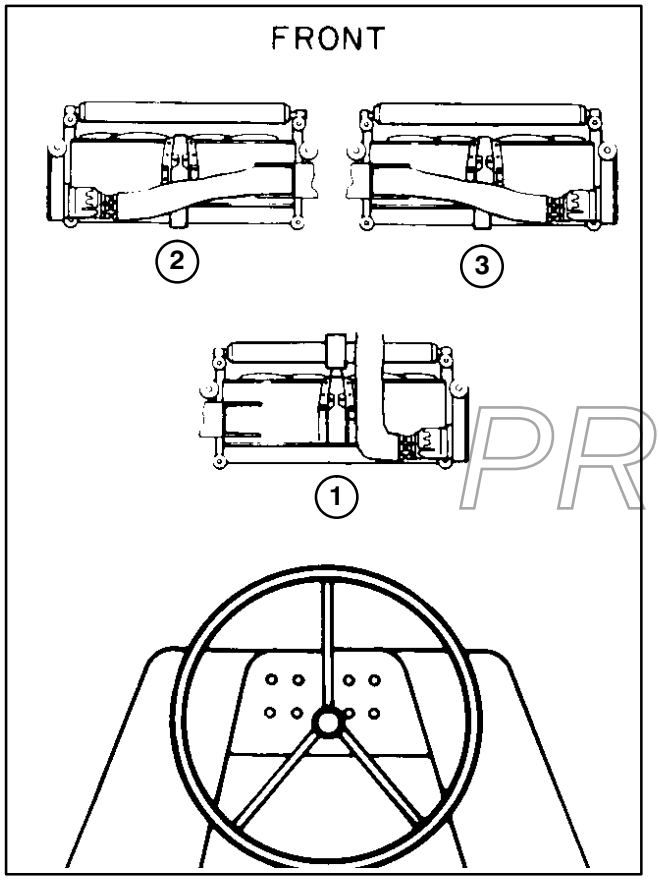

Figure 2
Cutting Unit Layout

2. Install a front roller or a skid kit to each cutting unit, using instructions included with each kit.

3. On the #2 and #3 cutting units, remove (4) cover capscrews located at the outside end of the cutting unit drive housing Discard cover screws. Mount a tipper bracket to each cutting unit with (4) capscrews and locknuts. A spacer must also be installed under front of each tipper bracket if cutting unit is to be equipped with fixed head mounting kits (Fig. 3).

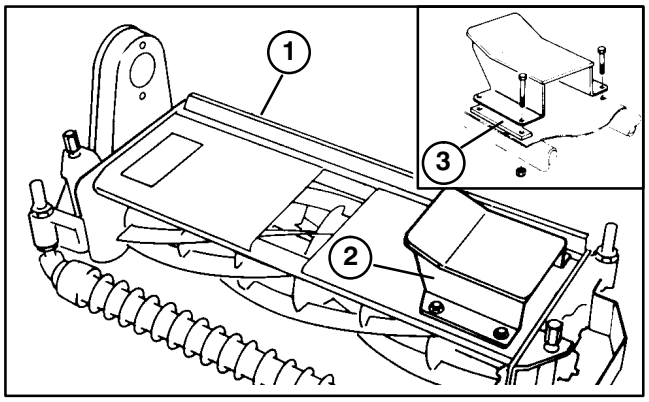

Figure 3
1. **#3 Cutting unit**
2. **Tipper bracket**
3. **Spacer (used with fixed head only)**

Note: The overall width of cut can be increased by reversing covers on #2 and #3 cutting units. Longer cover to be mounted on drive end of cutting unit. Also, a weight (Toro Part No. 62−6060) must be mounted to guard at opposite end of cutting unit drive with (2) 1/2−13 x 1−1/2" lg. carriage bolts (Part No. 3233−25) and locknuts (3296−45) (Fig. 4).

PROTOTYPE

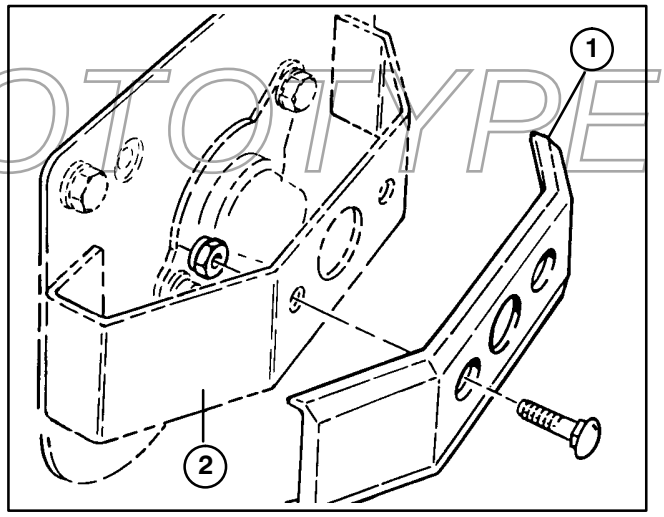

Figure 4
1. **Weight**
2. **Guard**

SET–UP INSTRUCTIONS

INSTALLING FLOATATION KIT

Mount a Flotation Kit Assembly (Fig. 5) to each cutting unit with ''U" bolts, lockwashers and nuts supplied with kits. Male end of floatation assembly to be positioned forward on the #1 cutting unit and to the rear on #2 and #3 cutting units. Tighten ''U" bolts evenly.

CAUTION

Keep fingers away from floatation U–joint to prevent pinching.

Note: When installing floating head assembly to cutting unit, make sure flap on bottom of assembly is positioned to the inside of the cutting frame tubes (Fig. 5, inset).

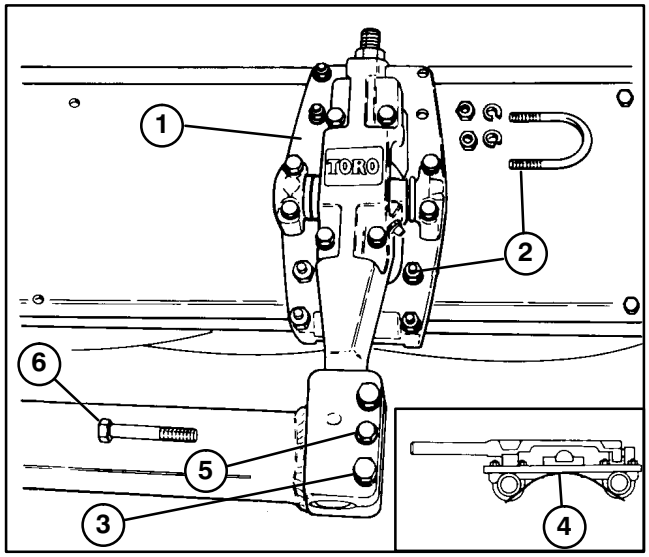

Figure 5

1. Flotation kit assembly
2. U–bolts
3. Lift arm bolts
4. Flap
5. Capscrew & jam nut
6. Capscrew

INSTALLING FIXED HEAD KIT

Note: Before mounting each fixed head assembly to cutting unit, insert the pivot arm of assembly into the appropriate lift arm block, align mounting holes and determine how many thrust washers (if any) are required to fill gap between assembly body and lift arm block. Add required amount of washers to pivot arm before installing fixed head assembly to lift arm.

Mount a Fixed Head Kit Assembly (Fig. 6) to each cutting unit with a cover plate, attitude adjustment plate, ''U'' bolts, lockwashers and nuts supplied with kits. Male end of floatation assembly to be positioned forward on the #1 cutting unit and to the rear on #2 and #3 cutting units. Tighten "U'' bolts evenly.

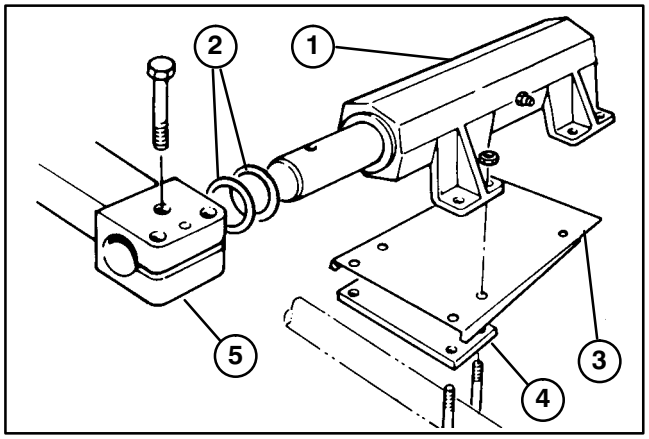

Figure 6

1. Fixed head assembly
2. Thrust washer (as required)
3. Cover plate
4. Attitude adjustment plate
5. Lift arm

Note: Attitude adjustment plate to be mounted on front tube of cutting unit.

SECURING CUTTING UNITS TO LIFT ARMS

1. Remove capscrews and locknuts securing cutting unit drive motors to shipping brackets (Fig. 7 & 8).

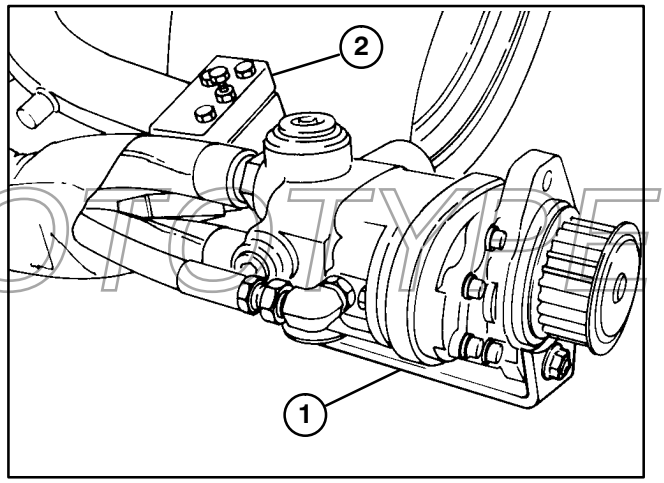

Figure 7

1. Shipping bracket
2. Lift arm

2. On #2 and #3 lift arms, remove (2) capscrews securing shipping bracket to lift arm. Reinstall capscrew, with full thread, and jam nut. Tighten capscrew to spread slotted lift arm. Tighten jam nut.

PROTOTYPE

SET–UP INSTRUCTIONS

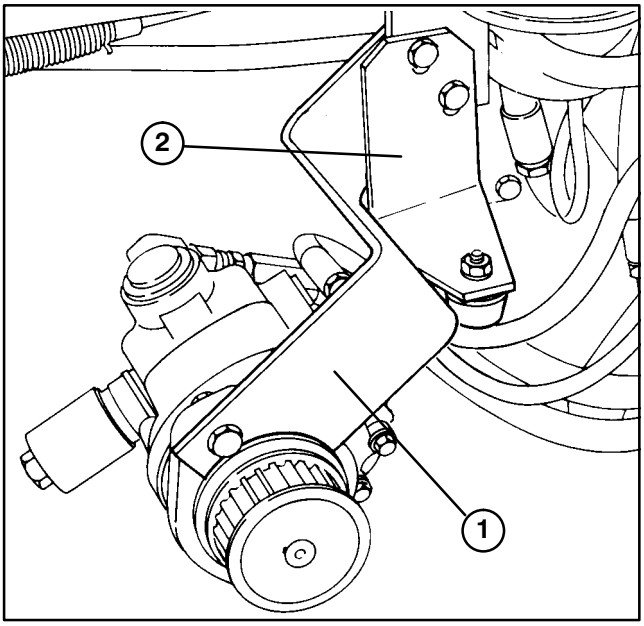

Figure 8

1. Shipping bracket
2. Bumper bracket
3. Mounting capscrews

3. Remove (2) capscrews and flange nuts securing shipping bracket and bumper bracket to right side of frame (Fig. 8). Remove shipping bracket and reinstall bumper bracket to frame (Fig. 9).

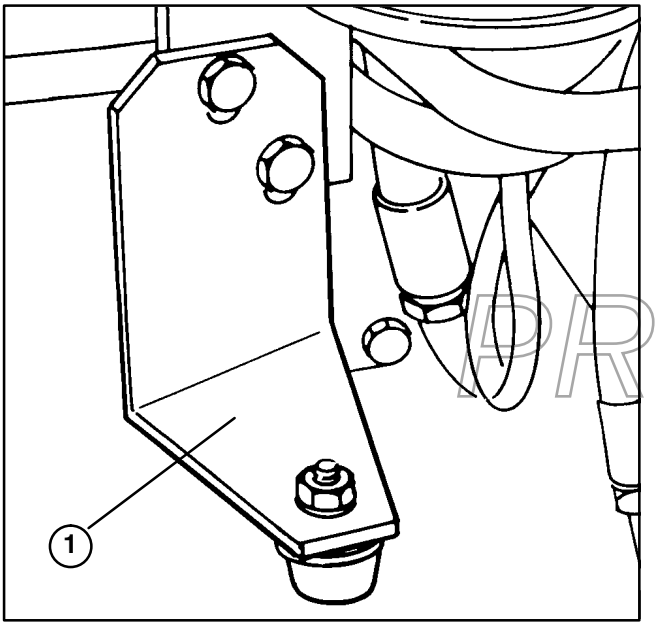

Figure 9

1. Bumper bracket

4. Install appropriate cutting unit to lift arm and match the male end of pivot arm with hole in lift arm. Reinstall (3) lift arm screws, loosen jam nut on remaining screw to secure cutting unit. Tighten jam nut (Fig. 5 & 6).

MOUNTING HYDRAULIC MOTORS TO CUTTING UNITS

1. Remove locknuts, bolts, shipping cover and drive plate shield (Fig. 10) from the cutting unit.

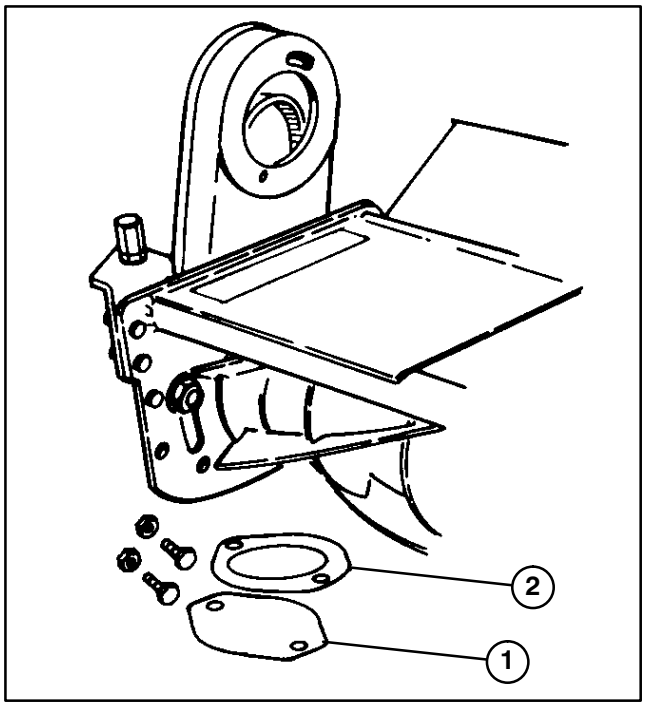

Figure 10

1. Shipping cover
2. Drive plate shield

2. Discard shipping cover and install the drive plate shield onto the reel drive motor flange (Fig. 11). Be sure the widest portion of the shield is at the top.

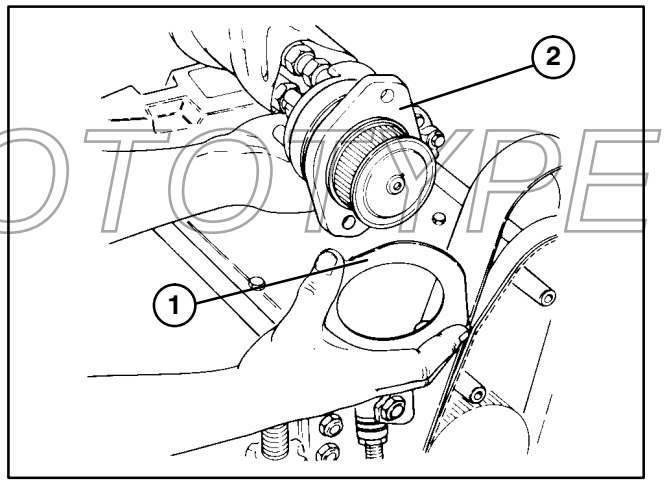

Figure 11

1. Drive plate shield
2. Reel drive motor flange

Note: Check to see that motor pulley set screws are tight on motor shaft before installing motor onto cutting unit (Fig. 12).

PROTOTYPE

SET–UP INSTRUCTIONS

3. Insert the reel drive motor pulley through the housing and slip the cutting unit drive belt over the pulley (Fig. 12)).

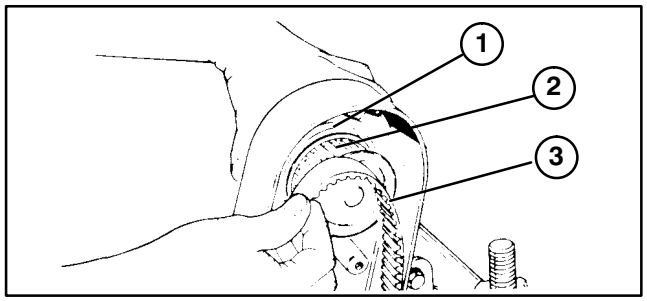

Figure 12

1. **Hydraulic motor**
2. **Motor pulley**
3. **Drive belt**

4. Insert the two (2) reel drive motor mounting bolts (heads on inside of the drive housing – flatwasher on top bolt) through the reel motor flange holes. Thread the locknuts onto the bolts. Rotate reel motor upward in the slotted hole in the housing to tension the drive belt and tighten the fasteners (Fig. 13) to approx. 25 ft. lbs. (34 N - m).

Note: Proper belt tension is achieved when belt deflects approximately 1/8" (3 mm) at mid–point when 7 lbs. of force is applied. (Fig. 13).

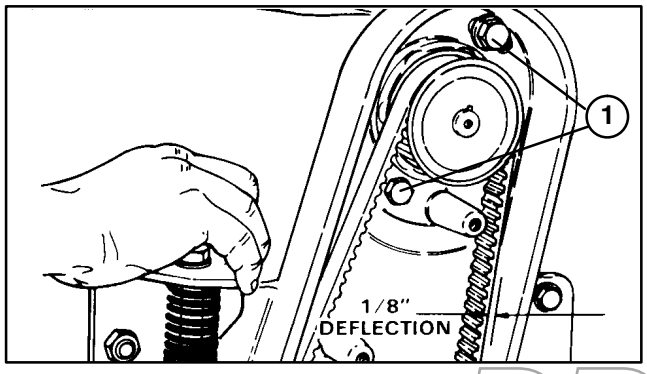

Figure 13

1. **Reel motor fasteners**

IMPORTANT: Rotate motors by hand only. Never place a bar between hose fittings on hydraulic motors–motor damage may result.

5. Install the gasket and drive housing cover after making sure the ends of the gasket are at the bottom of the housing to allow for drainage.

IMPORTANT: When hydraulic motors have been mounted to the cutting units make sure hydraulic hoses lay flat and do not contact the frame of the machine when the cutting units are in the raised position. There should also be sufficient slack so hoses are above and not in contact with the floatation kit. If hoses appear twisted once the hydraulic motors have been mounted and the belts tightened, loosen swivel nuts at the motor and reposition hoses. This can greatly increase the life of the hoses. With cutting units down, all cutting unit hoses should have a flat natural lay and be free from twist.

6. Using one of the rear ''U'' bolts and nuts securing mounting kits to cutting units #2 and #3, mount a hose bracket to each cutting unit as shown in fig. 14.

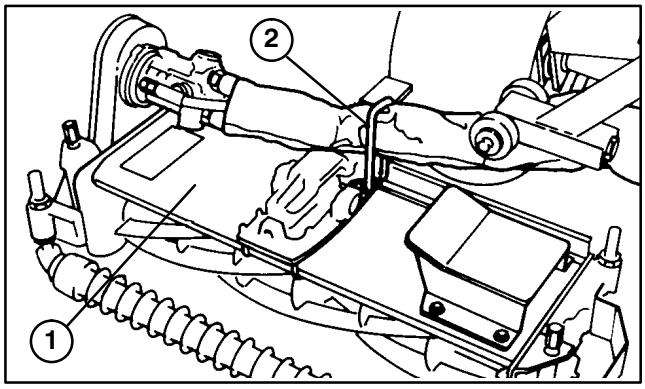

Figure 14

1. **#3 Cutting unit**
2. **Hose bracket**

Note: Refer to the Traction Unit Operator's Manual for instructions on setting the adjustable hydraulic counterbalance, if so equipped .

PROTOTYPE

CUTTING UNIT ADJUSTMENT

CAUTION

Before adjusting reel to bedknife, raise and fully latch cutting units. Remove key from the ignition switch. Keep others off machine while adjusting cutting units.

ADJUSTING REEL TO BEDKNIFE CONTACT

Before adjusting height−of−cut and each day before operating, check reel to bedknife contact, regardless if quality of cut had previously been acceptable.

Note: A 3/4" wrench is required for making the reel to bedknife adjustment.

A. Slowly and carefully rotate reel, listening for light contact across the full length of the reel and bedknife.

B. If no contact−loosen the adjuster locking nut on each adjuster (Fig. 15). Then, equally turn each adjuster knob clockwise until light contact is felt and heard.

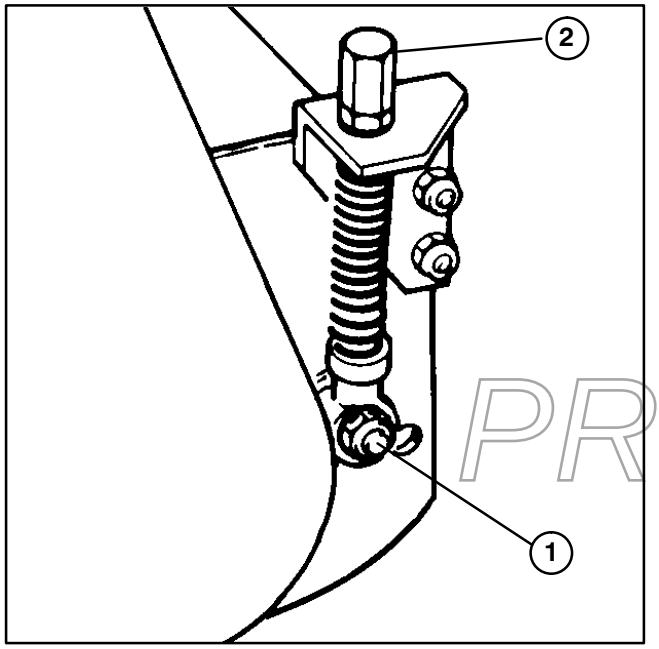

Figure 15

1. **Adjuster locking nut**
2. **Adjustment knob**

C. If excessive contact −Turn the adjusting knobs counter−clockwise until no contact is noticed. Then equally turn both adjusting knobs clockwise, until light contact is felt and heard between the reel and bedknife. Final adjustment should always be in the tightening (clockwise) direction.

D. Tighten adjuster locking nuts when completed making adjustments.

CAUTION

When adjusting the cutting units, wear heavy gloves and use care when turning reels by hand. Sharp edges can cut or pinch hands or fingers.

IMPORTANT: Adjusted correctly, the reel will cut paper (approx. .03" thick) across its entire length.

The cutting units will provide optimum mowing performance when adjusted and maintained correctly. Keeping a precise reel to bedknife adjustment (light contact), at each end of the cutting unit will produce a continual self−sharpening action. Therefore, sharp cutting edges are maintained, good quality of cut assured, and the need for corrective re−sharpening reduced.

IMPORTANT: Cutting units with excessive contact between the reel and bedknife are noisy, consume excessive power, shorten component life and result in overall poor performance. Light contact between the reel and bedknife, once the cutting unit is warmed up, provides optimum mowing performance and component life.

HEIGHT−OF−CUT ADJUSTMENT FOR A FLOATING CUTTING UNIT

Overview of Procedure:

STEP 1 − Adjust reel to bedknife contact

STEP 2 − Level rear roller to reel

STEP 3 − Final height−of−cut adjustment using gauge bar.

PROTOTYPE

STEP 1 − Adjust Reel to Bedknife Contact

A. Adjust reel to bedknife contact on all cutting units. Refer to ADJUSTING REEL TO BEDKNIFE CONTACT.

STEP 2 − Level Rear Roller to Reel

B. Start engine and lower the cutting units onto a flat surface such as a piece of 3/4" or 1" plywood (at least 20" x 30" in size). Stop engine and remove key from switch. Lock cutting units in the fixed position, by loosening the jam nut on lockout pin (Fig. 16) and screwing pin into hole in pivot arm (Fig. 17). Tighten nut to secure lockout. Raise the front rollers up so they do not contact the flat surface.

CUTTING UNIT ADJUSTMENT

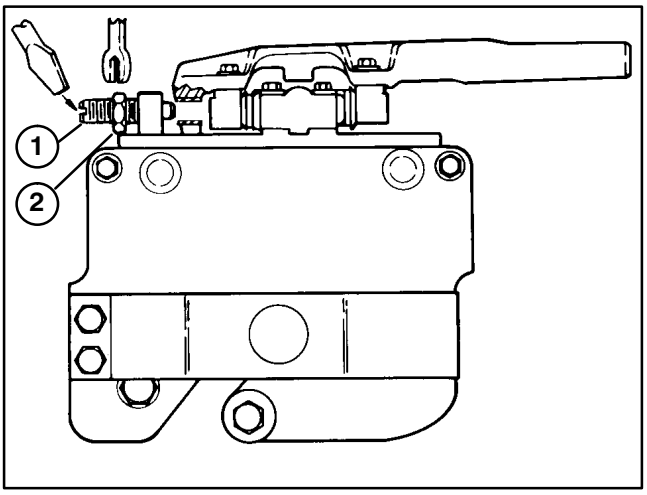

Figure 16
Cutting Unit Float Position

1. Lockout pin
2. Jam nut

C. Insert a piece of bar stock 25" – 28" (70 cm) long (Fig. 18), and approximately 1/8" (3 mm) thicker than the desired height−of−cut, under the reel and up against the bedknife cutting edge (Fig. 18). The reel (not bedknife) must contact the bar stock along its full length.

Note: Using a bar 1/8" (3 mm) thicker than height−of−cut provides proper bedknife attitude (heeled ''up" inback) required for excellent low height−of−cut performance.

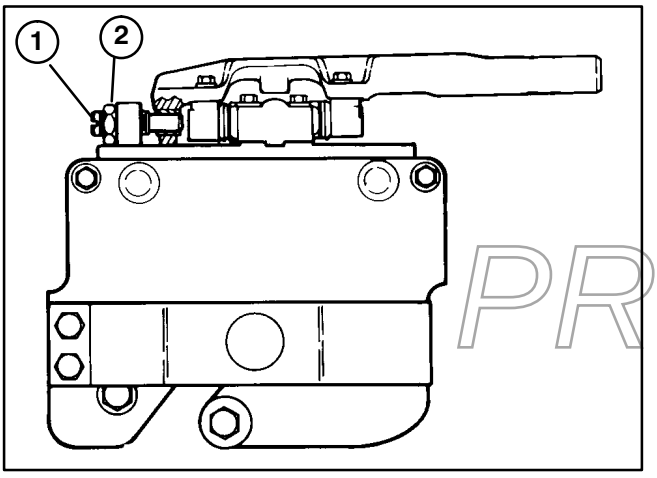

Figure 17
Cutting Unit Fixed Position

1. Lockout pin
2. Jam nut

D. Loosen rear roller jam nuts and adjusting knobs and push roller down against flat surface. At this point the reel should be contacting the bar stock and the rear roller contacting the flat surface. Contact should exist along the entire length of the reel and rear roller. Tighten rear roller adjustment knobs and jam nuts. Recheck to be sure roller and reel are both still making contact after the jam nuts have been tightened. Check roller contact by trying to slide paper between the roller and the flat surface.

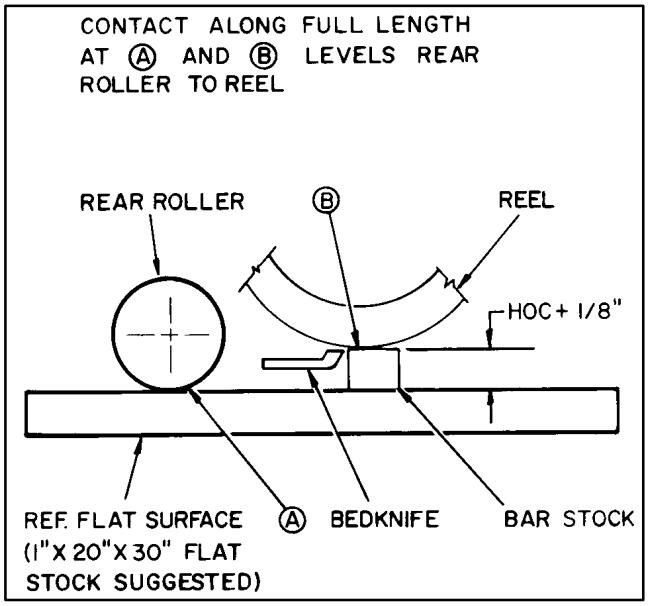

Figure 18
Leveling Rear Roller to Reel

E. Rear roller is now leveled to the reel.

STEP 3 – Final Height−of−Cut Adjustment Using Gauge Bar

F. Raise cutting units and lock in the transport position. Shut off the engine and remove the key.

G. Use gauge bar (Toro Part No. 59−7900) to set final height−of−cut by adjusting front roller only.

H. Loosen the gauge bar jam nut and adjust the screw to set dimension between underside of screw head and gauge bar for desired height−of−cut. (Fig. 19). Tighten the jam nut to secure the adjustment. Hook screw head over cutting edge of bedknife and position bar against bottom of front roller (Fig. 20).

PROTOTYPE

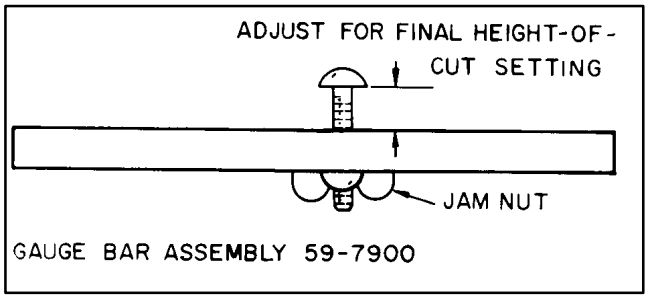

Figure 19
Gauge Bar Assembly

CUTTING UNIT ADJUSTMENT

I. Loosen front roller nuts and adjust both ends of the front roller until it contacts gauge bar at both ends. With the gauge bar held firmly against the bottom of the rollers adjust the front roller so the screw head just slips over the lip of the bedknife (Fig. 20). Tighten front roller nuts.

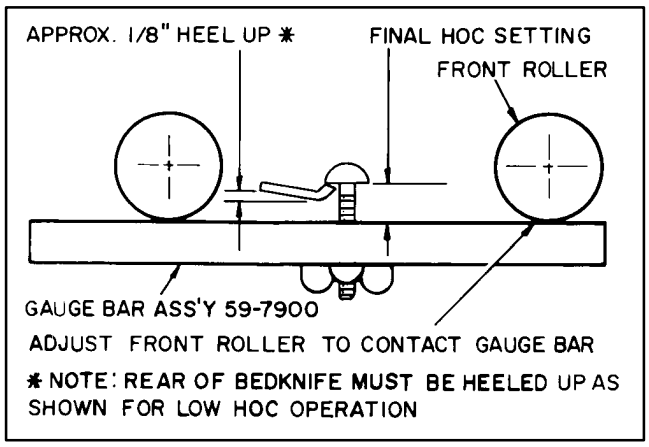

Figure 20
Final Height−of−Cut Adjustment Using Gauge Bar

IMPORTANT: Set properly, front and rear rollers will contact gauge bar and screw head will be snug over bedknife cutting edge when checked at both ends of the reel.

J. Loosen lockout pin so cutting unit can float freely (Fig. 16).

QUICK METHOD FOR CHANGING HEIGHT−OF−CUT AFTER INITIAL SET UP OF A FLOATING CUTTING UNIT

If the reel to bedknife adjustment has been set (Step 1) and the rear roller leveled to the reel (Step 2) the cutting unit may be quickly changed from one height−of−cut to another by using the gauge bar (Part #59−7900) and adjusting the front roller only. In many cases, an entire machine can be done quickly by using the gauge bar to set the front roller of one cutting unit. The remaining cutting units can then be set by loosening their front roller jam nuts and turning each front roller adjustment knob the same number of turns and in the same direction as the first unit.

HEIGHT−OF−CUT ADJUSTMENT FOR A FIXED CUTTING UNIT

A. Adjust reel to bedknife contact.

B. Loosen nuts securing skids or front roller and raise to highest position.

C. Loosen jam nuts securing rear roller. Lower roller beyond desired height−of−cut (assures proper bedknife attitude).

D. Lower cutting unit onto a flat surface, such as a 1" x 20" x 30" piece of plywood. Shut off engine and remove the key.

E. Insert piece of bar stock (Fig. 18) 25"−28" (70 cm) long with thickness equal to desired height−of−cut, under entire length of the reel, next to bedknife.

F. Adjust rear roller adjustment knobs and jam nuts until full length of the rear roller contacts the flat surface and the full length of the reel (not bedknife) contacts the bar stock. Tighten rear roller knobs and jam nuts.

ADJUSTING SKIDS AND FRONT ROLLER (Fixed Head Kit)

After skid kit or front rollers are installed (installation instructions are included with each option) make the following adjustments to prevent them from pushing down uncut grass or scalping on undulating terrain:

1. Lock each cutting unit in the fixed position (Refer to Cutting Unit Orientation, Fig. 15). Set the reel to bedknife adjustment and height−of−cut adjustment.

2. Position the cutting units on a flat, level surface (1 " (25 mm) thick piece of plywood).

3. Skids and front rollers used to prevent scalping should not ride on the ground. Adjust each skid or front roller so it is 1/8 − 1/4 in. (3−6 mm) or higher above the level surface. Allow greater clearance at the higher height−of−cut settings.

PROTOTYPE

4. Proper adjustment is achieved when the cutting unit does not scalp the grass in normal mowing conditions and yet is set high enough not to mar the turf and create undue wear on the skids or rollers.

Note: Skids are used only with the cutting unit in the fixed position. Front rollers may be used with the cutting unit in either the fixed or floating position.

LUBRICATION

Before and after greasing, wipe each grease fitting with a clean rag. Use a hand−operated grease gun and #2 general purpose grease to lubricate the eight grease fittings. Applying too much pressure will ruin the seals and leaking grease could cause damage to grass.

IMPORTANT: Before washing the machine, shut off the engine and remove the key. Toro recommends daily lubrication of reels and rollers immediately after washing the machine. This helps to minimize water entering the reel and roller bearings.

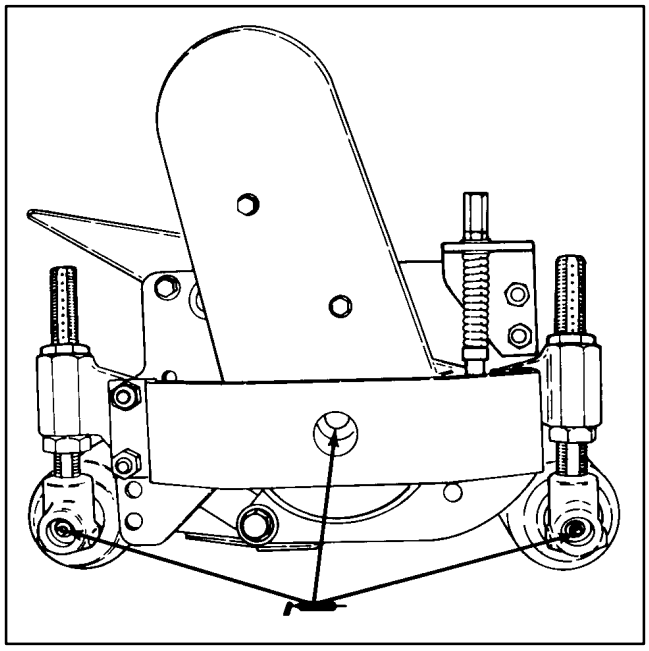

Figure 21

If the cutting units are washed in the raised position be sure to lower them to the ground after washing. This allows water to drain from the ends of the rollers and reel bearing housings.

1. Reel shaft and Roller Bearings − Lubricate bearings with 3 or 4 pumps of grease. Daily lubrication of these fittings purges water and other contaminants, increasing service life and maintaining excellent quality−of−cut.

Note: When greasing roller bearings−grease forced from bearings will not be visible around the roller shaft.

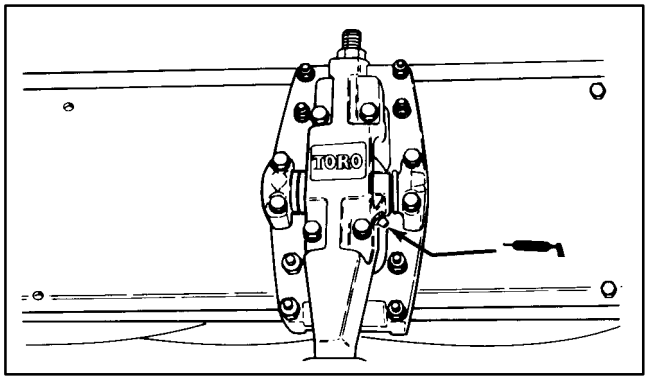

Figure 22

2. Floatation Kit Pivots and Fixed Head Kit Pivots − Lubricate with one pump of grease weekly.

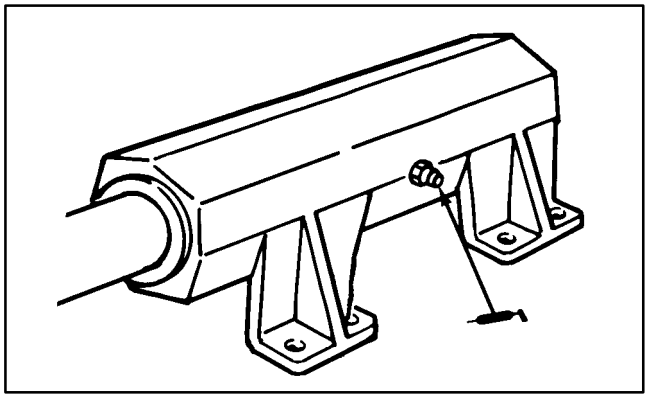

Figure 23

PROTOTYPE

MAINTENANCE

BACKLAPPING

DANGER

DURING BACKLAP OPERATION REELS ARE UNDER POWER. CONTACT WITH ROTATING REELS CAN RESULT IN PERSONAL INJURY. DO NOT ADJUST CUTTING UNITS WHILE ENGINE AND REELS ARE OPERATING. INSTRUCT OPERATOR TO STOP THE REELS AND SHUT THE ENGINE OFF WHEN ADJUSTMENT IS NECESSARY.

Use a good grade of medium grit (80 courseness) lapping compound with a water soluble carrier so the compound will be easily washed away after completion of the operation. Dry lapping compound should be mixed with liquid detergent until it has a free−flowing consistency.

Two people are required to perform backlapping. Good communication between one another is necessary and caution should be used when making each move. With one person on the seat to operate the controls (operator) the other performs the backlapping operation. Note: Before starting the engine raise the grass deflector on the #1 cutting unit (center) and tighten fasteners to retain the deflector in the raised position .

1st persons duties (Operator)−

A. Sit on the seat, move axle shift lever rearward to low (mow) position, and engage parking brake.

B. Start the engine and run at minimum throttle. Lower either:
1.) center cutting unit (#1) or
2.) left hand (#2) cutting unit or
3.) right hand (#3) cutting unit.

With the #2 & # 3 cutting units up and latched (automatically shut off) and the #1 cutting unit down, backlap the center (#1) cutting unit from the rear of the machine with the long handled brush. Backlap the #2 and #3 cutting units from the front of the machine.

C. Wait for 2nd person's instruction to engage reels in BACKLAP mode, then pull up on reel switch and move it to ENGAGE position.

D. Turn REEL SPEED KNOB counterclockwise to the BACKLAP position.

E. Follow 2nd person's instructions. Be prepared to stop reels and engine quickly in case of an emergency.

2nd persons duties−

A. Instruct operator when to start and stop reels.

DANGER

UNDER NO CIRCUMSTANCES USE A SHORT−HANDLED PAINT BRUSH TO APPLY BACKLAPPING COMPOUND. A ROTATING REEL CAN ACTUALLY PULL A SHORT HANDLED PAINT BRUSH AND THE USERS HAND IN TO THE REEL CAUSING SERIOUS PERSONAL INJURY.

B. Dip 3 in. (76 mm) paint brush attached to Toro Part No. 29−9200 Handle Assembly into lapping compound. Stand clear and instruct operator to engage reel into backlap mode.

C. Apply lapping compound evenly over full length of the reel, assuring that all reel blades are covered. Whenever noise of reel against the bedknife begins to disappear or, an uneven concentration of material appears on the reel, redistribute the compound with the brush.

D. When it becomes necessary to adjust the reel to the bedknife, instruct the operator to disengage the reel, stop the engine and remove the key from the ignition switch. Then proceed with the adjustment only after the reels have stopped rotating.

E. Backlap each reel until the cutting edges are sharp, even, and consistent on all blades. Achieve a minimum of 1/32 in. (0.79 mm) land area on newly sharpened reel assemblies. Normally, a reel need only be backlapped for approximately 3 minutes.

F. Upon completion, stop the reel and turn off the engine. Remove the key from the ignition switch. Wash the unit thoroughly with a low pressure stream of water to remove all lapping material. Allow the reel to dry and lubricate the grease fittings.

G. Check sharpness of the reel and bedknife with strips of newspaper. With light reel to bedknife contact, the paper should be cleanly sheared across the entire width of the reel. If the paper is not sheared acceptably, continue backlapping .

H. After backlapping the first cutting unit, raise and latch this unit and proceed with the #2 and #3 cutting units.

Note: See the Toro Sharpening Manual (Part #80−300) for additional backlapping/sharpening information.

PROTOTYPE

MAINTENANCE

SERVICING THE BEDKNIFE/BEDBAR

Note: The bedbar on each cutting unit has a precision ground mounting surface to provide an excellent fit with a bedknife. Backlapping of replacement bedknives is often sufficient to achieve an excellent cutting edge with minimum material removed.

BEDKNIFE/BEDBAR REMOVAL:

1. Remove the shoulder bolts, bushings and spacers from each end of the unit and remove the bedbar/bedknife assembly (Fig. 24).

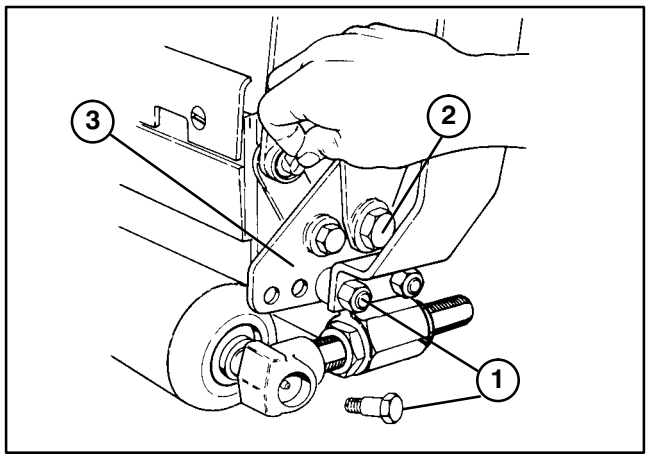

Figure 24

1. **Shoulder bolts (2 ea. side)**
2. **Bushing**
3. **Spacer**

2. Remove the mounting screws for the bedknife and separate the bedknife from the bar (Fig. 25). Discard the screws.

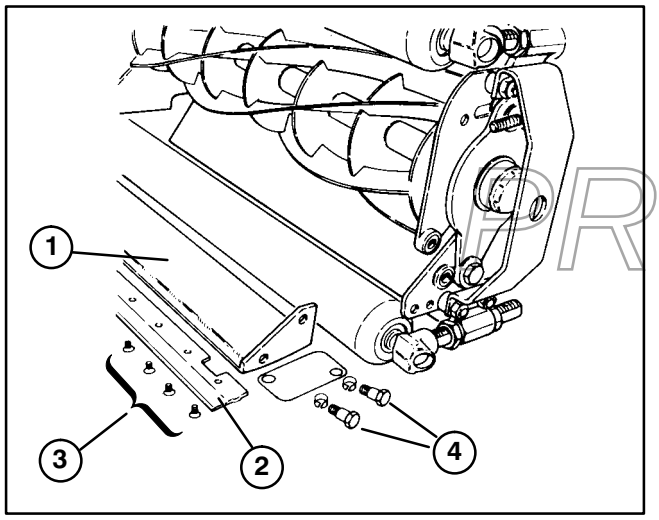

Figure 25

1. **Bedbar**
2. **Bedknife**
3. **Bedknife mounting screws**
4. **Bedknife mounting components**

ASSEMBLY:

1. Thoroughly clean the bedknife mounting face on the bedbar of all rust and scale. Remove any material on the mounting face of the bedbar that will affect a good match−up with the bedknife.

2. Before installation, apply a coating of "Never Seez", or any material that will ease future disassembly of the bedknife mounting screws to the threads before installation.

3. Use a torque wrench and Part No. 51−0880 special tool to finish tightening the screws (Fig. 25). Torque the screws to 250 in.−lb (28 Kgm) beginning with the center screw and tightening alternate screws toward each end to insure the bedknife will be flat against the bedbar.

4. Install the bedbar/bedknife assembly to the cutting unit.

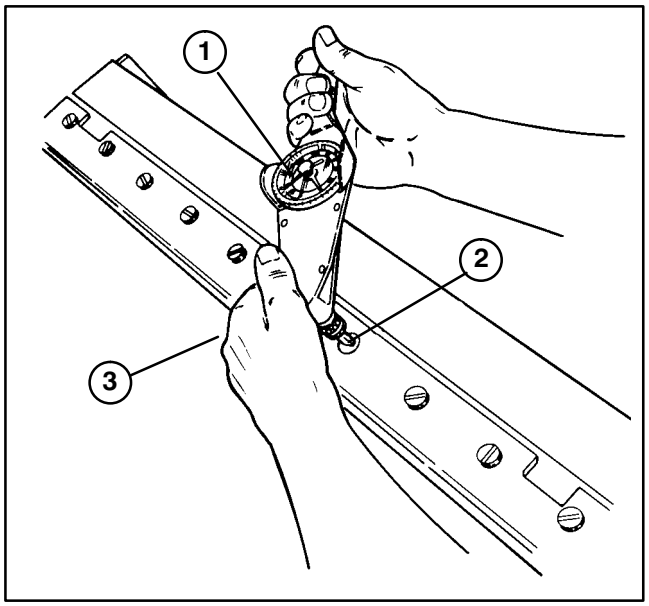

Figure 26

1. **Torque wrench**
2. **Tool−Toro part no. 51−0880**
3. **Torque from center out**

SERVICING THE REEL ASSEMBLY

PROTOTYPE

DISASSEMBLY:

1. Remove the guards from each end of the cutting unit and the front and rear roller assemblies (Fig. 27).

2. Remove the shoulder bolts, bushings and spacers from each end of the unit and remove the bedbar/bedknife assembly (Fig. 28).

3. Remove the inboard locknut from the adjuster pin, the fasteners for the bracket and remove the adjusting handle assembly from the sideplate (Fig. 28).

4. Disassemble the cone nut from the shoulder bolt securing the bearing housing to the sideplate, remove the belleville washer and bolt and slide the bearing housing off the reel shaft (Fig. 29).

5. Disassemble the cover from the drive housing and remove the drive belt from the housing (Fig. 29).

6. Remove the reel capscrew, toothed washer and pulley washer from the reel shaft (Fig. 30).

Note: Capscrew is assembled with a thread locking compound.

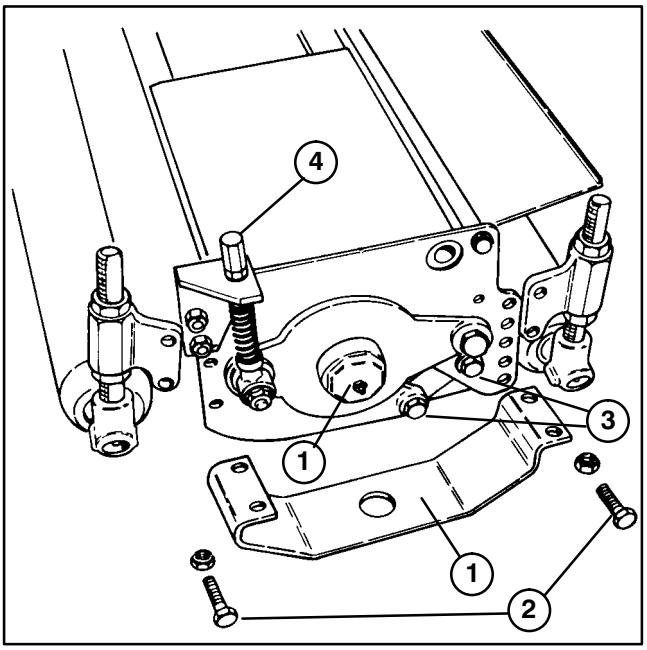

Figure 27

1. Guard
2. Mounting fasteners
3. Bedbar mounting assembly
4. Adjusting assembly
5. Dust cap

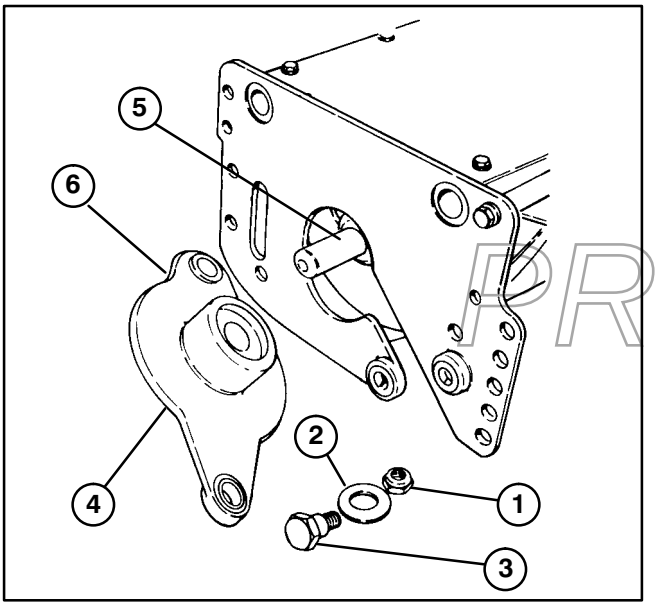

Figure 28

1. Locknut
2. Belleville washer
3. Shoulder bolt
4. Bearing housing
5. Reel shaft
6. Flange bushings

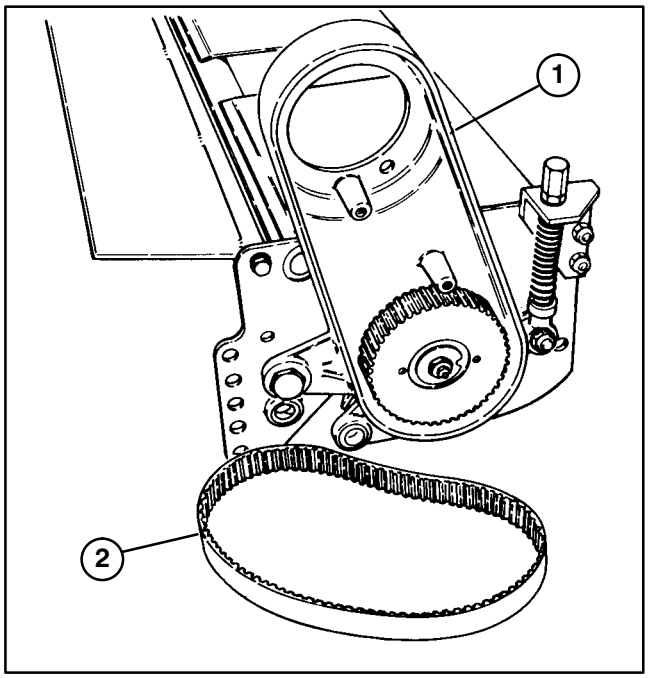

Figure 29

1. Drive housing (cover removed)
2. Drive belt

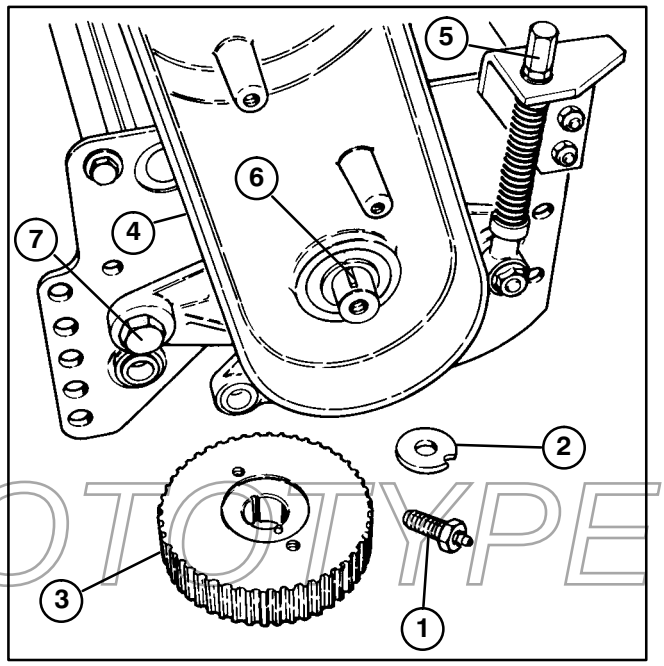

Figure 30

1. Reel capscrew
2. Pulley washer
3. Driven pulley
4. Drive housing
5. Adjusting handle assembly
6. Woodruff key
7. Drive housing fasteners

PROTOTYPE

7. Using a puller, remove the driven pulley from the reel shaft (Fig. 30). Remove the woodruff key from the reel shaft.

8. Remove the adjustment assembly and cone nut, belleville washer and shoulder bolt securing the housing to the sideplate (Fig. 30). Remove the housing.

9. Slide the reel assembly out of the slots in the sideplates.

10. To remove the bearing and seals from the drive housing, remove the retaining ring from inside the housing. Pry the outer seal out of the belt drive case side. Press the bearing and rear seal out from the outer side of the housing.

11. To remove the bearing and seal from the bearing housing, remove the dust cap (Fig. 27) and press the bearing and seal out of the housing.

ASSEMBLY:

1. Inspect the flange bushings in the mounting holes for the drive housing and bearing housing for wear (Fig. 28). Replace, if necessary.

2. Assemble the outer seal (lip facing in to retain grease) into the drive housing using Loctite 242 retaining compound on the outer diameter. Apply a light coat of oil to the seal lips and insert the bearing assembly through the seal from the opposite side (Fig 30).

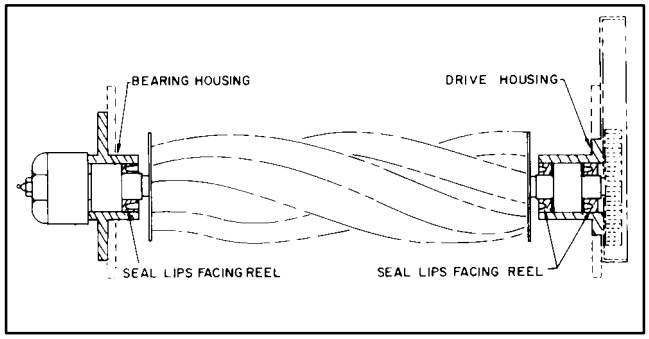

Figure 31

3. Apply a light coating of oil to the inner seal lips and install (lip facing away from the bearing and toward the reel) in the housing. Install the retaining ring to secure the assembly in the housing (Fig. 31).

4. Apply a light coat of oil to the seal lips of the seal for the bearing housing and install (lip facing away from the bearing) over the bearing assembly (Fig. 31).

5. Insert the bearing and seal in the housing and install the dust cap into the housing.

6. Assemble the reel assembly to the frame. Ensure the shield washer is installed on the drive housing end of the reel shaft. Align drive pin on reel shaft with slot in bearing and slide the drive housing onto the shaft.

7. Insert the shoulder bolt through the Belleville washer and rear housing mounting hole. Slide the bolt through the sideplate mounting hole (Fig. 28). Install the cone nut locknut onto the bolt. Tighten the cone nut to 45 – 55 ft.–lbs.

8. Align the drive pin on the reel shaft with the notch in the bearing inner race and slide the bearing housing over the opposite end of the reel shaft. Insert the shoulder bolt and belleville washer through the rear bearing housing mounting hole. Slide the bolt through the sideplate mounting hole. Install the cone onto the bolt. Tighten the cone nut to 45 – 55 ft. lbs.

9. Install the woodruff key in the drive housing end of the reel shaft and install the driven pulley onto the shaft.

10. Ensure the slot in the pulley washer is aligned with the roll pin in the pulley and install the washer, toothed washer and reel capscrew (Fig. 29). Apply a medium strength thread locking compound to the reel capscrew during assembly. Torque the capscrew to 45 – 55 ft.–lbs.

11. Install the reel adjustment assemblies to each sideplate. Install roll pins before tightening fasteners.

12. Install the bedbar/bedknife assembly.

13. Install the front and rear roller assemblies or skids.

14. To adjust the reel to the bedknife; refer to Reel to Bedknife Adjustment. To adjust the height–of–cut; refer to Height–of–Cut Adjustment section.

REMOVING THE ROLLER

The roller assemblies can be removed by the following methods:

1. Remove the fasteners securing the guard and roller adjustment housing to the side plate (Fig 32) or unscrew the upper cone nut and drop the threaded rod out of the adjustment housing (Fig. 33).

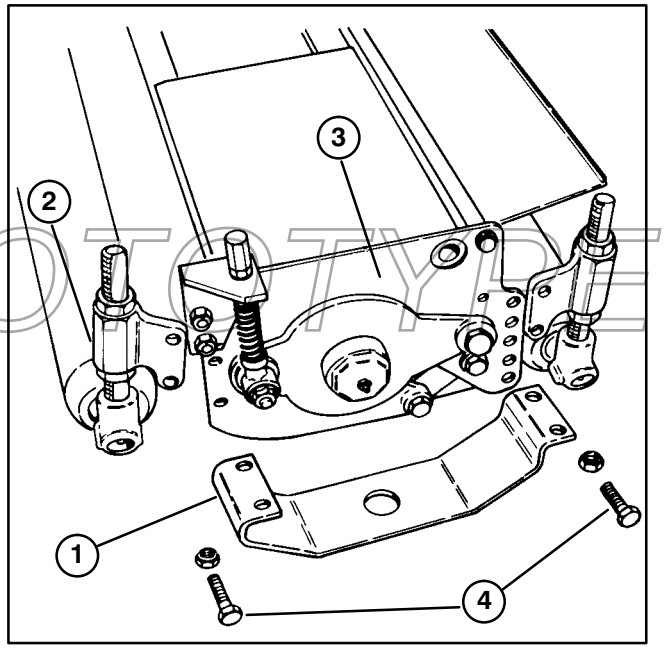

PROTOTYPE

Figure 32

1. **Guard**
2. **Roller adjusting housing**
3. **Sideplate**
4. **Mounting fasteners**

MAINTENANCE

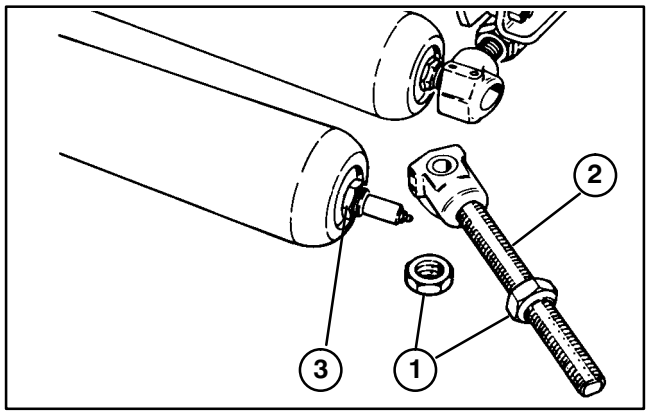

Figure 33

1. **Cone nut**
2. **Rod and collar assembly**
3. **Flex lock nut**

2. The threaded rod and collar assembly can be removed from the roller by sliding it off the shaft at both ends (Fig. 33).

INSTALLING THE ROLLER

IMPORTANT: When assembling a new roller to the cutting unit mount the roller so that the roller shaft ''locknut'' is on the right side of the cutting unit (Fig. 33). (As viewed by the operator sitting on seat of machine). This prevents the lock nut from loosening during operation.

PRODUCT IDENTIFICATION

The cutting unit has two identification numbers: a model number and a serial number that are stamped into a plate. The identification plate is located on the reel sideplate opposite drive housing. In any correspondence concerning the traction unit, supply the model and serial numbers to ensure correct information and replacement parts are obtained.

To order replacement parts from an Authorized TORO Distributor supply the following information:

1. Model and serial numbers of the traction unit.

2. Part number, description and quantity of parts desired.

Note: Do not order by reference number if a parts catalog is being used; use the part number.

PROTOTYPE

MAINTENANCE RECORD

Date								

PROTOTYPE

MAINTENANCE RECORD

Date								

PROTOTYPE

The Toro Promise

A Limited Warranty

The Toro Company promises to repair your TORO Product if defective in materials or workmanship. The following time periods from the date of purchase apply :

Commercial Products ..... 1 Year

The cost of parts, labor and transportation are included.

If you feel your TORO Product is defective and wish to rely on The Toro Promise, the following procedure is recommended:

1. Contact your Authorized TORO Distributor or Commercial Dealer (the Yellow Pages of your telephone directory is a good reference source).

2. The TORO Distributor or Commercial Dealer will advise you on the arrangements that can be made to inspect and repair your product.

3. The TORO Distributor or Commercial Dealer will inspect the product and advise you whether the product is defective and, if so, make all repairs necessary to correct the defect without an extra charge to you.

If for any reason you are dissatisfied with the distributor's analysis of the defect or the service performed, you may contact us.

Write:

TORO Commercial Products Service Department
8111 Lyndale Avenue South
Minneapolis, MN 55420–1196

The above remedy of product defects through repair by an Authorized TORO Distributor or Commercial Dealer is the purchaser's sole remedy for any defect.

THERE IS NO OTHER EXPRESS WARRANTY. ALL IMPLIED WARRANTIES OF MERCHANTIBILITY AND FITNESS FOR USE ARE LIMITED TO THE DURATION OF THE EXPRESS WARRANTY.

Some states do not allow limitations on how long an implied warranty lasts, so the above limitation may not apply to you.

This Warranty applies only to parts or components which are defective and does not cover repairs necessary due to normal wear, misuse, accidents, or lack of proper maintenance. Regular, routine maintenance of the unit to keep it in proper operating condition is the responsibility of the owner.

All warranty repairs reimbursable under The Toro Promise must be performed by an Authorized Toro Commercial Dealer or Distributor using Toro approved replacement parts.

Repairs or attempted repairs by anyone other than an Authorized TORO Distributor or Commercial Dealer are not reimbursable under the TORO Promise. In addition, these unauthorized repair attempts may result in additional malfunctions, the correction of which is not covered by warranty.

THE TORO COMPANY IS NOT LIABLE FOR INDIRECT, INCIDENTAL OR CONSEQUENTIAL DAMAGES IN CONNECTION WITH THE USE OF THE PRODUCT INCLUDING ANY COST OR EXPENSE OF PROVIDING SUBSTITUTE EQUIPMENT OR SERVICE DURING PERIODS OF MALFUNCTION OR NON–USE.

Some states do not allow the exclusion of incidental or consequential damages, so the above exclusion may not apply to you.

This warranty gives you specific legal rights, and you may also have other rights which vary from state to state.

COUNTRIES OTHER THAN THE UNITED STATES OR CANADA

Customers who have purchased TORO products exported from the United States or Canada should contact their TORO Distributor (Dealer) to obtain guarantee policies for your country, province, or state. If for any reason you are dissatisfied with your Distributor's service or have difficulty obtaining guarantee information, contact the TORO importer. If all other remedies fail, you may contact us at The Toro Company.

Compliance with Radio Interference Regulations Certified.

Litho in U.S.A.