TORO®

MODEL NO. 04499

INSTALLATION INSTRUCTIONS

OIL COOLER KIT
For Greensmaster® 3200

1. Clean area where hose from hydraulic reservoir connects to fitting on hydraulic filter mounting head.

2. Place a drain pan under filter head and remove clamp securing hose to fitting. This will allow oil to drain from reservoir. Remove fitting from filter head.

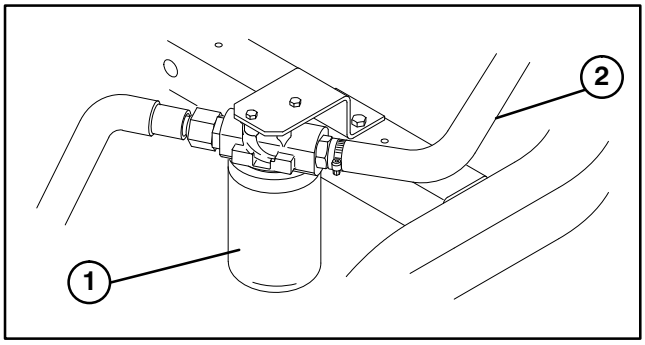

Figure 1
1. Hydraulic filter
2. Hydraulic hose

3. On other end of hose, remove clamp and fitting from reservoir (Fig. 2). Discard hose and fitting.

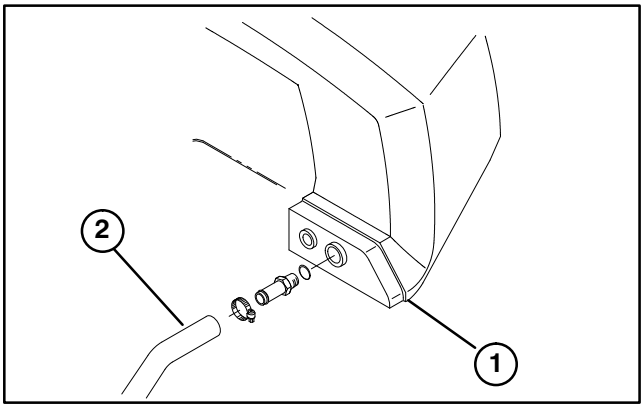

Figure 2
1. Hydraulic reservoir
2. Hydraulic hose

4. Mount a straight fitting w/ O−ring to hydraulic reservoir (Fig. 3).

5. Mount a 90° fitting w/ O−ring to hydraulic filter head. Position fitting as shown in figure 3.

Note: Make sure O−rings are in place when installing fittings.

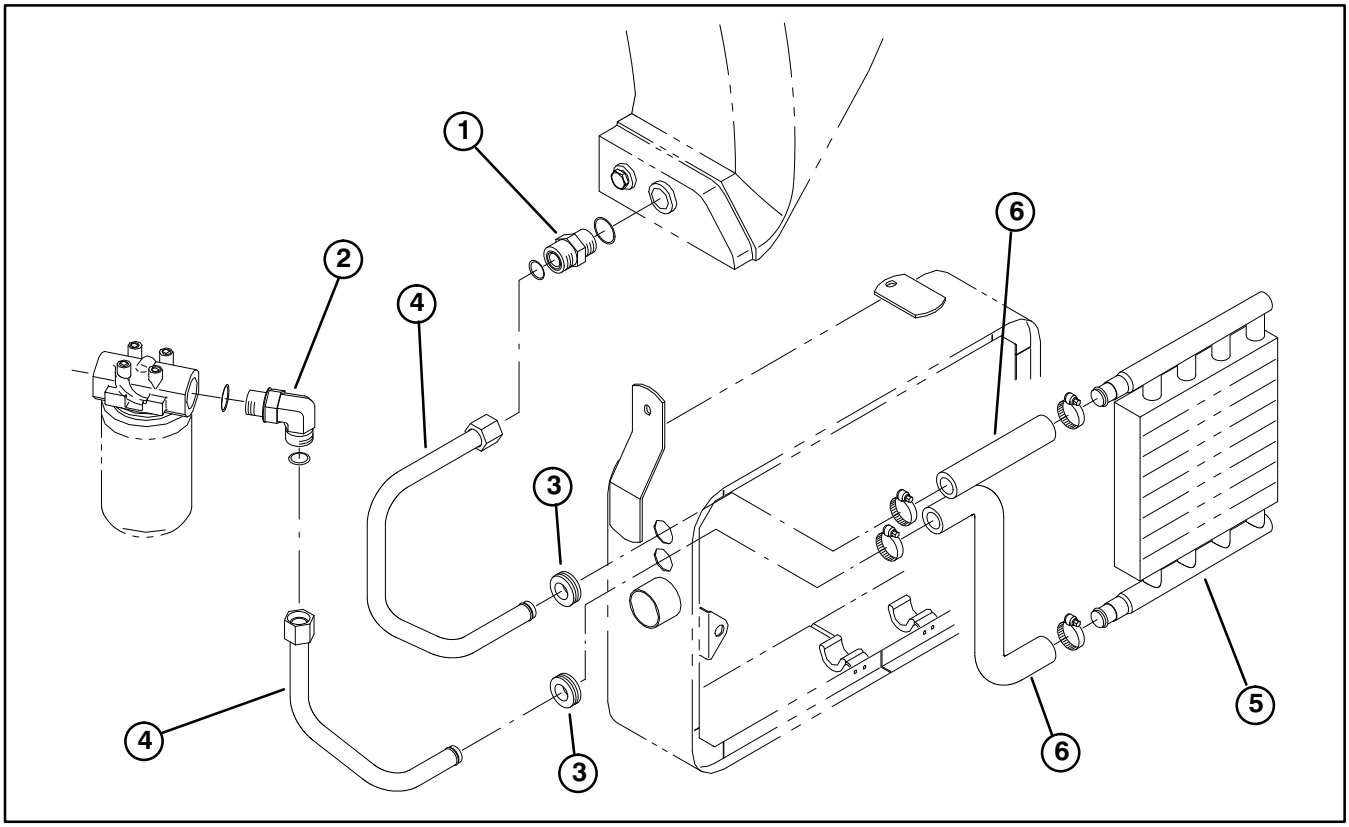

Figure 3
1. Straight fitting
2. 90° elbow fitting
3. Grommet
4. Tube assembly
5. Oil cooler
6. Formed hose

© The TORO Company − 1996, Rev. 1998

6. Remove radiator screen (Fig. 4).

7. Remove (2) plastic plugs from side of radiator (Fig. 4).

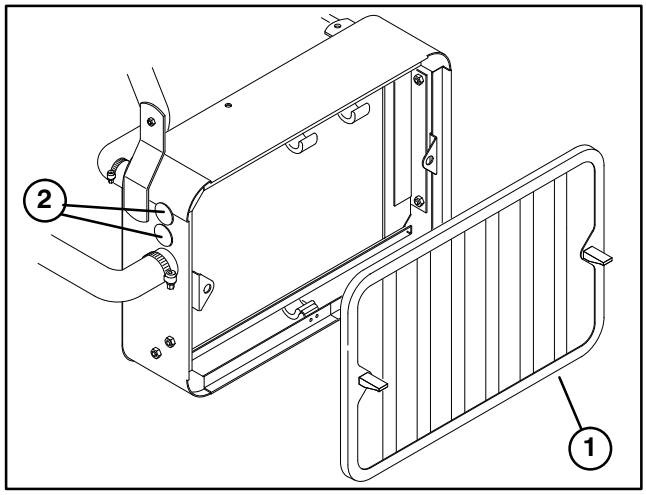

Figure 4
1. **Radiator screen**
2. **Plugs**

8. Insert a rubber grommet into each hole in side of radiator (Fig. 3).

9. Mount a tube assembly w/O−ring to straight fitting on hydraulic reservoir while inserting other end of tube through upper grommet in side of radiator (Fig. 3).

Note: Make sure O−rings are in place when installing tube assemblies.

10. Mount a tube assembly w/O−ring to elbow fitting on hydraulic filter head while inserting other end of tube through lower grommet in side of radiator (Fig. 3).

11. Assembly the (2) formed hoses to oil cooler with (2) hose clamps. Position hoses as shown in figure 3.

12. While hanging oil cooler onto J−hooks in radiator, secure formed hoses to tube assemblies with (2) hose clamps.

13. Clean radiator screen and re−install.

14. Fill hydraulic reservoir with Mobile 424 hydraulic oil.

15. Start the machine and run it at idle for 3 to 5 minutes to circulate the fluid and remove any air trapped in the system. Stop the machine and recheck the fluid level.