Form No. 3358-980 Rev B

TORO®

Count on it.

Parts Catalog

Sand/Infield Pro® 3040 Traction Unit

Model No. 08703—Serial No. 280000001 and Up

Register at www.Toro.com.
Original Instructions (EN)

3358-980 B

Ordering Replacement Parts

To order replacement parts, please supply the part number, the quantity, and the description of each part desired.

Understanding Reference Numbers

Each identified part in an illustration has a reference number. The reference number for a part also appears in the parts list, along with other information about the part.

This catalog uses two special reference number formats, one to indicate parts in a service assembly and another to indicate the quantity of a given part in an illustration.

Service Assembly Reference Numbers

Parts in service assemblies have reference numbers in the form a:b. The a represents the reference number of the entire service assembly and the b represents a sequential number unique to each part within the service assembly.

For example, a wheel assembly might be identified by reference number 6, the tire by 6:1, the valve by 6:2, and the wheel by 6:3. When you order the assembly identified by reference number 6, you receive all parts identified by reference numbers 6:1,6:2, and 6:3. However, you may also order any part individually. Reference numbers of this type appear in illustration and in parts lists.

Reference Numbers Indicating Quantity

In an illustration, if a reference number indicates more than one part, the reference number has the form nX y. The n represents the quantity of the part, the X is the multiplication symbol, and the y represents the reference number.

For example, in an illustration, the reference number 2X 37 means that two of the parts identified by reference number 37 are indicated.

List of Abbreviations

AR: as required

ASM: assembly

BBC: blade brake control

BHTF: button head thread forming

CARR: carriage

CCW: counter clockwise

CW: clockwise

DEG: degrees

DPA: Dual Point Adjustment

ECM: electronic control module

EXT: external

FH: flat head

GA: gauge

HD: heavy-duty

HF: hex flange

HH: hex head

HHF: hex head flange

HHFTF: hex head flange thread forming

HJ: hex jam

HLH: hex lag head

HOC: height-of-cut

HSBH: hex socket button head

HSFH: hex socket flat head

HSH: hex socket head

HWH: hex washer head

HWHTF: hex washer head thread forming

HYD: hydraulic

LH: left hand

LPG: Liquid Propane Gas

NI: nylon insert

NPTF: national pipe thread fine

PFH: phillips flat head

PPH: phillips pan head

PPHTF: phillips pan head thread forming

PRH: phillips round head

PTH: phillips truss head

PTO: power-take-off

RH: right hand

ROPS: roll-over protection system

RRB: rear roller brush

SFH: slotted fillister head

SHH: slotted hex head

SHWH: slotted hex washer head

SPH: slotted pan head

SQH: square head

SRH: slotted round head

STD: standard

TAP: self tapping

TTH: torx truss head

Contents

Frame and Console Assembly 4
Steering Assembly 5
Steering Box Assembly No. 107-3526 6
Fuel Tank and Battery Assembly 7
Front Wheel Assembly 8
Hydraulic Motor Assembly No. 108-2948 10
Rear Wheel Assembly 11
Hydraulic Motor Assembly No. 108-2949 12
Hydraulic Motor Assembly No. 108-2947 13
Traction Pedal Assembly 14
Pump Control Lever Assembly 15
Engine Installation Assembly 16
Pump and Coupling Assembly 17
Variable Piston Pump Assembly No. 114-0612 18
Hydraulic Tank, Filter and Cooler Assembly 20
Lift Valve and Rear Tube Assembly 21
Valve Assembly No. 43-1710 22
Seat and Shroud Assembly 23
Wire Harness, Air Cleaner and Hose Assembly 24
Air Cleaner Assembly No. 93-2190 25
Rear Hitch Assembly 26
Hydraulic Cylinder Assembly No. 110-1338 27
Cylinder Assembly Briggs and Stratton 305447-0178-E1 28
Crankcase Assembly Briggs and Stratton 305447-0178-E1 29
Crankshaft Assembly Briggs and Stratton 305447-0178-E1 30
Cylinder Head Assembly Briggs and Stratton 305447-0178-E1 31
Oil Filter, Tube and Pump Assembly Briggs and Stratton 305447-0178-E1 32
Carburetor Assembly Briggs and Stratton 305447-0178-E1 33
Governor Assembly Briggs and Stratton 305447-0178-E1 34
Flywheel Assembly Briggs and Stratton 305447-0178-E1 35
Blower Housing Assembly Briggs and Stratton 305447-0178-E1 36
Starter Assembly Briggs and Stratton 305447-0178-E1 37
358 Engine Gasket Set Briggs and Stratton 305447-0178-E1 38
1095 Valve Gasket Set and 121 Carburetor Overhaul Kit Briggs and Stratton 305447-0178-E1 39
Attachments and Accessories 40

© 2012—The Toro® Company
8111 Lyndale Avenue South
Bloomington, MN 55420

Contact us at www.Toro.com.
Printed in the USA.
All Rights Reserved

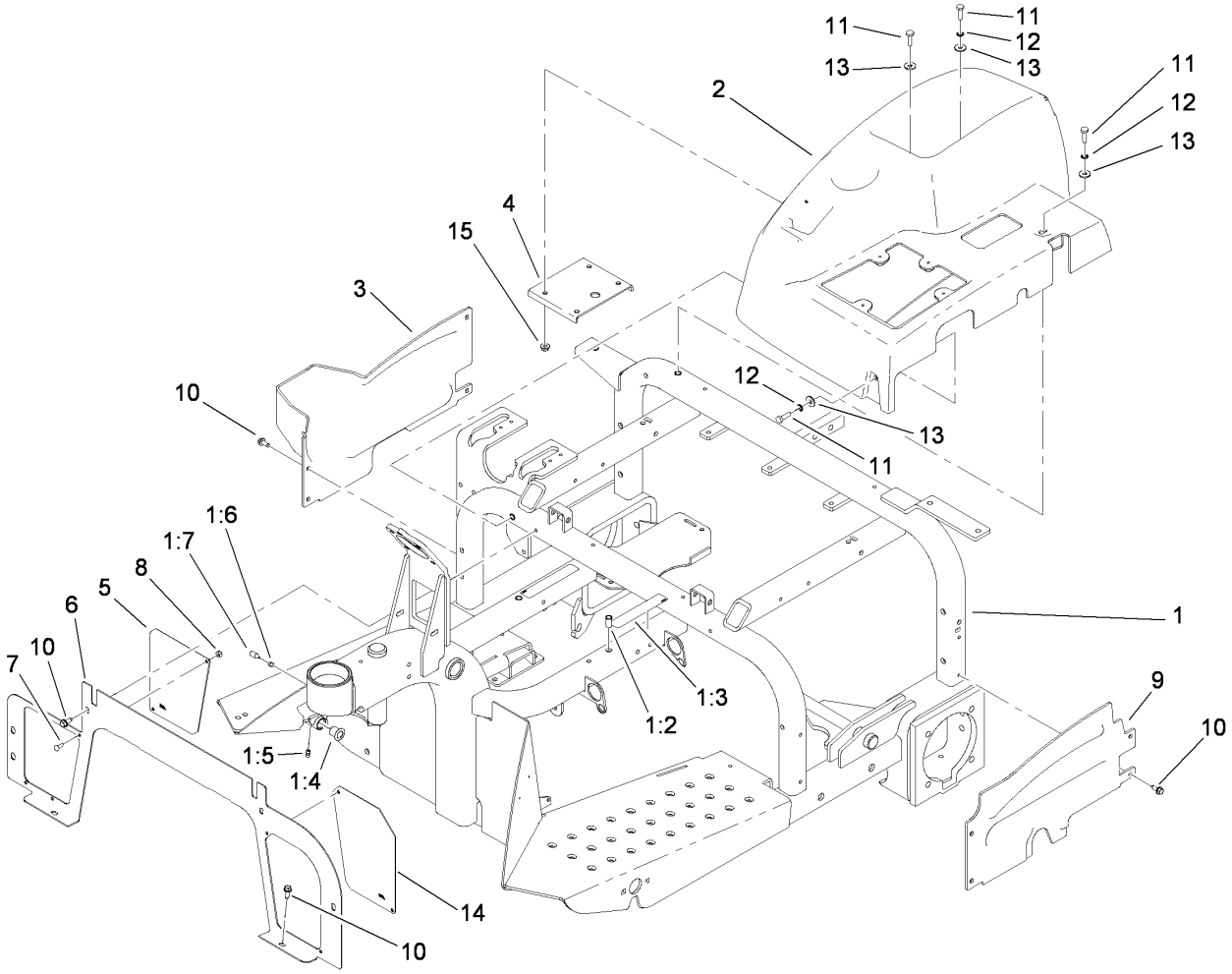

Frame and Console Assembly

Ref.	*Part Number*	*Qty.*	*Description*
1	110-3367	1	Frame ASM
1:2	32148-11	5	Insert-Threaded
1:3	93-7272	2	Decal-Warning
1:4	256-219	2	Bushing
1:5	302-58	1	Fitting-Straight
1:6	107-1997	1	Fitting-Grease
1:7	107-1998	1	Nozzle-Grease
2	108-2936	1	Console
3	108-6855	1	Shroud-Wheel, RH
4	108-7995-03	1	Plate-Support, Console
5	108-6854-01	1	Screen-Shroud
6	112-1443-01	1	Panel-Front
7	3290-321	4	Screw-HWH
8	3296-2	4	Nut-Lock, NI
9	108-6856	1	Shroud-Wheel, LH
10	32144-10	12	Screw-HWH
11	321-5	7	Screw-HH
12	3254-8	3	Washer-Lock
13	3256-78	7	Washer-Flat
14	108-7907-01	1	Screen-Panel, LH
15	32128-33	4	Nut-HF

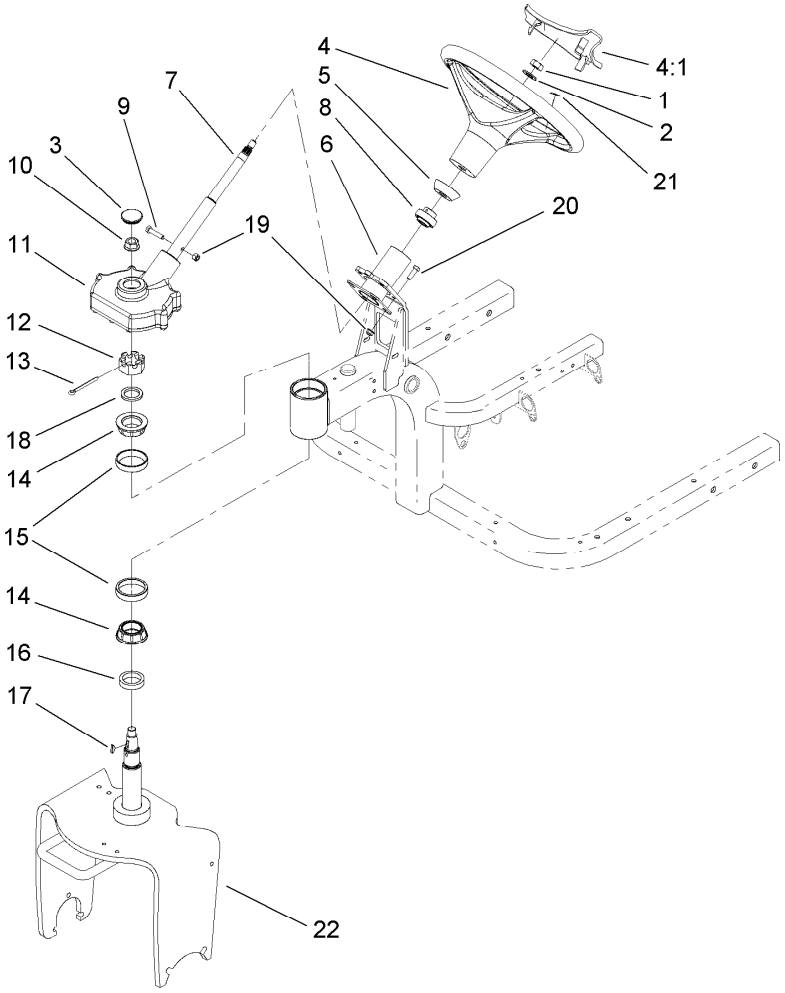

Steering Assembly

Ref.	Part Number	Qty.	Description
1	3296-33	1	Nut-Lock, NI
2	3256-27	1	Washer-Flat
3	107-3532	1	Grommet
4	98-1471	1	Wheel-Steering
4:1	98-1468	1	Cover-Wheel, Steering
5	93-5429	1	Collar-Foam
6	107-3540-03	1	Tube ASM
7	107-3533	1	Shaft-Steering
8	106-8448	1	Bearing-Race, Extended
9	322-7	1	Screw-HH
10	32128-54	1	Nut-HF
11	107-3526	1	Steering Box ASM
12	32136-9	1	Nut-Hex, Slotted
13	3272-37	1	Pin-Cotter
14	107-7589	2	Cone-Bearing (W/ Seal)
15	107-7590	2	Cup-Bearing
16	108-5432	1	Spacer-Bearing
17	3257-5	1	Key-Woodruff
18	110-8195	1	Washer-Steering
19	104-8300	5	Nut-Flange, NI
20	322-5	4	Screw-HH
21	98-1459	1	Decal
22	107-3543-01	1	Fork ASM

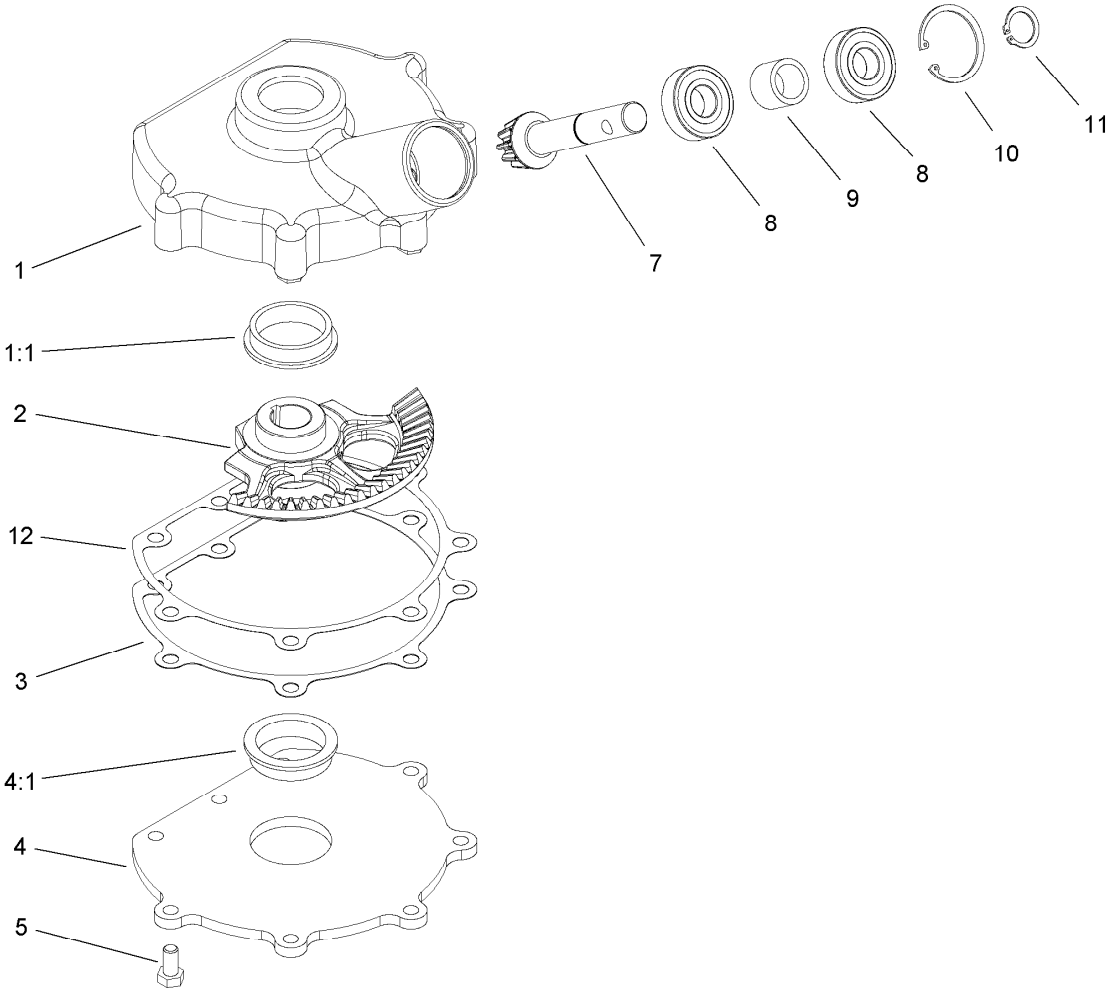

Steering Box Assembly No. 107-3526

Ref.	*Part Number*	*Qty.*	*Description*
1	108-4520	1	Steering Cover ASM
1:1	92-6869	1	Bushing
2	107-3520	1	Gear-Sector
3	107-3529	1	Gasket-Steering
4	107-3524	1	Steering Plate ASM
4:1	92-6869	1	Bushing
5	322-2	8	Screw-HH
7	107-3527	1	Gear-Pinion
8	38-7820	2	Bearing-Ball
9	108-4502	1	Spacer
10	107-3530	1	Ring-Retaining
11	32151-12	1	Ring-Retaining
12	108-8442	3	Shim-Plate, Steering

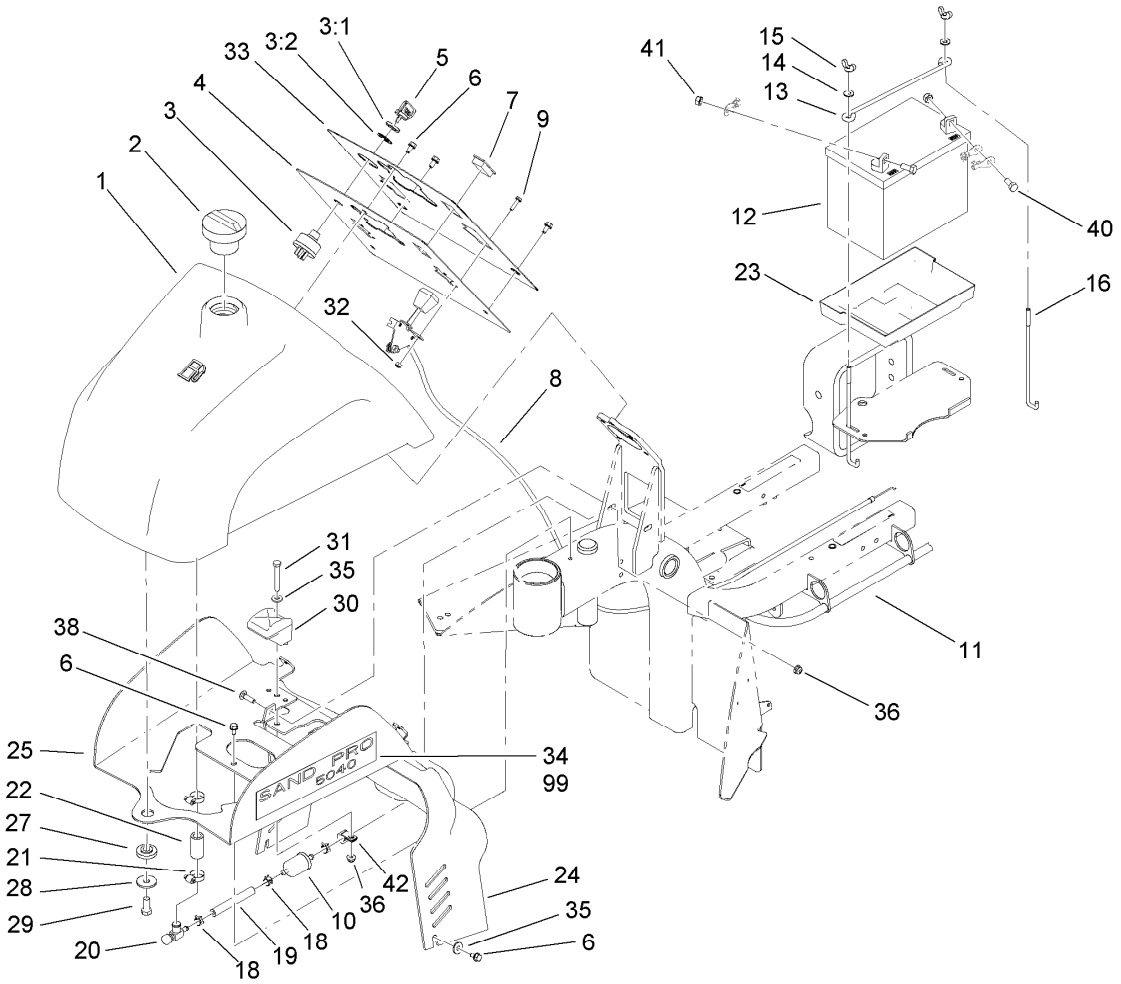

Fuel Tank and Battery Assembly

Ref.	Part Number	Qty.	Description
1	108-2938	1	Tank-Fuel
2	93-7170	1	Cap-Fuel
3	83-0020	1	Switch-Ignition
3:1	218-461	1	Nut-HH
3:2	3254-5	1	Washer-Tooth, Internal
4	108-6896-03	1	Panel-Dash
5	63-8360	2	Key-Ignition (W/Shield)
6	32144-10	6	Screw-HWH
7	99-7420	1	Plug-Hole
8	108-7946	2	Cable ASM
9	3290-321	4	Screw-HWH
10	94-2690	1	Filter-Fuel
11	110-3372	1	Hose-Fuel
12	104-8162	1	Battery
13	100-6434	1	Rod-Hold Down, Battery
14	3256-22	2	Washer-Flat
15	32103-22	2	Nut-Wing
16	100-6435	2	Post-Battery
18	2412-98	4	Clamp-Hose
19	109-0660	1	Hose-Fuel
20	83-1390	1	Valve-Shut-Off, Fuel

Ref.	Part Number	Qty.	Description
21	2412-36	2	Clamp-Hose
22	110-3371	1	Hose-Fuel
23	106948	1	Tray-Battery
24	108-6898	1	Shroud-Dash
25	108-6895-01	1	Bracket-Mount, Tank
27	240-11	1	Bushing-Flange
28	63-8410	1	Washer
29	323-5	1	Screw-HH
30	107-4543	2	Clamp
31	321-18	2	Screw-HH
32	3296-2	4	Nut-Lock, NI
33	108-8487	1	Decal-Dash
34	108-8420	2	Decal
35	3256-78	4	Washer-Flat
36	104-7201	4	Nut-HF
38	3229-1	2	Bolt-CARR
40	322-3	2	Screw-HH
41	3217-6	2	Nut-Hex
42	2412-73	1	Clamp-R
99	108-8422	2	Decal

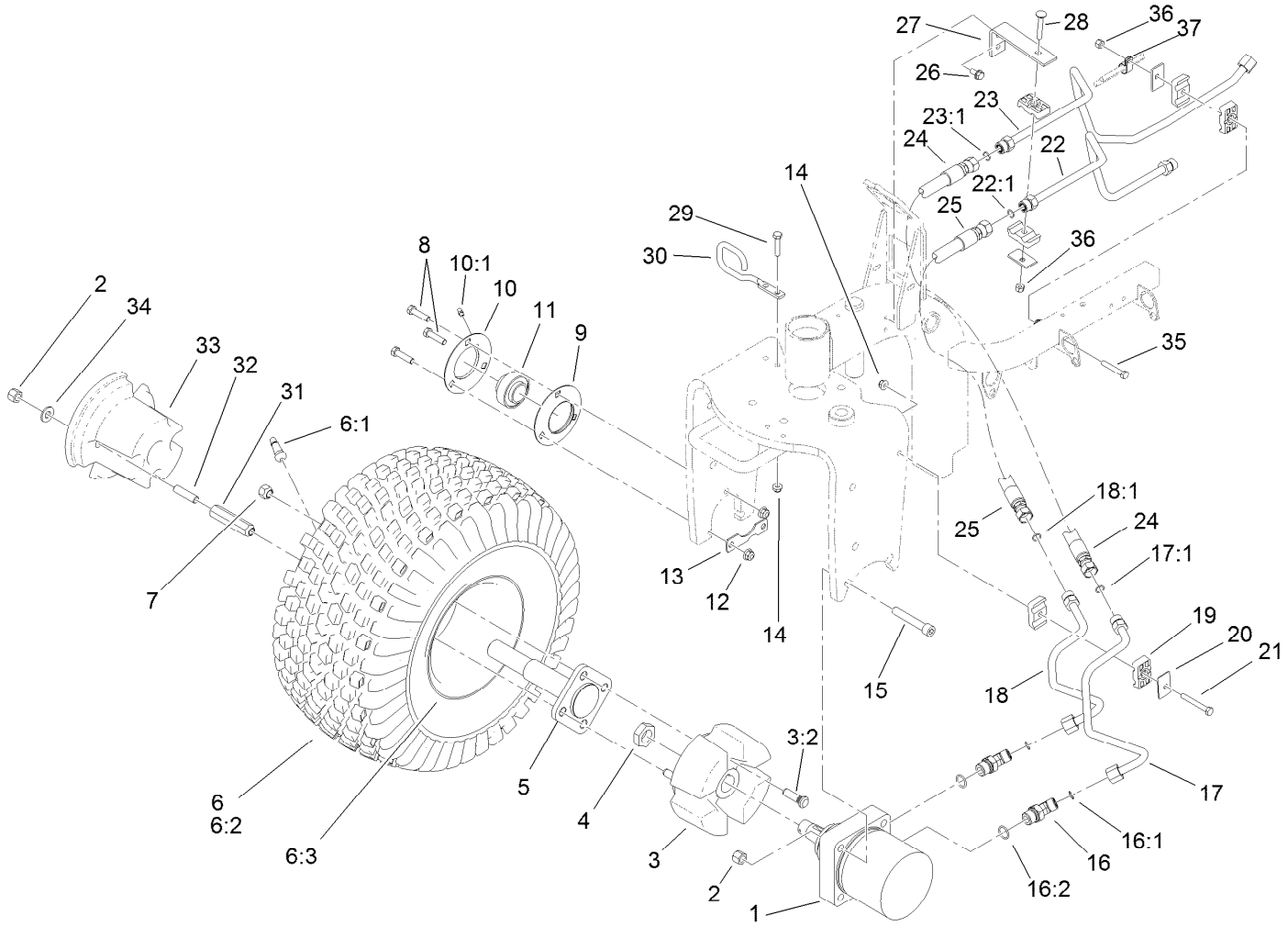

Front Wheel Assembly

Ref.	Part Number	Qty.	Description
1	108-2948	1	HYD Motor ASM (CW)
2	3296-23	4	Nut-Lock, NI
3	110-6310	1	Front Wheel Hub ASM
3:2	10-6830	4	Stud-Type, Drive
4	26-3790	1	Nut-Lock
5	110-6314	1	Spindle
6	95-0621	1	Wheel And Tire ASM
6:1	232-35	1	Valve Stem And Cap ASM
6:2	85-8290	1	Tire-2Ply, Knobby
6:3	94-6116	1	Wheel-Rear
7	242-50	2	Nut-Lug
8	323-8	3	Screw-HH
9	85-8950	1	Flangette-Standard
10	85-8940	1	Flangette-Relube
10:1	302-5	1	Fitting-Grease
11	251-352	1	Bearing
12	104-8301	3	Nut-Flange, NI
13	88-8350	1	Tab-Bearing
14	104-8300	3	Nut-Flange, NI
15	3274-93	2	Screw-HSH
16	340-89	2	Fitting-HYD, 45 DEG

Ref.	Part Number	Qty.	Description
16:1	237-30	1	O-Ring
16:2	237-80	1	O-Ring
17	108-8432	1	Tube ASM
17:1	237-30	1	O-Ring
18	108-8431	1	Tube ASM
18:1	237-30	1	O-Ring
19	56-7976	6	Clamp-Tube
20	69-9760	3	Coverplate
21	322-12	1	Screw-HH
22	108-8411	1	Tube ASM
22:1	237-30	2	O-Ring
23	108-8409	1	Tube ASM
23:1	237-30	1	O-Ring
24	108-8433	1	HYD Hose ASM
25	110-6303	1	HYD Hose ASM
26	32144-14	2	Screw-HWHTF
27	108-8455-01	1	Bracket-Clamp
28	3230-6	1	Screw-CARR
29	322-7	2	Screw-HH
30	108-8435	1	Guide-Hose
31	107-3399	2	Adapter-Weight, Wheel

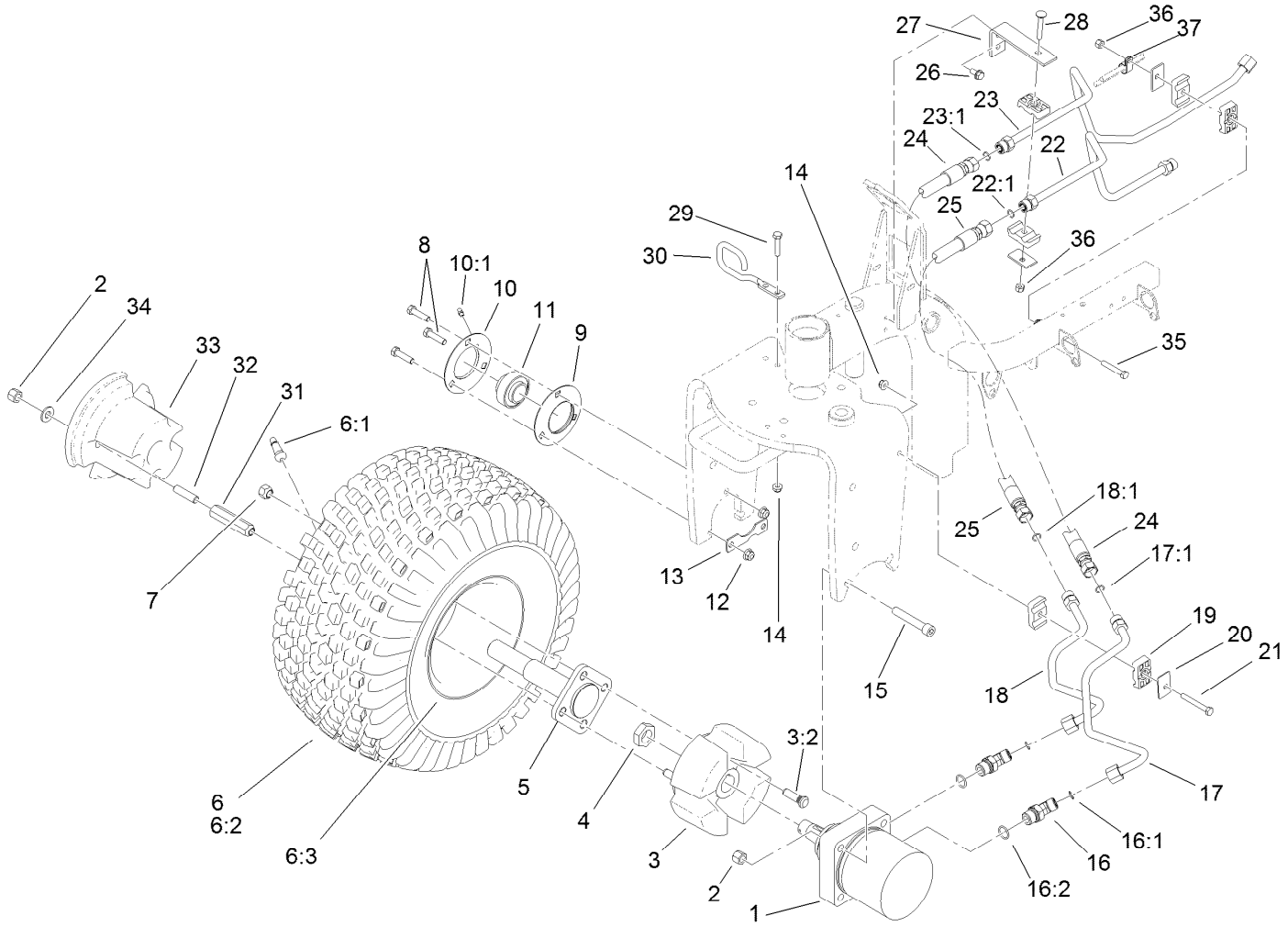

Front Wheel Assembly (continued)

Ref.	Part Number	Qty.	Description
32	110-6311	2	Stud
33	110-6312-03	1	Weight
34	87-7270	2	Washer-Thrust

Ref.	Part Number	Qty.	Description
35	322-10	1	Screw-HH
36	3296-29	2	Nut-Lock, NI
37	2412-41	1	Clamp

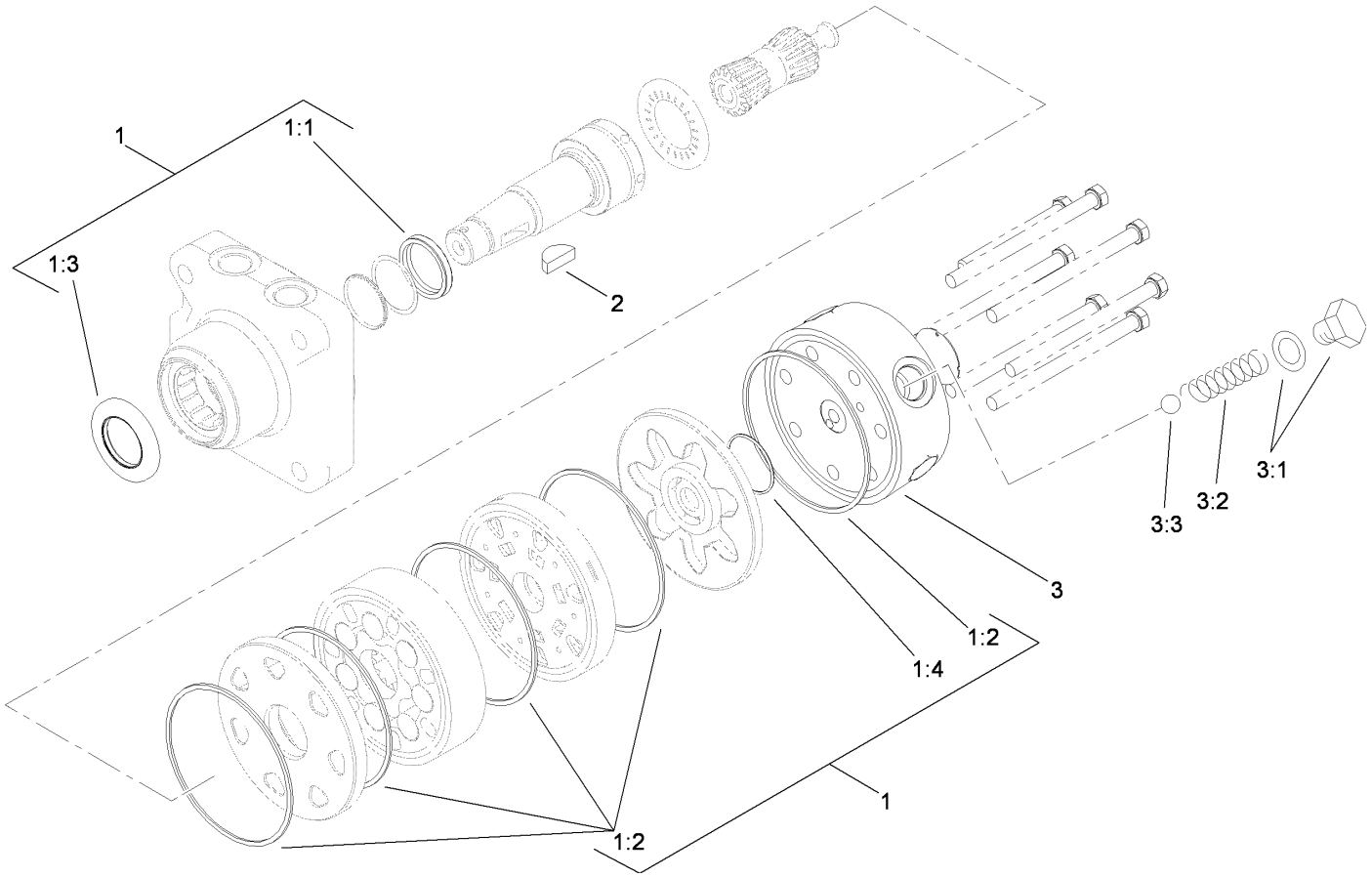

Hydraulic Motor Assembly No. 108-2948

Ref.	*Part Number*	*Qty.*	*Description*
1	110-6459	1	Seal Kit
1:1		1	Seal-Shaft ●
1:2		5	Seal-Body ●
1:3		1	Seal-Dirt / Water ●
1:4		1	Seal-Commutator ●
2	3257-42	1	Key-Woodruff
3	99-3538	1	End Cover ASM
3:1		1	Spring Cap And O-Ring ASM ●
3:2	99-3541	1	Spring
3:3	99-3540	1	Ball

● Not serviced separately

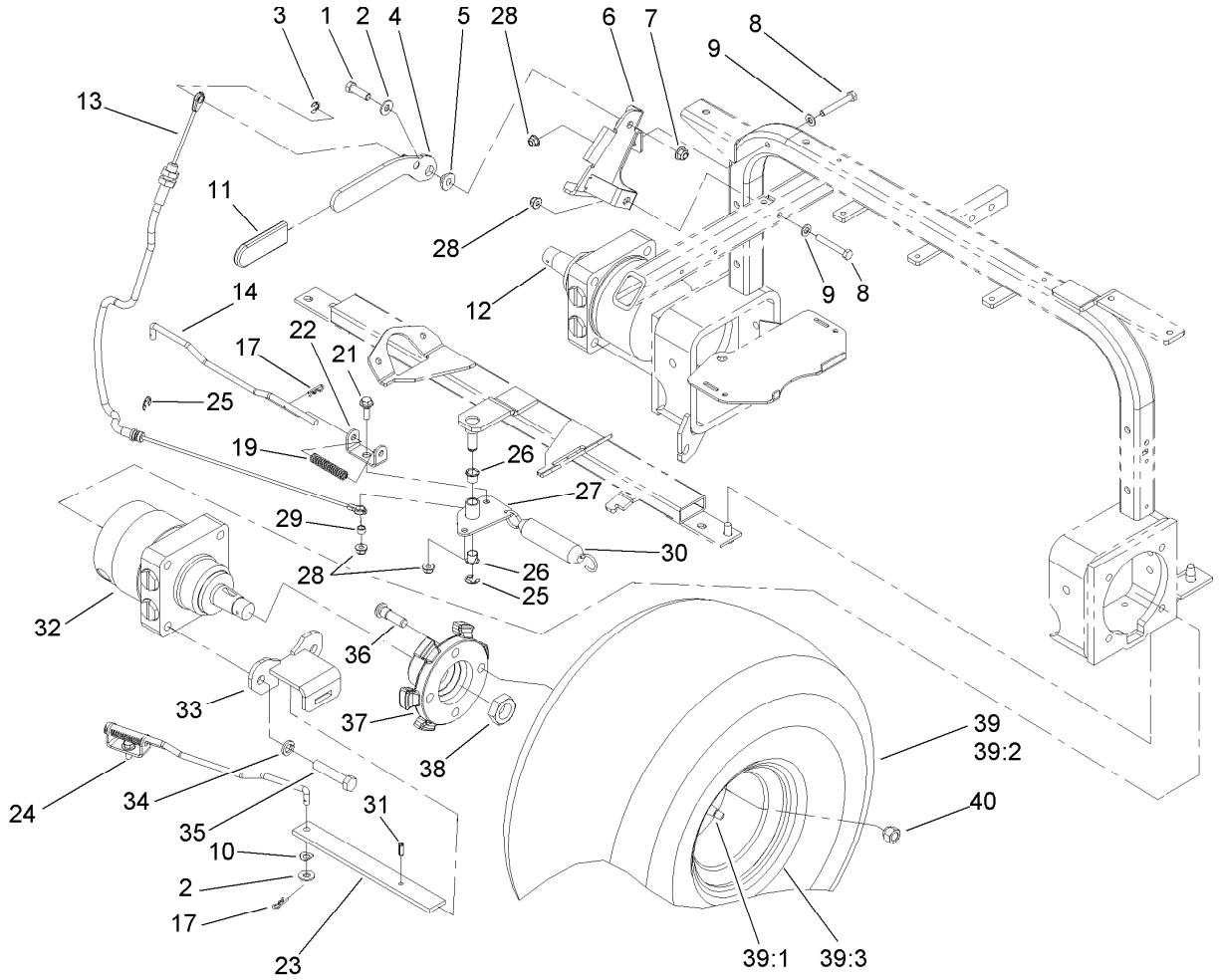

Rear Wheel Assembly

Ref.	Part Number	Qty.	Description
1	323-7	1	Screw-HH
2	3256-3	3	Washer-Flat
3	32151-47	1	Ring-Retaining
4	108-7991-03	1	Brake Lever ASM
5	108-7994	1	Bushing-Pivot, Lever
6	108-7988-03	1	Brake Lever Bracket ASM
7	104-8301	1	Nut-Flange, NI
8	322-11	2	Screw-HH
9	3256-23	2	Washer-Flat
10	3290-301	2	Washer-Spring
11	21-1880	1	Grip-Handle
12	108-2949	1	HYD Motor ASM (CW)
13	108-7913	1	Cable-Brake, Park
14	108-7987	2	Link-Latch, Parking
17	3290-307	4	Pin-Hair
19	107-3376	2	Spring-Compression
21	19-1471	1	Screw-Shoulder
22	114-0631	2	Clevis-Latch, Parking
23	108-7986-03	2	Bar-Brake
24	19-1470	1	Screw-Shoulder

Ref.	Part Number	Qty.	Description
25	32120-47	2	Ring-Retaining, External
26	256-257	2	Bushing-Nyliner
27	108-7979-03	1	Bellcrank ASM
28	104-8300	4	Nut-Flange, NI
29	108-7983	1	Bushing-Cable
30	66-4270	1	Spring-Extension
31	32121-11	2	Pin-Roll
32	108-2947	1	HYD Motor ASM (CCW)
33	108-7973-03	2	Brake Bracket ASM
34	3253-7	8	Washer-Lock
35	325-10	8	Screw-HH
36	85-6540	8	Stud-Drive
37	108-7977-03	2	Hub-Wheel
38	26-3790	2	Nut-Lock
39	95-0621	2	Wheel And Tire ASM
39:1	232-35	1	Valve Stem And Cap ASM
39:2	85-8290	1	Tire-2Ply, Knobby
39:3	94-6116	1	Wheel-Rear
40	242-50	8	Nut-Lug

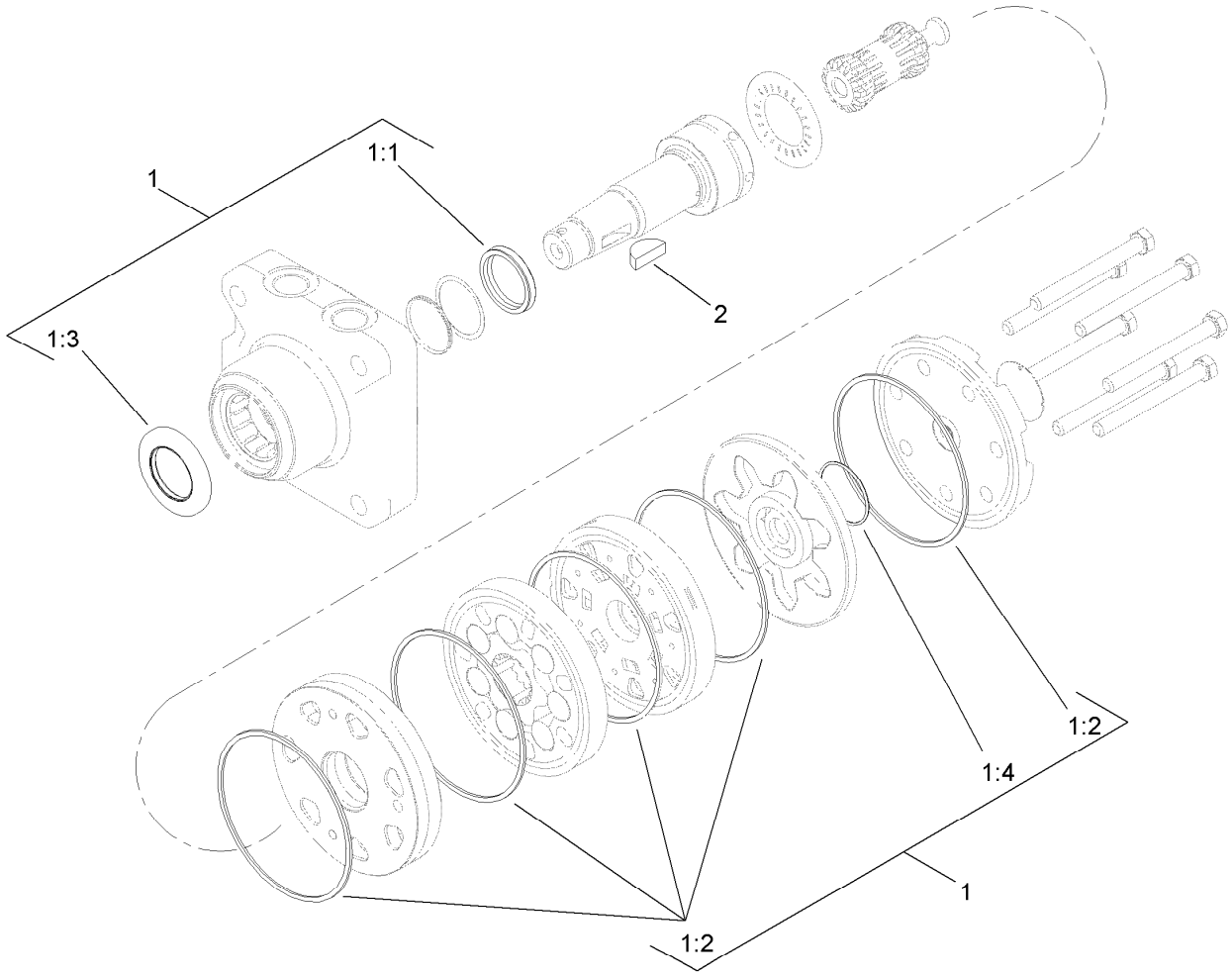

Hydraulic Motor Assembly No. 108-2949

Ref.	*Part Number*	*Qty.*	*Description*
1	110-6459	1	Seal Kit
1:1		1	Seal-Shaft ●
1:2		5	Seal-Body ●
1:3		1	Seal-Dirt / Water ●
1:4		1	Seal-Commutator ●
2	3257-42	1	Key-Woodruff

● Not serviced separately

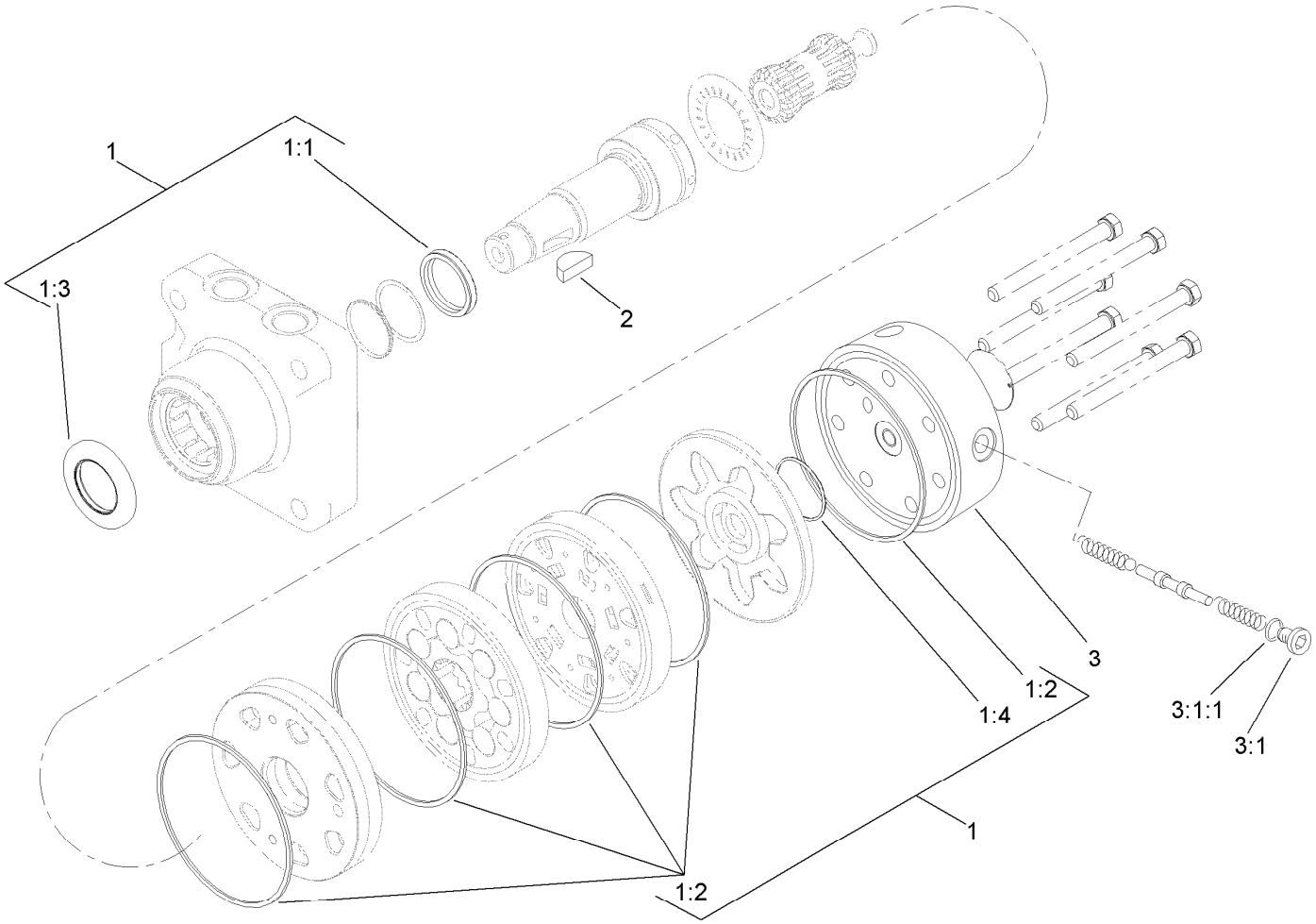

Hydraulic Motor Assembly No. 108-2947

Ref.	*Part Number*	*Qty.*	*Description*
1	110-6459	1	Seal Kit
1:1		1	Seal-Shaft ●
1:2		5	Seal-Body ●
1:3		1	Seal-Dirt / Water ●
1:4		1	Seal-Commutator ●
2	3257-42	1	Key-Woodruff
3	110-3381	1	End Cover ASM
3:1	353-990	1	Plug
3:1:1	237-78	1	O-Ring

● Not serviced separately

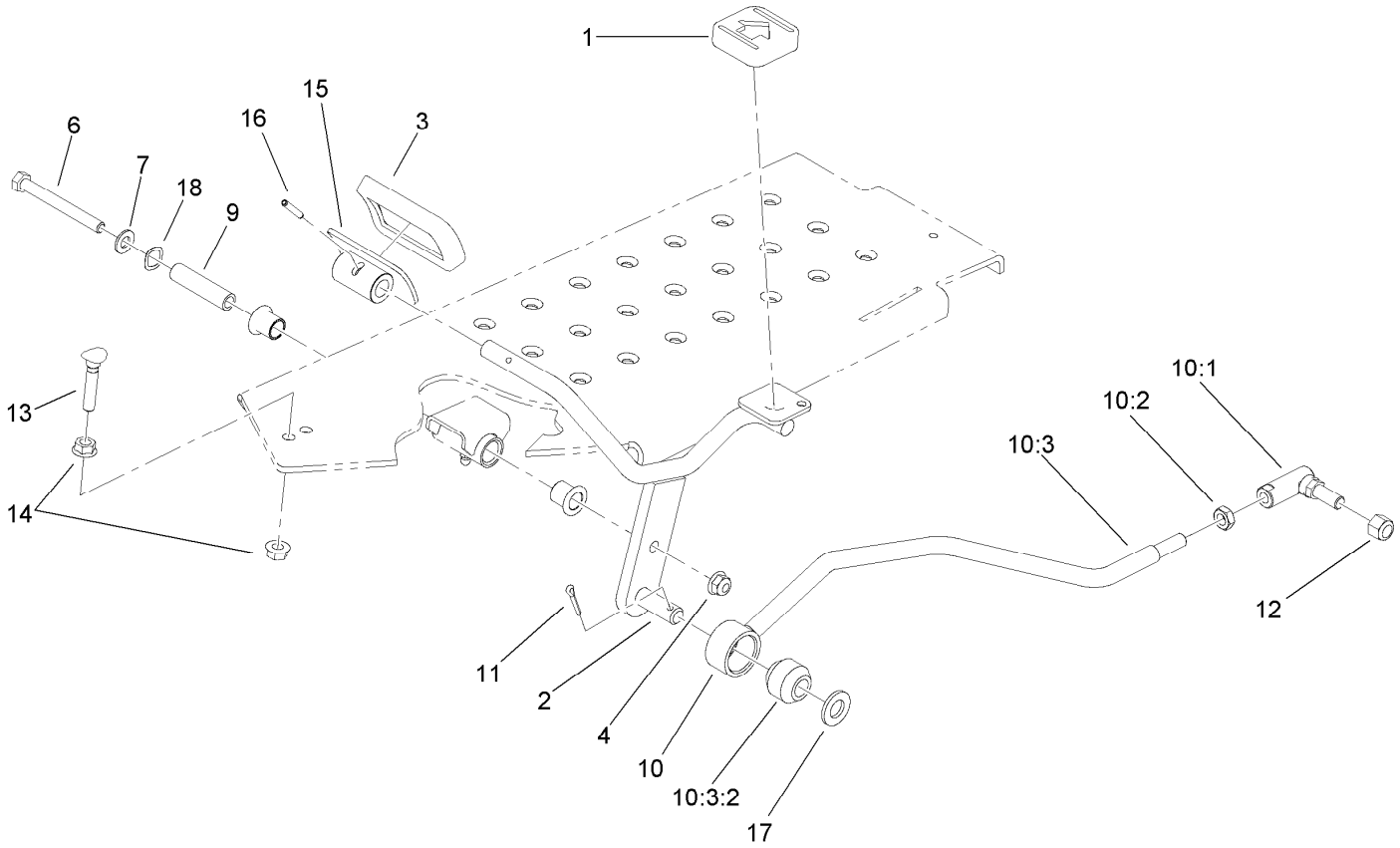

Traction Pedal Assembly

Ref.	Part Number	Qty.	Description
1	74-9110	1	Pad-Pedal, Reverse
2	108-5498-01	1	Pedal ASM
3	74-9100	1	Pad-Pedal, Forward
4	104-8300	1	Nut-Flange, NI
6	322-14	1	Screw-HH
7	3256-23	1	Washer-Flat
9	85-8960	1	Spacer
10		1	Traction Rod ASM ●
10:1	68-3840	1	Joint-Ball, RH Threaded
10:2	3220-3	1	Nut-HJ
10:3	110-8160	1	Rod ASM
10:3:2	23-2270	1	Bushing-Rubber
11	3272-10	1	Pin-Cotter
12	3296-6	1	Nut-Lock
13	17-9420	1	Screw-Handle
14	32128-20	2	Nut-HF
15	49-6440-03	1	Pedal-Forward
16	32121-45	1	Pin-Spring
17	106-9888	1	Washer-Flat
18	108473	1	Washer-Wave

● Not serviced separately

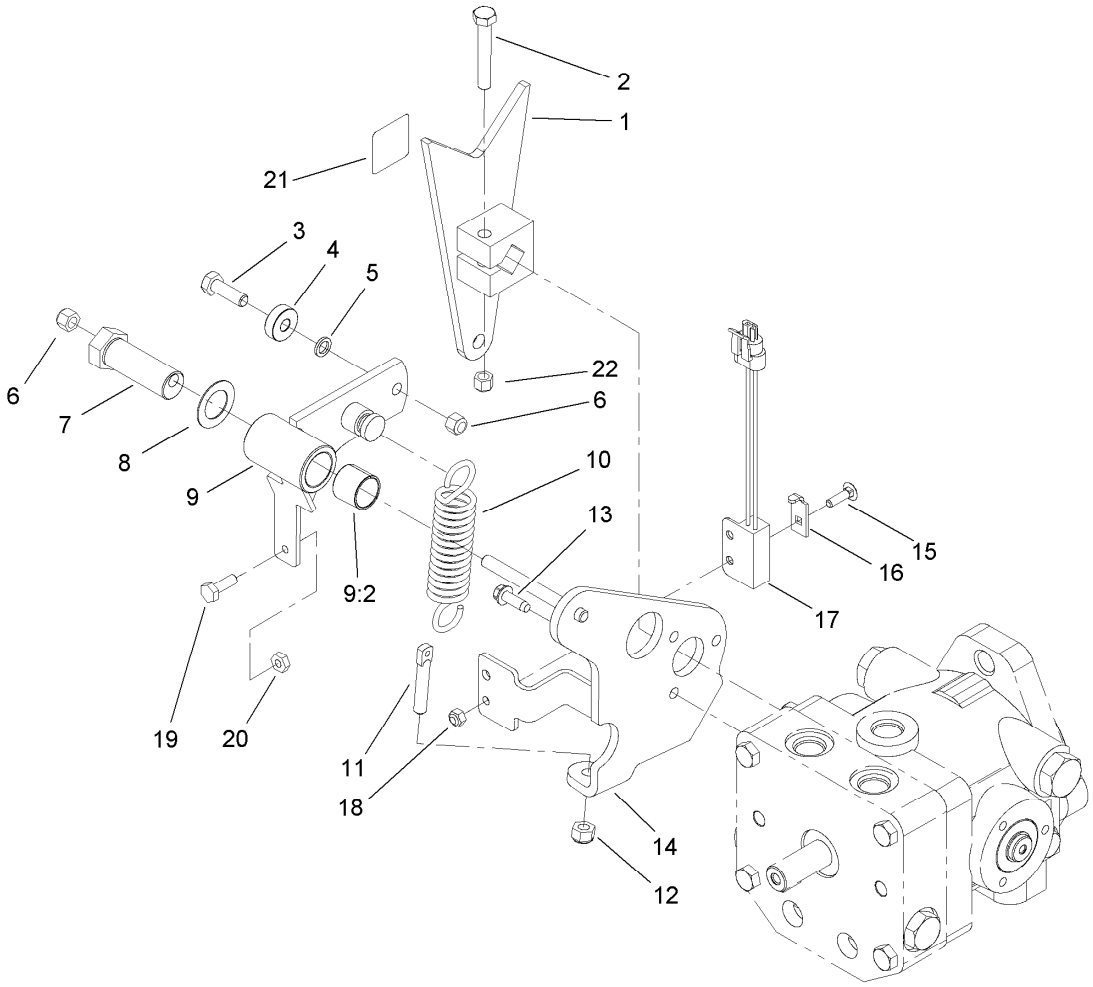

Pump Control Lever Assembly

Ref.	Part Number	Qty.	Description
1	112-6458-03	1	Pump Lever ASM
2	323-11	1	Screw-HH
3	322-5	1	Screw-HH
4	251-307	1	Bearing-Ball
5	75-5470	1	Spacer-Bearing
6	3296-29	2	Nut-Lock, NI
7	76-8640	1	Stud-Traction
8	3-6498	1	Washer-Thrust
9	108-5493	1	Arm ASM
9:2	94-9609	2	Bushing-Straight
10	85-9030	1	Spring-Extension
11	18-6380	1	Pin-Adjustment, Steering
12	3296-4	1	Nut-Lock
13	49-2040	3	Screw-HWHTF
14	108-5490-03	1	Pump Plate ASM
15	3229-20	1	Screw-CARR
16	100-4872	1	Plate-Switch, Neutral
17	105-0023	1	Switch-Proximity
18	3296-2	1	Nut-Lock, NI
19	321-4	1	Screw-HH
20	3218-1	1	Nut-Jam
21	93-9051	1	Decal-Bolt, Eccentric
22	3296-39	1	Nut-Lock, NI

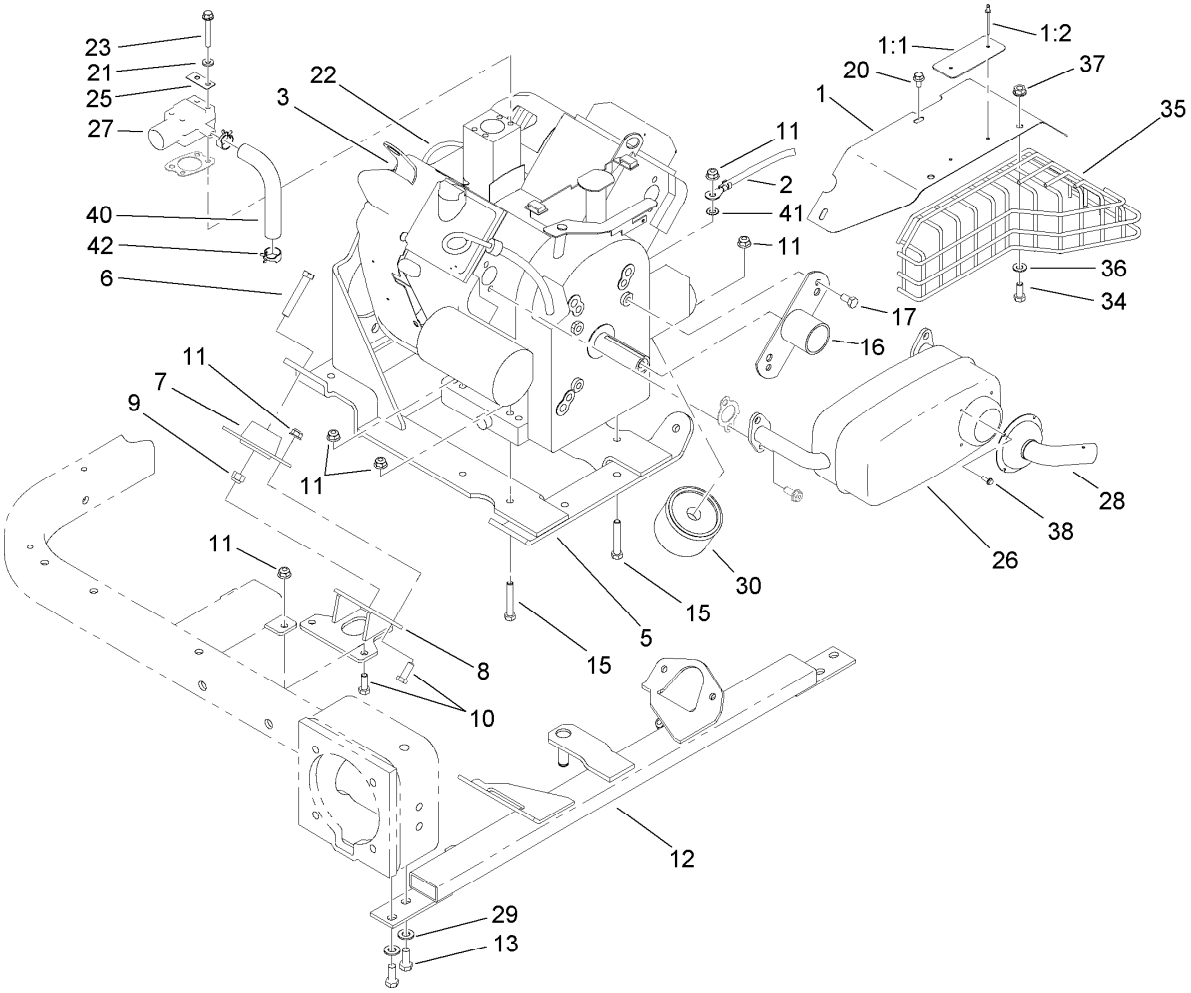

Engine Installation Assembly

Ref.	Part Number	Qty.	Description
1	105-8523	1	Muffler Shield ASM
1:1	95-0645	1	Plate-Surface, Hot
1:2	3269-32	2	Rivet-Pop
2	54-3093	1	Cable-Battery, Negative
3	108-2942	1	Engine-Briggs & Stratton, 305447-0178
5	108-2809-03	1	Engine Support ASM
6	323-11	4	Screw-HH
7	83-1030	4	Mount-Engine
8	108-8474-01	2	Front Mount ASM
9	104-8301	4	Nut-Flange, NI
10	322-4	12	Screw-HH
11	104-8300	16	Nut-Flange, NI
12	108-2819-01	1	Engine Mount ASM
13	323-5	4	Screw-HH
15	322-10	4	Screw-HH
16	95-0632-03	1	Cover ASM
17	3210-2	2	Screw-HH

Ref.	Part Number	Qty.	Description
20	33103-012	3	Screw-HHF
21	3256-16	4	Washer-Flat
22	110-8181	1	Hose-Fuel
23	33103-045	4	Screw-HHF
25	108-8427	2	Gasket-Carburetor
26	114-0628	1	Muffler-Inlet, Dual
27	108-2829	1	Adaptor-Carburetor
28	110-1306	1	Pipe-Tail
29	3256-24	4	Washer-Flat
30	107-7817	1	Filter-Oil, Engine
34	322-3	3	Screw-HH
35	110-6348-03	1	Shield-Exhaust
36	3256-23	3	Washer-Flat
37	32128-25	3	Nut-HF
38	32144-87	4	Screw-HWHTF
40	112-6461	1	Hose-Adapter, Carboretor
41	3255-8	1	Washer-Lock
42	2412-143	2	Clamp-Hose

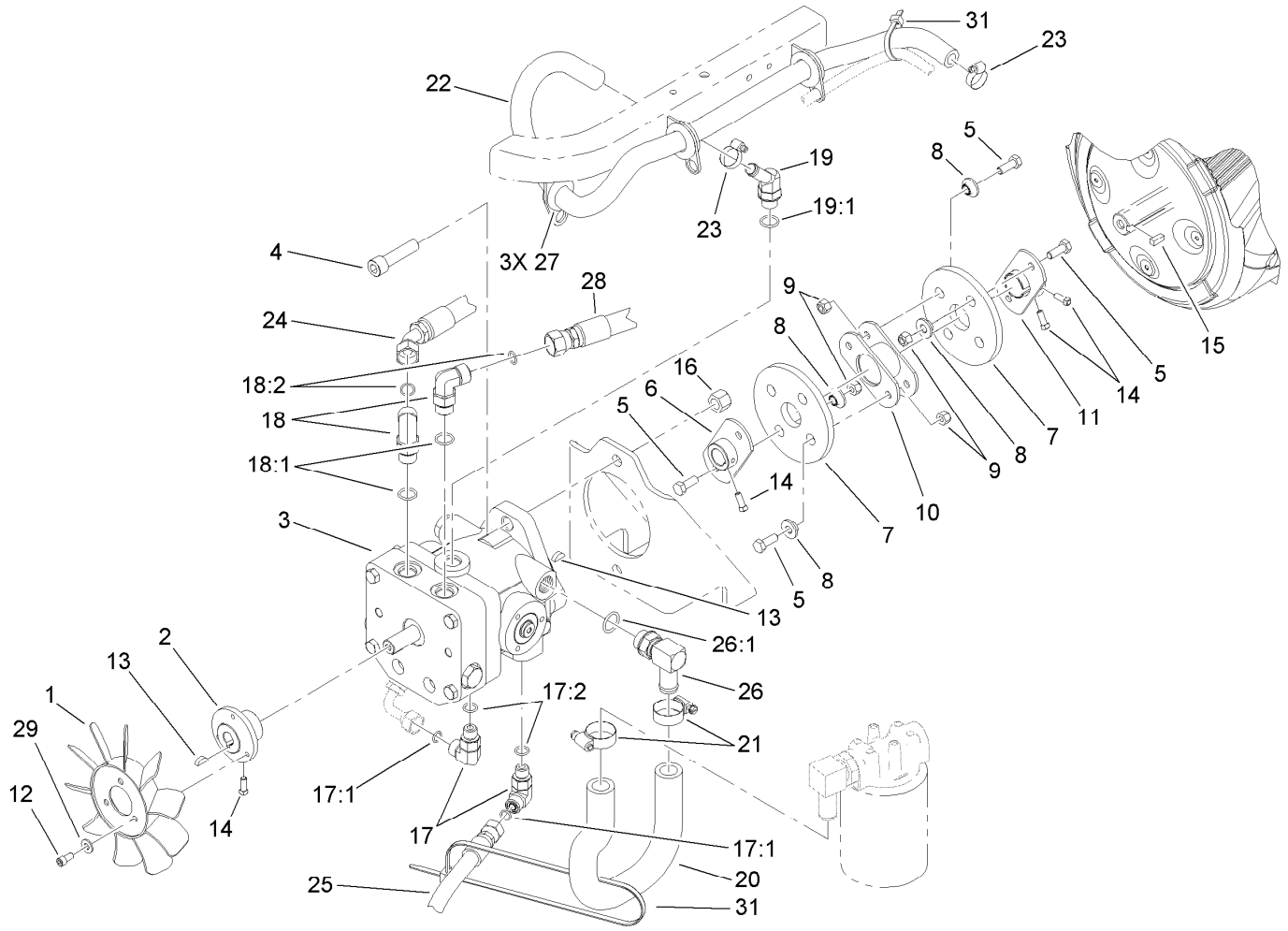

Pump and Coupling Assembly

Ref.	Part Number	Qty.	Description
1	1-633869	1	Fan-Pump, Cooling
2	108-5484	1	Hub-Fan
3	114-0612	1	Variable Piston Pump ASM
4	3274-5	2	Screw-HSH
5	322-4	8	Screw-HH
6	85-8700	1	Hub-Pump
7	80-8650	2	Coupling-Drive
8	27-6600	8	Spacer-Coupling
9	3296-47	8	Nut-Lock, NI
10	85-8770	1	Coupling
11	85-8730	1	Hub-Engine
12	3274-52	3	Screw-HSH
13	3257-32	2	Key-Woodruff
14	3241-7	6	Screw-SQH
15	85-9020	1	Key-Square
16	3296-23	2	Nut-Lock, NI
17	340-77	2	Fitting-HYD, 90 DEG
17:1	237-22	1	O-Ring
17:2	237-42	1	O-Ring
18	340-98	2	Fitting-HYD, 90 DEG
18:1	237-79	1	O-Ring
18:2	237-30	1	O-Ring
19	354-126	1	Fitting-HYD, 45 DEG
19:1	237-79	1	O-Ring
20	108-5481	1	Hose-Suction
21	2412-129	2	Clamp-Hose
22	110-1325	1	Hose-Return
23	2412-36	2	Clamp-Hose
24	108-8440	1	Hose ASM
25	108-8428	1	HYD Hose ASM
26	87-8170	1	Fitting
26:1	237-80	1	O-Ring
27	240-4	3	Grommet-Rubber
28	110-1322	1	HYD Hose ASM
29	3256-22	3	Washer-Flat
31	3290-379	2	Tie-Cable

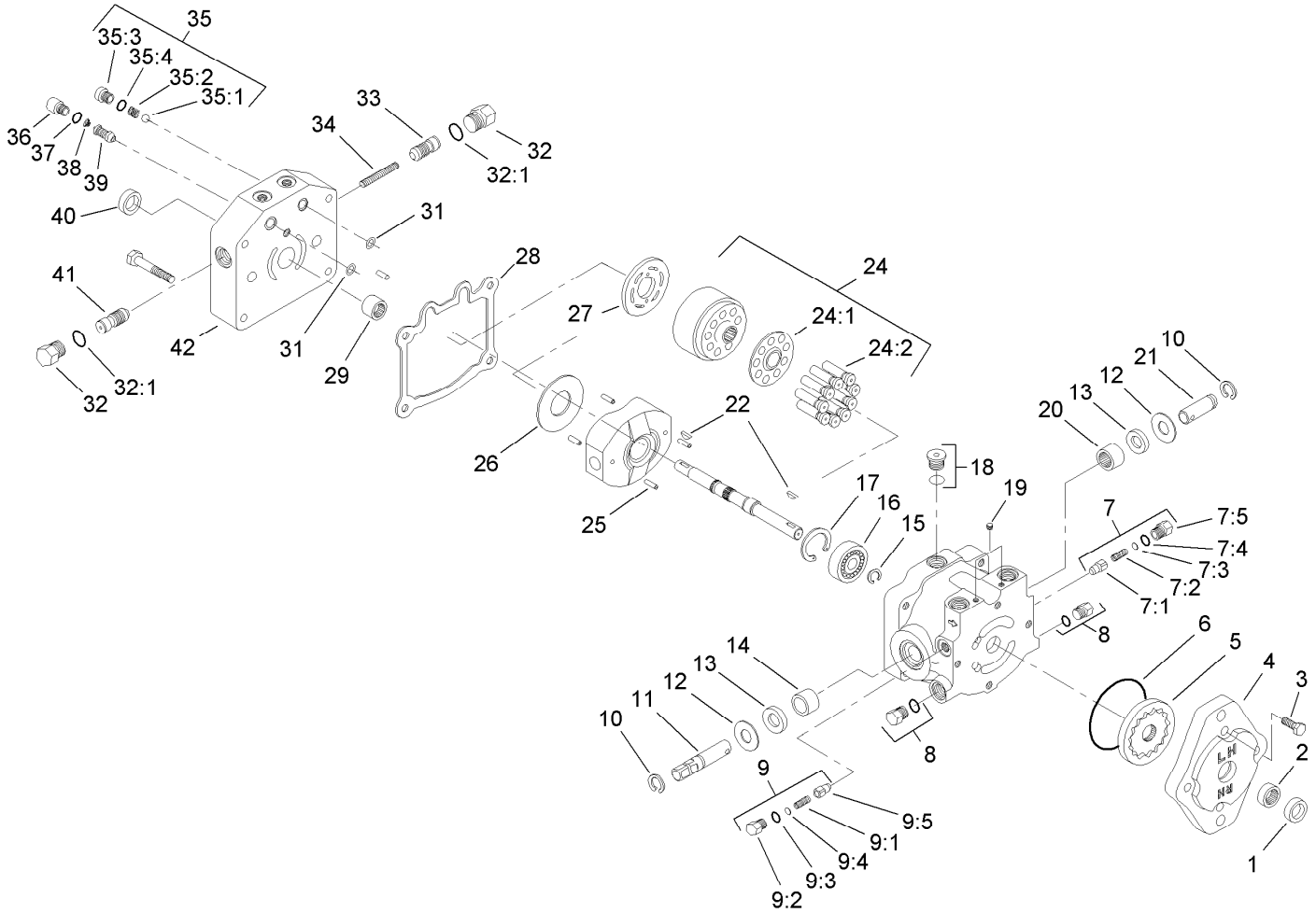

Variable Piston Pump Assembly No. 114-0612

Ref.	Part Number	Qty.	Description
1	110-6337	1	Seal-Lip
2	67-8050	1	Bearing-Needle
3	322-4	4	Screw-HH
4	114-0611	1	Housing-Pump, Charge
5	95-5812	1	Gerotor ASM
6	237-95	1	O-Ring
7	49-8520	1	Implement Relief Kit
7:1	83-7260	1	Cone-Relief, Charge
7:2	25-2570	1	Spring-Valve
7:3	25-2470	1	Pack-Shim
7:4	237-86	1	O-Ring
7:5	25-2460	1	Plug-HH
8	67-8030	2	Plug ASM
9	49-8510	1	Valve Kit
9:1	25-2480	1	Spring-Valve
9:2	25-2460	1	Plug-HH
9:3	237-86	1	O-Ring
9:4	25-2470	1	Pack-Shim
9:5	83-7260	1	Cone-Relief, Charge
10	32151-46	2	Ring-Retaining
11	88-8180	1	Shaft-Trunnion
12	25-2510	2	Washer-Flat
13	103461	2	Seal
14	88-8190	1	Bearing-Journal
15	94-3996	1	Ring-Retaining
16	95-5809	1	Bearing-Ball
17	32151-75	1	Ring-Retaining
18	94-9172	1	Plug
19	75-0160	1	Plug-Pipe
20	110-6339	1	Bearing-Needle
21	88-8200	1	Shaft-Trunnion
22	3257-32	2	Key-Woodruff
24	48-1800	1	Cylinder Block Kit
24:1		1	Retainer-Slipper ●
24:2		9	Piston ASM ●
25	32121-91	4	Pin-Spring
26	25-2510	1	Washer-Flat
27	88-8160	1	Plate-Valve
28	25-2400	1	Gasket
29	110-6341	1	Bearing-Roller
31	112-7652	2	O-Ring
32	28-3440	1	Plug-Threaded
32:1	75-0240	1	O-Ring
33	98-0920	1	Valve-Acceleration
34	25-2610	1	Spring-Valve
35	99-5689	1	Check Valve Kit
35:1	25-2490	1	Ball
35:2	25-2640	1	Spring-Valve
35:3	25-2650	1	Plug-Valve, Check
35:4	237-86	1	O-Ring

● Not serviced separately

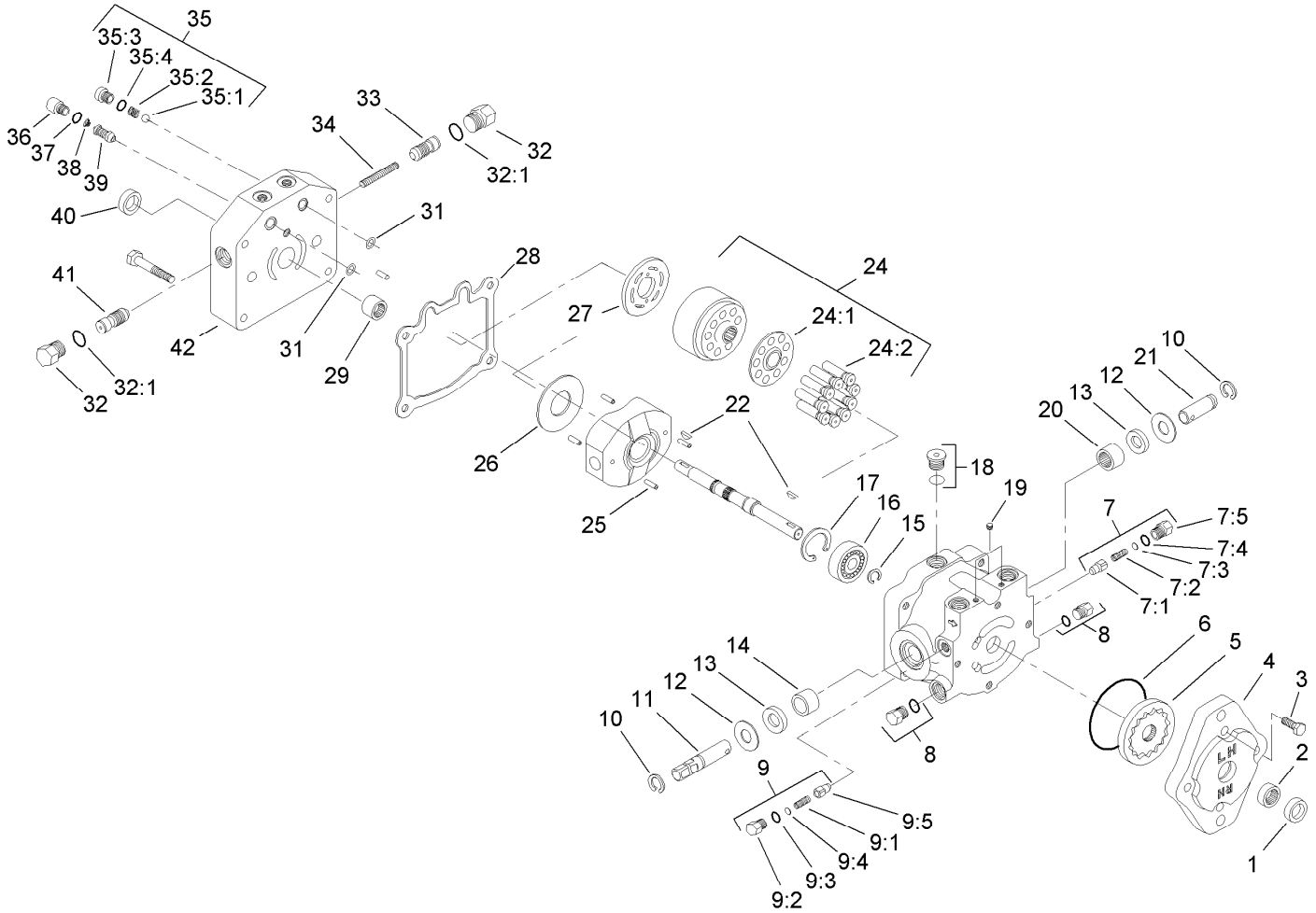

Variable Piston Pump Assembly No. 114-0612 (continued)

Ref.	Part Number	Qty.	Description
36	75-0190	1	Plug-Special
37	75-0240	1	O-Ring
38	110-6342	1	Spring
39	110-6343	1	Valve-Scr

Ref.	Part Number	Qty.	Description
40	88-8230	1	Seal-Lip
41	98-0920	1	Valve-Acceleration
42	112-7651	1	Cap-End

● Not serviced separately

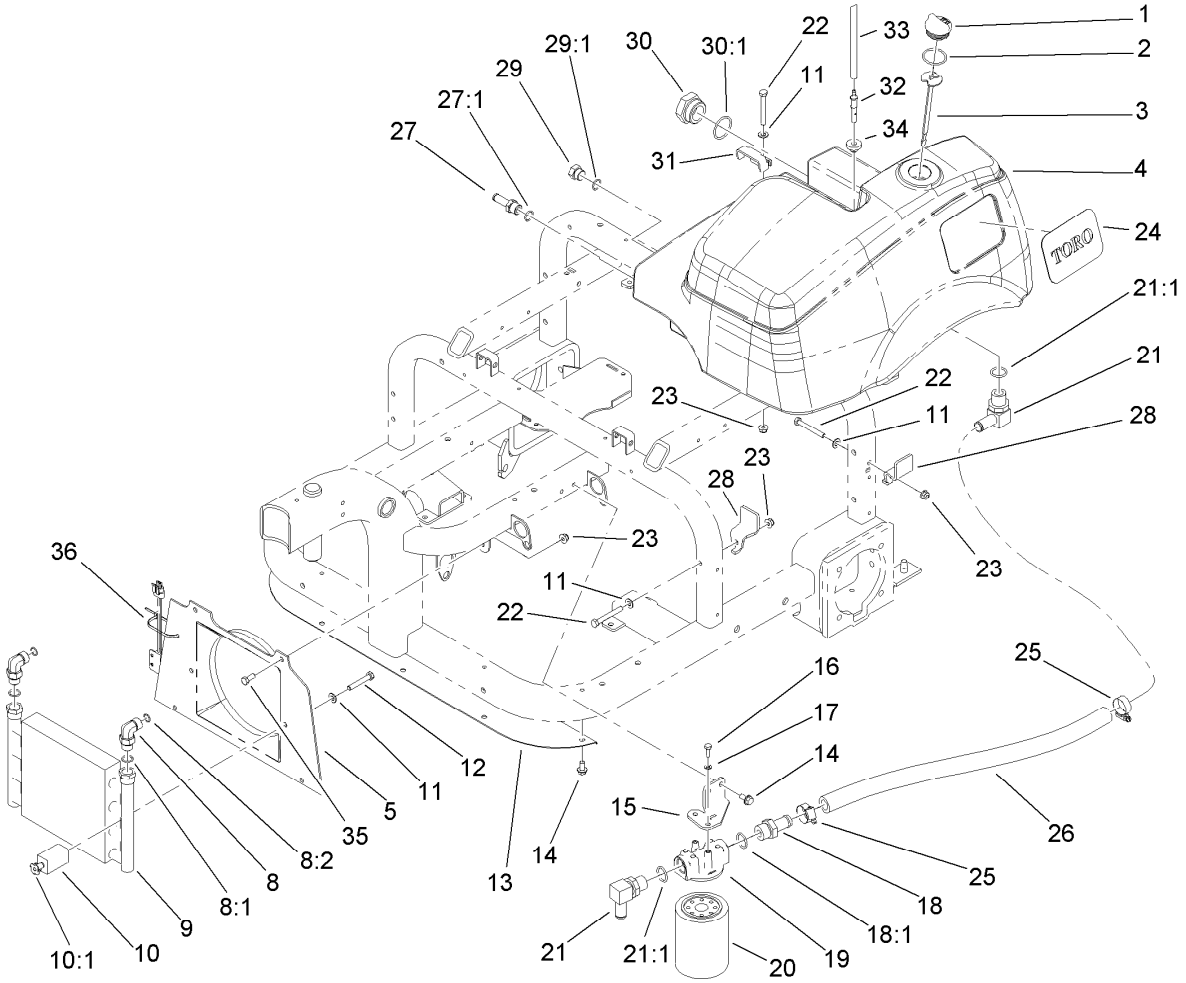

Hydraulic Tank, Filter and Cooler Assembly

Ref.	Part Number	Qty.	Description
1	93-7498	1	Plug-Plastic
2	237-101	1	O-Ring
3	108-7996	1	Dipstick ASM
4	108-2937	1	Tank-HYD
5	108-5477	1	Shroud-Fan
8	340-98	2	Fitting-HYD, 90 DEG
8:1	237-79	1	O-Ring
8:2	237-30	1	O-Ring
9	108-8457	1	Cooler-Oil
10	85-9550	2	Rubber Clamp ASM
10:1	85-9670	1	T-Nut
11	3256-23	7	Washer-Flat
12	322-10	2	Screw-HH
13	108-5480-03	1	Panel-Cooler
14	32144-14	7	Screw-HWHTF
15	108-5482	1	Bracket-Filter, Oil
16	321-4	2	Screw-HH
17	3253-3	2	Washer-Lock
18	354-73	1	Fitting-Straight
18:1	237-81	1	O-Ring
19	68-8990	1	Filter Head ASM
20	54-0110	1	Filter-Oil, Transmission

Ref.	Part Number	Qty.	Description
21	353-987	2	Fitting-HYD, 90 DEG (Barbed)
21:1	237-81	1	O-Ring
22	322-12	5	Screw-HH
23	104-8300	9	Nut-Flange, NI
24	108-8452	1	Decal-Logo
25	2412-129	2	Clamp-Hose
26	108-5483	1	Hose-Suction, Tank
27	354-121	1	Fitting-Straight
27:1	237-79	1	O-Ring
28	108-7965	2	Clamp-Tank, HYD
29	353-550	1	Plug-HYD, HH
29:1	237-79	1	O-Ring
30	108-8468	1	Plug-HH
30:1	237-101	1	O-Ring
31	108-7903	1	Clamp-Tank
32	110-1372	1	Fitting-Vent, Tank
33	110-8181	1	Hose-Fuel
34	46-6560	1	Bushing
35	322-3	4	Screw-HH
36	3290-379	1	Tie-Cable

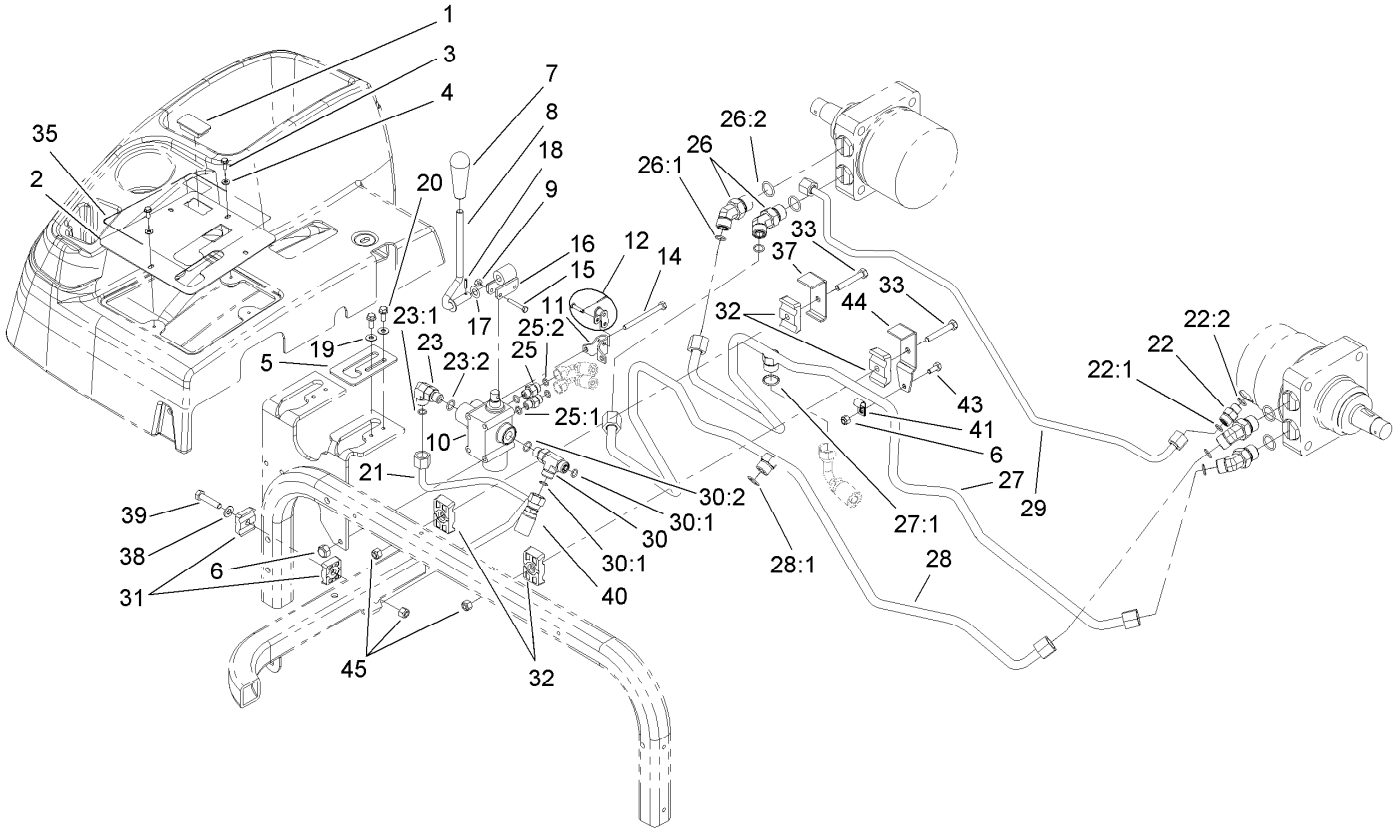

Lift Valve and Rear Tube Assembly

Ref.	Part Number	Qty.	Description
1	99-7420	1	Plug-Hole
2	108-7909-03	1	Panel-Control
3	3290-321	4	Screw-HWH
4	3256-51	4	Washer-Flat
5	108-7941	1	Plate-Guide, Lever
6	3296-42	4	Nut-Lock, NI
7	98-0152	1	Knob-Tapered
8	108-7942	1	Rear Lever ASM
9	3296-2	2	Nut-Lock, NI
10	43-1710	1	Valve ASM
11	88-8480	1	Bracket-Pivot
12	2710-20	1	Link-Offset
14	321-23	3	Screw-HH
15	3290-360	2	Screw-HH
16	98-8159	1	Pivot
17	3290-477	1	Washer-Curved
18	32121-73	1	Pin-Roll
19	3256-1	2	Washer-Flat
20	3234-33	2	Screw-HHF
21	108-8416	1	Tube ASM
22	340-2	1	Fitting-HYD, Straight
22:1	237-22	1	O-Ring
22:2	237-42	1	O-Ring
23	340-77	1	Fitting-HYD, 90 DEG
23:1	237-22	1	O-Ring
23:2	237-42	1	O-Ring

Ref.	Part Number	Qty.	Description
25	340-92	2	Fitting-HYD, Straight
25:1	237-78	1	O-Ring
25:2	237-21	1	O-Ring
26	340-89	4	Fitting-HYD, 45 DEG
26:1	237-30	1	O-Ring
26:2	237-80	1	O-Ring
27	108-8406	1	Tube ASM
27:1	237-30	1	O-Ring
28	110-1323	1	Tube ASM
28:1	237-30	1	O-Ring
29	110-1330	1	Tube ASM
30	340-86	1	Fitting-Tee
30:1	237-22	2	O-Ring
30:2	237-42	1	O-Ring
31	56-7973	2	Clamp-Tube
32	56-7976	4	Clamp-Tube
33	322-10	2	Screw-HH
35	108-8484	1	Decal-Lift, Rear
37	110-1333	1	Bracket-Clamp
38	3256-23	1	Washer-Flat
39	322-7	1	Screw-HH
40	108-8426	1	Hose ASM
41	2412-89	1	Clamp-R
43	321-3	1	Screw-HH
44	110-1332	1	Bracket-Clamp
45	3296-29	3	Nut-Lock, NI

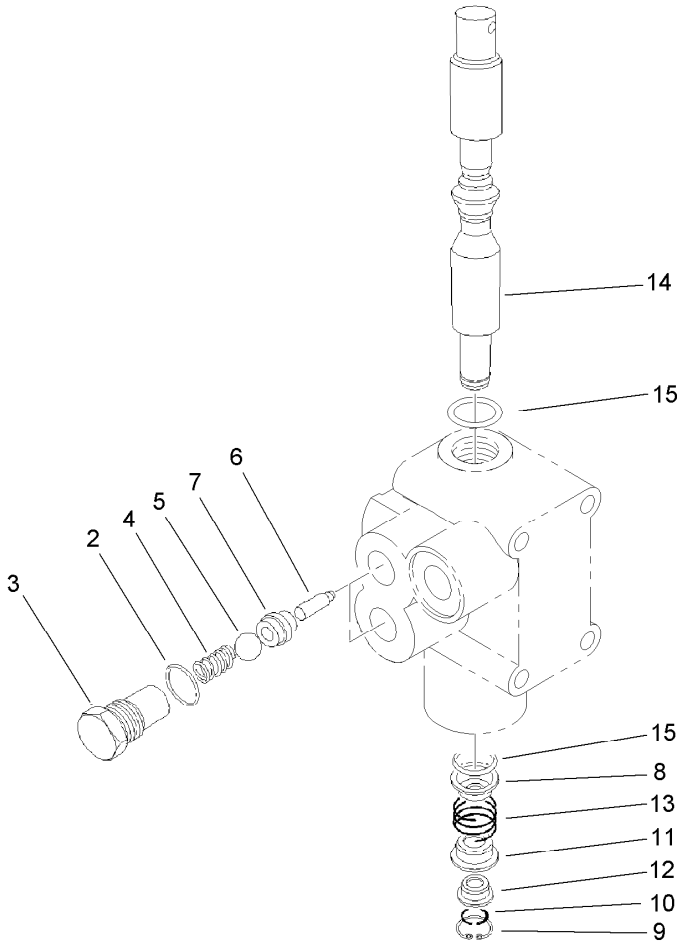

Valve Assembly No. 43-1710

Ref.	*Part Number*	*Qty.*	*Description*
2	237-42	2	O-Ring
3	22-8330	2	Plug
4	22-8340	2	Spring
5	22-8350	2	Ball
6	22-8360	2	Pin
7	22-8370	2	Seat-Valve
8	22-8380	1	Retainer
9	22-8490	1	Ring-Snap
10	22-8480	1	Ring-Snap
11	22-8390	1	Retainer
12	22-8400	1	Spacer
13	22-8410	1	Spring
14	22-8420	1	Spool
15	22-8500	2	O-Ring

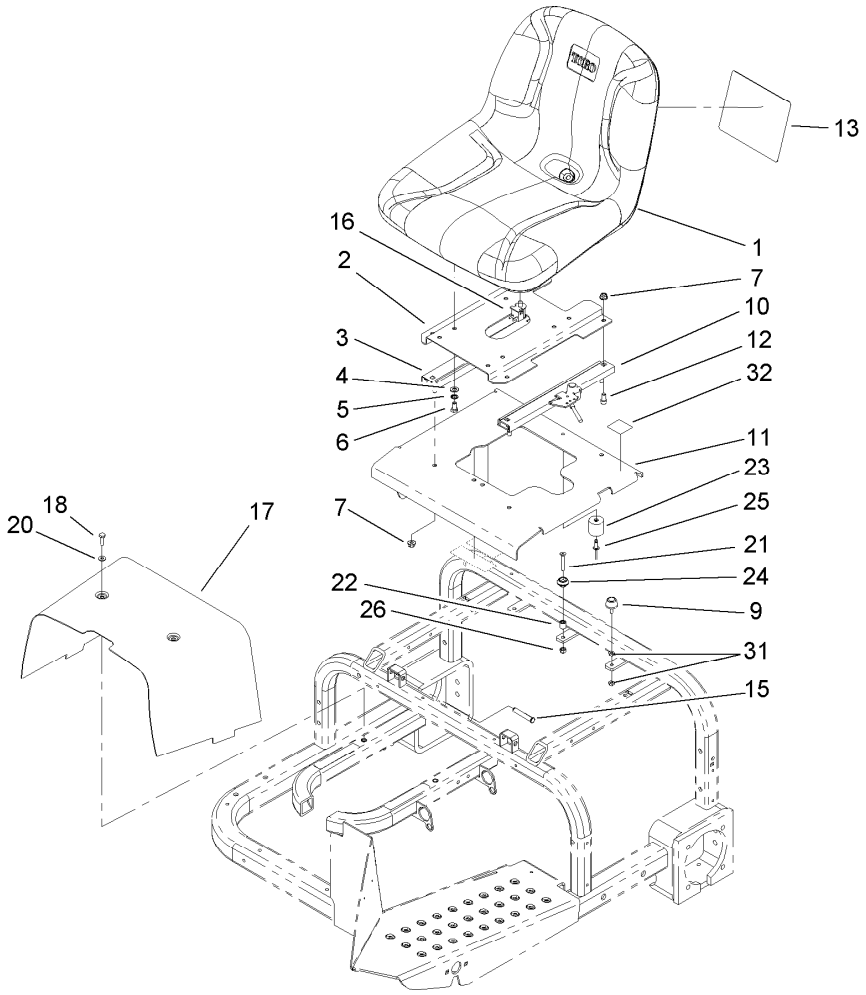

Seat and Shroud Assembly

Ref.	Part Number	Qty.	Description
1	108-6878	1	Seat
2	108-7931-03	1	Base-Seat
3	51-0780	1	Slider-Seat
4	3256-23	4	Washer-Flat
5	3254-2	4	Washer-Lock, Internal
6	322-2	4	Screw-HH
7	104-8300	8	Nut-Flange, NI
9	1-523420	2	Bumper
10	51-0790	1	Adjuster-Seat, LH
11	112-1445-03	1	Seat ASM
12	3274-12	4	Screw-HSH
13	108-8418	1	Decal-Service
15	112-7153	2	Pin

Ref.	Part Number	Qty.	Description
16	82-2190	1	Switch-Bail
17	108-6859-01	1	Shroud-Center
18	321-5	2	Screw-HH
20	3256-1	2	Washer-Flat
21	32108-9	1	Screw-FH
22	609588	1	Spacer
23	99-7830	1	Rubber Receptical ASM
24	99-7833	1	Post-Holding
25	3290-412	1	Rivet
26	3296-42	1	Nut-Lock, NI
31	3218-1	4	Nut-Jam
32	105-2699	1	Decal-Noise

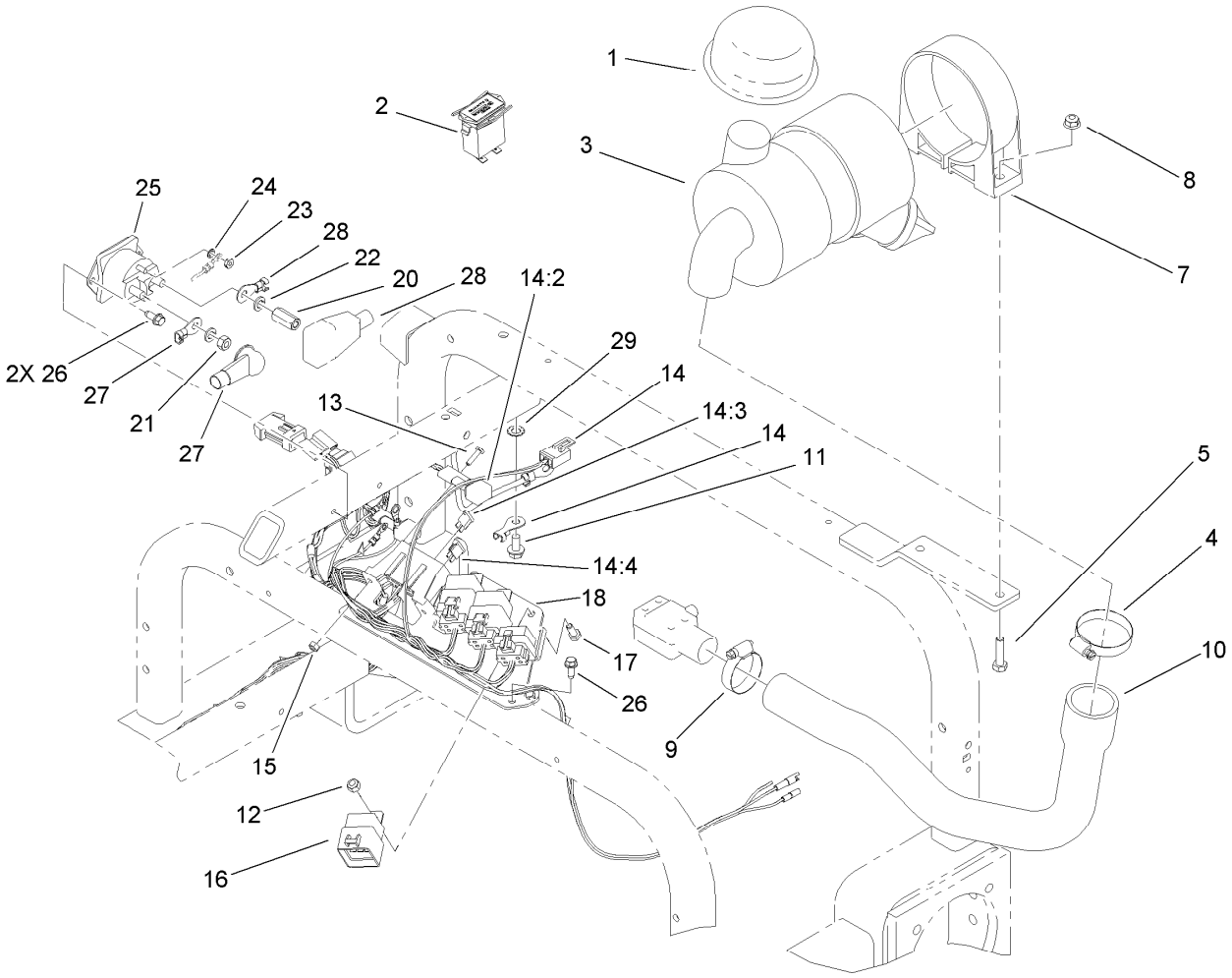

Wire Harness, Air Cleaner and Hose Assembly

Ref.	Part Number	Qty.	Description
1	46-7510	1	Hood-Inlet, Air
2	1-513374	1	Meter-Hour
3	93-2190	1	Air Cleaner ASM
4	2412-92	1	Clamp-Hose
5	322-6	2	Screw-HH
7	95-5806	1	Bracket-Mounting
8	104-8300	2	Nut-Flange, NI
9	2412-3	1	Clamp-Hose
10	108-8401	1	Hose-Air
11	32144-14	1	Screw-HWHTF
12	3296-42	3	Nut-Lock, NI
13	3250-13	2	Screw-PPH
14	112-1446	1	Harness-Wire
14:2	100-4918	2	Diode
14:3	218-578	1	Fuse-Blade, 10 Amp
14:4	109355	1	Fuse-Blade, 15 Amp
15	3296-2	2	Nut-Lock, NI
16	99-7430	3	Relay
17	321-3	3	Screw-HH
18	112-1444-01	1	Bracket-Relay
20	110-3380	1	Nut-Standoff
21	3218-13	1	Nut-Jam, Brass
22	3253-4	2	Washer-Lock
23	3219-14	2	Nut-Hex
24	3254-1	2	Washer-Lock, Int
25	28-4210	1	Solenoid
26	32144-10	4	Screw-HWH
27	110-3315	1	Cable-Positive, Starter
28	110-3314	1	Cable-Positive, Battery
29	3255-9	1	Washer-Lock

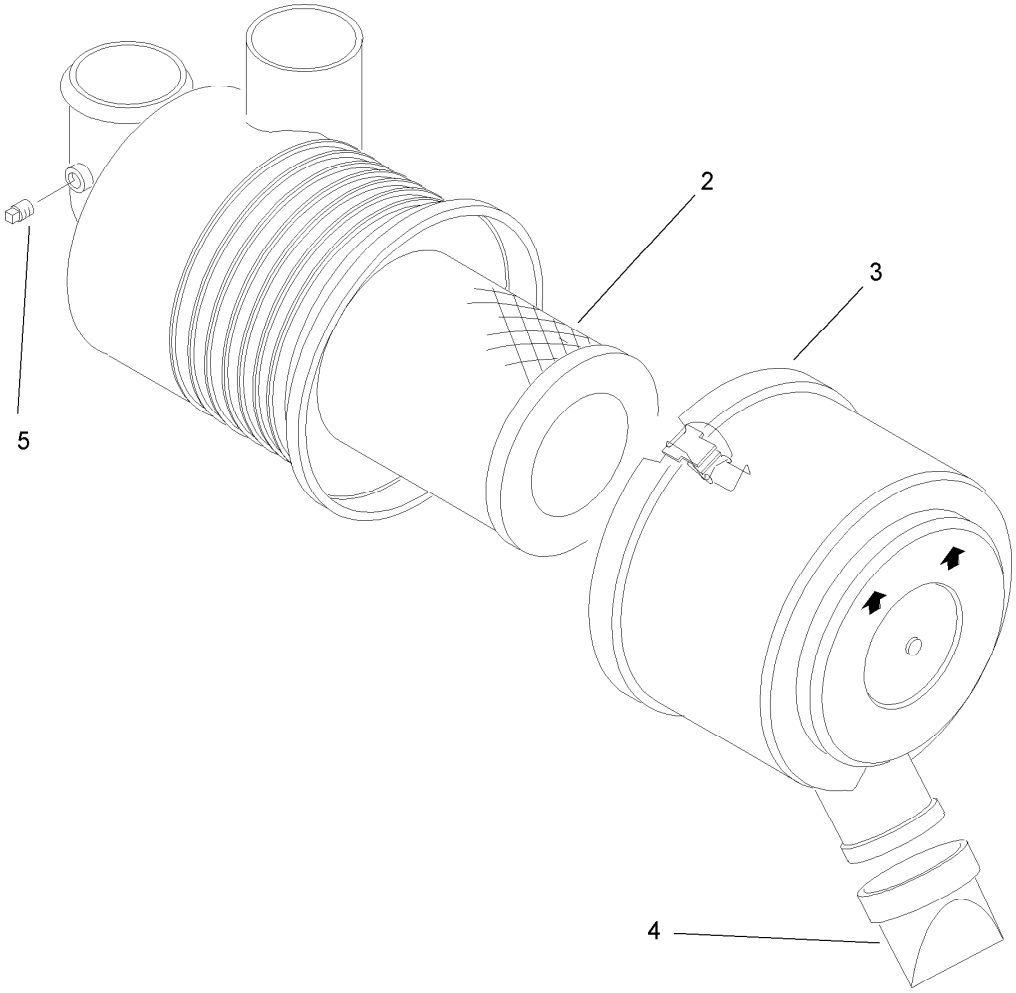

Air Cleaner Assembly No. 93-2190

Ref.	*Part Number*	*Qty.*	*Description*
2	108-3811	1	Filter-Air
3	94-3652	1	Cover ASM
4	87-9400	1	Valve-Vacuator
5	285-17	1	Plug-Pipe

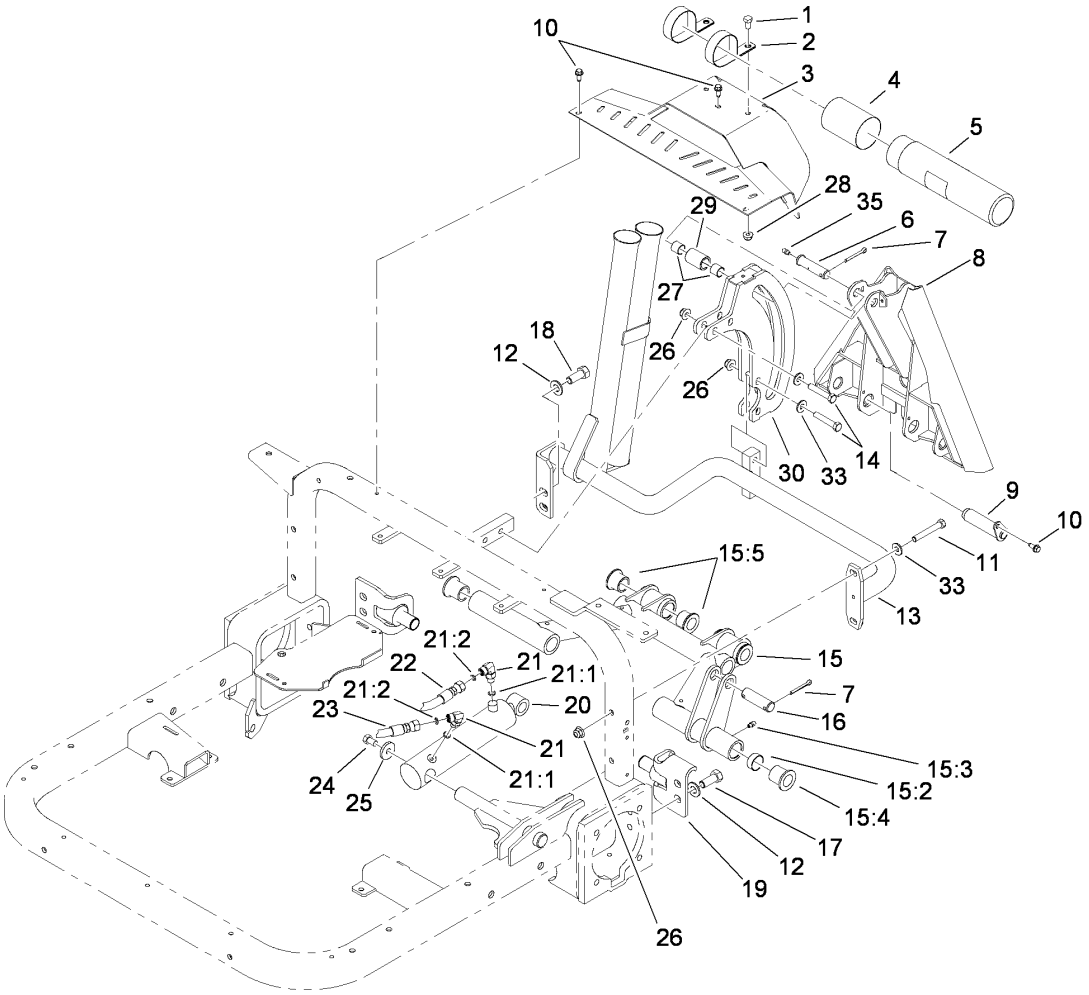

Rear Hitch Assembly

Ref.	Part Number	Qty.	Description
1	322-2	2	Screw-HH
2	2412-133	2	R-Clamp
3	108-7970-01	1	Rear Cover ASM
4	104-7048	1	Cap-Housing
5	104-7050	1	Tube-Manual
6	108-2282	1	Pin-Clevis
7	3272-23	3	Pin-Cotter
8	108-6870-01	1	Adapter ASM
9	108-6885	2	Pin ASM
10	32144-10	5	Screw-HWH
11	323-12	2	Screw-HH
12	3256-26	4	Washer-Flat
13	108-6860-03	1	Hitch Frame ASM
14	323-10	4	Screw-HH
15	110-3375	1	Rear Tube ASM
15:2	110-3365	2	Plug-Expansion
15:3	302-5	4	Fitting-Grease
15:4	95-3577	2	Bushing
15:5	33-3090	4	Bushing

Ref.	Part Number	Qty.	Description
16	18-7310	1	Pin-Cylinder
17	325-4	2	Screw-HH
18	325-5	2	Screw-HH
19	114-0619	2	Pivot Pin ASM
20	110-1338	1	Hydraulic Cylinder ASM
21	340-132	2	Fitting-HYD, 90 DEG
21:1	237-78	1	O-Ring
21:2	237-21	1	O-Ring
22	95-8837	1	Hose ASM
23	100-3833	1	HYD Hose ASM
24	323-34	1	Screw-HH
25	53-6380	1	Washer-Flat
26	104-8301	6	Nut-Flange, NI
27	256-311	2	Bushing-Split
28	104-8300	2	Nut-Flange, NI
29	108-6871	1	Tube-Roller
30	110-1368-01	1	Roller Plate ASM
33	3256-3	6	Washer-Flat
35	302-5	1	Fitting-Grease

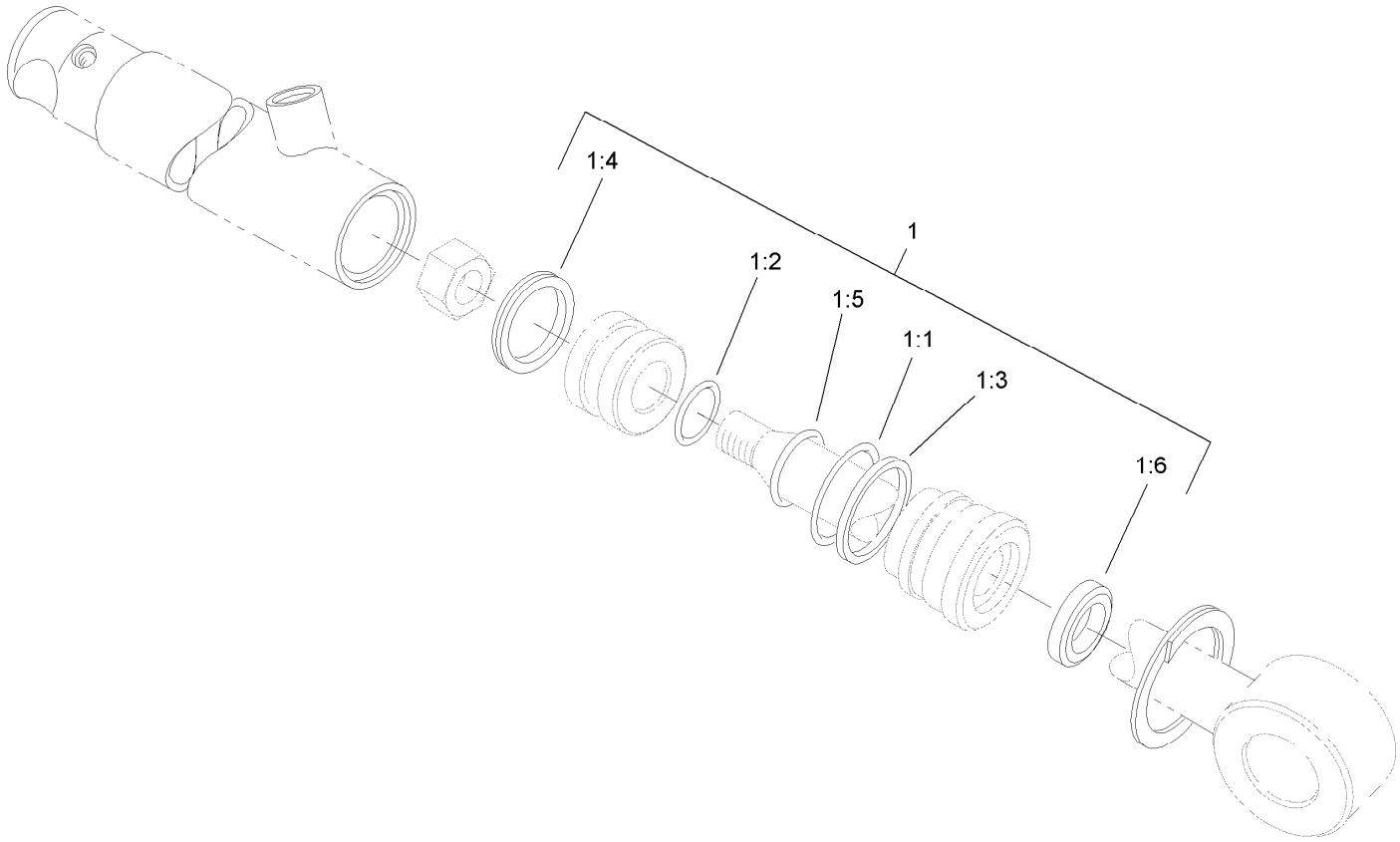

Hydraulic Cylinder Assembly No. 110-1338

Ref.	*Part Number*	*Qty.*	*Description*
1	108-4597	1	Seal Kit
1:1		1	O-Ring ●
1:2		1	O-Ring ●
1:3		1	Ring-Back Up ●
1:4		1	Seal-Psp ●
1:5		1	Seal-Rod ●
1:6		1	Seal-Dust ●

● Not serviced separately

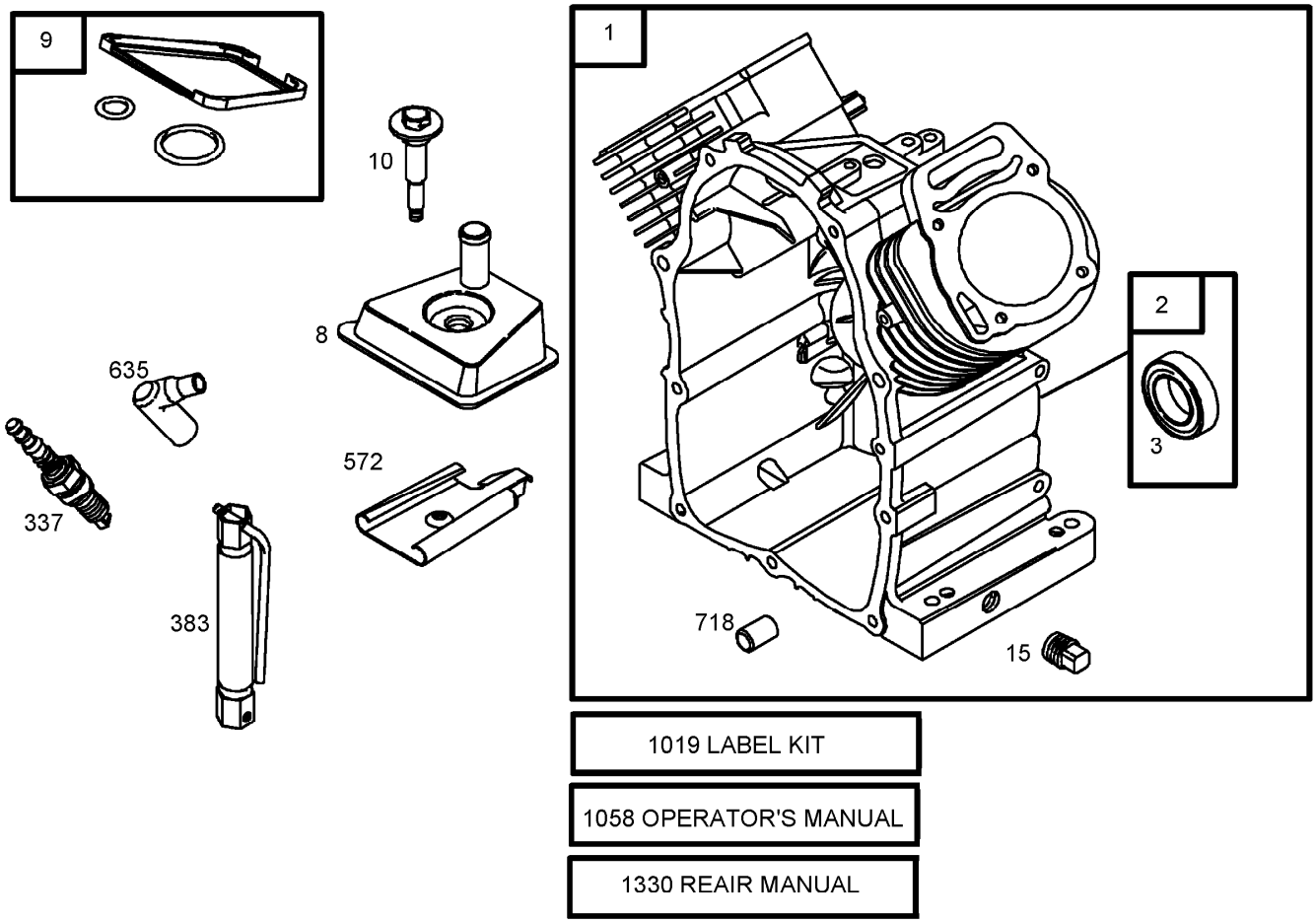

Cylinder Assembly
Briggs and Stratton 305447-0178-E1

Ref.	*Part Number*	*Qty.*	*Description*
1	692178	1	Cylinder ASM ●
2	808534	1	Bushing-Seal Kit ●
3	805101	1	Seal-Oil ● ■
8	808984	1	Breather ASM ●
9	809094	1	Gasket-Breather ●
10	690751	1	Screw ●
15	690946	1	Plug-Drain, Oil ●
337	496018	1	Spark Plug ●
383	19374	1	Wrench-Spark Plug ●
572	690686	1	Baffle-Breather ●
635	692076	1	Boot-Spark Plug ●
718	806469	1	Pin-Locating ●
1019	809181	1	Kit-Label ●
1058	276343	1	Operator Manual ●
1330	272144	1	Repair Manual ●

● Obtain parts from www.briggsandstratton.com

■ Included in Engine Gasket Set (Ref. No. 358)

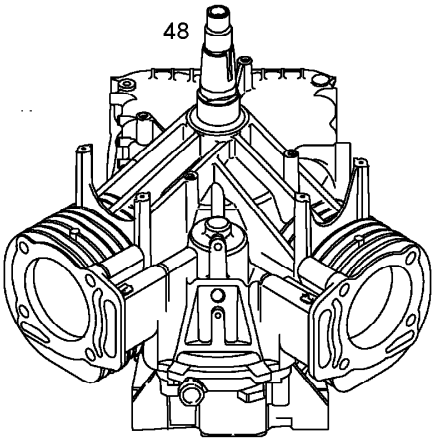

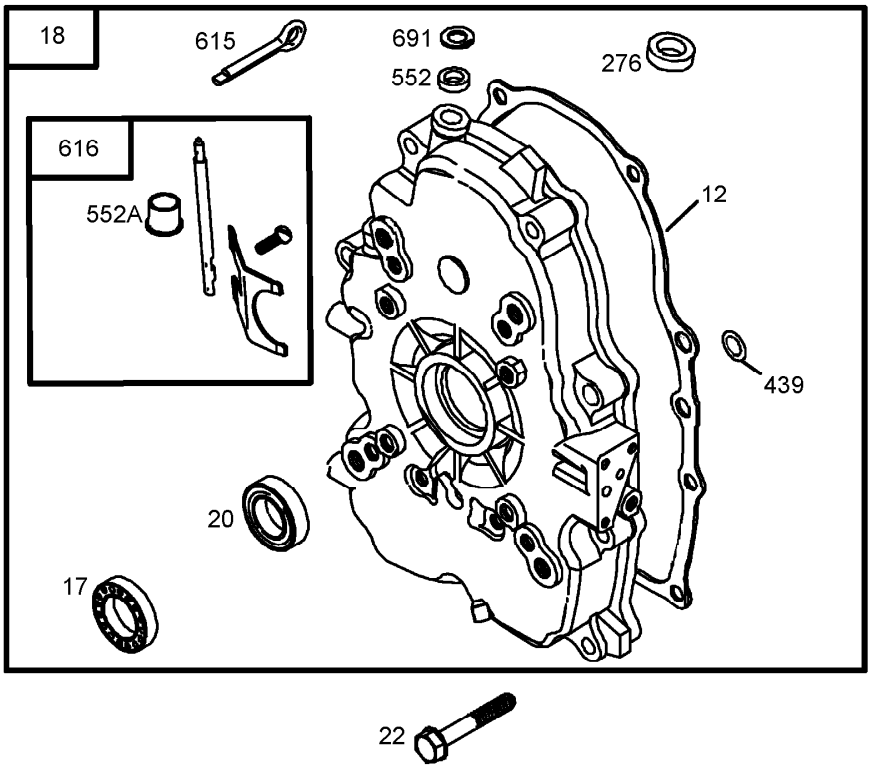

Crankcase Assembly
Briggs and Stratton 305447-0178-E1

Ref.	Part Number	Qty.	Description
12	842589	1	Gasket-Crankcase ● ■
17	690752	1	Bearing-Ball ●
18	808847	1	Cover-Crankcase ●
20	805049	1	Seal-Oil ● ■
22	807362	1	Screw ●
48		1	Short Block (Part No. Not Available At Time Of Printing) ●
276	690724	1	Washer-Sealing ●
439	692154	1	Seal-O Ring ● ■
552	690701	1	Bushing-Crank, Governor ●
552A	806686	1	Bushing-Crank, Governor ●
615	691550	1	Retainer-Shaft, Governor ●
616	806685	1	Crank-Governor ●
691	690680	1	Seal-Shaft, Governor ● ■

● Obtain parts from www.briggsandstratton.com

■ Included in Engine Gasket Set (Ref. No. 358)

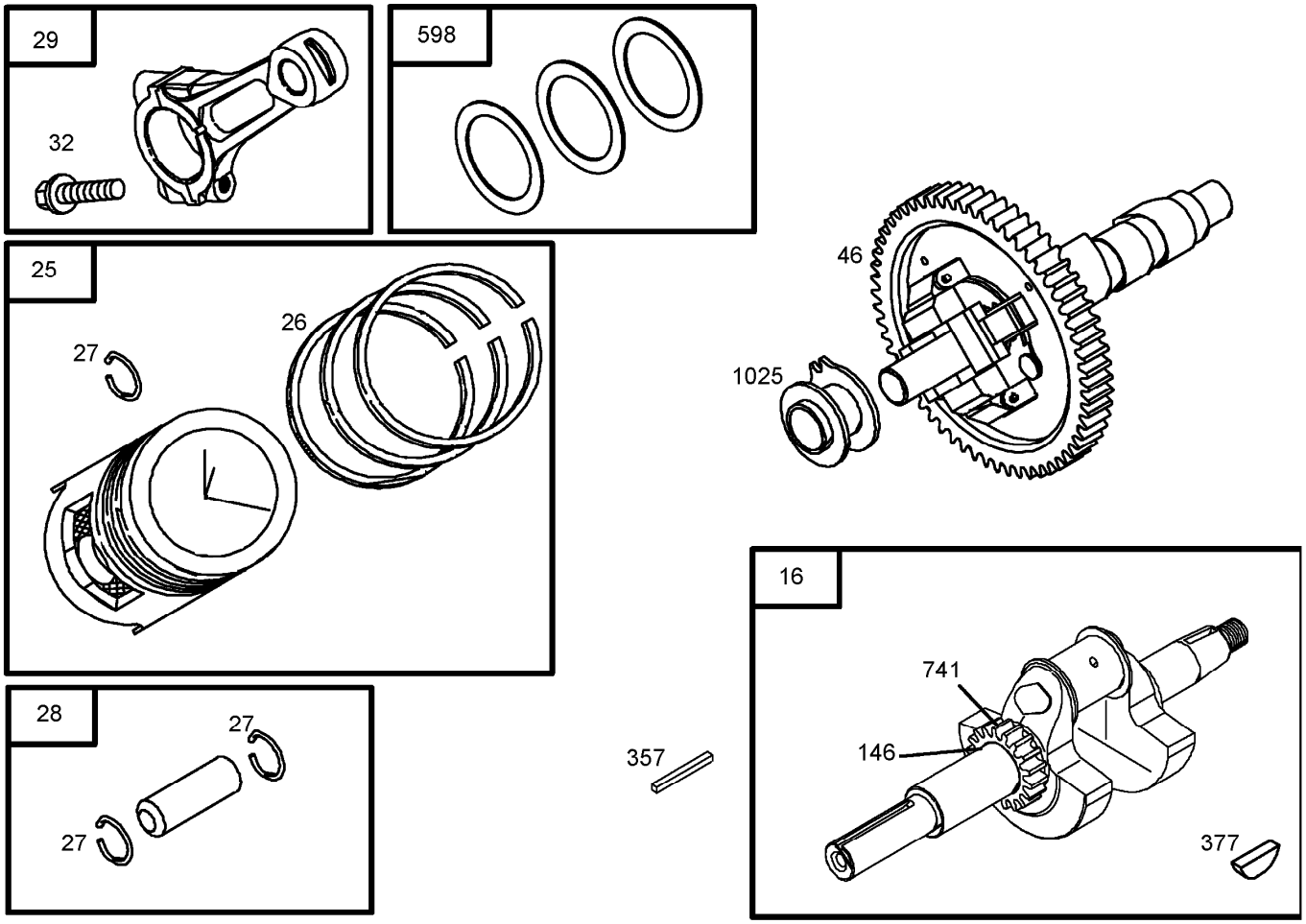

Crankshaft Assembly
Briggs and Stratton 305447-0178-E1

Ref.	*Part Number*	*Qty.*	*Description*
16	692168	1	Crankshaft ●
25	807619	1	Piston ASM (Standard) ●
25	807809	1	Piston ASM (.020 Oversize) ●
26	807620	1	Ring Set (Standard) ●
26	807810	1	Ring Set (.020 Oversize) ●
27	690683	1	Lock-Pin, Piston ● ●
28	807621	1	Pin-Piston ●
29	807900	1	Rod-Connecting (Standard) ●
29	807803	1	Rod-Connecting (.020 Undersize) ●
32	690698	1	Screw ●
46	691557	1	Camshaft ●
146	691639	1	Key-Timing ●
357	691483	1	Key pulley , Drive ●
377	808095	1	Key-Woodruff ●
598	807625	1	Shim-Play, End ●
741	691530	1	Gear-Timing ●
1025	690689	1	Spool-Governor ●

● Obtain parts from www.briggsandstratton.com

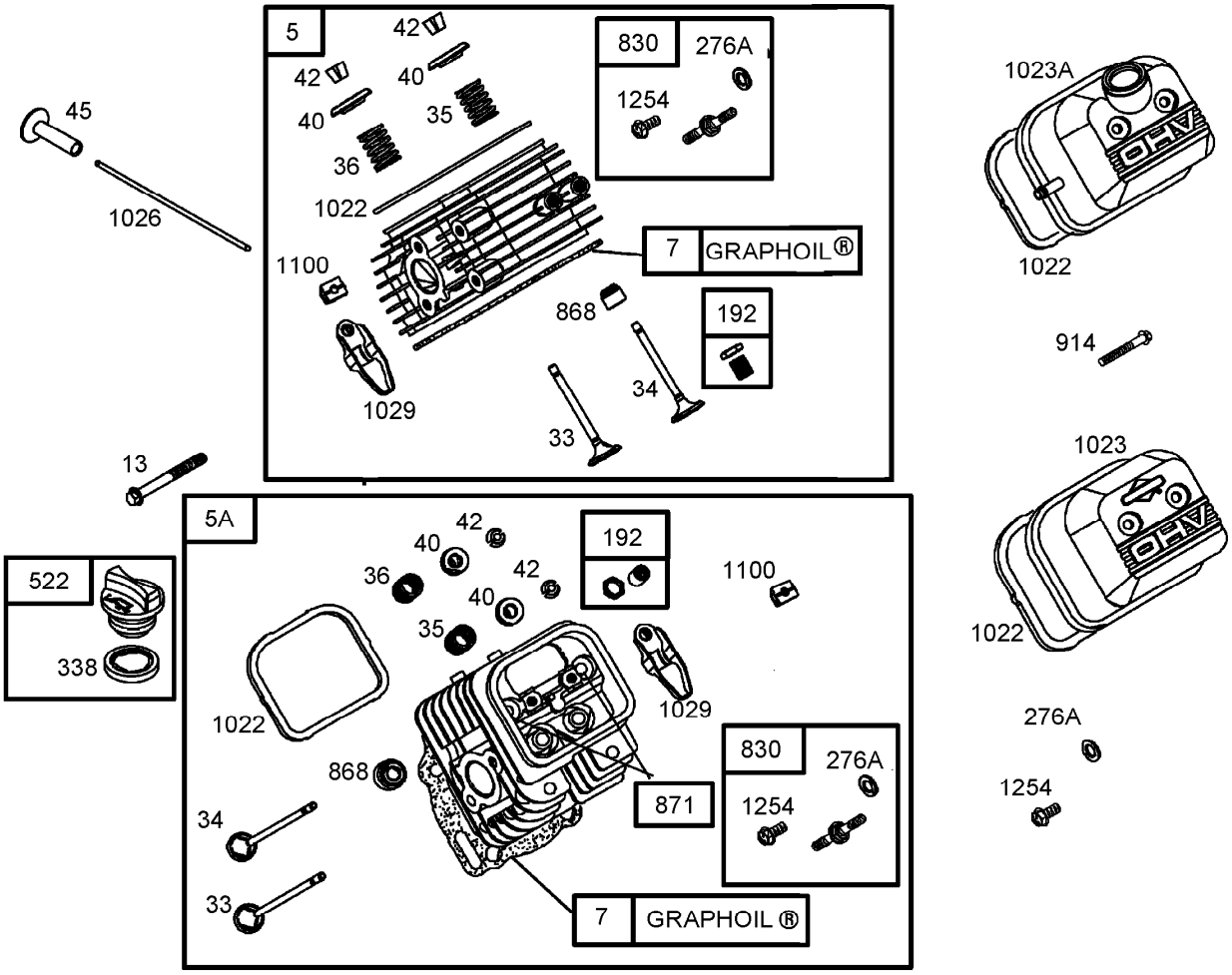

Cylinder Head Assembly
Briggs and Stratton 305447-0178-E1

Ref.	Part Number	Qty.	Description
5	809200	1	Head-Cylinder ●
5A	809201	1	Head-Cylinder ●
7	806085	1	Gasket-Head, Cylinder ●■▲
13	692059	1	Screw ●
33	807681	1	Valve-Exhaust ●
34	807680	1	Valve-Intake ●
35	692084	1	Spring-Valve ●
36	692084	1	Spring-Valve ●
40	692058	1	Retainer-Valve ●
42	807683	1	Keeper-Valve ●
45	690977	1	Tappet-Valve ●
192	807623	1	Adjuster-Arm, Rocker ●
276A	807085	1	Washer-Sealing ●■▲
338	691312	1	Seal-O Ring ●■▲

Ref.	Part Number	Qty.	Description
522	491832	1	Plug-Fill, Dipstick ●
830	809157	1	Stud-Arm, Rocker ●
868	691963	1	Seal-Valve ●■▲
871	692057	1	Bushing-Guide, Valve ●
914	807120	1	Screw ●
1022	806039	1	Gasket-Cover, Rocker ●■▲
1023	691494	1	Cover-Valve ●
1023A	690910	1	Cover-Valve ●
1026	691836	1	Rod-Push ●
1026	691758	1	Rod-Push ●
1029	807323	1	Arm-Rocker ●
1100	791959	1	Pivot-Arm, Rocker ●
1254	807084	1	Screw ●

● Obtain parts from www.briggsandstratton.com
▲ Included in Valve Gasket Set (Ref. No. 1095)
■ Included in Engine Gasket Set (Ref. No. 358)

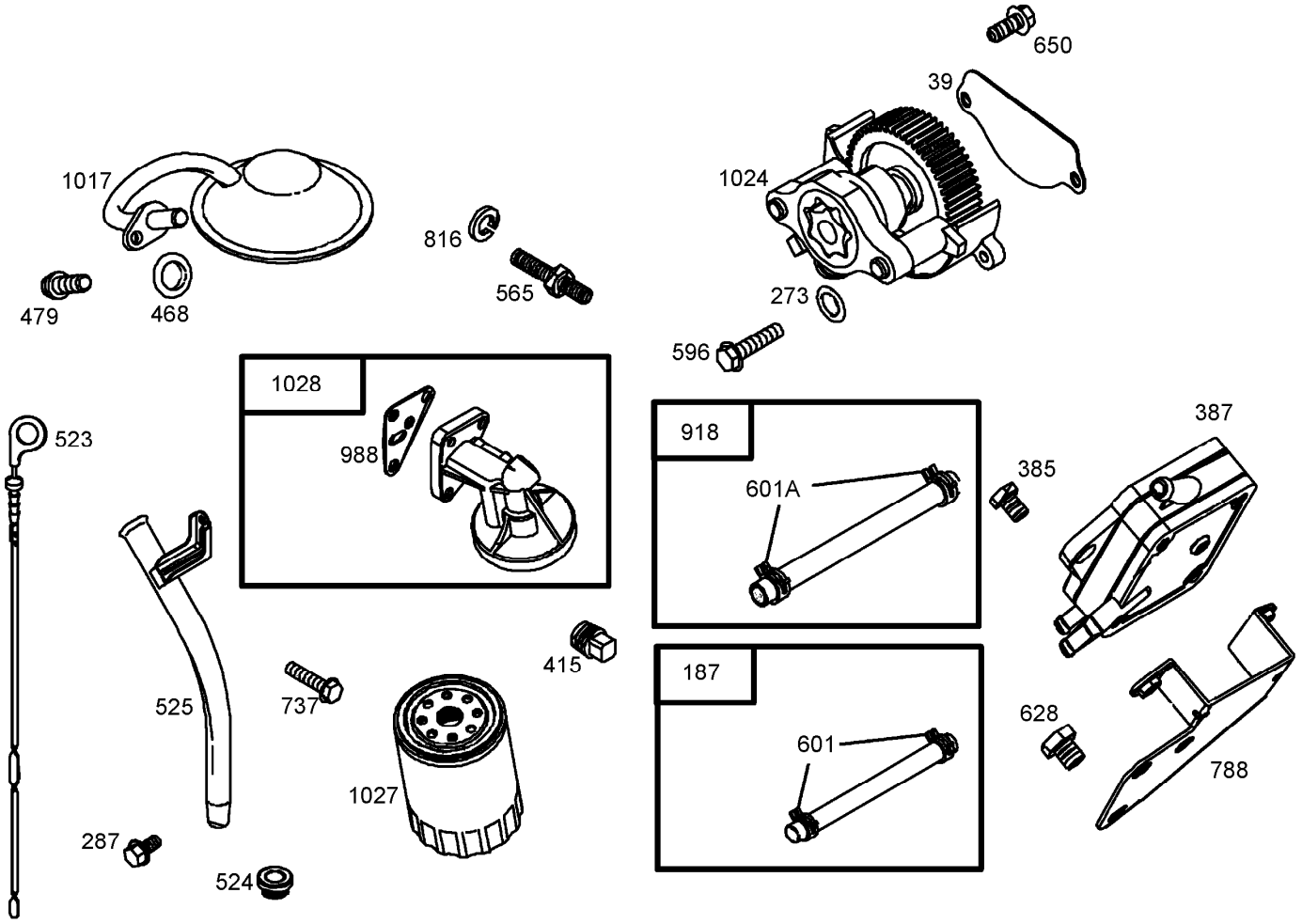

Oil Filter, Tube and Pump Assembly
Briggs and Stratton 305447-0178-E1

Ref.	Part Number	Qty.	Description
39	690745	1	Deflector-Oil ●
187	791766	1	Line-Fuel ●
273	690681	1	Seal-O Ring ● ■
287	692062	1	Screw ●
385	807084	1	Screw ●
387	808969	1	Pump-Fuel ●
415	690283	1	Plug-Oil ●
468	690690	1	Seal-O Ring ● ■
479	807084	1	Screw ●
523	693175	1	Dipstick ●
524	693172	1	Seal-Tube, Dipstick ● ■
525	693174	1	Tube-Dipstick ●
565	690682	1	Stud ●
596	691492	1	Screw ●

Ref.	Part Number	Qty.	Description
601	791850	1	Clamp-Hose ●
601A	691038	1	Clamp-Hose ●
628	692062	1	Screw ●
650	692539	1	Screw ●
737	690679	1	Screw ●
788	691559	1	Bracket-Pump, Fuel ●
816	690706	1	Washer ●
918	393815	1	Line-Vacuum ●
988	692063	1	Gasket-Adapter, Oil Filter ● ■
1017	690900	1	Screen-Pump, Oil ●
1024	693185	1	Pump-Oil ●
1027	492932	1	Filter-Oil ●
1028	808235	1	Adapter-Filter, Oil ●

● Obtain parts from www.briggsandstratton.com

■ Included in Engine Gasket Set (Ref. No. 358)

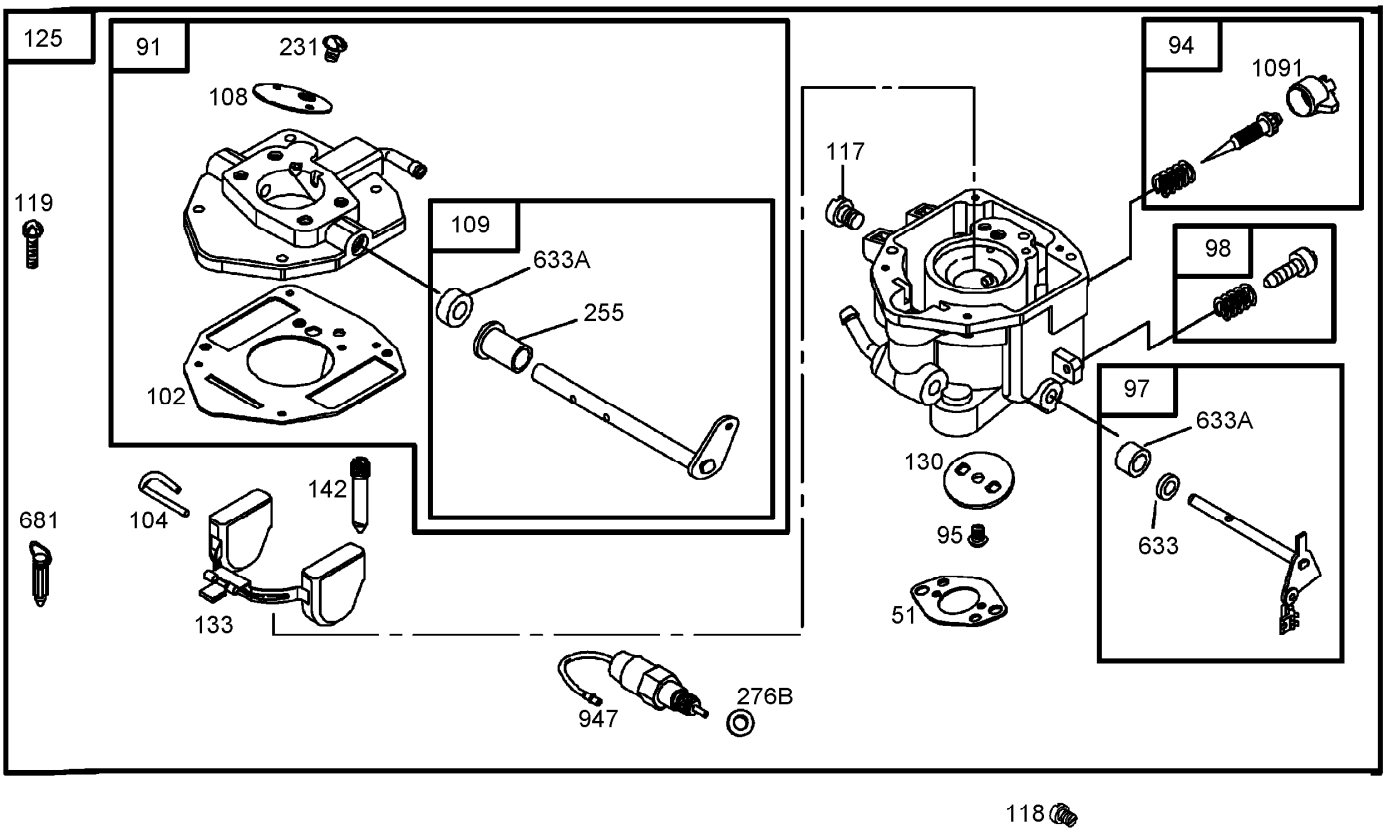

Carburetor Assembly
Briggs and Stratton 305447-0178-E1

Ref.	Part Number	Qty.	Description
51	691694	1	Gasket-Intake ●■
91	809208	1	Upper Carburetor Body ASM ●
94	808257	1	Idle Mixture Kit ●▲
95	690718	1	Screw ●
97	807495	1	Shaft throttle ●
98	808981	1	Idle Speed Kit ●
102	692077	1	Gasket-Body, Carburetor ●▲
104	690723	1	Pin-Hinge, Float ●▲
108	690719	1	Valve-Choke ●
109	809096	1	Shaft-Choke ●
117	690862	1	Jet main ●▲
118	842311	1	Jet-Main ●
119	690720	1	Screw ●

Ref.	Part Number	Qty.	Description
125	842729	1	Carburetor ●
130	690726	1	Valve-Throttle ●
133	806961	1	Float-Carburetor ●
142	690725	1	Nozzle-Carburetor ●
231	690718	1	Screw ●
255	690721	1	Bushing-Shaft, Choke ●▲
276B	806137	1	Washer-Sealing ●
633	806131	1	Seal-Shaft, Choke Throttle ●▲
633A	690722	1	Seal-Shaft, Choke Throttle ●▲
681	808798	1	Valve-Needle, Float ●▲
947	692094	1	Solenoid-Fuel ●
1091	691516	1	Cap-Limiter ●▲

● Obtain parts from www.briggsandstratton.com
▲ Included in Carburetor Overhaul Kit (Ref. No. 121)
■ Included in Engine Gasket Set (Ref. No. 358)

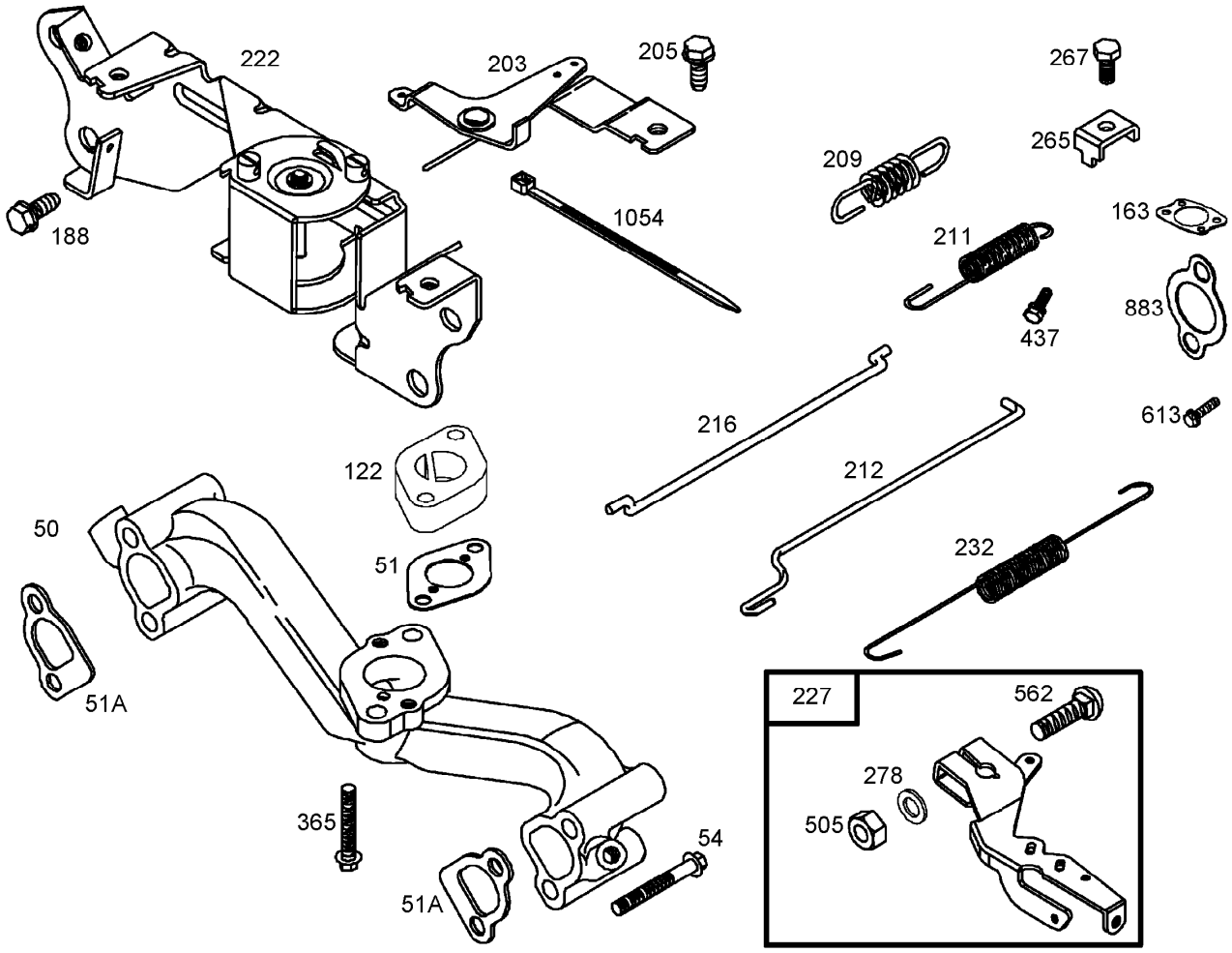

Governor Assembly
Briggs and Stratton 305447-0178-E1

Ref.	Part Number	Qty.	Description
50	690754	1	Manifold-Intake ●
51	691694	1	Gasket-Intake ●■
51A	692035	1	Gasket-Intake ●■▲
54	690676	1	Screw ●
122	690691	1	Spacer-Carburetor ●
163	692081	1	Gasket-Cleaner, Air ●
188	692056	1	Screw ●
203	690923	1	Crank-Bell ●
205	692083	1	Screw ●
209	692071	1	Spring-Governor ●
211	692069	1	Spring-Idle, Governed ●
212	690712	1	Link-Throttle ●
216	690705	1	Link-Choke ●

Ref.	Part Number	Qty.	Description
222	808454	1	Bracket-Control ●
227	690236	1	Lever-Control, Governor ●
232	692073	1	Spring-Link, Governor ●
265	691024	1	Clamp-Casing ●
267	692083	1	Screw ●
278	842122	1	Washer ●
365	690711	1	Screw ●
437	691902	1	Screw ●
505	690238	1	Nut ●
562	690239	1	Bolt ●
613	691902	1	Screw ●
883	691613	1	Gasket-Exhaust ●■▲
1054	280275	1	Tie-Cable ●

● Obtain parts from www.briggsandstratton.com
▲ Included in Valve Gasket Set (Ref. No. 1095)
■ Included in Engine Gasket Set (Ref. No. 358)

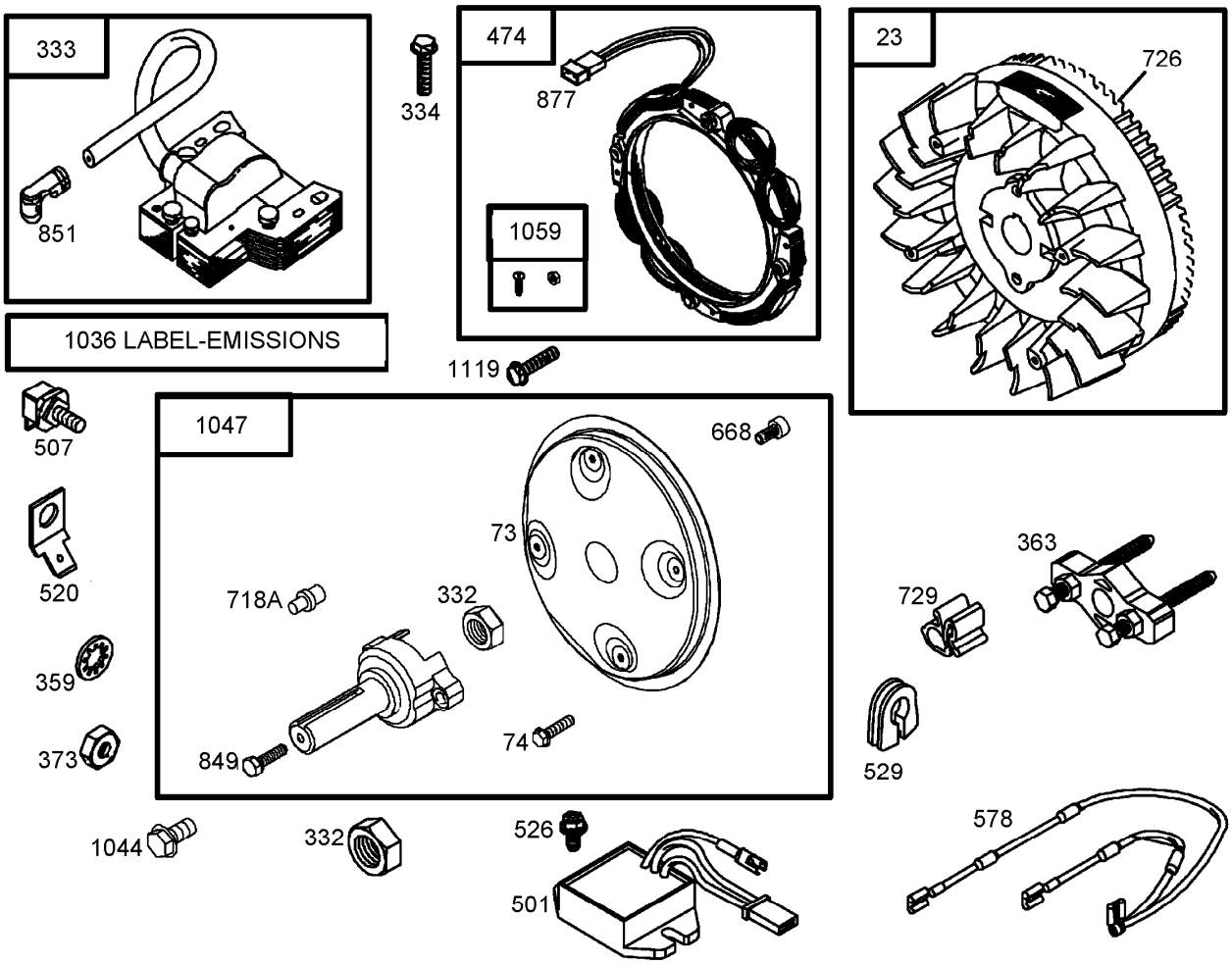

Flywheel Assembly
Briggs and Stratton 305447-0178-E1

Ref.	Part Number	Qty.	Description
23	841825	1	Flywheel ■
73	841582	1	Screen-Rotating ■
74	841441	1	Screw ■
332	690887	1	Nut ■
333	492341	1	Armature-Magneto ■
334	692066	1	Screw ■
359	691077	1	Washer ■
363	19203	1	Puller-Flywheel ■
373	691612	1	Nut ■
474	696458	1	Alternator ■
501	691185	1	Regulator ■
507	691972	1	Insulator ■
520	691084	1	Terminal-Ground ■
526	692067	1	Screw ■
529	690744	1	Grommet ■
578	692319	1	Wire ASM ■

Ref.	Part Number	Qty.	Description
668	691500	1	Spacer ■
718A	841581	1	Pin-Locating ■
726		1	Gear-Ring ■ ●
729	690586	1	Clip-Wire ■
849	691088	1	Screw (Stub Shaft) ■
851	493880	1	Terminal-Spark Plug ■
877	399916	1	Connector-Wire, Alternator ■
1036	842664	1	Label-Emission (After Engine Date Code: 05063000) ■
1044	692056	1	Screw ■
1047	841580	1	Shaft-Stub ■
1059	698516	1	Screw And Washer Kit ■
1119	691552	1	Screw ■

● Not serviced separately

■ Obtain parts from www.briggsandstratton.com

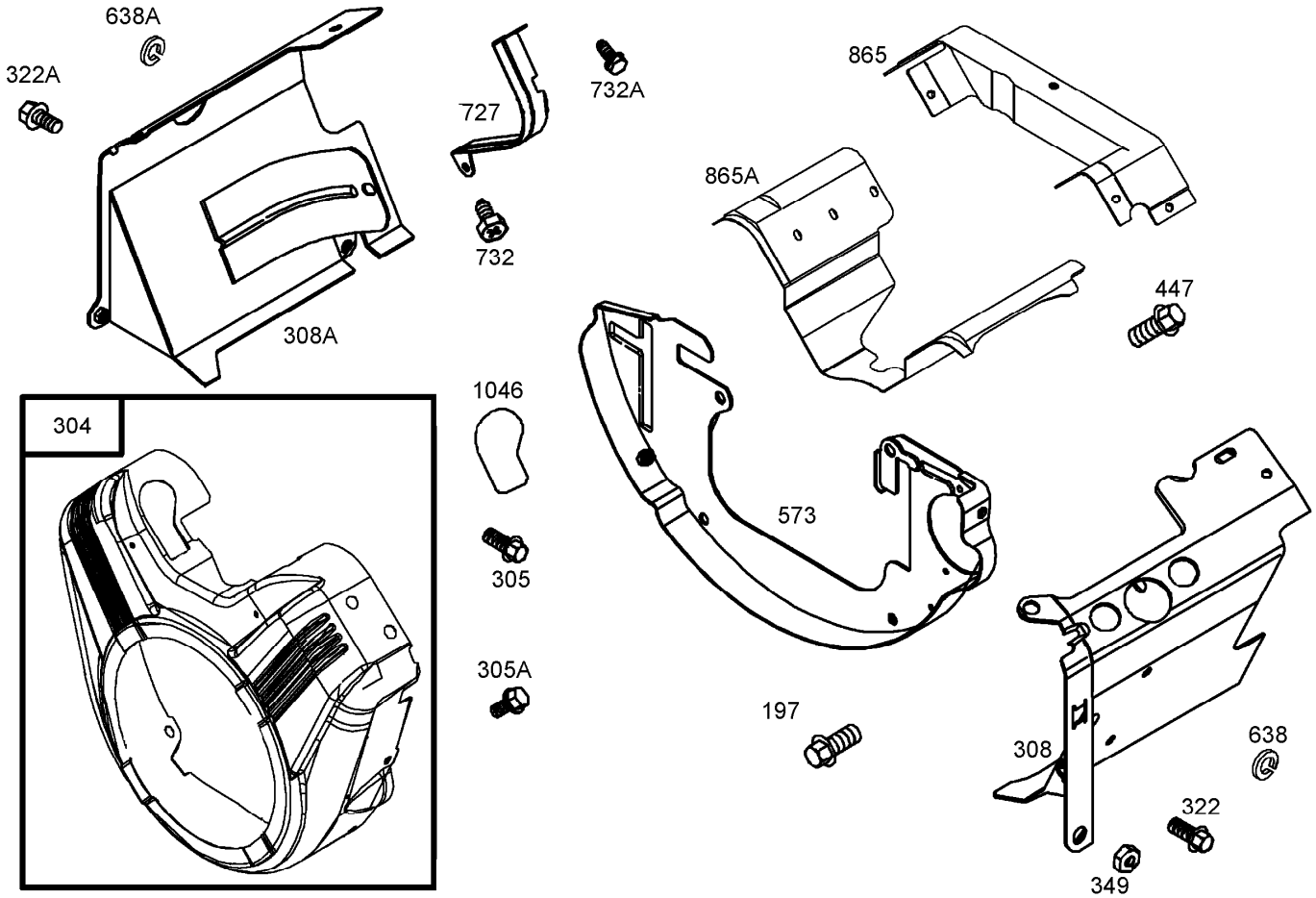

Blower Housing Assembly
Briggs and Stratton 305447-0178-E1

Ref.	*Part Number*	*Qty.*	*Description*
197	807163	1	Screw ●
304	841828	1	Housing-Blower ●
305	841233	1	Screw ●
305A	692056	1	Screw ●
308	841317	1	Cover-Head, Cylinder (Cylinder 1) ●
308A	841316	1	Cover-Head, Cylinder (Cylinder 2) ●
322	841233	1	Screw ●
322A	692067	1	Screw ●
349	690238	1	Nut ●
447	841233	1	Screw ●
573	841310	1	Plate back ●
638	690706	1	Washer ●
638A	691551	1	Washer ●
727	841313	1	Cover drive, Starter ●
732	690688	1	Screw ●
732A	841233	1	Screw ●
865	841319	1	Cover-Guide, Air ●
865A	807119	1	Cover-Guide, Air ●
1046	692085	1	Plug-Blower Housing ●

● Obtain parts from www.briggsandstratton.com

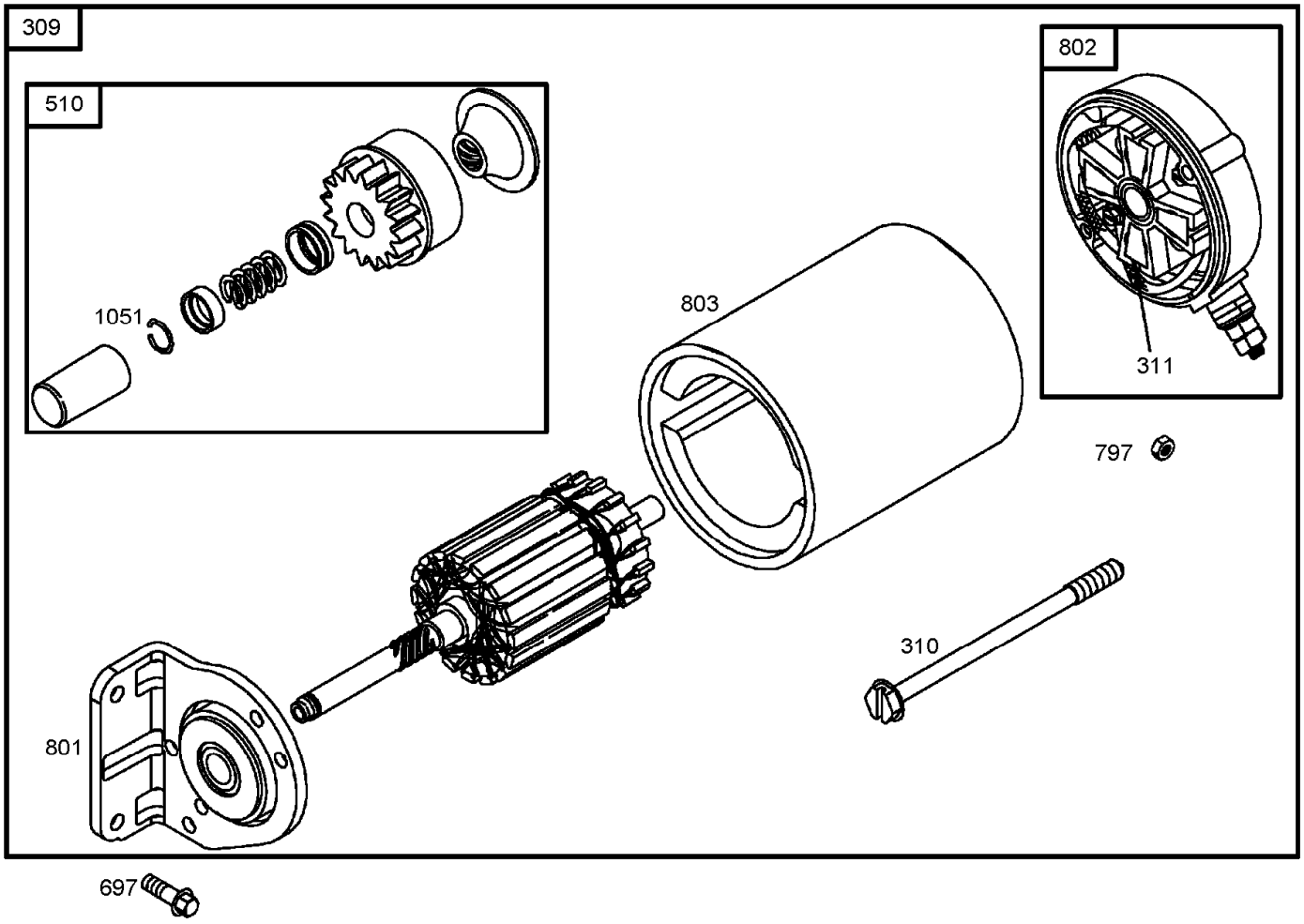

Starter Assembly
Briggs and Stratton 305447-0178-E1

Ref.	*Part Number*	*Qty.*	*Description*
309	691564	1	Motor-Starter ●
310	496880	1	Bolt-Thru ●
311	496887	1	Brush Set ●
510	496881	1	Drive-Starter ●
697	692062	1	Screw ●
797	691029	1	Nut ●
801	808778	1	Cap-Drive ●
802	496813	1	Cap-End ●
803	690854	1	Housing-Starter ●
1051	691124	1	Ring-Lock ●

● Obtain parts from www.briggsandstratton.com

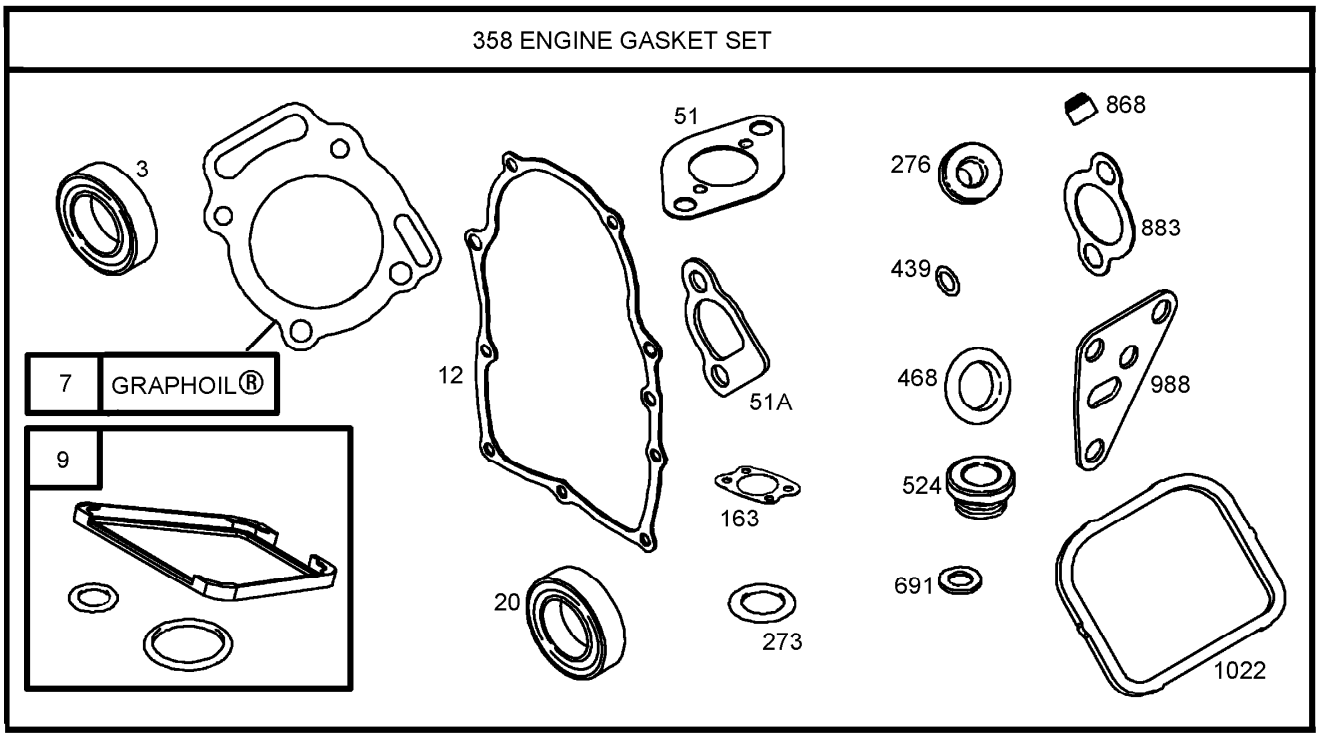

358 Engine Gasket Set
Briggs and Stratton 305447-0178-E1

Ref.	*Part Number*	*Qty.*	*Description*
3	805101	1	Seal-Oil ●
7	806085	1	Gasket-Head, Cylinder ●■
9	809094	1	Gasket-Breather ●
12	842589	1	Gasket-Crankcase ●
20	805049	1	Seal-Oil ●
51	691694	1	Gasket-Intake ●
51A	692035	1	Gasket-Intake ●■
163	692081	1	Gasket-Cleaner, Air ●
273	690681	1	Seal-O Ring ●
276	690724	1	Washer-Sealing ●
358	841188	1	Engine Gasket Set ●
439	692154	1	Seal-O Ring ●
468	690690	1	Seal-O Ring ●
524	693172	1	Seal-Tube, Dipstick ●
691	690680	1	Seal-Shaft, Governor ●
868	691963	1	Seal-Valve ●■
883	691613	1	Gasket-Exhaust ●■
988	692063	1	Gasket-Adapter, Oil Filter ●
1022	806039	1	Gasket-Cover, Rocker ●■

● Obtain parts from www.briggsandstratton.com

■ Included in Valve Gasket Set (Ref. No. 1095)

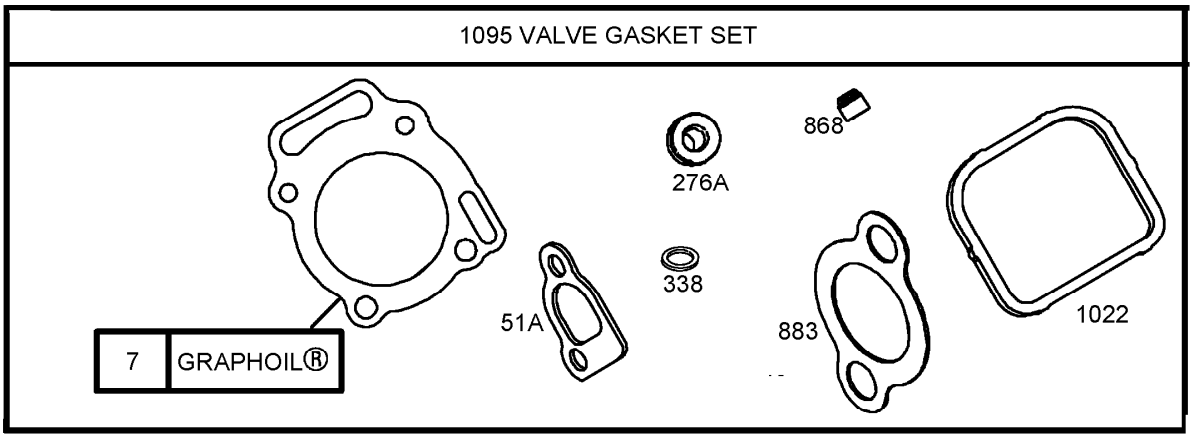

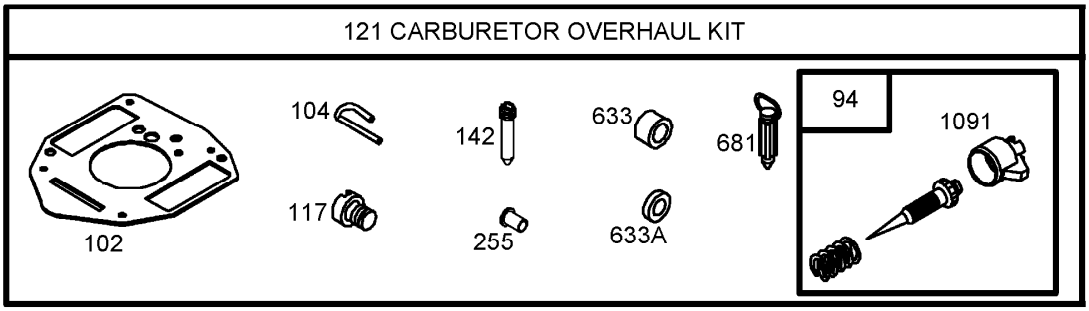

1095 Valve Gasket Set and 121 Carburetor Overhaul Kit Briggs and Stratton 305447-0178-E1

Ref.	*Part Number*	*Qty.*	*Description*
7	806085	1	Gasket-Head, Cylinder ● ■
51A	692035	1	Gasket-Intake ● ■
94	808257	1	Idle Mixture Kit ●
102	692077	1	Gasket-Body, Carburetor ●
104	690723	1	Pin-Hinge, Float ●
117	690862	1	Jet main ●
121	809021	1	Carburetor Overhaul Kit ●
142	690725	1	Nozzle-Carburetor ●
255	690721	1	Bushing-Shaft, Choke ●
276A	807085	1	Washer-Sealing ●
338	691312	1	Seal-O Ring ● ■
633	806131	1	Seal-Shaft, Choke Throttle ●
633A	690722	1	Seal-Shaft, Choke Throttle ●
681	808798	1	Valve-Needle, Float ●
868	691963	1	Seal-Valve ● ■
883	691613	1	Gasket-Exhaust ● ■
1022	806039	1	Gasket-Cover, Rocker ● ■
1091	691516	1	Cap-Limiter ●
1095	842723	1	Valve Gasket Set ●

● Obtain parts from www.briggsandstratton.com

■ Included in Engine Gasket Set (Ref. No. 358)

Attachments and Accessories

For 08703 Sand/Infield Pro 3040 Traction Unit

Product Name	Model/Part
Manual Blade	08714
Midmount Toolbar System	08731
Tooth Rake	08751
Spring Rake	08752
Rear Broom	08753
Finish Grader	08754
Spiker	08755
Drag Mat Carrier System	08756
Debris Blower	08759
QAS Utility Box	08760
QAS Nail Drag	08761
QAS Bunker Pump	08765
Rear Remote Hydraulic Kit	08781
Screen-Spark Arrestor	104-6540
Yellow Hydraulic Cap	107-1576
Red Gas Cap	107-2173
Light Kit	110-1314
Speed Limiter Kit	110-1371
Draw Bar Hitch Assembly	110-1375
Smooth Wheel and Tire ASM	112-0034
Drag Mat Assembly	112-1424
Variable Orifice Kit	112-1433
MVP Filter Kit	30035
Wheel and Tire Assembly	94-6126

Notes:

Notes:

Notes:

TORO®

Count on it.