Form No. 3360-550 Rev B

TORO®

Count on it.

Parts Catalog

Sand Pro®/Infield Pro® 5040 Traction Unit

Model No. 08705—Serial No. 280000801 and Up

Register at www.Toro.com.
Original Instructions (EN)

CE

3360-550 B

Ordering Replacement Parts

To order replacement parts, please supply the part number, the quantity, and the description of each part desired.

Understanding Reference Numbers

Each identified part in an illustration has a reference number. The reference number for a part also appears in the parts list, along with other information about the part.

This catalog uses two special reference number formats, one to indicate parts in a service assembly and another to indicate the quantity of a given part in an illustration.

Service Assembly Reference Numbers

Parts in service assemblies have reference numbers in the form a:b. The a represents the reference number of the entire service assembly and the b represents a sequential number unique to each part within the service assembly.

For example, a wheel assembly might be identified by reference number 6, the tire by 6:1, the valve by 6:2, and the wheel by 6:3. When you order the assembly identified by reference number 6, you receive all parts identified by reference numbers 6:1,6:2, and 6:3. However, you may also order any part individually. Reference numbers of this type appear in illustration and in parts lists.

Reference Numbers Indicating Quantity

In an illustration, if a reference number indicates more than one part, the reference number has the form nX y. The n represents the quantity of the part, the X is the multiplication symbol, and the y represents the reference number.

For example, in an illustration, the reference number 2X 37 means that two of the parts identified by reference number 37 are indicated.

List of Abbreviations

AR: as required

ASM: assembly

BBC: blade brake control

BHTF: button head thread forming

CARR: carriage

CCW: counter clockwise

CW: clockwise

DEG: degrees

DPA: Dual Point Adjustment

ECM: electronic control module

EXT: external

FH: flat head

GA: gauge

HD: heavy-duty

HF: hex flange

HH: hex head

HHF: hex head flange

HHFTF: hex head flange thread forming

HJ: hex jam

HLH: hex lag head

HOC: height-of-cut

HSBH: hex socket button head

HSFH: hex socket flat head

HSH: hex socket head

HWH: hex washer head

HWHTF: hex washer head thread forming

HYD: hydraulic

LH: left hand

LPG: Liquid Propane Gas

NI: nylon insert

NPTF: national pipe thread fine

PFH: phillips flat head

PPH: phillips pan head

PPHTF: phillips pan head thread forming

PRH: phillips round head

PTH: phillips truss head

PTO: power-take-off

RH: right hand

ROPS: roll-over protection system

RRB: rear roller brush

SFH: slotted fillister head

SHH: slotted hex head

SHWH: slotted hex washer head

SPH: slotted pan head

SQH: square head

SRH: slotted round head

STD: standard

TAP: self tapping

TTH: torx truss head

Contents

Frame and Console Assembly 4
Steering Assembly 5
Steering Valve Assembly No. 108-2924 6
Hydraulic Cylinder Assembly No. 114-0620 7
Fuel Tank and Battery Assembly 8
Front Wheel Assembly 9
Hydraulic Motor Assembly No. 108-2948 11
Rear Wheel Assembly 12
Hydraulic Motor Assembly No. 108-2949 13
Hydraulic Motor Assembly No. 108-2947 14
Traction Pedal Assembly 15
Pump Control Lever Assembly 16
Engine Installation Assembly 17
Pump and Coupling Assembly 18
Variable Piston Pump Assembly No. 114-0612 19
Hydraulic Tank, Filter and Cooler Assembly 21
Lift Valve and Rear Tube Assembly 22
Valve Assembly No. 43-1710 23
Seat and Shroud Assembly 24
Wire Harness, Air Cleaner and Hose Assembly 25
Air Cleaner Assembly No. 93-2190 26
Rear Hitch Assembly 27
Hydraulic Cylinder Assembly No. 110-1338 28
Cylinder Assembly Briggs and Stratton 356447-0179-E1 29
Crankcase Assembly Briggs and Stratton 356447-0179-E1 30
Crankshaft Assembly Briggs and Stratton 356447-0179-E1 31
Cylinder Head Assembly Briggs and Stratton 356447-0179-E1 32
Oil Filter, Tube and Pump Assembly Briggs and Stratton 356447-0179-E1 33
Carburetor Assembly Briggs and Stratton 356447-0179-E1 34
Governor Assembly Briggs and Stratton 356447-0179-E1 35
Flywheel Assembly Briggs and Stratton 356447-0179-E1 36
Blower Housing Assembly Briggs and Stratton 356447-0179-E1 37
Starter Assembly Briggs and Stratton 356447-0179-E1 38
358 Engine Gasket Set Briggs and Stratton 356447-0179-E1 39
1095 Valve Gasket Set and 121A Carburetor Overhaul Kit Briggs and Stratton 356447-0179-E1 40
Attachments and Accessories 41

© 2012—The Toro® Company
8111 Lyndale Avenue South
Bloomington, MN 55420

Contact us at www.Toro.com.
Printed in the USA.
All Rights Reserved

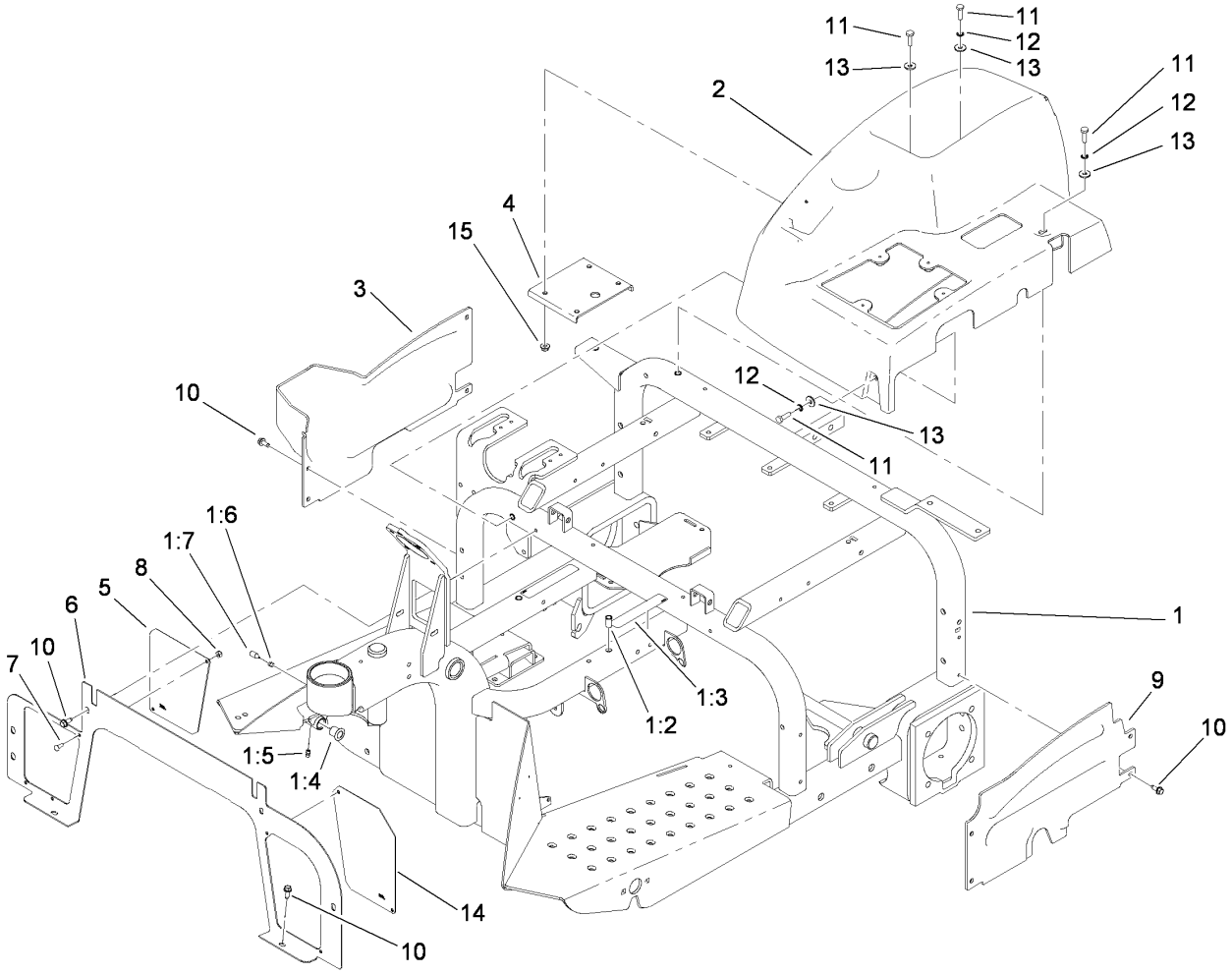

Frame and Console Assembly

Ref.	Part Number	Qty.	Description
1	110-3367	1	Frame ASM
1:2	32148-11	5	Insert-Threaded
1:3	93-7272	2	Decal-Warning
1:4	256-219	2	Bushing
1:5	302-58	1	Fitting-Straight
1:6	107-1997	1	Fitting-Grease
1:7	107-1998	1	Nozzle-Grease
2	108-2936	1	Console
3	108-6855	1	Shroud-Wheel, RH
4	108-7995-03	1	Plate-Support, Console
5	108-6854-01	1	Screen-Shroud
6	112-1443-01	1	Panel-Front
7	3290-321	4	Screw-HWH
8	3296-2	4	Nut-Lock, NI
9	108-6856	1	Shroud-Wheel, LH
10	32144-10	12	Screw-HWH
11	321-5	7	Screw-HH
12	3254-8	3	Washer-Lock
13	3256-78	7	Washer-Flat
14	108-7907-01	1	Screen-Panel, LH
15	32128-33	4	Nut-HF

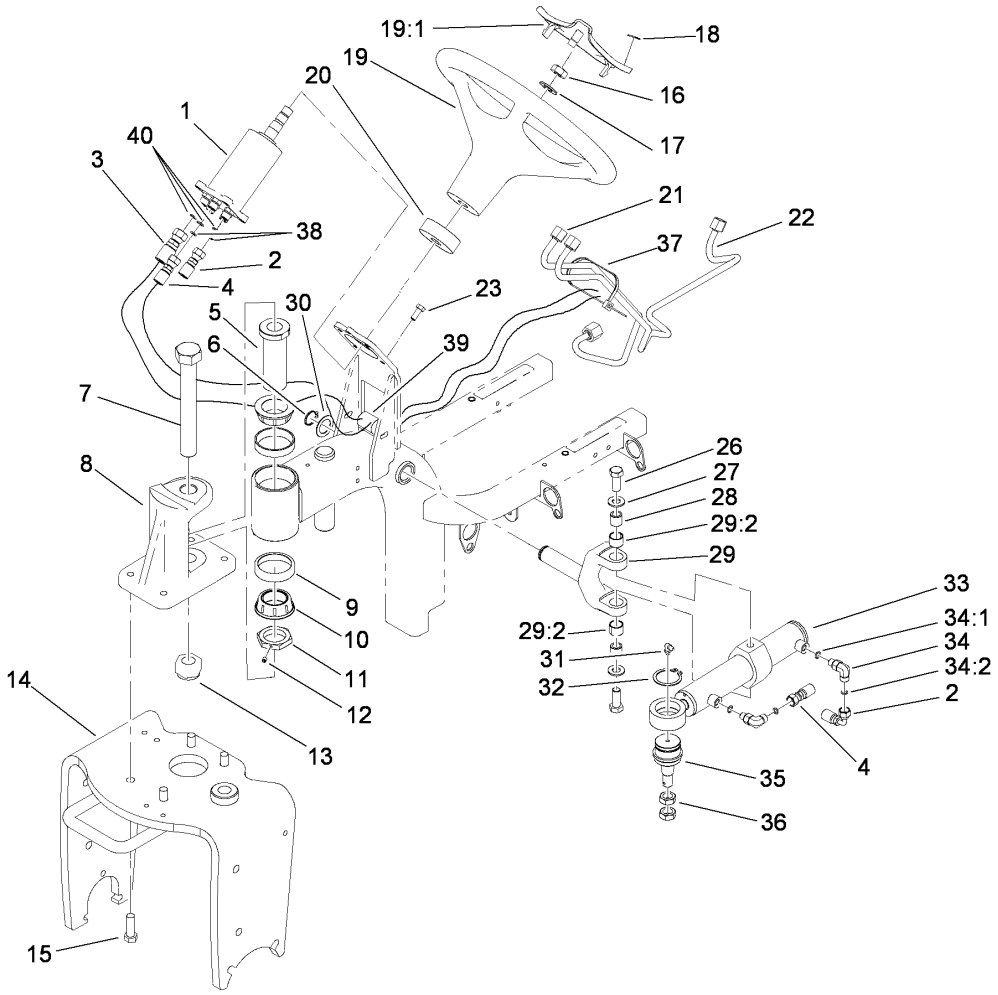

Steering Assembly

Ref.	Part Number	Qty.	Description
1	108-2924	1	Valve-Steering
2	105-4347	1	HYD Hose ASM
3	93-5385	1	Hose ASM
4	108-6508	1	HYD Hose ASM
5	108-8470	1	Sleeve-Steering
6	32151-36	1	Ring-Retaining
7	3216-16	1	Screw-HH
8	108-5431	1	Pivot-Steering
9	107-7590	2	Cup-Bearing
10	107-7589	2	Cone-Bearing (W/ Seal)
11	108-8471	1	Nut-Steering
12	3245-1	1	Screw-Set, HSH
13	104-2024	1	Nut-Hex, NI
14	108-0573-01	1	Castor Fork ASM
15	325-6	4	Screw-HH
16	3296-33	1	Nut-Lock, NI
17	3256-27	1	Washer-Flat
18	98-1459	1	Decal
19	98-1471	1	Wheel-Steering
19:1	98-1468	1	Cover-Wheel, Steering
20	108-7998	1	Collar-Foam

Ref.	Part Number	Qty.	Description
21	108-8414	1	Tube ASM
22	108-8415	1	Tube ASM
23	33114-020	4	Screw-HH
26	94-7976	2	Screw-HH
27	3256-26	2	Washer-Flat
28	108-8483	2	Spacer-Plain
29	108-8481	1	Yoke And Bushing ASM
29:2	108-8482	2	Bushing-Sleeve
30	3256-42	1	Washer-Flat
31	302-40	1	Fitting-Grease
32	32151-104	1	Ring-Retaining, External
33	114-0620	1	Hydraulic Cylinder ASM
34	340-132	2	Fitting-HYD, 90 DEG
34:1	237-78	1	O-Ring
34:2	237-21	1	O-Ring
35	106-6774	1	Joint-Ball
36	3220-6	2	Nut-Jam
37	3290-379	1	Tie-Cable
38	237-21	2	O-Ring
39	38-3400	2	Guard-Rubber
40	237-22	3	O-Ring

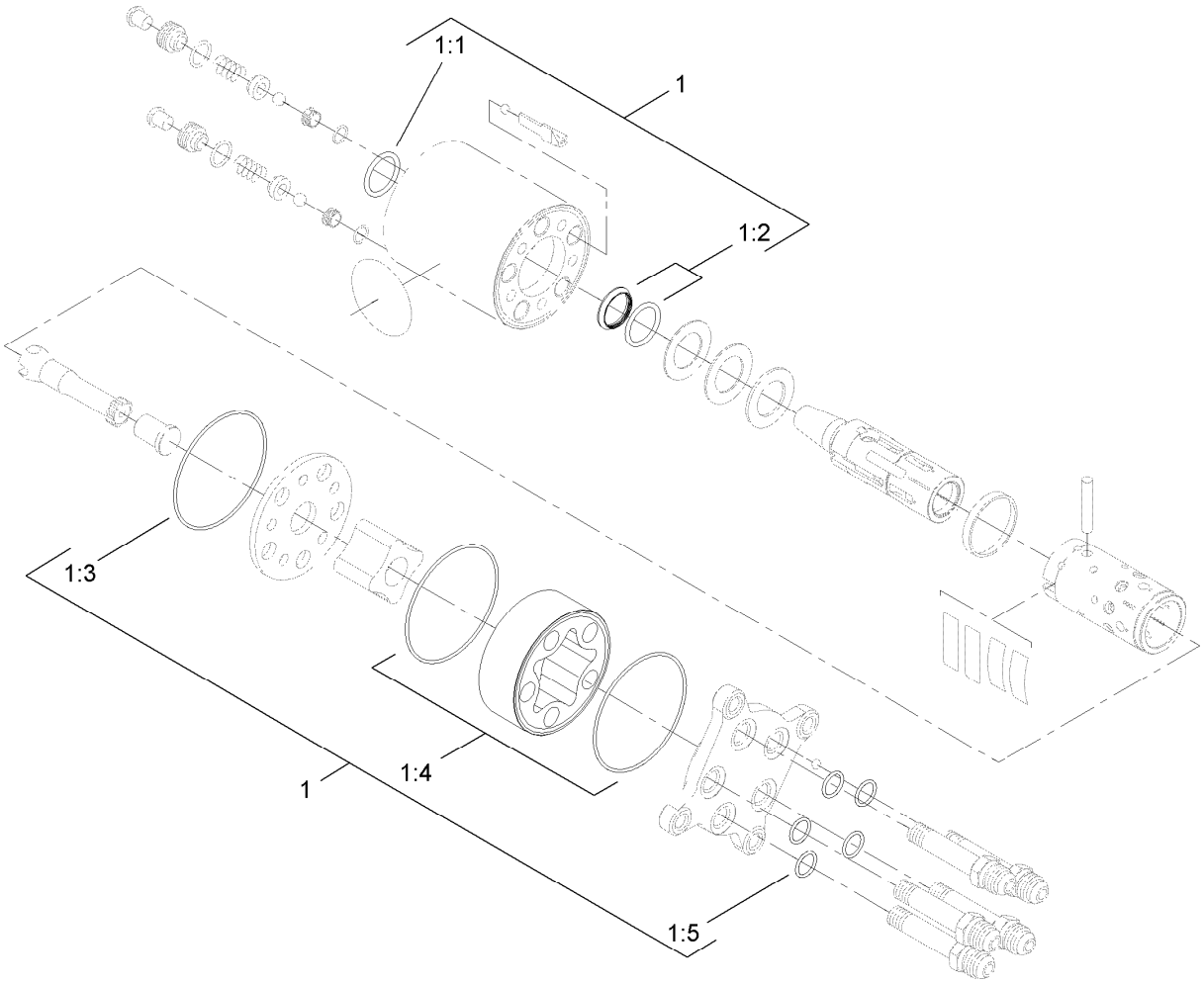

Steering Valve Assembly No. 108-2924

Ref.	*Part Number*	*Qty.*	*Description*
1	106-6716	1	Seal Kit
1:1		1	Ring-Seal, Dust ●
1:2		1	Seal-Shaft ●
1:3		1	O-Ring ●
1:4		2	O-Ring ●
1:5		5	O-Ring ●

● Not serviced separately

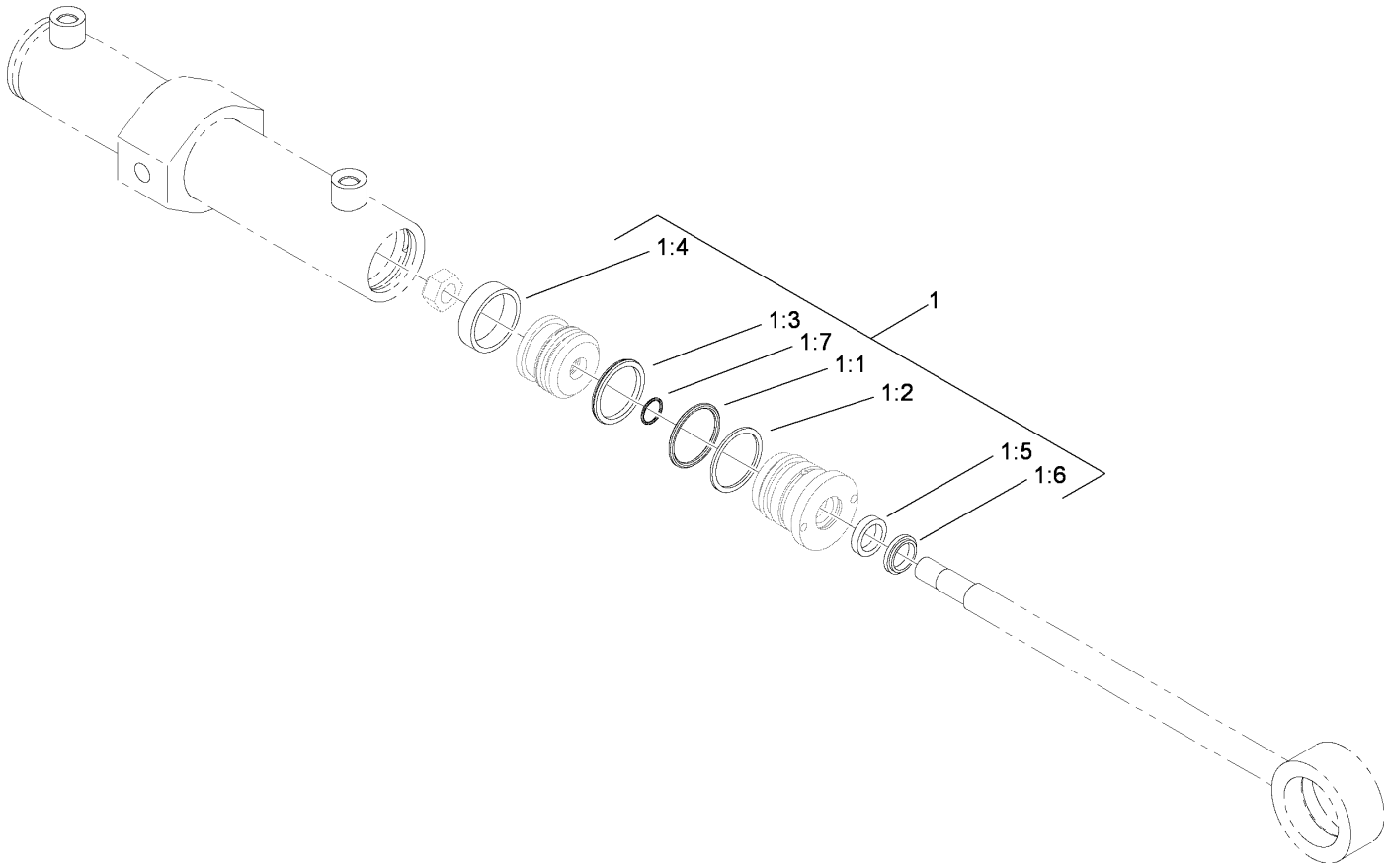

Hydraulic Cylinder Assembly No. 114-0620

Ref.	*Part Number*	*Qty.*	*Description*
1	114-0622	1	Seal Kit
1:1		1	O-Ring ●
1:2		1	Backup ●
1:3		1	Seal-Bp ●
1:4		1	Wear Ring ●
1:5		1	Bs Seal ●
1:6		1	Dust Seal ●
1:7		1	O-Ring ●

● Not serviced separately

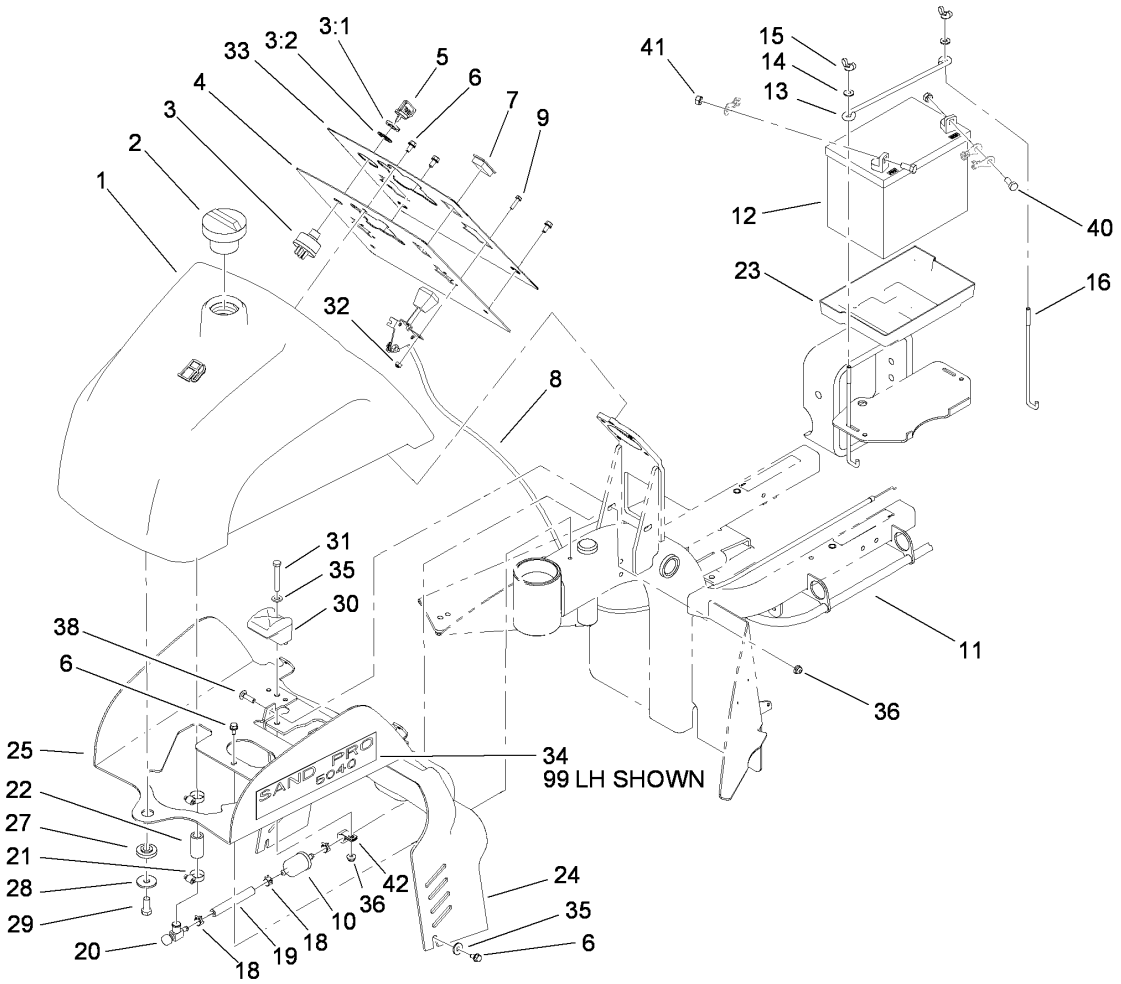

Fuel Tank and Battery Assembly

Ref.	Part Number	Qty.	Description
1	108-2938	1	Tank-Fuel
2	93-7170	1	Cap-Fuel
3	83-0020	1	Switch-Ignition
3:1	218-461	1	Nut-HH
3:2	3254-5	1	Washer-Tooth, Internal
4	108-6896-03	1	Panel-Dash
5	63-8360	2	Key-Ignition (W/Shield)
6	32144-10	6	Screw-HWH
7	99-7420	1	Plug-Hole
8	108-7946	2	Cable ASM
9	3290-321	4	Screw-HWH
10	94-2690	1	Filter-Fuel
11	110-3372	1	Hose-Fuel
12	104-8162	1	Battery
13	100-6434	1	Rod-Hold Down, Battery
14	3256-22	2	Washer-Flat
15	32103-22	2	Nut-Wing
16	100-6435	2	Post-Battery
18	2412-98	4	Clamp-Hose
19	109-0660	1	Hose-Fuel
20	83-1390	1	Valve-Shut-Off, Fuel

Ref.	Part Number	Qty.	Description
21	2412-36	2	Clamp-Hose
22	110-3371	1	Hose-Fuel
23	106948	1	Tray-Battery
24	108-6898	1	Shroud-Dash
25	108-6895-01	1	Bracket-Mount, Tank
27	240-11	1	Bushing-Flange
28	63-8410	1	Washer
29	323-5	1	Screw-HH
30	107-4543	2	Clamp
31	321-18	2	Screw-HH
32	3296-2	4	Nut-Lock, NI
33	108-8487	1	Decal-Dash
34	108-8419	2	Decal
35	3256-78	4	Washer-Flat
36	104-7201	4	Nut-HF
38	3229-1	2	Bolt-CARR
40	322-3	2	Screw-HH
41	3217-6	2	Nut-Hex
42	2412-73	1	Clamp-R
99	115-2080	1	Decal-LH
99	115-2082	1	Decal-RH

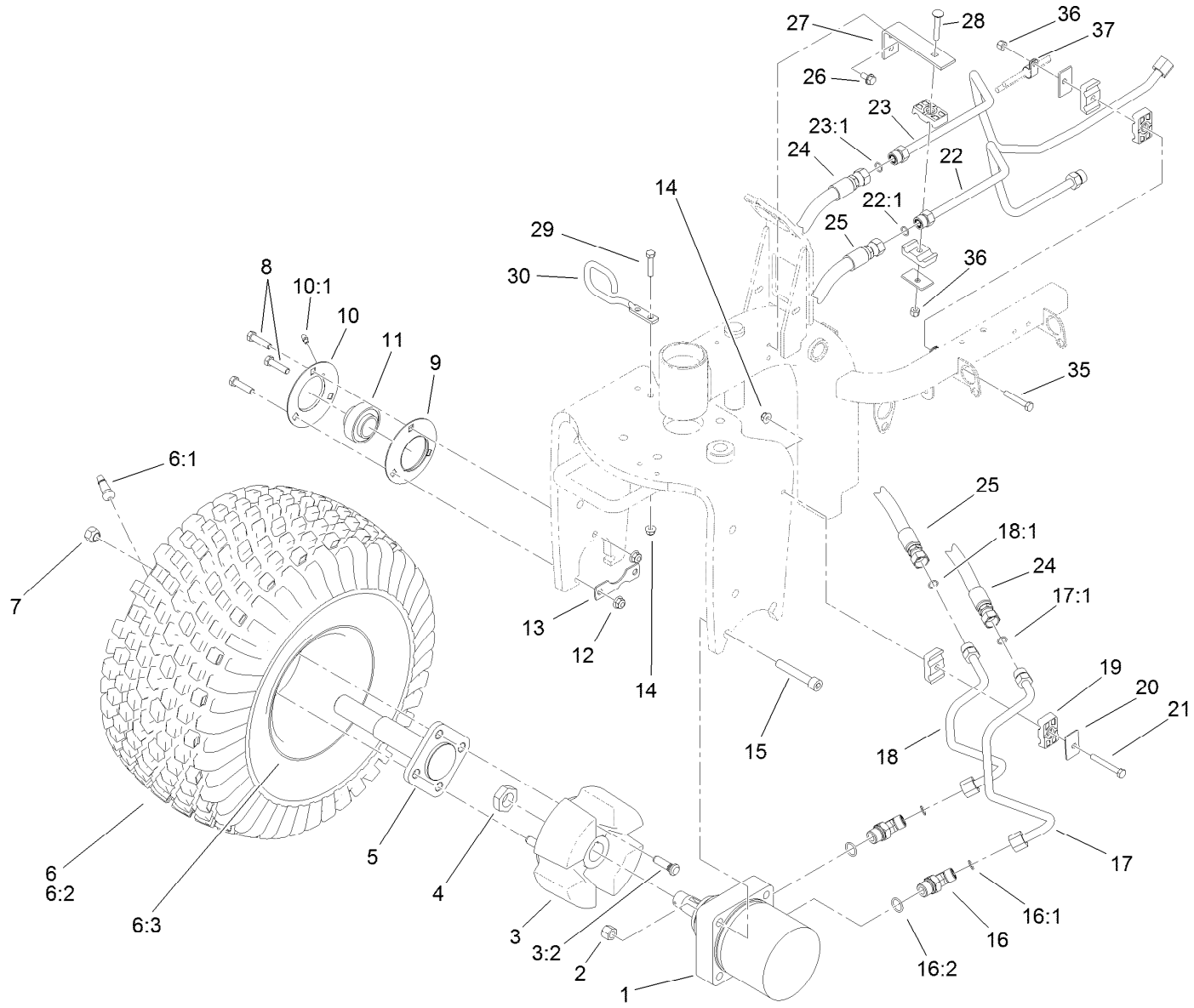

Front Wheel Assembly

Ref.	Part Number	Qty.	Description
1	108-2948	1	HYD Motor ASM (CW)
2	3296-23	2	Nut-Lock, NI
3	110-6310	1	Front Wheel Hub ASM
3:2	10-6830	4	Stud-Type, Drive
4	26-3790	1	Nut-Lock
5	110-6314	1	Spindle
6	95-0621	1	Wheel And Tire ASM
6:1	232-35	1	Valve Stem And Cap ASM
6:2	85-8290	1	Tire-2Ply, Knobby
6:3	94-6116	1	Wheel-Rear
7	242-50	4	Nut-Lug
8	323-8	3	Screw-HH
9	85-8950	1	Flangette-Standard
10	85-8940	1	Flangette-Relube
10:1	302-5	1	Fitting-Grease
11	251-352	1	Bearing
12	104-8301	3	Nut-Flange, NI
13	88-8350	1	Tab-Bearing
14	104-8300	3	Nut-Flange, NI
15	3274-74	2	Screw-HSH
16	340-89	2	Fitting-HYD, 45 DEG

Ref.	Part Number	Qty.	Description
16:1	237-30	1	O-Ring
16:2	237-80	1	O-Ring
17	108-8432	1	Tube ASM
17:1	237-30	1	O-Ring
18	108-8431	1	Tube ASM
18:1	237-30	1	O-Ring
19	56-7976	6	Clamp-Tube
20	69-9760	3	Coverplate
21	322-12	1	Screw-HH
22	108-8411	1	Tube ASM
22:1	237-30	2	O-Ring
23	108-8409	1	Tube ASM
23:1	237-30	1	O-Ring
24	108-8433	1	HYD Hose ASM
25	110-6303	1	HYD Hose ASM
26	32144-14	2	Screw-HWHTF
27	108-8455-01	1	Bracket-Clamp
28	3230-6	1	Screw-CARR
29	322-7	2	Screw-HH
30	108-8435	1	Guide-Hose
35	322-10	1	Screw-HH

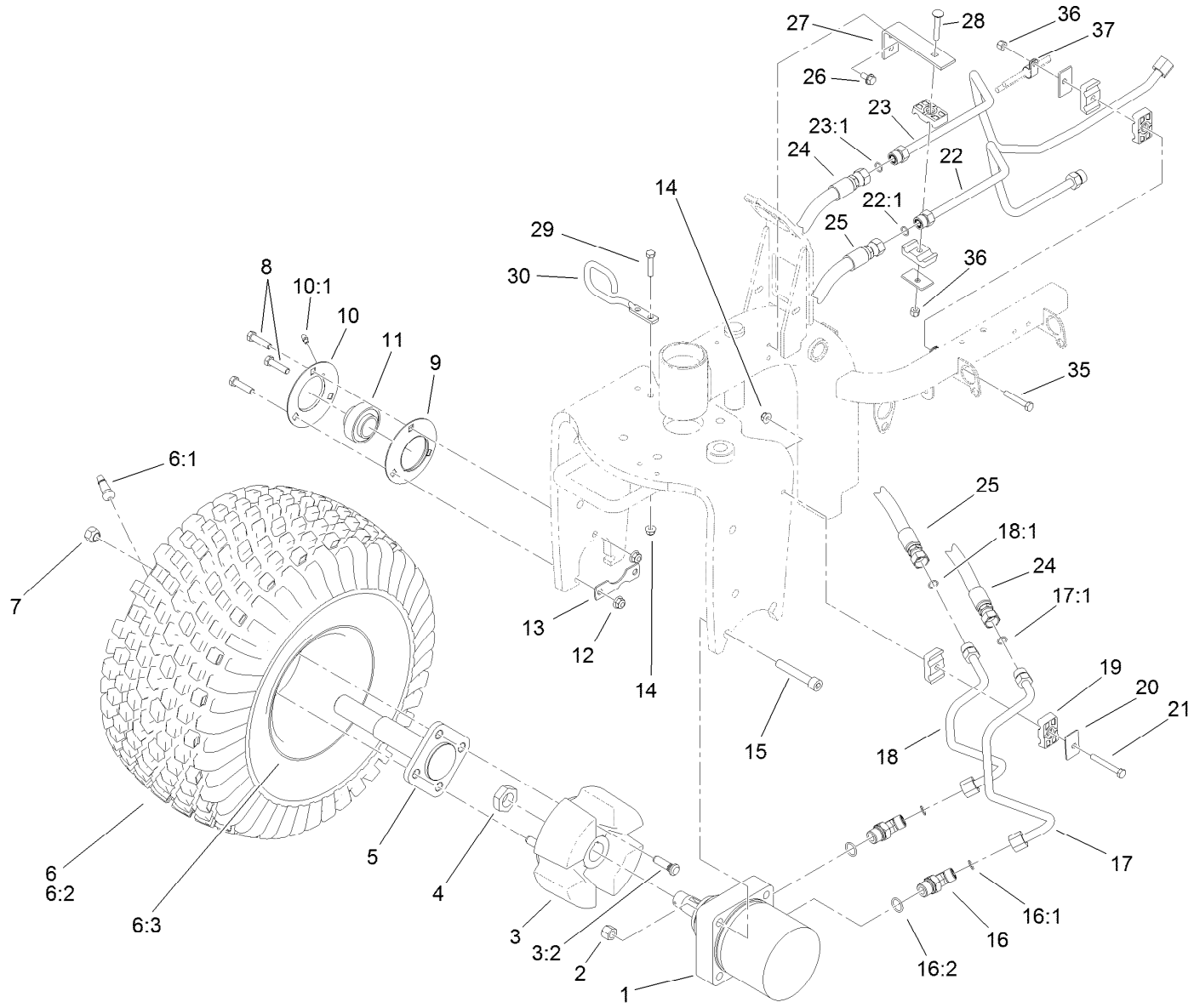

Front Wheel Assembly (continued)

Ref.	Part Number	Qty.	Description
36	3296-29	2	Nut-Lock, NI
37	2412-41	1	Clamp

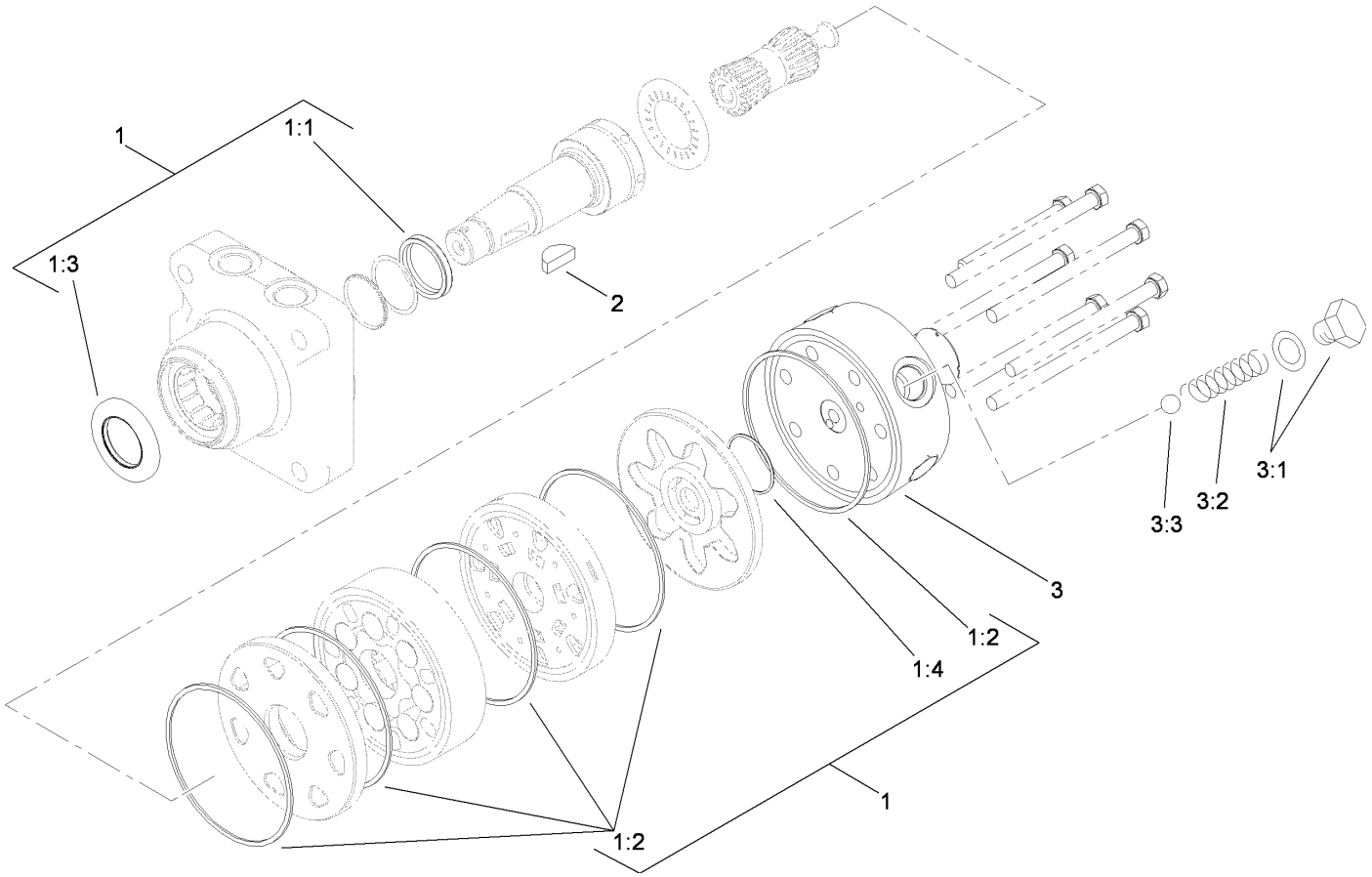

Hydraulic Motor Assembly No. 108-2948

Ref.	*Part Number*	*Qty.*	*Description*
1	110-6459	1	Seal Kit
1:1		1	Seal-Shaft ●
1:2		5	Seal-Body ●
1:3		1	Seal-Dirt / Water ●
1:4		1	Seal-Commutator ●
2	3257-42	1	Key-Woodruff
3	99-3538	1	End Cover ASM
3:1		1	Spring Cap And O-Ring ASM ●
3:2	99-3541	1	Spring
3:3	99-3540	1	Ball

● Not serviced separately

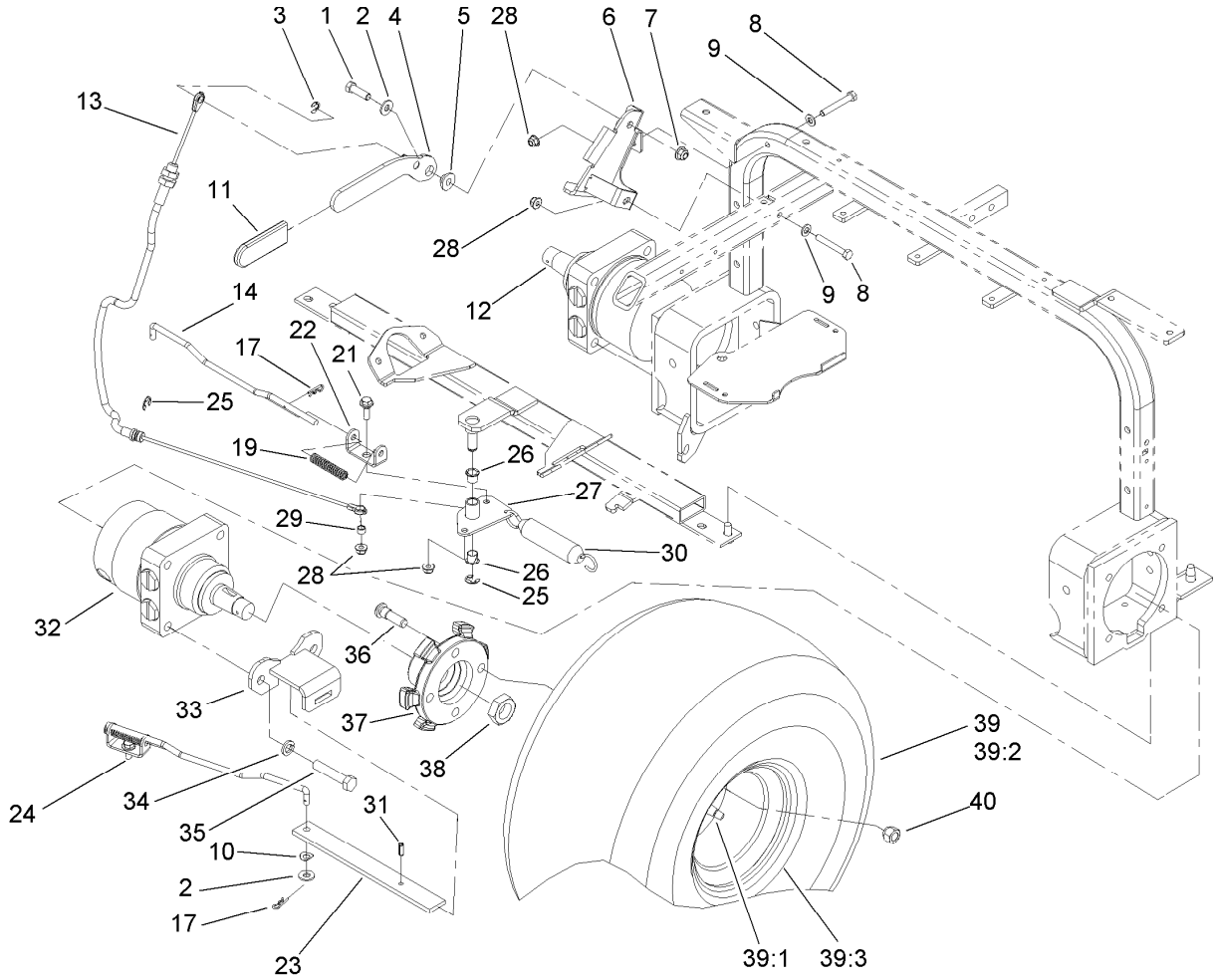

Rear Wheel Assembly

Ref.	Part Number	Qty.	Description
1	323-7	1	Screw-HH
2	3256-3	3	Washer-Flat
3	32151-47	1	Ring-Retaining
4	108-7991-03	1	Brake Lever ASM
5	108-7994	1	Bushing-Pivot, Lever
6	108-7988-03	1	Brake Lever Bracket ASM
7	104-8301	1	Nut-Flange, NI
8	322-11	2	Screw-HH
9	3256-23	2	Washer-Flat
10	3290-301	2	Washer-Spring
11	21-1880	1	Grip-Handle
12	108-2949	1	HYD Motor ASM (CW)
13	108-7913	1	Cable-Brake, Park
14	108-7987	2	Link-Latch, Parking
17	3290-307	4	Pin-Hair
19	107-3376	2	Spring-Compression
21	19-1471	1	Screw-Shoulder
22	114-0631	2	Clevis-Latch, Parking
23	108-7986-03	2	Bar-Brake
24	19-1470	1	Screw-Shoulder

Ref.	Part Number	Qty.	Description
25	32120-47	2	Ring-Retaining, External
26	256-257	2	Bushing-Nyliner
27	108-7979-03	1	Bellcrank ASM
28	104-8300	4	Nut-Flange, NI
29	108-7983	1	Bushing-Cable
30	66-4270	1	Spring-Extension
31	32121-11	2	Pin-Roll
32	108-2947	1	HYD Motor ASM (CCW)
33	108-7973-03	2	Brake Bracket ASM
34	3253-7	8	Washer-Lock
35	325-10	8	Screw-HH
36	85-6540	8	Stud-Drive
37	108-7977-03	2	Hub-Wheel
38	26-3790	2	Nut-Lock
39	95-0621	2	Wheel And Tire ASM
39:1	232-35	1	Valve Stem And Cap ASM
39:2	85-8290	1	Tire-2Ply, Knobby
39:3	94-6116	1	Wheel-Rear
40	242-50	8	Nut-Lug

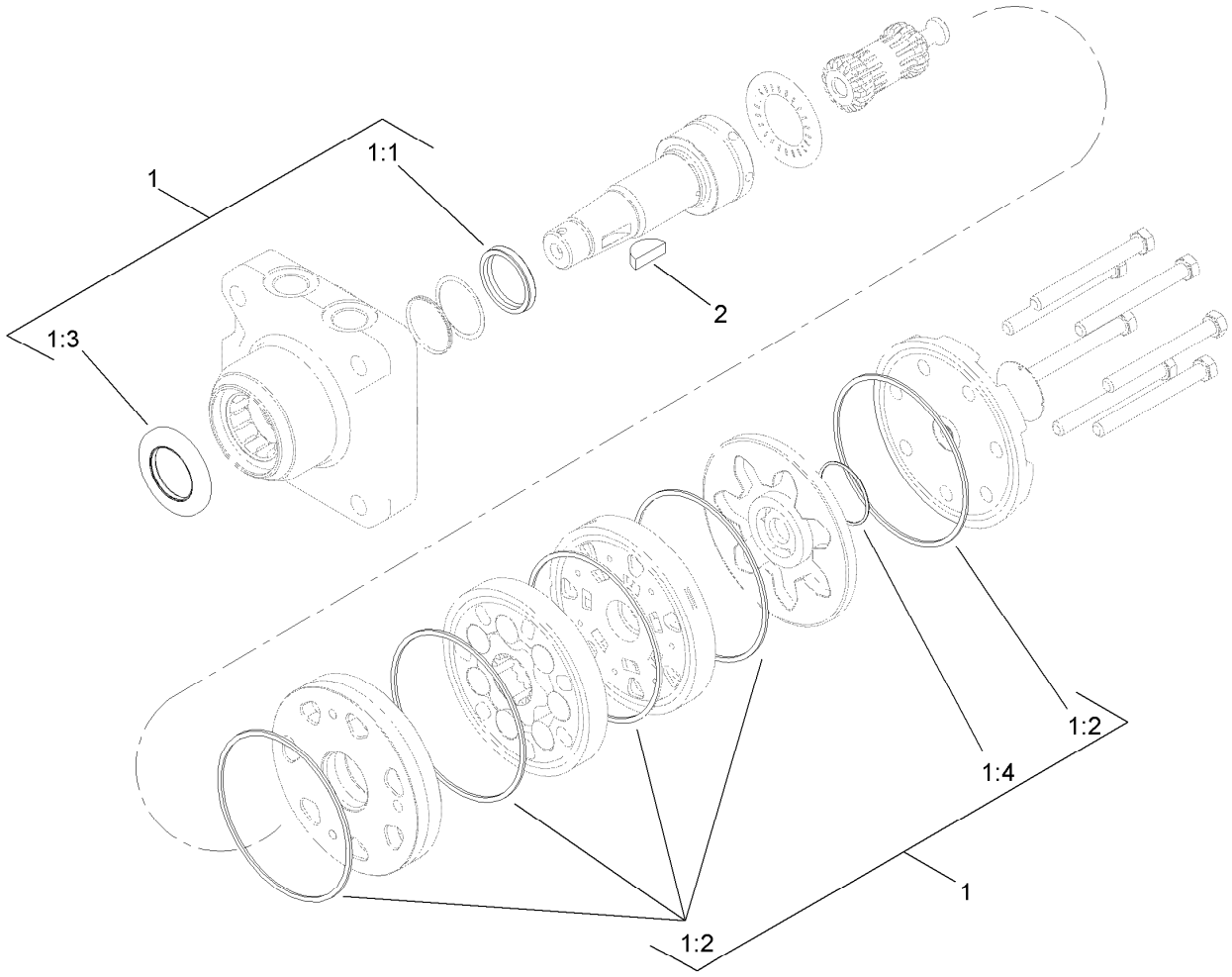

Hydraulic Motor Assembly No. 108-2949

Ref.	*Part Number*	*Qty.*	*Description*
1	110-6459	1	Seal Kit
1:1		1	Seal-Shaft ●
1:2		5	Seal-Body ●
1:3		1	Seal-Dirt / Water ●
1:4		1	Seal-Commutator ●
2	3257-42	1	Key-Woodruff

● Not serviced separately

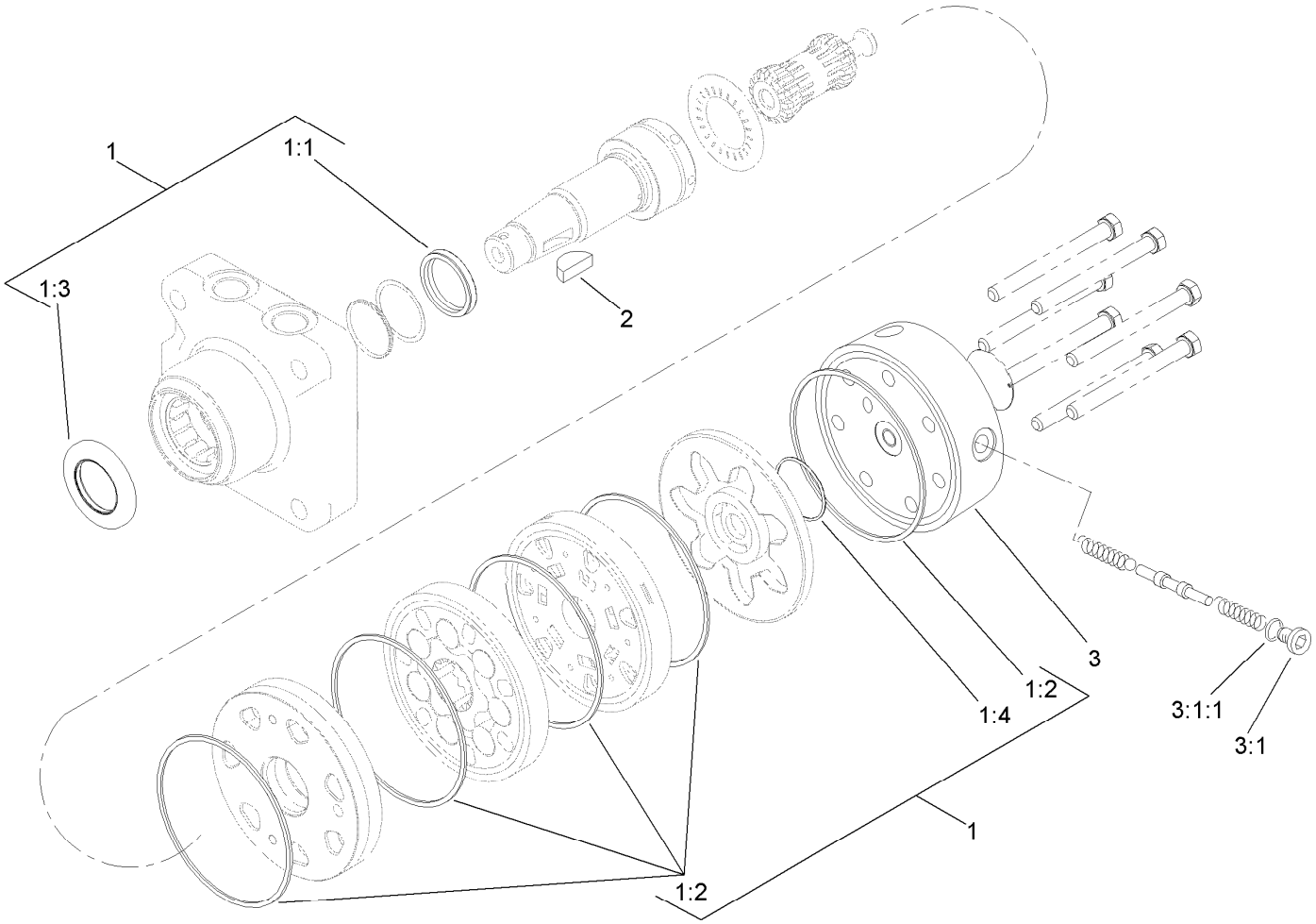

Hydraulic Motor Assembly No. 108-2947

Ref.	*Part Number*	*Qty.*	*Description*
1	110-6459	1	Seal Kit
1:1		1	Seal-Shaft ●
1:2		5	Seal-Body ●
1:3		1	Seal-Dirt / Water ●
1:4		1	Seal-Commutator ●
2	3257-42	1	Key-Woodruff
3	110-3381	1	End Cover ASM
3:1	353-990	1	Plug
3:1:1	237-78	1	O-Ring

● Not serviced separately

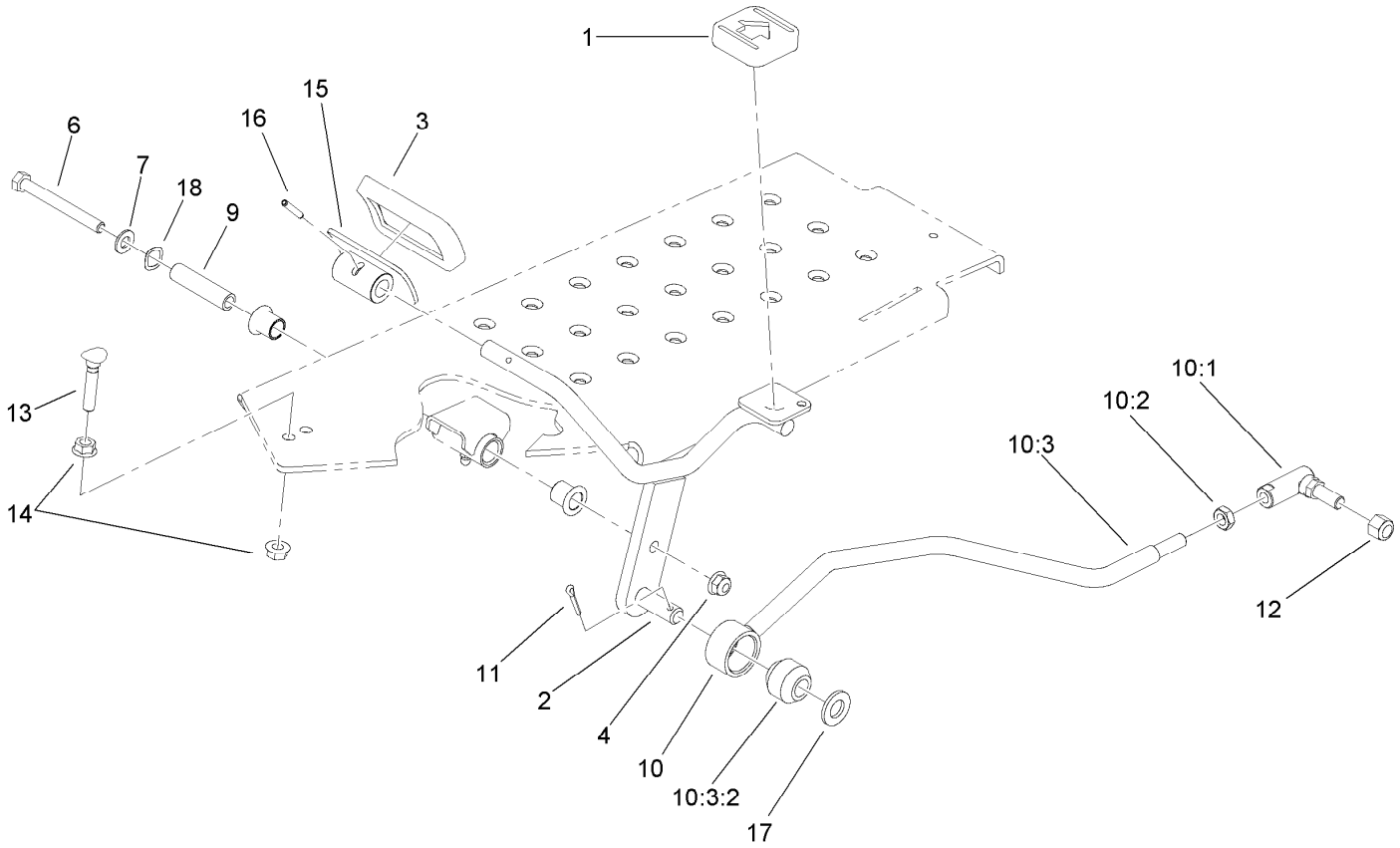

Traction Pedal Assembly

Ref.	Part Number	Qty.	Description
1	74-9110	1	Pad-Pedal, Reverse
2	108-5498-01	1	Pedal ASM
3	74-9100	1	Pad-Pedal, Forward
4	104-8300	1	Nut-Flange, NI
6	322-14	1	Screw-HH
7	3256-23	1	Washer-Flat
9	85-8960	1	Spacer
10		1	Traction Rod ASM ●
10:1	68-3840	1	Joint-Ball, RH Threaded
10:2	3220-3	1	Nut-HJ
10:3	110-8160	1	Rod ASM
10:3:2	23-2270	1	Bushing-Rubber
11	3272-10	1	Pin-Cotter
12	3296-6	1	Nut-Lock
13	17-9420	1	Screw-Handle
14	32128-20	2	Nut-HF
15	49-6440-03	1	Pedal-Forward
16	32121-45	1	Pin-Spring
17	106-9888	1	Washer-Flat
18	108473	1	Washer-Wave

● Not serviced separately

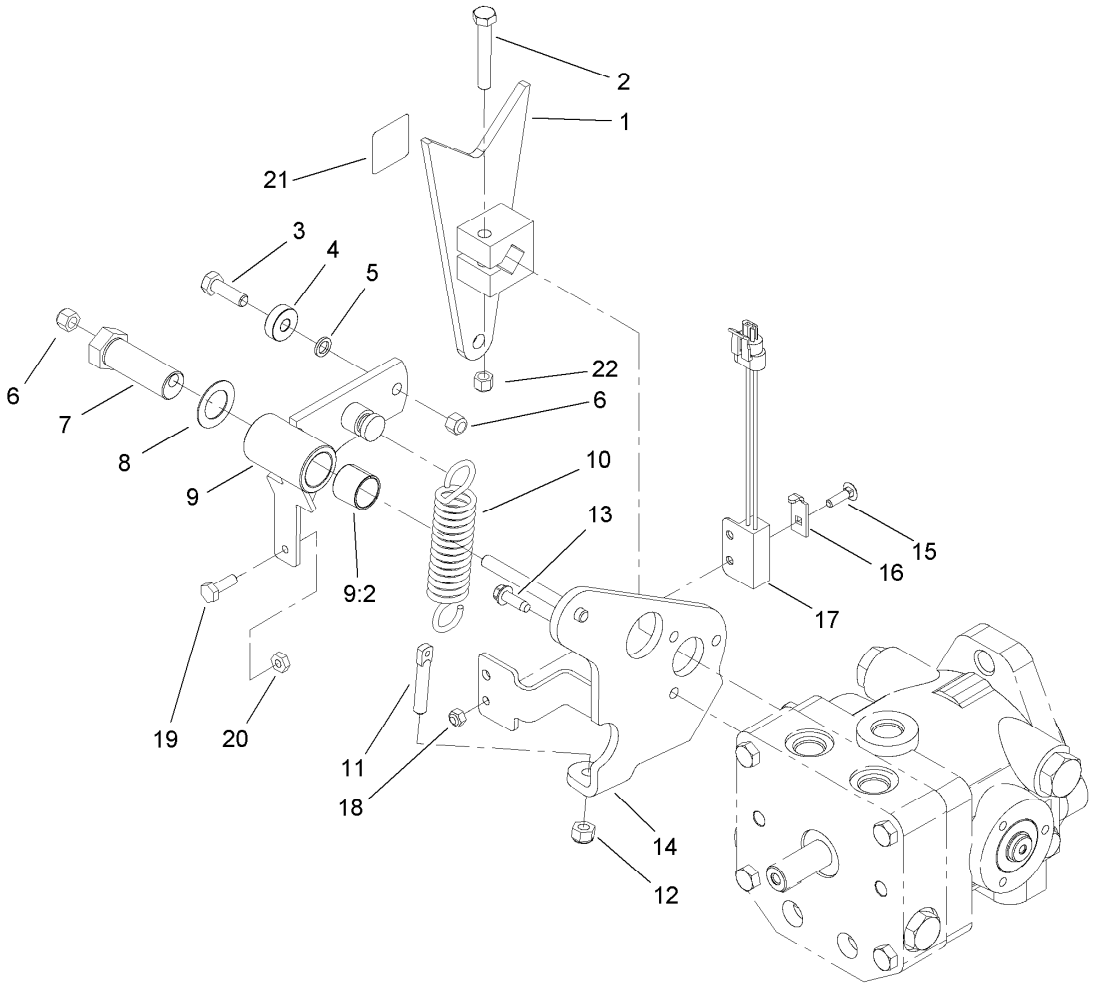

Pump Control Lever Assembly

Ref.	Part Number	Qty.	Description
1	112-6458-03	1	Pump Lever ASM
2	323-11	1	Screw-HH
3	322-5	1	Screw-HH
4	251-307	1	Bearing-Ball
5	75-5470	1	Spacer-Bearing
6	3296-29	2	Nut-Lock, NI
7	76-8640	1	Stud-Traction
8	3-6498	1	Washer-Thrust
9	108-5493	1	Arm ASM
9:2	94-9609	2	Bushing-Straight
10	85-9030	1	Spring-Extension
11	18-6380	1	Pin-Adjustment, Steering
12	3296-4	1	Nut-Lock
13	49-2040	3	Screw-HWHTF
14	108-5490-03	1	Pump Plate ASM
15	3229-20	1	Screw-CARR
16	100-4872	1	Plate-Switch, Neutral
17	105-0023	1	Switch-Proximity
18	3296-2	1	Nut-Lock, NI
19	321-4	1	Screw-HH
20	3218-1	1	Nut-Jam
21	93-9051	1	Decal-Bolt, Eccentric
22	3296-39	1	Nut-Lock, NI

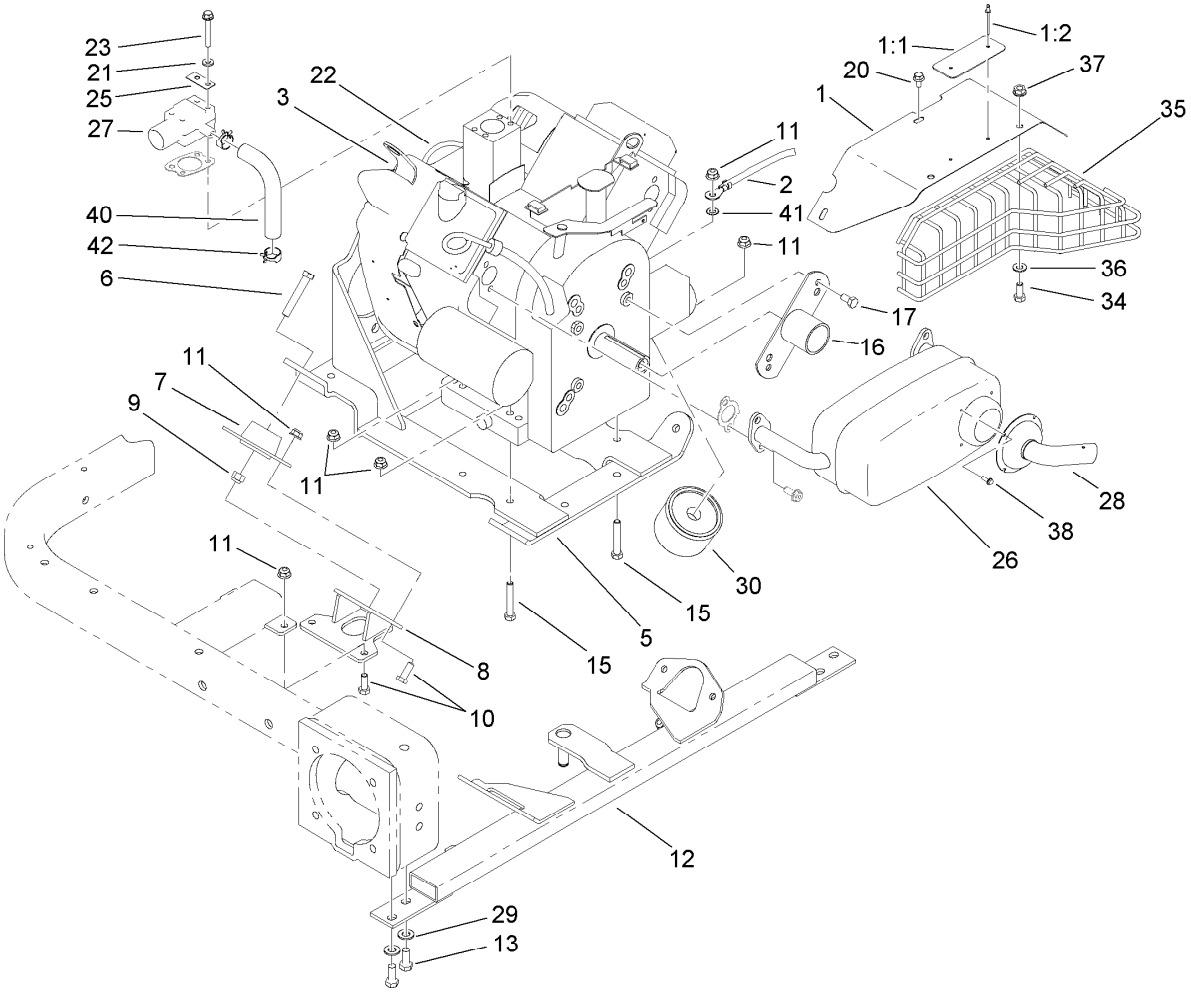

Engine Installation Assembly

Ref.	Part Number	Qty.	Description
1	105-8523	1	Muffler Shield ASM
1:1	95-0645	1	Plate-Surface, Hot
1:2	3269-32	2	Rivet-Pop
2	54-3093	1	Cable-Battery, Negative
3	108-2943	1	Engine-Briggs & Stratton, 356447-0179
5	108-2809-03	1	Engine Support ASM
6	323-11	4	Screw-HH
7	83-1030	4	Mount-Engine
8	108-8474-01	2	Front Mount ASM
9	104-8301	4	Nut-Flange, NI
10	322-4	12	Screw-HH
11	104-8300	16	Nut-Flange, NI
12	108-2819-01	1	Engine Mount ASM
13	323-5	4	Screw-HH
15	322-10	4	Screw-HH
16	95-0632-03	1	Cover ASM
17	3210-2	2	Screw-HH

Ref.	Part Number	Qty.	Description
20	33103-012	3	Screw-HHF
21	3256-16	4	Washer-Flat
22	110-8181	1	Hose-Fuel
23	33103-045	4	Screw-HHF
25	108-8427	2	Gasket-Carburetor
26	114-0628	1	Muffler-Inlet, Dual
27	108-2829	1	Adaptor-Carburetor
28	110-1306	1	Pipe-Tail
29	3256-24	4	Washer-Flat
30	107-7817	1	Filter-Oil, Engine
34	322-3	3	Screw-HH
35	110-6348-03	1	Shield-Exhaust
36	3256-23	3	Washer-Flat
37	32128-25	3	Nut-HF
38	32144-87	4	Screw-HWHTF
40	112-6461	1	Hose-Adapter, Carboretor
41	3255-8	1	Washer-Lock
42	2412-143	2	Clamp-Hose

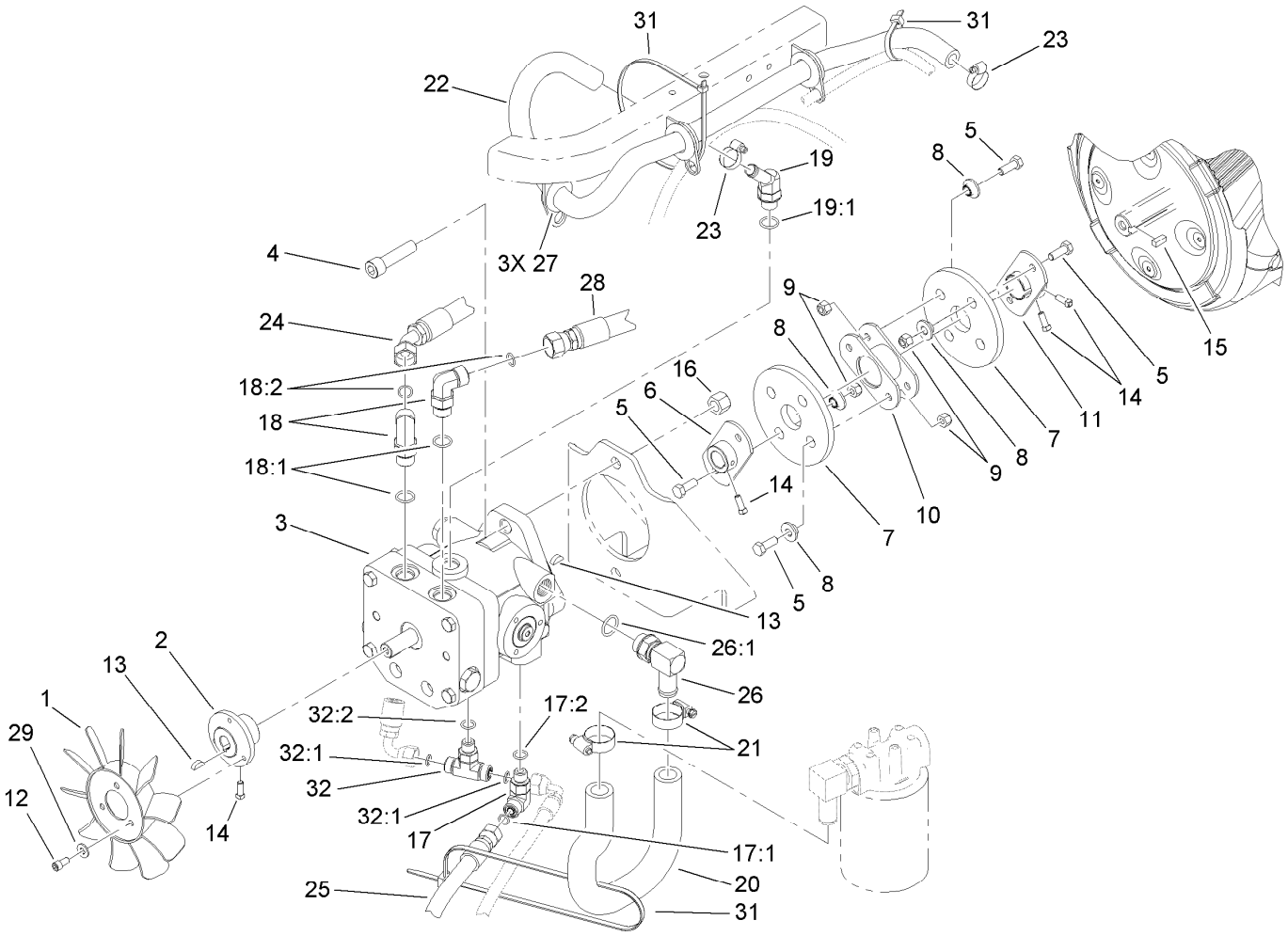

Pump and Coupling Assembly

Ref.	Part Number	Qty.	Description
1	1-633869	1	Fan-Pump, Cooling
2	108-5484	1	Hub-Fan
3	114-0612	1	Variable Piston Pump ASM
4	3274-5	2	Screw-HSH
5	322-4	8	Screw-HH
6	85-8700	1	Hub-Pump
7	80-8650	2	Coupling-Drive
8	27-6600	8	Spacer-Coupling
9	3296-47	8	Nut-Lock, NI
10	85-8770	1	Coupling
11	85-8730	1	Hub-Engine
12	3274-52	3	Screw-HSH
13	3257-32	2	Key-Woodruff
14	3241-7	6	Screw-SQH
15	85-9020	1	Key-Square
16	3296-23	2	Nut-Lock, NI
17	340-77	1	Fitting-HYD, 90 DEG
17:1	237-22	1	O-Ring
17:2	237-42	1	O-Ring
18	340-98	2	Fitting-HYD, 90 DEG
18:1	237-79	1	O-Ring
18:2	237-30	1	O-Ring
19	354-126	1	Fitting-HYD, 45 DEG
19:1	237-79	1	O-Ring
20	108-5481	1	Hose-Suction
21	2412-129	2	Clamp-Hose
22	110-1325	1	Hose-Return
23	2412-36	2	Clamp-Hose
24	108-8440	1	Hose ASM
25	108-8428	1	HYD Hose ASM
26	87-8170	1	Fitting
26:1	237-80	1	O-Ring
27	240-4	3	Grommet-Rubber
28	110-1322	1	HYD Hose ASM
29	3256-22	3	Washer-Flat
31	3290-379	4	Tie-Cable
32	340-94	1	Adapter
32:1	237-22	2	O-Ring
32:2	237-42	1	O-Ring

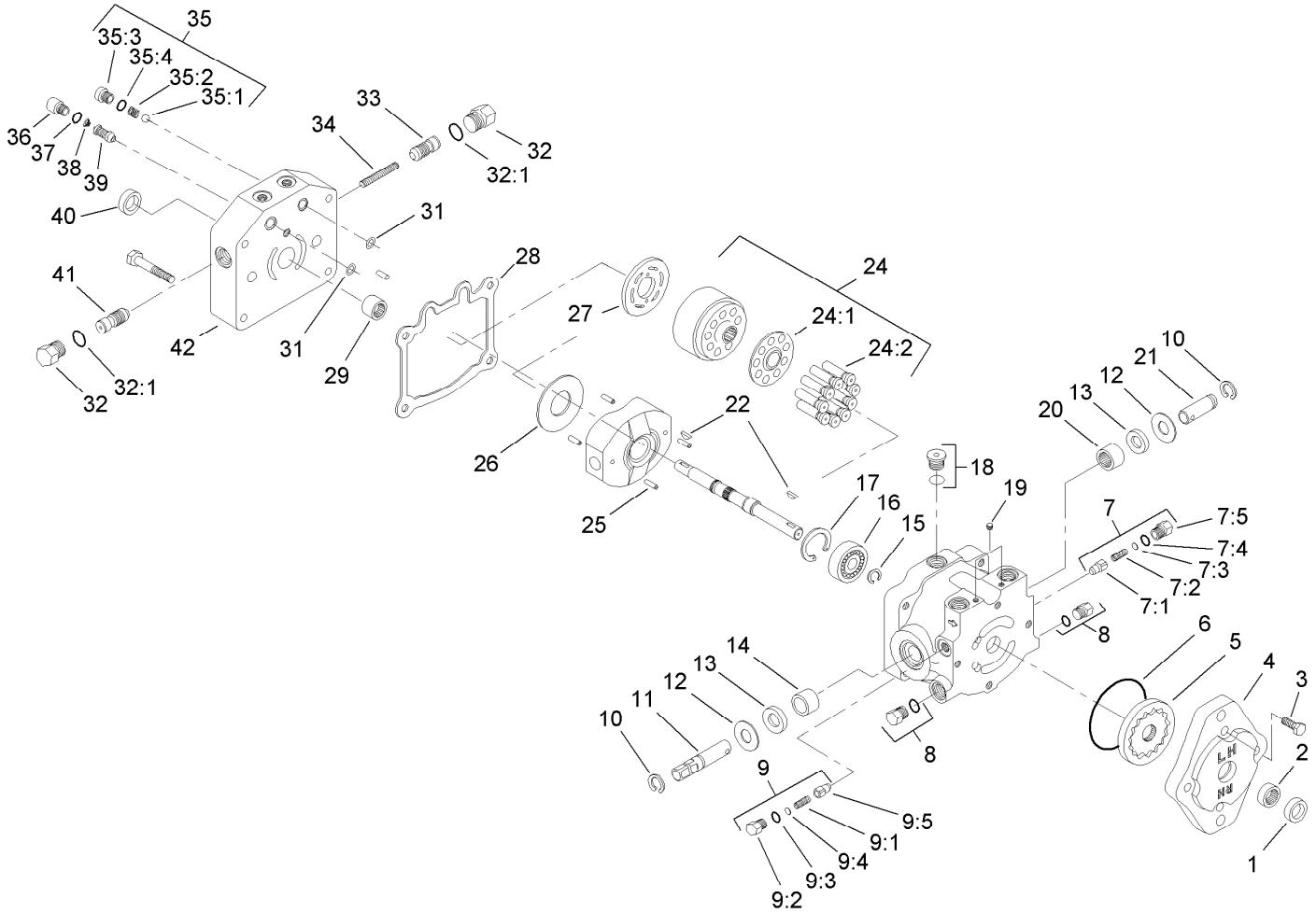

Variable Piston Pump Assembly No. 114-0612

Ref.	Part Number	Qty.	Description
1	110-6337	1	Seal-Lip
2	67-8050	1	Bearing-Needle
3	322-4	4	Screw-HH
4	114-0611	1	Housing-Pump, Charge
5	95-5812	1	Gerotor ASM
6	237-95	1	O-Ring
7	49-8520	1	Implement Relief Kit
7:1	83-7260	1	Cone-Relief, Charge
7:2	25-2570	1	Spring-Valve
7:3	25-2470	1	Pack-Shim
7:4	237-86	1	O-Ring
7:5	25-2460	1	Plug-HH
8	67-8030	2	Plug ASM
9	49-8510	1	Valve Kit
9:1	25-2480	1	Spring-Valve
9:2	25-2460	1	Plug-HH
9:3	237-86	1	O-Ring
9:4	25-2470	1	Pack-Shim
9:5	83-7260	1	Cone-Relief, Charge
10	32151-46	2	Ring-Retaining
11	88-8180	1	Shaft-Trunnion
12	25-2510	2	Washer-Flat
13	25-3210	2	Seal-Lip
14	88-8190	1	Bearing-Journal
15	94-3996	1	Ring-Retaining
16	95-5809	1	Bearing-Ball
17	32151-75	1	Ring-Retaining
18	67-9090	1	Plug ASM
19	75-0160	1	Plug-Pipe
20	110-6339	1	Bearing-Needle
21	25-2500	1	Shaft-Trunnion
22	3257-32	2	Key-Woodruff
24	48-1800	1	Cylinder Block Kit
24:1		1	Retainer-Slipper ●
24:2		9	Piston ASM ●
25	32121-91	4	Pin-Spring
26	25-2510	1	Washer-Flat
27	88-8160	1	Plate-Valve
28	25-2400	1	Gasket
29	110-6341	1	Bearing-Roller
31	112-7652	2	O-Ring
32	28-3440	1	Plug-Threaded
32:1	75-0240	1	O-Ring
33	98-0920	1	Valve-Acceleration
34	25-2610	1	Spring-Valve
35	99-5689	1	Check Valve Kit
35:1	25-2490	1	Ball
35:2	25-2640	1	Spring-Valve
35:3	25-2650	1	Plug-Valve, Check
35:4	237-86	1	O-Ring

● Not serviced separately

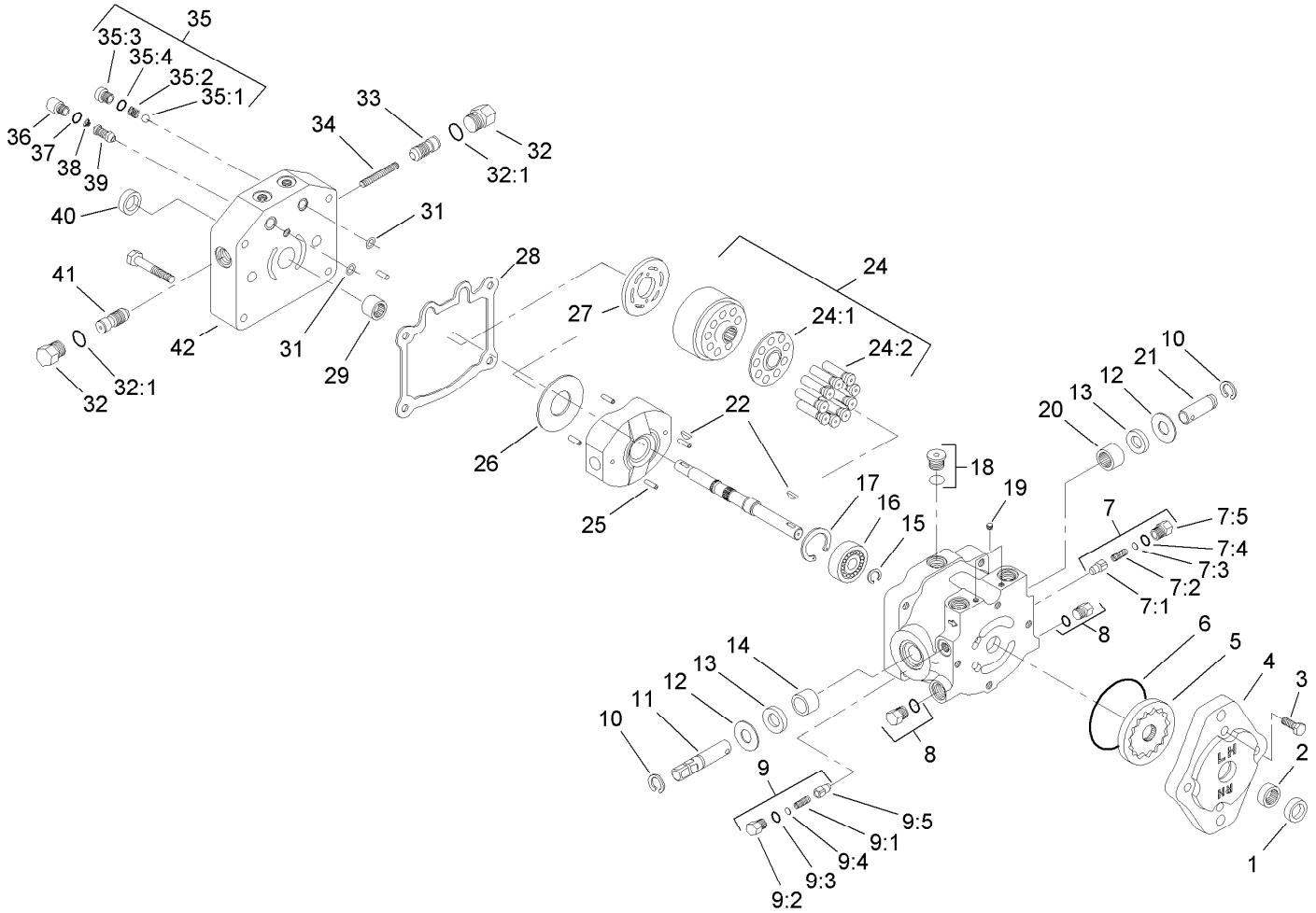

Variable Piston Pump Assembly No. 114-0612 (continued)

Ref.	Part Number	Qty.	Description
36	75-0190	1	Plug-Special
37	75-0240	1	O-Ring
38	110-6342	1	Spring
39	110-6343	1	Valve-Scr

Ref.	Part Number	Qty.	Description
40	88-8230	1	Seal-Lip
41	98-0920	1	Valve-Acceleration
42	112-7651	1	Cap-End

● Not serviced separately

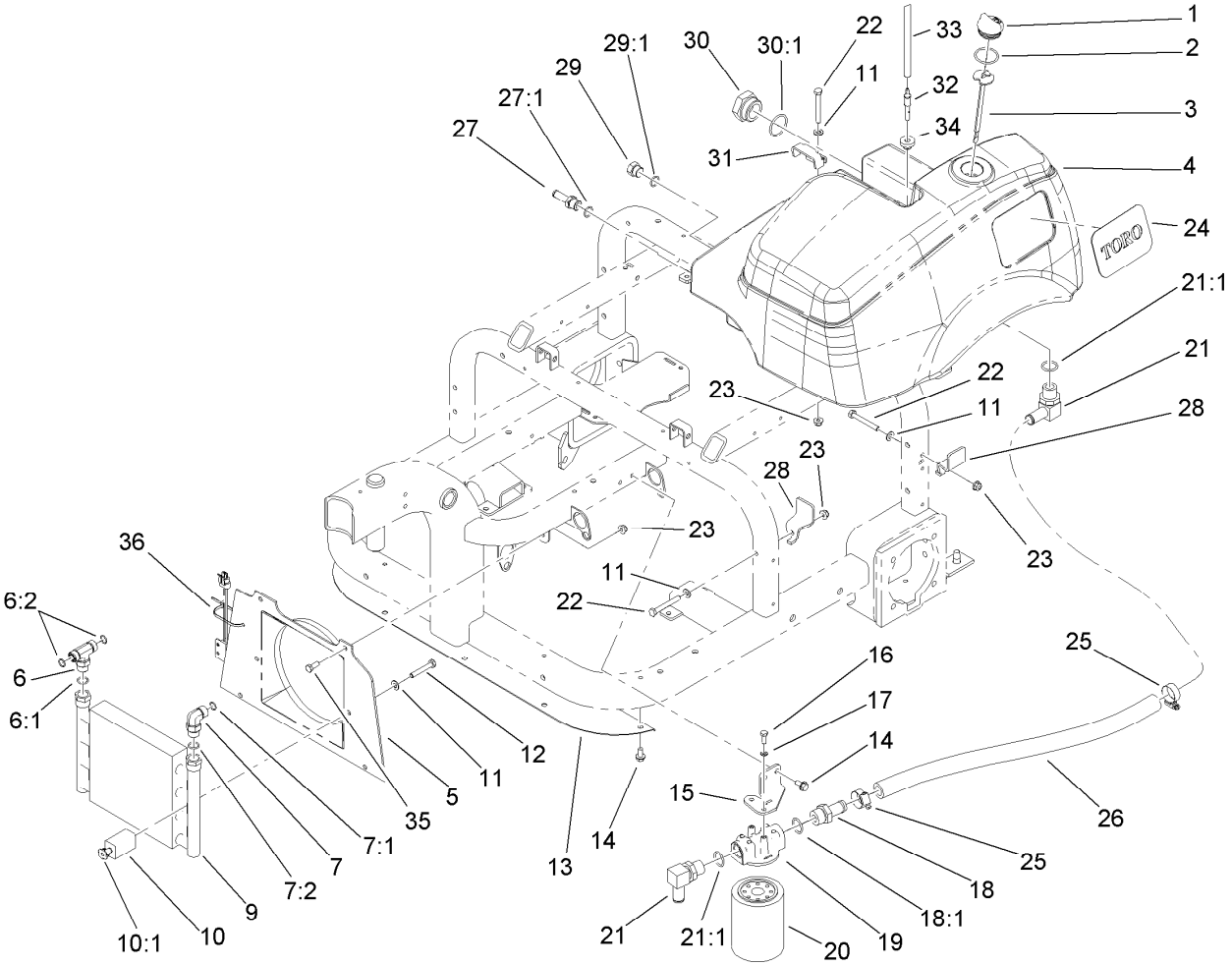

Hydraulic Tank, Filter and Cooler Assembly

Ref.	Part Number	Qty.	Description
1	93-7498	1	Plug-Plastic
2	237-101	1	O-Ring
3	108-7996	1	Dipstick ASM
4	108-2937	1	Tank-HYD
5	108-5477	1	Shroud-Fan
6	340-157	1	Fitting-HYD, Tee
6:1	237-79	1	O-Ring
6:2	237-30	2	O-Ring
7	340-98	1	Fitting-HYD, 90 DEG
7:1	237-79	1	O-Ring
7:2	237-30	1	O-Ring
9	108-8457	1	Cooler-Oil
10	85-9550	2	Rubber Clamp ASM
10:1	85-9670	1	T-Nut
11	3256-23	7	Washer-Flat
12	322-10	2	Screw-HH
13	108-5480-03	1	Panel-Cooler
14	32144-14	7	Screw-HWHTF
15	108-5482	1	Bracket-Filter, Oil
16	321-4	2	Screw-HH
17	3253-3	2	Washer-Lock
18	354-73	1	Fitting-Straight
18:1	237-81	1	O-Ring

Ref.	Part Number	Qty.	Description
19	68-8990	1	Filter Head ASM
20	54-0110	1	Filter-Oil, Transmission
21	353-987	2	Fitting-HYD, 90 DEG (Barbed)
21:1	237-81	1	O-Ring
22	322-12	5	Screw-HH
23	104-8300	9	Nut-Flange, NI
24	108-8452	1	Decal-Logo
25	2412-129	2	Clamp-Hose
26	108-5483	1	Hose-Suction, Tank
27	354-121	1	Fitting-Straight
27:1	237-79	1	O-Ring
28	108-7965	2	Clamp-Tank, HYD
29	353-550	1	Plug-HYD, HH
29:1	237-79	1	O-Ring
30	108-8468	1	Plug-HH
30:1	237-101	1	O-Ring
31	108-7903	1	Clamp-Tank
32	110-1372	1	Fitting-Vent, Tank
33	110-8181	1	Hose-Fuel
34	46-6560	1	Bushing
35	322-3	4	Screw-HH
36	3290-379	1	Tie-Cable

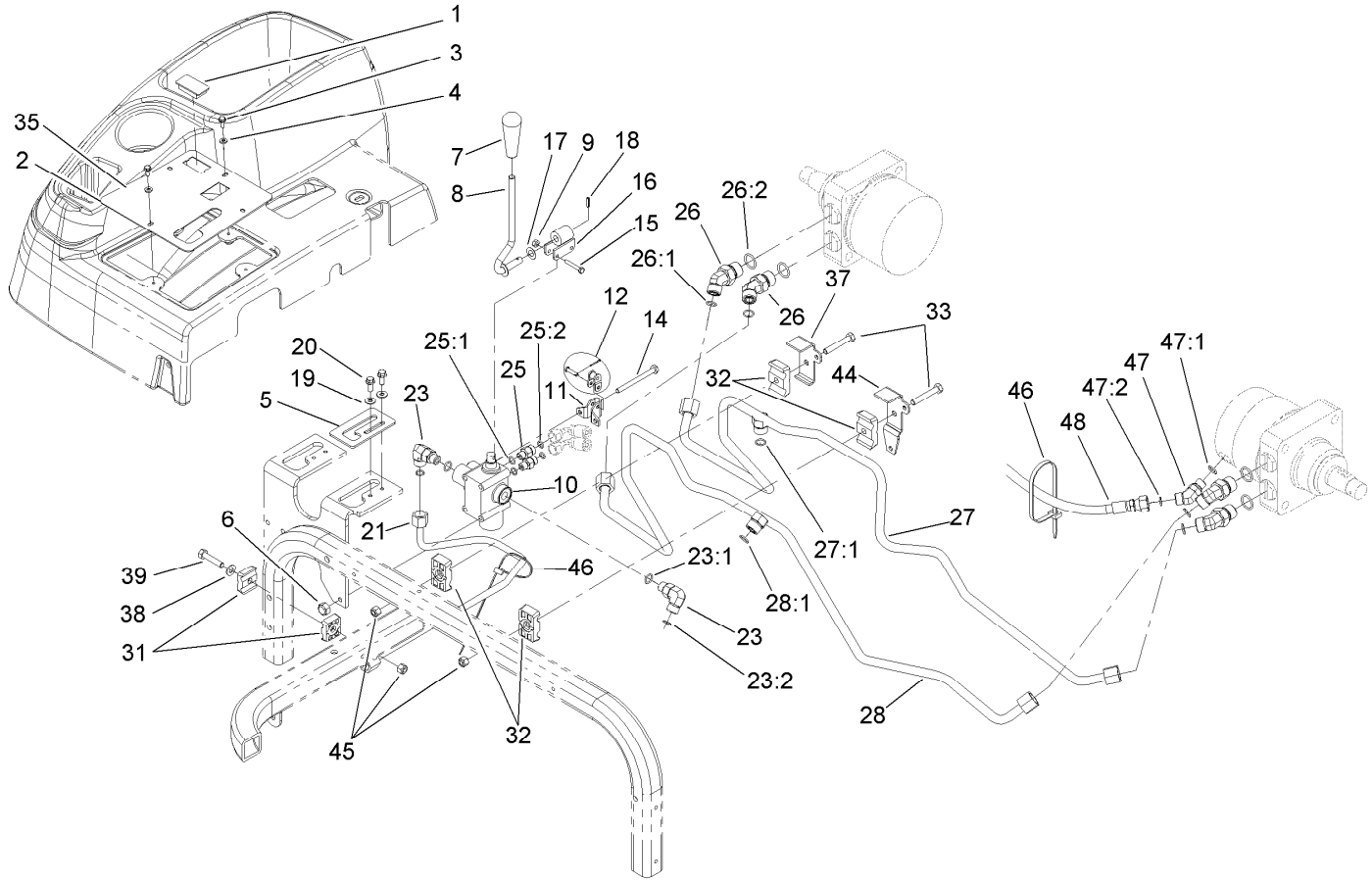

Lift Valve and Rear Tube Assembly

Ref.	Part Number	Qty.	Description
1	99-7420	1	Plug-Hole
2	108-7909-03	1	Panel-Control
3	3290-321	4	Screw-HWH
4	3256-51	4	Washer-Flat
5	108-7941	1	Plate-Guide, Lever
6	3296-42	3	Nut-Lock, NI
7	98-0152	1	Knob-Tapered
8	108-7942	1	Rear Lever ASM
9	3296-2	2	Nut-Lock, NI
10	43-1710	1	Valve ASM
11	88-8480	1	Bracket-Pivot
12	2710-20	1	Link-Offset
14	321-23	3	Screw-HH
15	3290-360	2	Screw-HH
16	98-8159	1	Pivot
17	3290-477	1	Washer-Curved
18	32121-73	1	Pin-Roll
19	3256-1	2	Washer-Flat
20	3234-33	2	Screw-HHF
21	108-8416	1	Tube ASM
23	340-77	2	Fitting-HYD, 90 DEG
23:1	237-22	1	O-Ring
23:2	237-42	1	O-Ring
25	340-92	2	Fitting-HYD, Straight

Ref.	Part Number	Qty.	Description
25:1	237-78	1	O-Ring
25:2	237-21	1	O-Ring
26	340-89	4	Fitting-HYD, 45 DEG
26:1	237-30	1	O-Ring
26:2	237-80	1	O-Ring
27	108-8406	1	Tube ASM
27:1	237-30	1	O-Ring
28	110-1323	1	Tube ASM
28:1	237-30	1	O-Ring
31	56-7973	2	Clamp-Tube
32	56-7976	4	Clamp-Tube
33	322-10	2	Screw-HH
35	108-8484	1	Decal-Lift, Rear
37	110-1333	1	Bracket-Clamp
38	3256-23	1	Washer-Flat
39	322-7	1	Screw-HH
44	110-1332	1	Bracket-Clamp
45	3296-29	3	Nut-Lock, NI
46	3290-378	2	Tie-Cable
47	340-87	1	Fitting-HYD, 45 DEG
47:1	237-22	1	O-Ring
47:2	237-42	1	O-Ring
48	112-1411	1	Hose-HYD

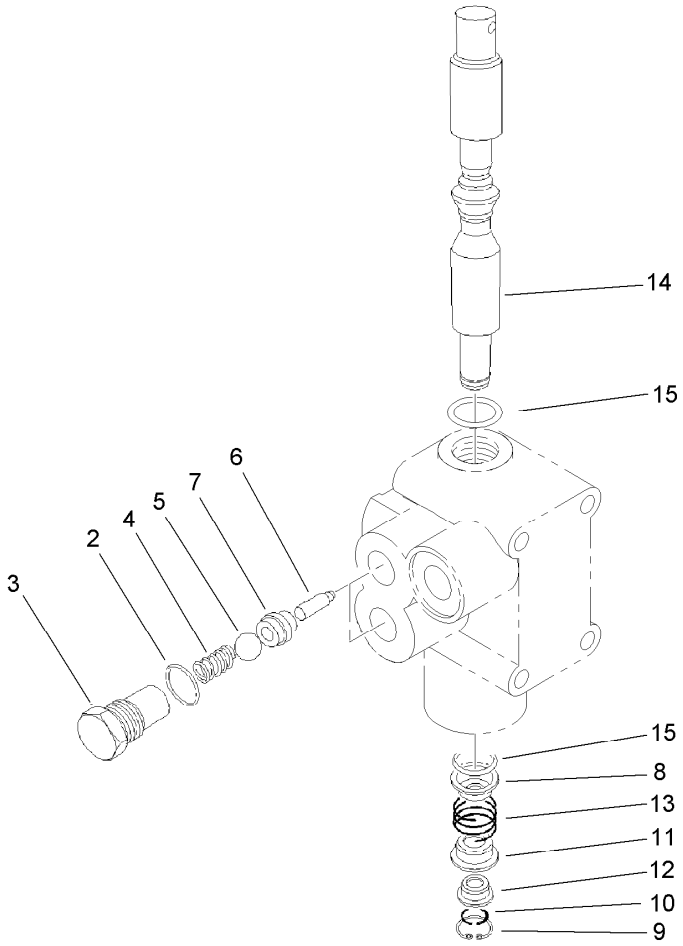

Valve Assembly No. 43-1710

Ref.	*Part Number*	*Qty.*	*Description*
2	237-42	2	O-Ring
3	22-8330	2	Plug
4	22-8340	2	Spring
5	22-8350	2	Ball
6	22-8360	2	Pin
7	22-8370	2	Seat-Valve
8	22-8380	1	Retainer
9	22-8490	1	Ring-Snap
10	22-8480	1	Ring-Snap
11	22-8390	1	Retainer
12	22-8400	1	Spacer
13	22-8410	1	Spring
14	22-8420	1	Spool
15	22-8500	2	O-Ring

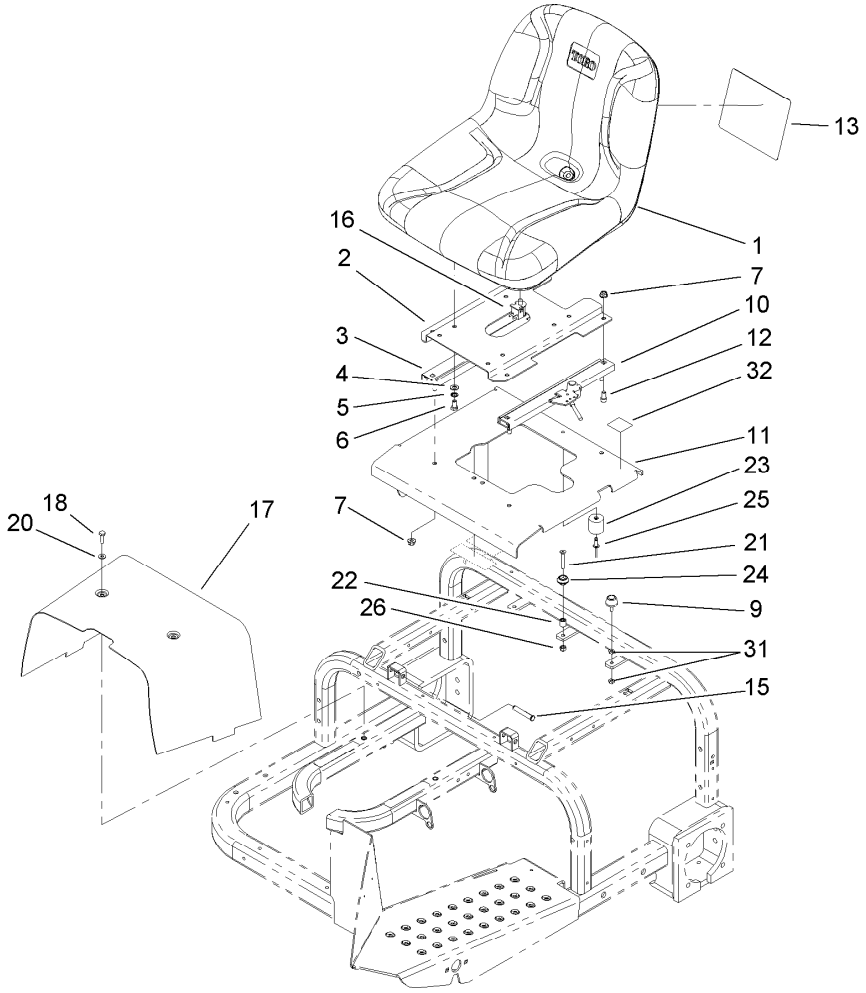

Seat and Shroud Assembly

Ref.	Part Number	Qty.	Description
1	108-6878	1	Seat
2	108-7931-03	1	Base-Seat
3	51-0780	1	Slider-Seat
4	3256-23	4	Washer-Flat
5	3254-2	4	Washer-Lock, Internal
6	322-2	4	Screw-HH
7	104-8300	8	Nut-Flange, NI
9	1-523420	2	Bumper
10	51-0790	1	Adjuster-Seat, LH
11	112-1445-03	1	Seat ASM
12	3274-12	4	Screw-HSH
13	108-8418	1	Decal-Service
15	112-7153	2	Pin

Ref.	Part Number	Qty.	Description
16	82-2190	1	Switch-Bail
17	108-6859-01	1	Shroud-Center
18	321-5	2	Screw-HH
20	3256-1	2	Washer-Flat
21	32108-9	1	Screw-FH
22	609588	1	Spacer
23	99-7830	1	Rubber Receptical ASM
24	99-7833	1	Post-Holding
25	3290-412	1	Rivet
26	3296-42	1	Nut-Lock, NI
31	3218-1	4	Nut-Jam
32	105-2699	1	Decal-Noise

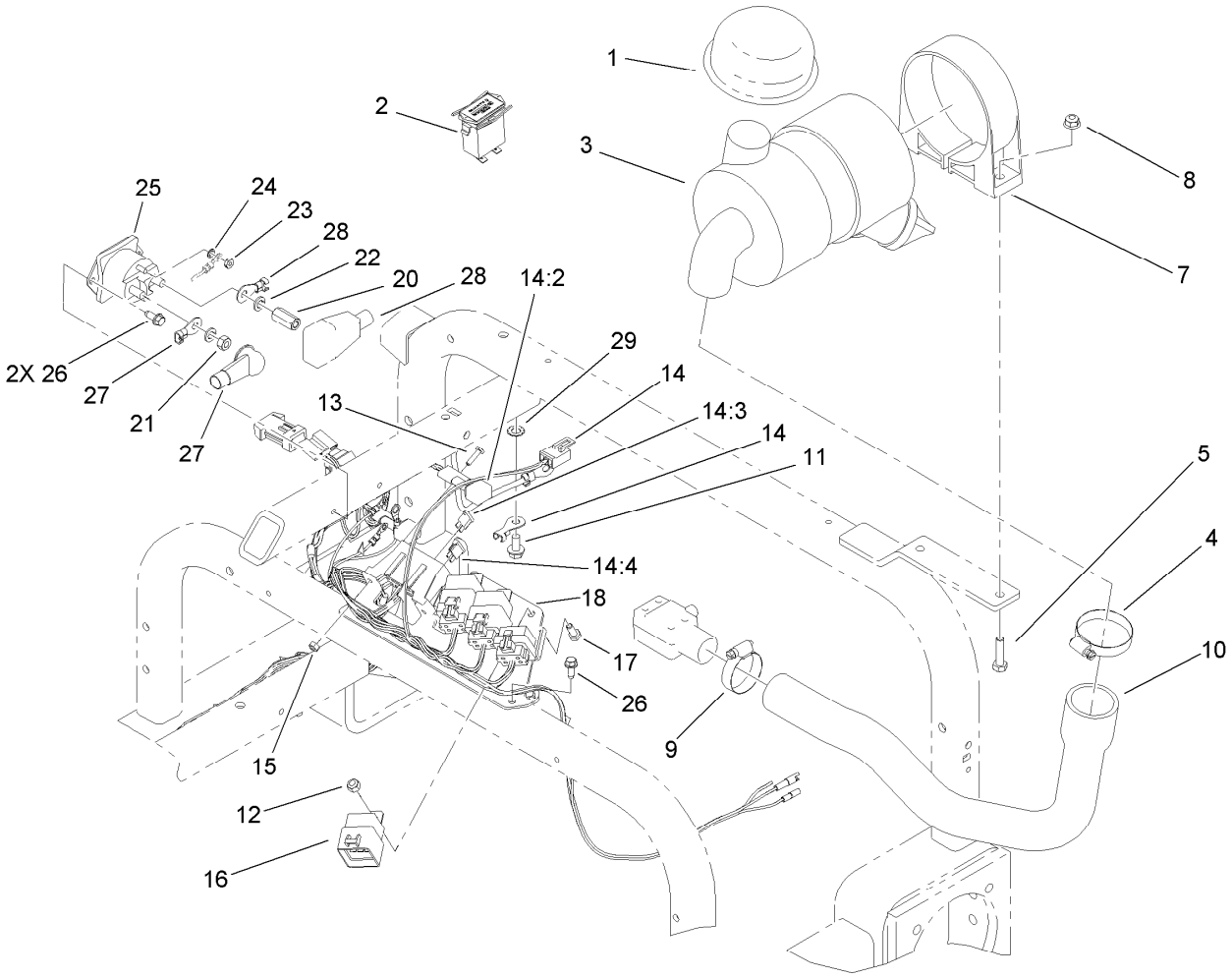

Wire Harness, Air Cleaner and Hose Assembly

Ref.	Part Number	Qty.	Description
1	46-7510	1	Hood-Inlet, Air
2	1-513374	1	Meter-Hour
3	93-2190	1	Air Cleaner ASM
4	2412-92	1	Clamp-Hose
5	322-6	2	Screw-HH
7	95-5806	1	Bracket-Mounting
8	104-8300	2	Nut-Flange, NI
9	2412-3	1	Clamp-Hose
10	108-8401	1	Hose-Air
11	32144-14	1	Screw-HWHTF
12	3296-42	3	Nut-Lock, NI
13	3250-13	2	Screw-PPH
14	112-1446	1	Harness-Wire
14:2	100-4918	2	Diode
14:3	218-578	1	Fuse-Blade, 10 Amp

Ref.	Part Number	Qty.	Description
14:4	109355	1	Fuse-Blade, 15 Amp
15	3296-2	2	Nut-Lock, NI
16	99-7430	3	Relay
17	321-3	3	Screw-HH
18	112-1444-01	1	Bracket-Relay
20	110-3380	1	Nut-Standoff
21	3218-13	1	Nut-Jam, Brass
22	3253-4	2	Washer-Lock
23	3219-14	2	Nut-Hex
24	3254-1	2	Washer-Lock, Int
25	28-4210	1	Solenoid
26	32144-10	4	Screw-HWH
27	110-3315	1	Cable-Positive, Starter
28	110-3314	1	Cable-Positive, Battery
29	3255-9	1	Washer-Lock

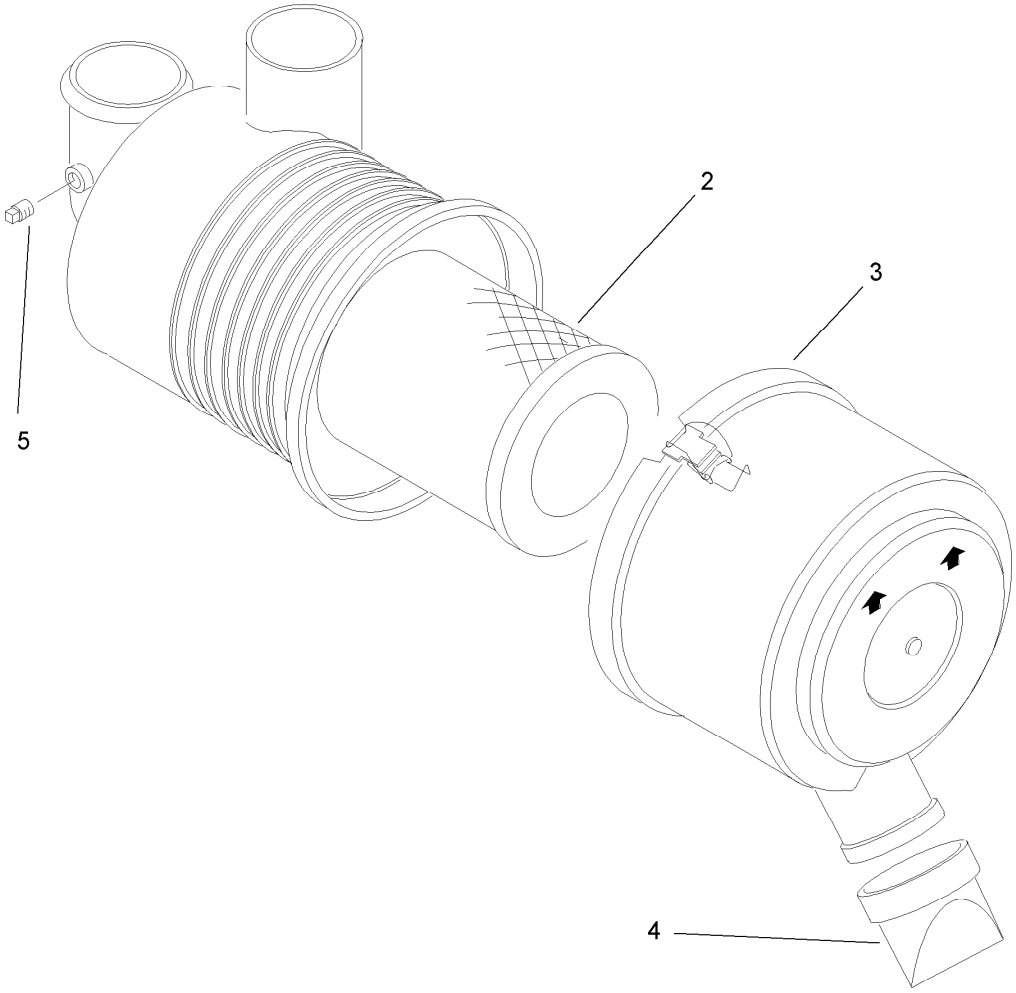

Air Cleaner Assembly No. 93-2190

Ref.	*Part Number*	*Qty.*	*Description*
2	108-3811	1	Filter-Air
3	94-3652	1	Cover ASM
4	87-9400	1	Valve-Vacuator
5	285-17	1	Plug-Pipe

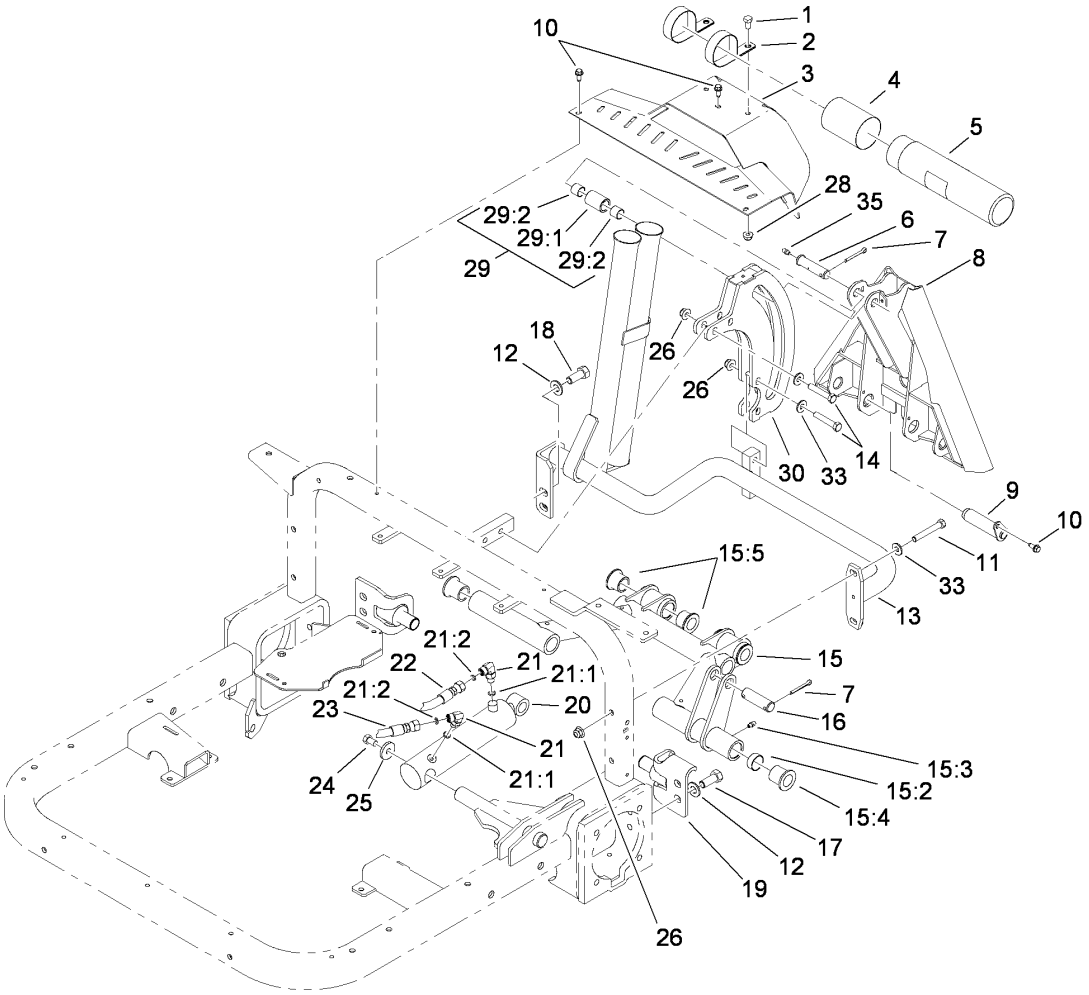

Rear Hitch Assembly

Ref.	Part Number	Qty.	Description
1	322-2	2	Screw-HH
2	2412-133	2	R-Clamp
3	108-7970-01	1	Rear Cover ASM
4	104-7048	1	Cap-Housing
5	104-7050	1	Tube-Manual
6	108-2282	1	Pin-Clevis
7	3272-23	3	Pin-Cotter
8	108-6870-01	1	Adapter ASM
9	108-6885	2	Pin ASM
10	32144-10	5	Screw-HWH
11	323-12	2	Screw-HH
12	3256-26	4	Washer-Flat
13	108-6860-03	1	Hitch Frame ASM
14	323-10	4	Screw-HH
15	110-3375	1	Rear Tube ASM
15:2	110-3365	2	Plug-Expansion
15:3	302-5	4	Fitting-Grease
15:4	95-3577	2	Bushing
15:5	33-3090	4	Bushing
16	18-7310	1	Pin-Cylinder

Ref.	Part Number	Qty.	Description
17	325-4	2	Screw-HH
18	325-5	2	Screw-HH
19	114-0619	2	Pivot Pin ASM
20	110-1338	1	Hydraulic Cylinder ASM
21	340-132	2	Fitting-HYD, 90 DEG
21:1	237-78	1	O-Ring
21:2	237-21	1	O-Ring
22	95-8837	1	Hose ASM
23	100-3833	1	HYD Hose ASM
24	323-34	1	Screw-HH
25	53-6380	1	Washer-Flat
26	104-8301	6	Nut-Flange, NI
28	104-8300	2	Nut-Flange, NI
29	108-5472	1	Tube ASM
29:1		1	Tube-Roller ●
29:2	256-311	2	Bushing-Split
30	110-1368-01	1	Roller Plate ASM
33	3256-3	6	Washer-Flat
35	302-5	1	Fitting-Grease

● Not serviced separately

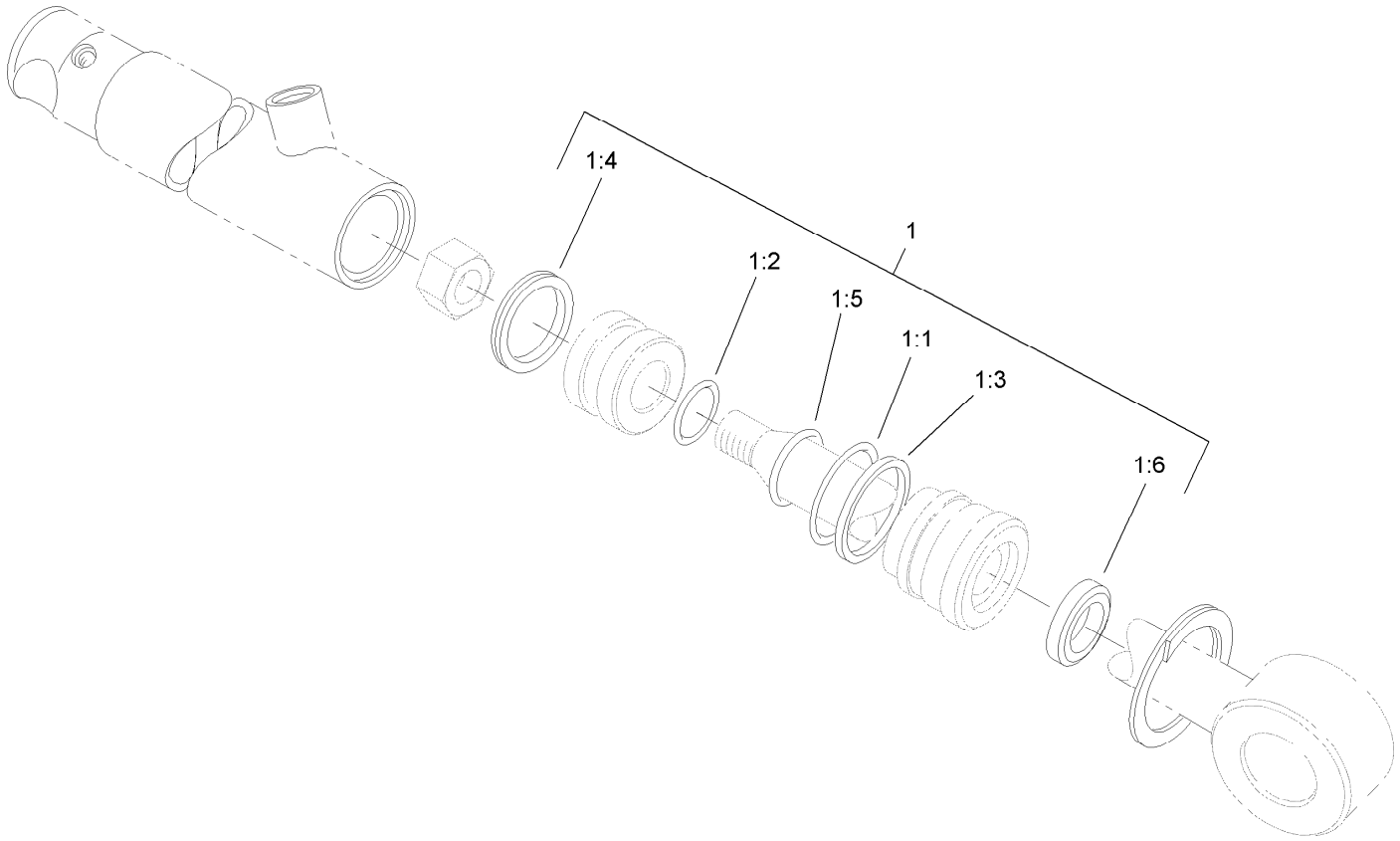

Hydraulic Cylinder Assembly No. 110-1338

Ref.	*Part Number*	*Qty.*	*Description*
1	108-4597	1	Seal Kit
1:1		1	O-Ring ●
1:2		1	O-Ring ●
1:3		1	Ring-Back Up ●
1:4		1	Seal-Psp ●
1:5		1	Seal-Rod ●
1:6		1	Seal-Dust ●

● Not serviced separately

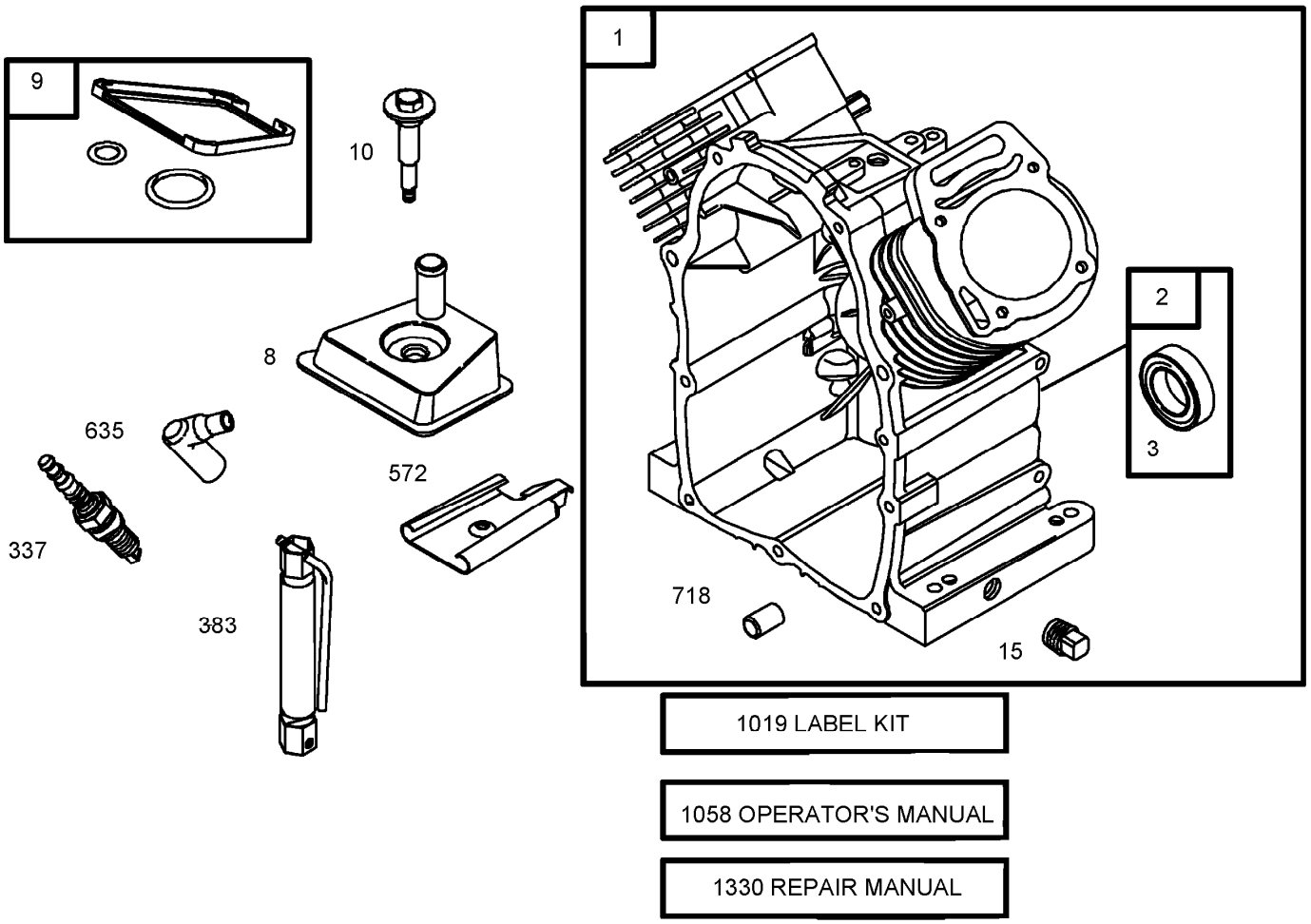

Cylinder Assembly
Briggs and Stratton 356447-0179-E1

Ref.	*Part Number*	*Qty.*	*Description*
1	692544	1	Cylinder ASM ●
2	808534	1	Bushing-Seal Kit ●
3	805101	1	Seal-Oil ● ■
8	808984	1	Breather ASM ●
9	809094	1	Gasket-Breather ● ■
10	690751	1	Screw ●
15	690946	1	Plug-Drain, Oil ●
337	496018	1	Spark Plug ●
383	19374	1	Wrench-Spark Plug ●
572	690686	1	Baffle-Breather ●
635	692076	1	Boot-Spark Plug ●
718	806469	1	Pin-Locating ●
1019	808036	1	Label Kit ●
1058	276343	1	Operator Manual ●
1330	272144	1	Repair Manual ●

● Obtain parts from www.briggsandstratton.com

■ Included in Engine Gasket Set (Ref. No. 358)

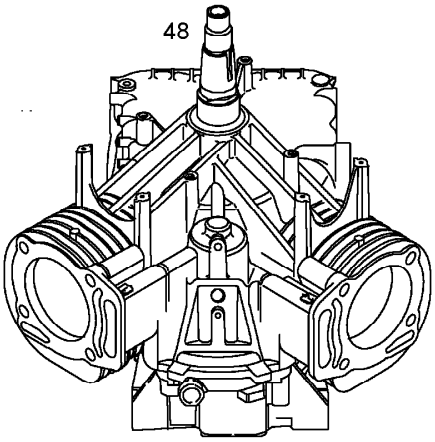

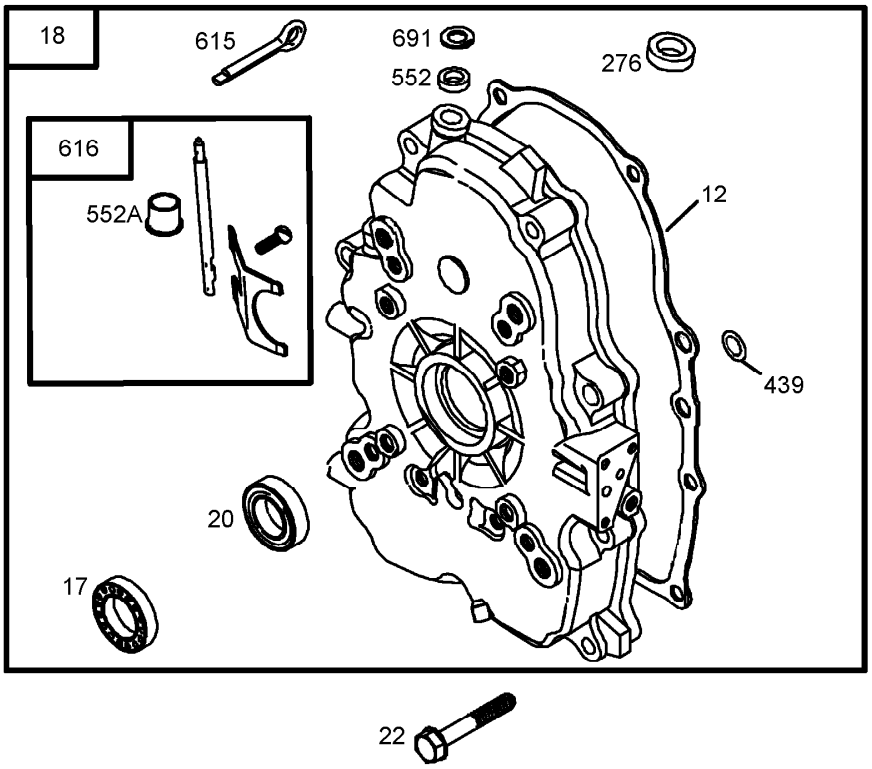

Crankcase Assembly
Briggs and Stratton 356447-0179-E1

Ref.	*Part Number*	*Qty.*	*Description*
12	842589	1	Gasket-Crankcase ● ■
17	690752	1	Bearing-Ball ●
18	808847	1	Cover-Crankcase ●
20	805049	1	Seal-Oil ● ■
22	807362	1	Screw ●
48		1	Short Block (Part No. Not Available At Time Of Printing) ●
276	690724	1	Washer-Sealing ●
439	692154	1	Seal-O Ring ● ■
552	690701	1	Bushing-Crank, Governor ●
552A	806686	1	Bushing-Crank, Governor ●
615	691550	1	Retainer-Shaft, Governor ●
616	806685	1	Crank-Governor ●
691	690680	1	Seal-Shaft, Governor ● ■

● Obtain parts from www.briggsandstratton.com

■ Included in Engine Gasket Set (Ref. No. 358)

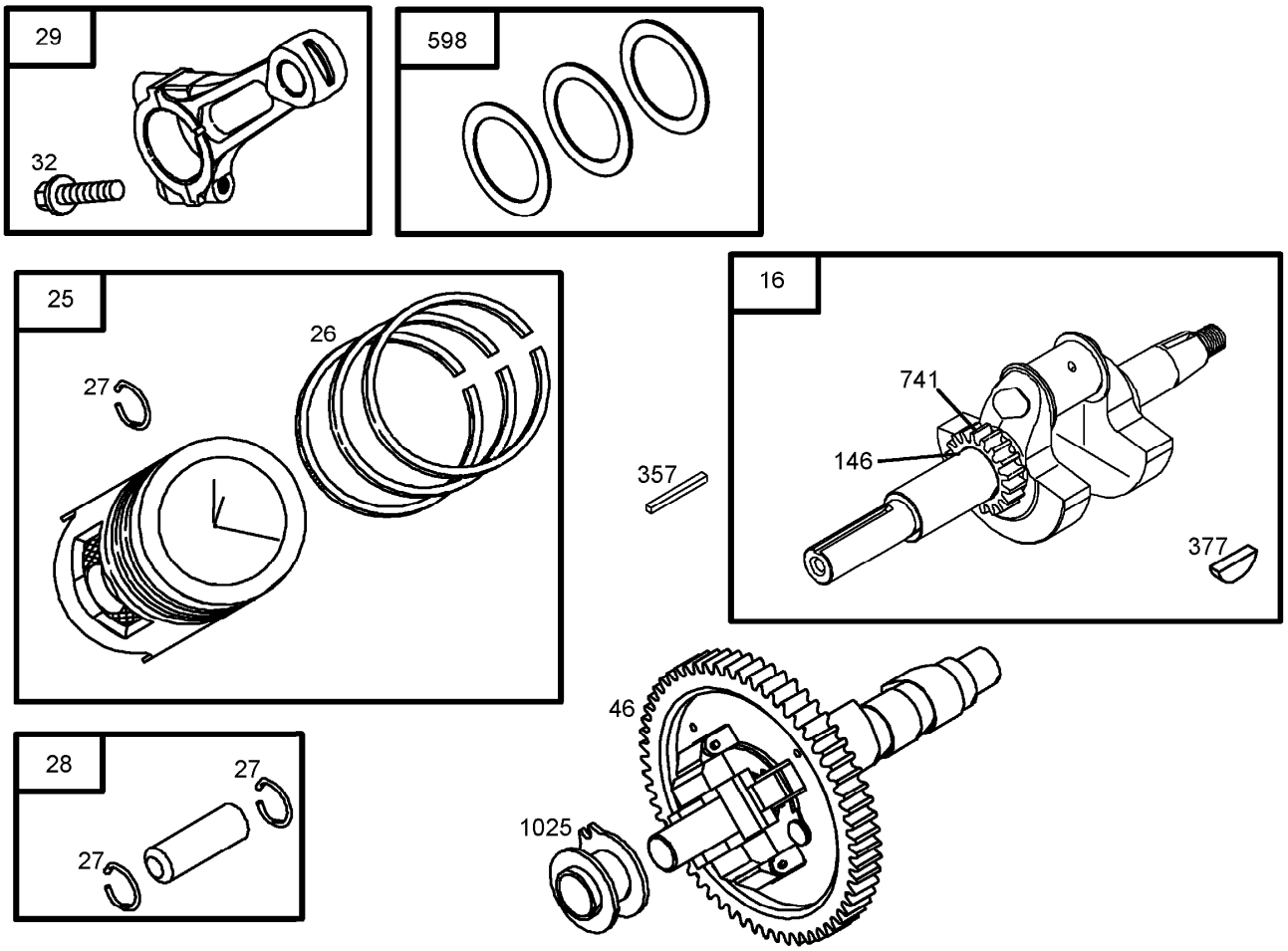

Crankshaft Assembly
Briggs and Stratton 356447-0179-E1

Ref.	*Part Number*	*Qty.*	*Description*
16	809836	1	Crankshaft ●
25	808326	1	Piston ASM (Standard) ●
25	808337	1	Piston ASM (.020 O.S.) ●
26	807889	1	Ring Set (Standard) ●
26	807995	1	Ring Set (.020 O.S.) ●
27	690683	1	Lock-Pin, Piston ●
28	807886	1	Pin-Piston ●
29	807900	1	Rod-Connecting (Standard) ●
29	807803	1	Rod-Connecting (.020 Undersize) ●
32	690698	1	Screw ●
46	691557	1	Camshaft ●
146	691639	1	Key-Timing ●
357	691483	1	Key pulley , Drive ●
377	808095	1	Key-Woodruff ●
598	807625	1	Shim-Play, End ●
741	691530	1	Gear-Timing ●
1025	690689	1	Spool-Governor ●

● Obtain parts from www.briggsandstratton.com

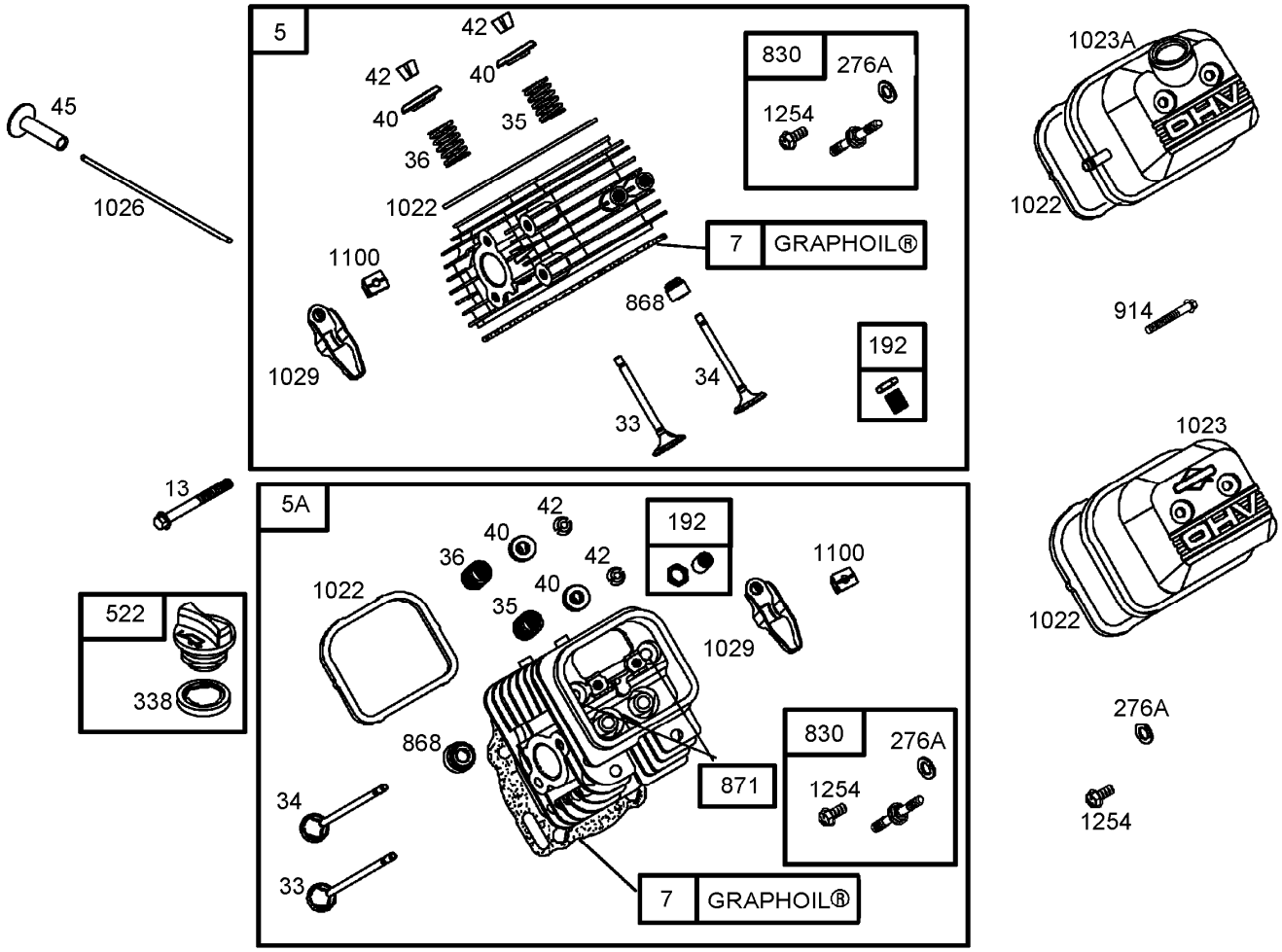

Cylinder Head Assembly
Briggs and Stratton 356447-0179-E1

Ref.	Part Number	Qty.	Description
5	809185	1	Cylinder Head (No. 1) ●
5A	809186	1	Cylinder Head (No. 2) ●
7	690888	1	Gasket-Head, Cylinder ●■▲
13	692059	1	Screw ●
33	807681	1	Valve-Exhaust ●
34	807680	1	Valve-Intake ●
35	692084	1	Spring-Valve ●
36	692084	1	Spring-Valve ●
40	692058	1	Retainer-Valve ●
42	807683	1	Keeper-Valve ●
45	690977	1	Tappet-Valve ●
192	807623	1	Adjuster-Arm, Rocker ●
276A	807085	1	Washer-Sealing ●■▲
338	691312	1	Seal-O Ring ●■▲

Ref.	Part Number	Qty.	Description
522	491832	1	Plug-Fill, Dipstick ●
830	809157	1	Stud-Arm, Rocker ●
868	691963	1	Seal-Valve ●■▲
871	692057	1	Bushing-Guide, Valve ●
914	807120	1	Screw ●
1022	806039	1	Gasket-Cover, Rocker ●■▲
1023	691494	1	Cover-Valve ●
1023A	690910	1	Cover-Valve ●
1026	691836	1	Rod-Push ●
1026	691758	1	Rod-Push ●
1029	807323	1	Arm-Rocker ●
1100	791959	1	Pivot-Arm, Rocker ●
1254	807084	1	Screw ●

● Obtain parts from www.briggsandstratton.com
▲ Included in Valve Gasket Set (Ref. No. 1095)
■ Included in Engine Gasket Set (Ref. No. 358)

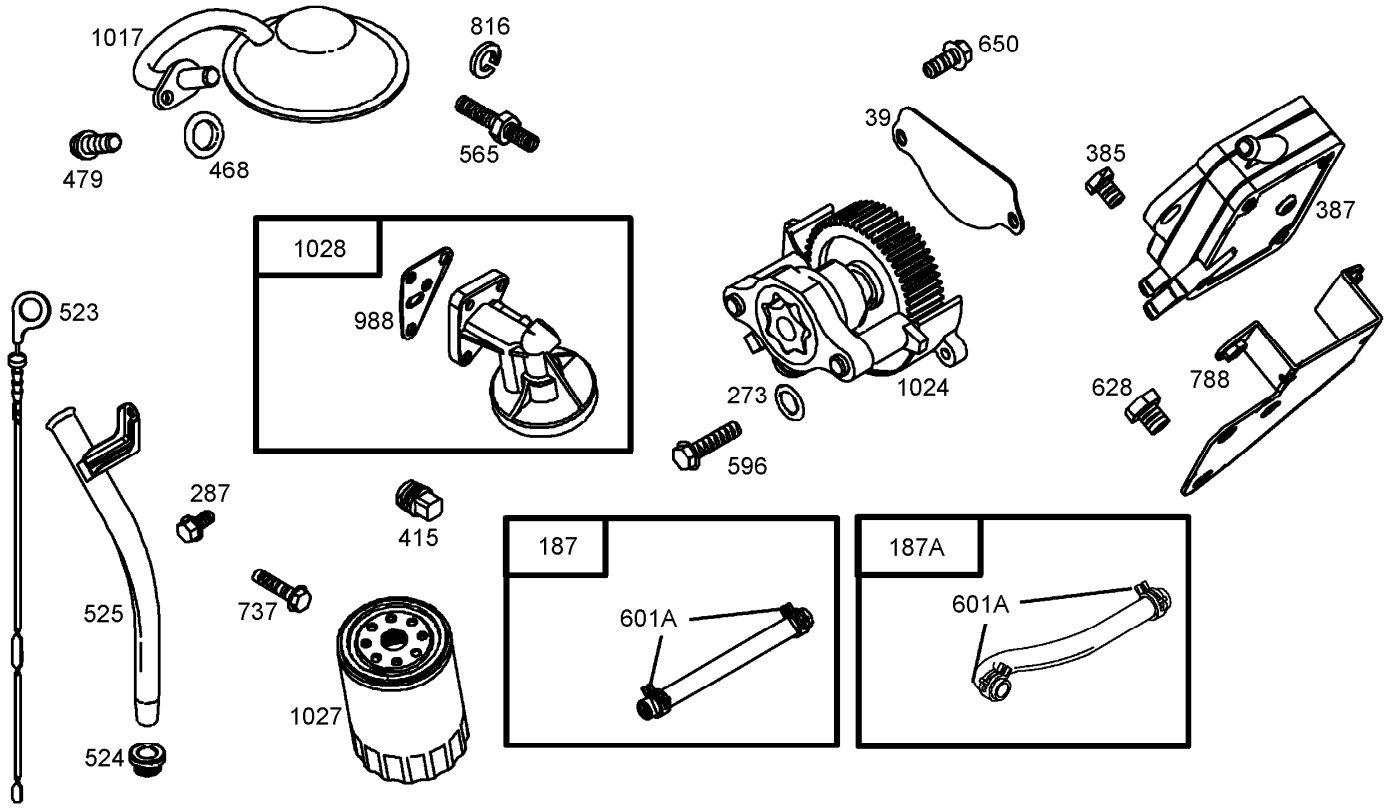

Oil Filter, Tube and Pump Assembly
Briggs and Stratton 356447-0179-E1

Ref.	Part Number	Qty.	Description
39	690745	1	Deflector-Oil ●
187	791766	1	Line-Fuel ●
187A	791744	1	Line-Fuel ●
273	690681	1	Seal-O Ring ● ■
287	692062	1	Screw ●
385	807084	1	Screw ●
387	808969	1	Pump-Fuel ●
415	690283	1	Plug-Oil ●
468	690690	1	Seal-O Ring ● ■
479	807084	1	Screw ●
523	693175	1	Dipstick ●
524	693172	1	Seal-Tube, Dipstick ● ■
525	693174	1	Tube-Dipstick ●
565	690682	1	Stud ●

Ref.	Part Number	Qty.	Description
596	691492	1	Screw ●
601A	691038	1	Clamp-Hose ●
628	692062	1	Screw ●
650	692539	1	Screw ●
737	690679	1	Screw ●
788	691559	1	Bracket-Pump, Fuel ●
816	690706	1	Washer ●
988	692063	1	Gasket-Adapter, Oil Filter ● ■
1017	690900	1	Screen-Pump, Oil ●
1024	693185	1	Pump-Oil ●
1027	492932	1	Filter-Oil ●
1028	808235	1	Adapter-Filter, Oil ●

● Obtain parts from www.briggsandstratton.com

■ Included in Engine Gasket Set (Ref. No. 358)

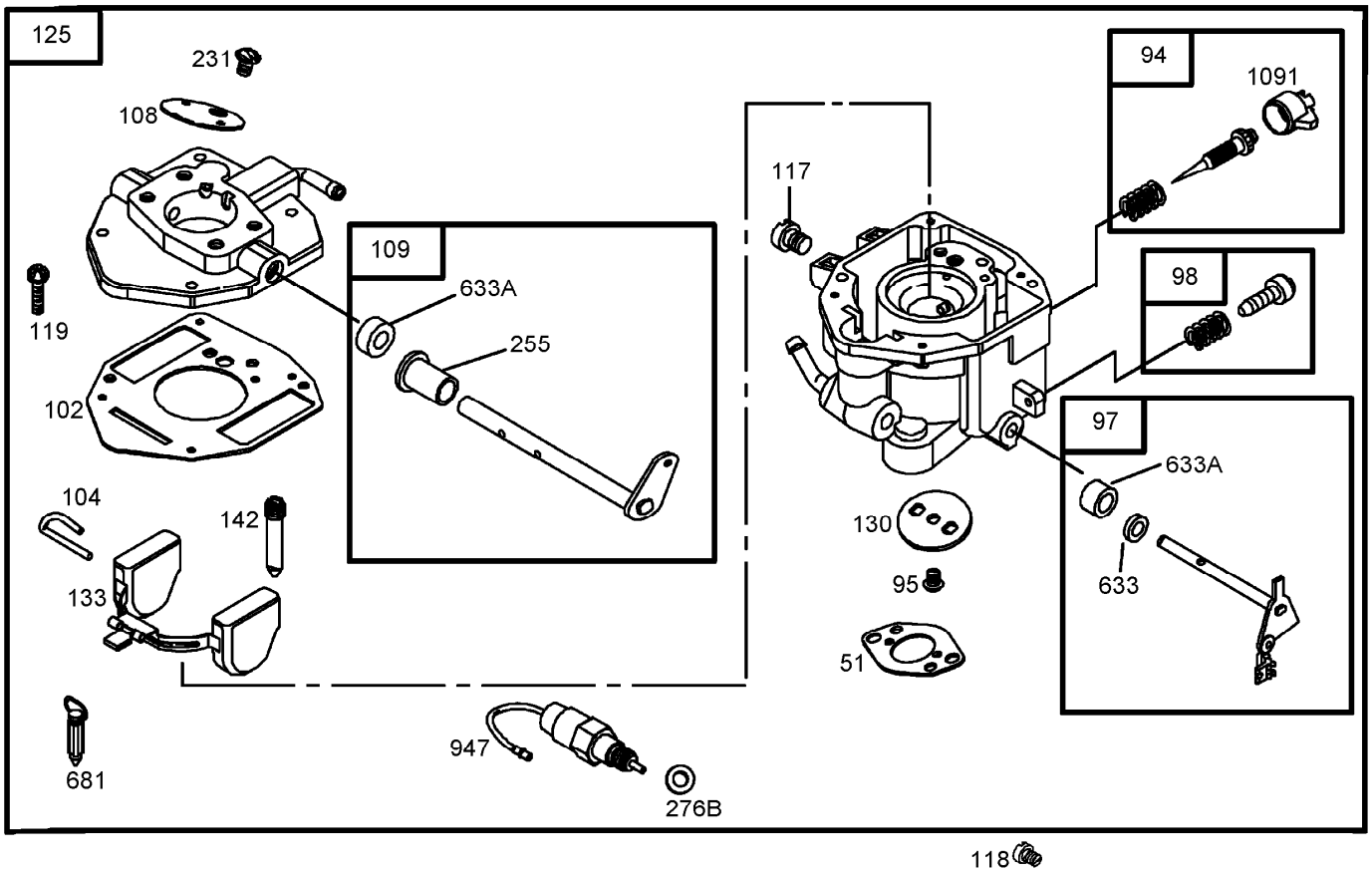

Carburetor Assembly
Briggs and Stratton 356447-0179-E1

Ref.	Part Number	Qty.	Description
51	691694	1	Gasket-Intake ●■
94	808399	1	Idle Mixture Kit ●▲
95	690718	1	Screw ●
97	842734	1	Shaft-Throttle ●
98	808981	1	Idle Speed Kit ●
102	692077	1	Gasket-Body, Carburetor ●▲
104	690723	1	Pin-Hinge, Float ●▲
108	806134	1	Valve-Choke ●
109	808398	1	Shaft-Choke ●
117	806126	1	Jet-Main ●▲
118	809685	1	Jet-Main (High Altitude) ●
119	690720	1	Screw ●
125	842733	1	Carburetor ●
130	806132	1	Valve-Throttle ●
133	806961	1	Float-Carburetor ●
142	806128	1	Nozzle-Carburetor ●
231	690718	1	Screw ●
255	690721	1	Bushing-Shaft, Choke ●▲
276B	806137	1	Washer-Sealing ●■
633	806131	1	Seal-Shaft, Choke Throttle ●▲
633A	690722	1	Seal-Shaft, Choke Throttle ●▲
681	808798	1	Valve-Needle, Float ●▲
947	692094	1	Solenoid-Fuel ●
1091	691516	1	Cap-Limiter ●▲

● Obtain parts from www.briggsandstratton.com
▲ Included in Carburetor Overhaul Kit (Ref. No. 121)
■ Included in Engine Gasket Set (Ref. No. 358)

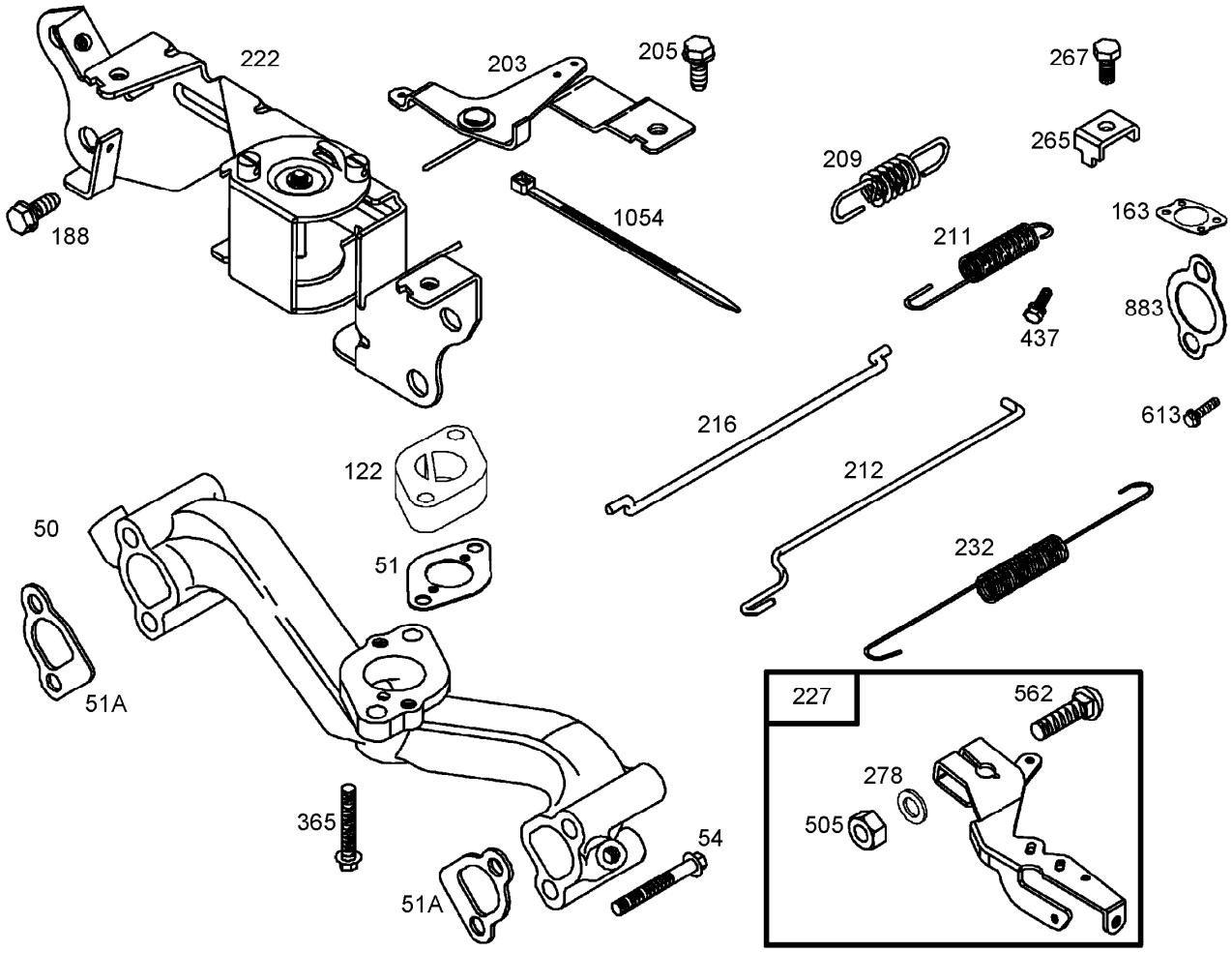

Governor Assembly
Briggs and Stratton 356447-0179-E1

Ref.	Part Number	Qty.	Description
50	690754	1	Manifold-Intake ●
51	691694	1	Gasket-Intake ●■
51A	692035	1	Gasket-Intake ●■▲
54	690676	1	Screw ●
122	690691	1	Spacer-Carburetor ●
163	692081	1	Gasket-Cleaner, Air ●
188	692056	1	Screw ●
203	690923	1	Crank-Bell ●
205	692083	1	Screw ●
209	692071	1	Spring-Governor ●
211	692069	1	Spring-Idle, Governed ●
212	690712	1	Link-Throttle ●
216	690705	1	Link-Choke ●

Ref.	Part Number	Qty.	Description
222	808454	1	Bracket-Control ●
227	690236	1	Lever-Control, Governor ●
232	692073	1	Spring-Link, Governor ●
265	691024	1	Clamp-Casing ●
267	692083	1	Screw ●
278	842122	1	Washer ●
365	690711	1	Screw ●
437	691902	1	Screw ●
505	690238	1	Nut ●
562	690239	1	Bolt ●
613	691902	1	Screw ●
883	691613	1	Gasket-Exhaust ●■▲
1054	280275	1	Tie-Cable ●

● Obtain parts from www.briggsandstratton.com
▲ Included in Valve Gasket Set (Ref. No. 1095)
■ Included in Engine Gasket Set (Ref. No. 358)

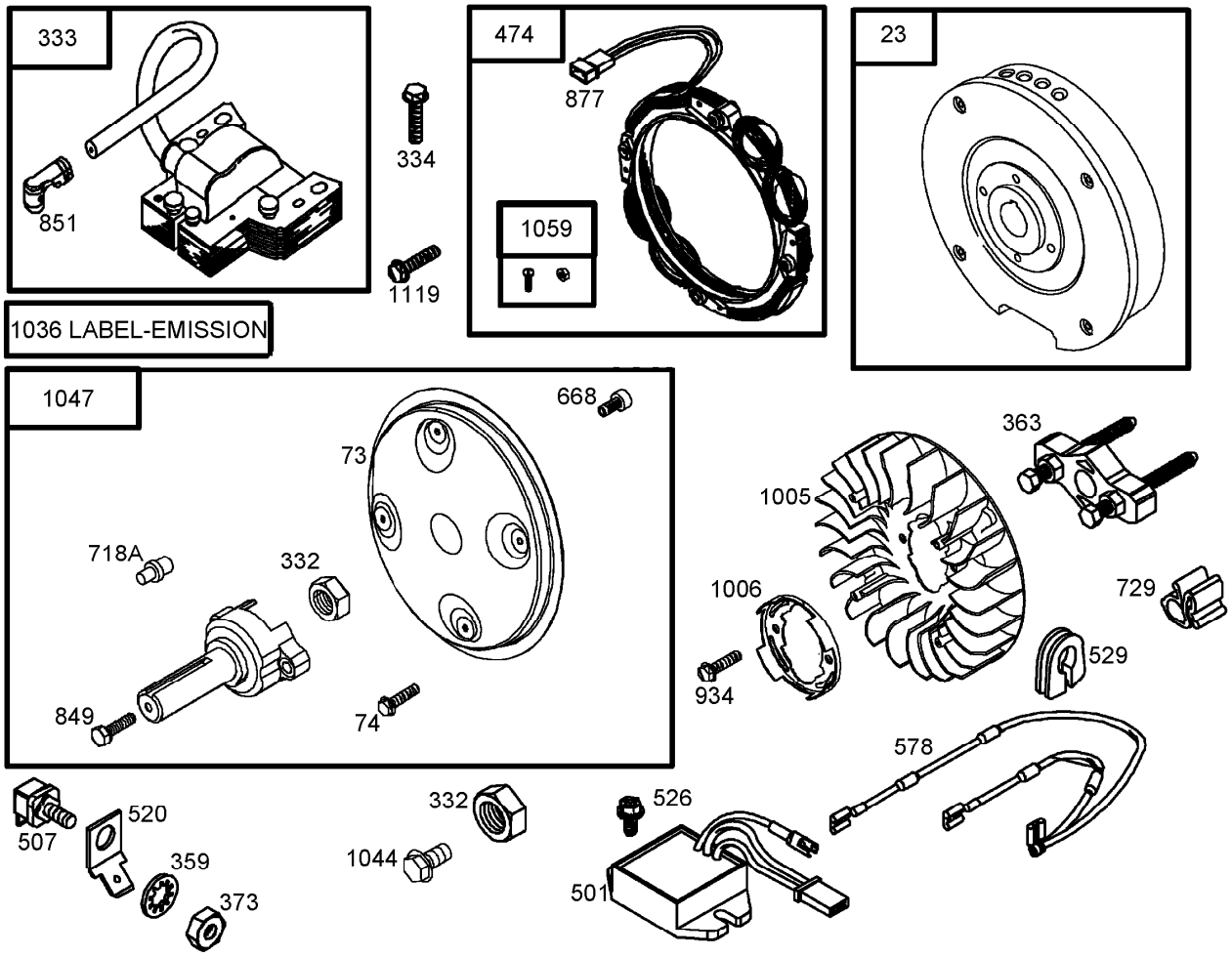

Flywheel Assembly
Briggs and Stratton 356447-0179-E1

Ref.	Part Number	Qty.	Description
23	809236	1	Flywheel ●
73	841582	1	Screen-Rotating ●
74	841441	1	Screw ●
332	690887	1	Nut ●
333	492341	1	Armature-Magneto ●
334	692066	1	Screw ●
359	691077	1	Washer ●
363	19203	1	Puller-Flywheel ●
373	691612	1	Nut ●
474	696458	1	Alternator ●
501	691185	1	Regulator ●
507	691972	1	Insulator ●
520	691084	1	Terminal-Ground ●
526	692067	1	Screw ●
529	690744	1	Grommet ●
578	692319	1	Wire ASM ●

Ref.	Part Number	Qty.	Description
668	691500	1	Spacer ●
718A	841581	1	Pin-Locating ●
729	690586	1	Clip-Wire ●
849	691088	1	Screw (Stub Shaft) ●
851	493880	1	Terminal-Spark Plug ●
877	399916	1	Connector-Wire, Alternator ●
934	691058	1	Screw ●
1005	841439	1	Fan flywheel ●
1006	690452	1	Retainer-Fan ●
1036	842669	1	Label emission ●
1044	692056	1	Screw ●
1047	841580	1	Shaft-Stub ●
1059	698516	1	Screw And Washer Kit ●
1119	691552	1	Screw ●

● Obtain parts from www.briggsandstratton.com

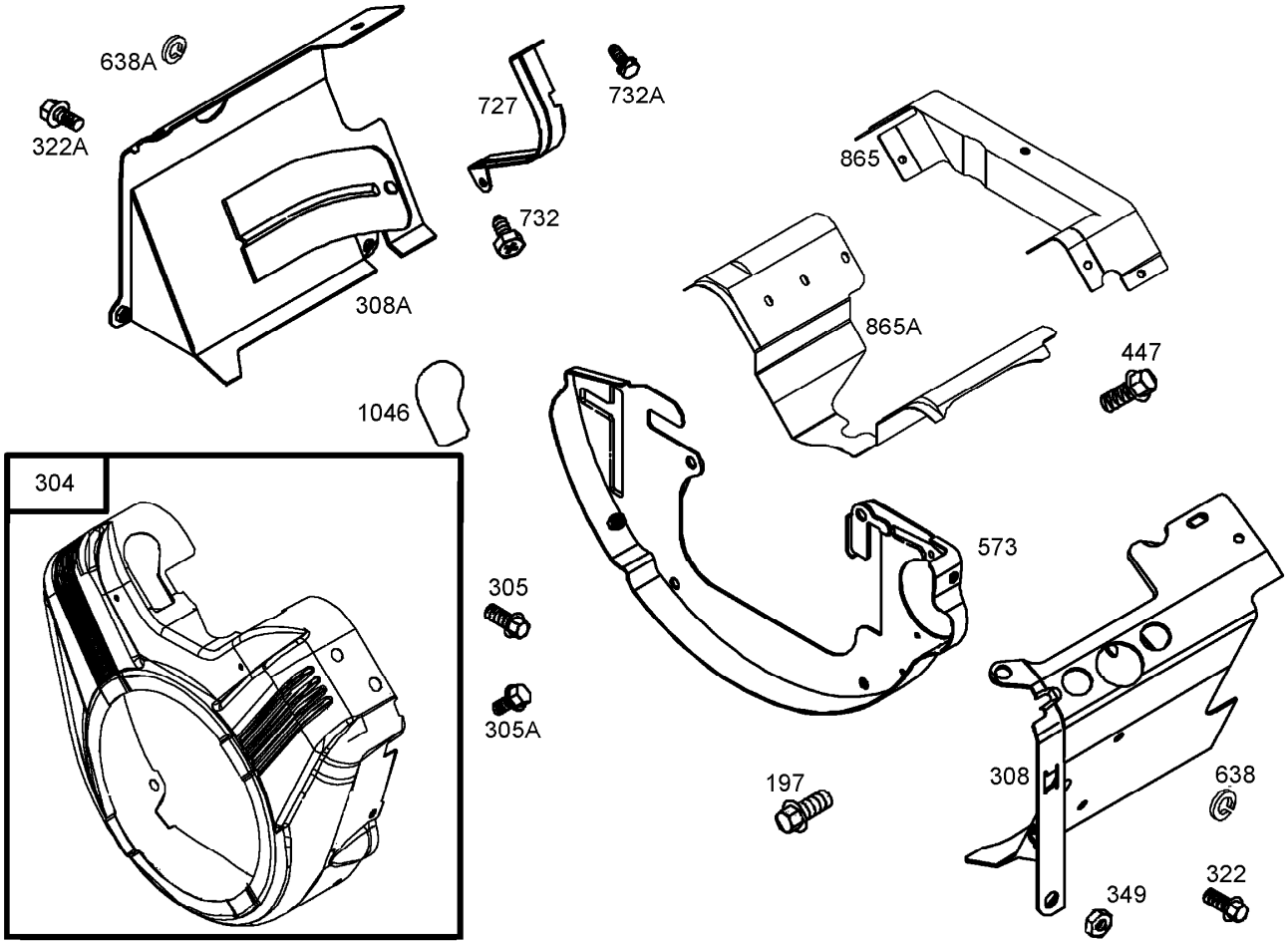

Blower Housing Assembly
Briggs and Stratton 356447-0179-E1

Ref.	*Part Number*	*Qty.*	*Description*
197	807163	1	Screw ●
304	841397	1	Housing blower ●
305	841233	1	Screw ●
305A	692056	1	Screw ●
308	841317	1	Cover-Head, Cylinder (Cylinder 1) ●
308A	841316	1	Cover-Head, Cylinder (Cylinder 2) ●
322	841233	1	Screw ●
322A	692067	1	Screw ●
349	690238	1	Nut ●
447	841233	1	Screw ●
573	841310	1	Plate back ●
638	690706	1	Washer ●
638A	691551	1	Washer ●
727	841313	1	Cover drive, Starter ●
732	690688	1	Screw ●
732A	841233	1	Screw ●
865	841319	1	Cover-Guide, Air ●
865A	807119	1	Cover-Guide, Air ●
1046	692082	1	Plug-Housing, Blower ●

● Obtain parts from www.briggsandstratton.com

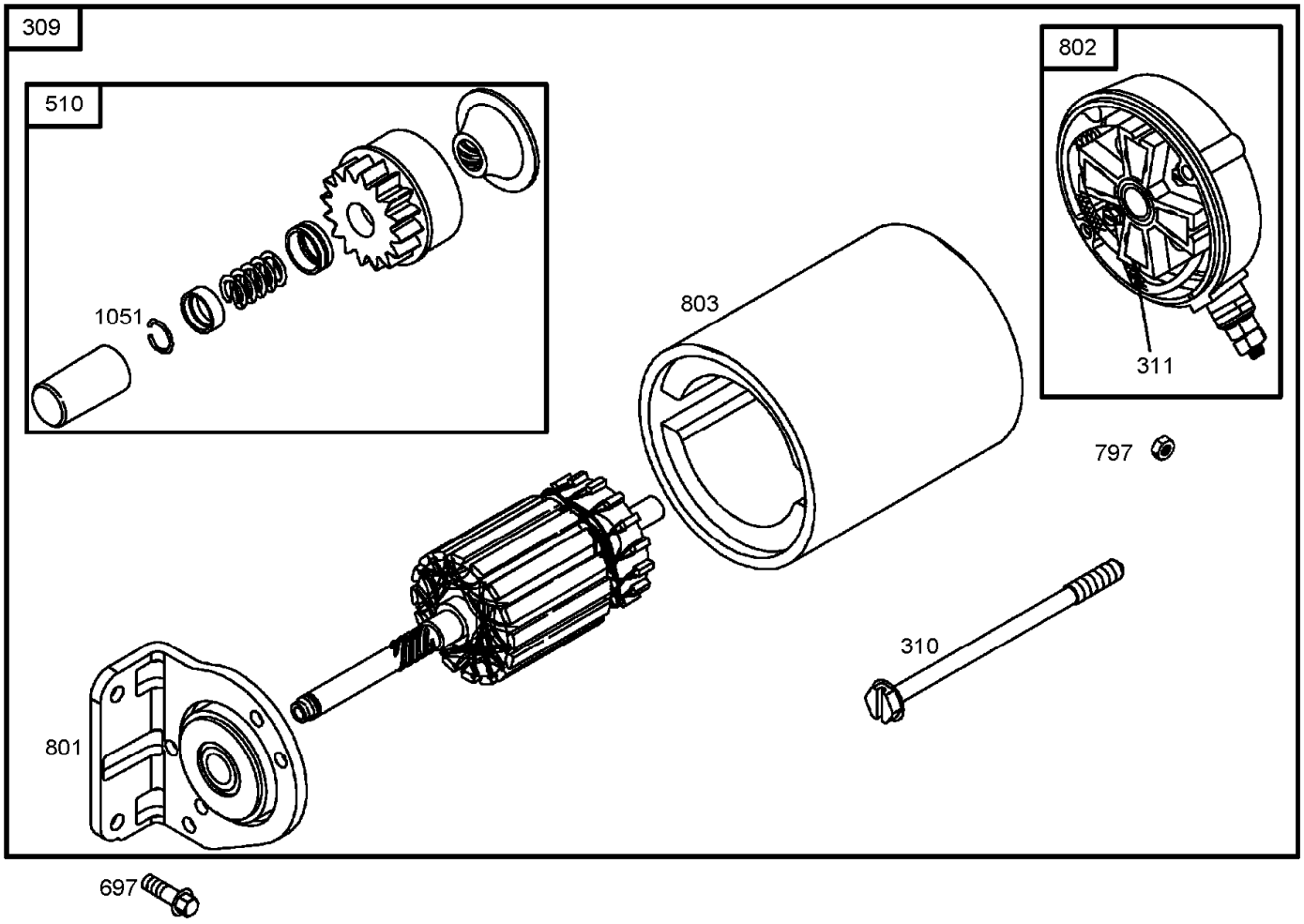

Starter Assembly
Briggs and Stratton 356447-0179-E1

Ref.	*Part Number*	*Qty.*	*Description*
309	691564	1	Motor-Starter ●
310	496880	1	Bolt-Thru ●
311	496887	1	Brush Set ●
510	496881	1	Drive-Starter ●
697	692062	1	Screw ●
797	691029	1	Nut ●
801	808778	1	Cap-Drive ●
802	496813	1	Cap-End ●
803	690854	1	Housing-Starter ●
1051	691124	1	Ring-Lock ●

● Obtain parts from www.briggsandstratton.com

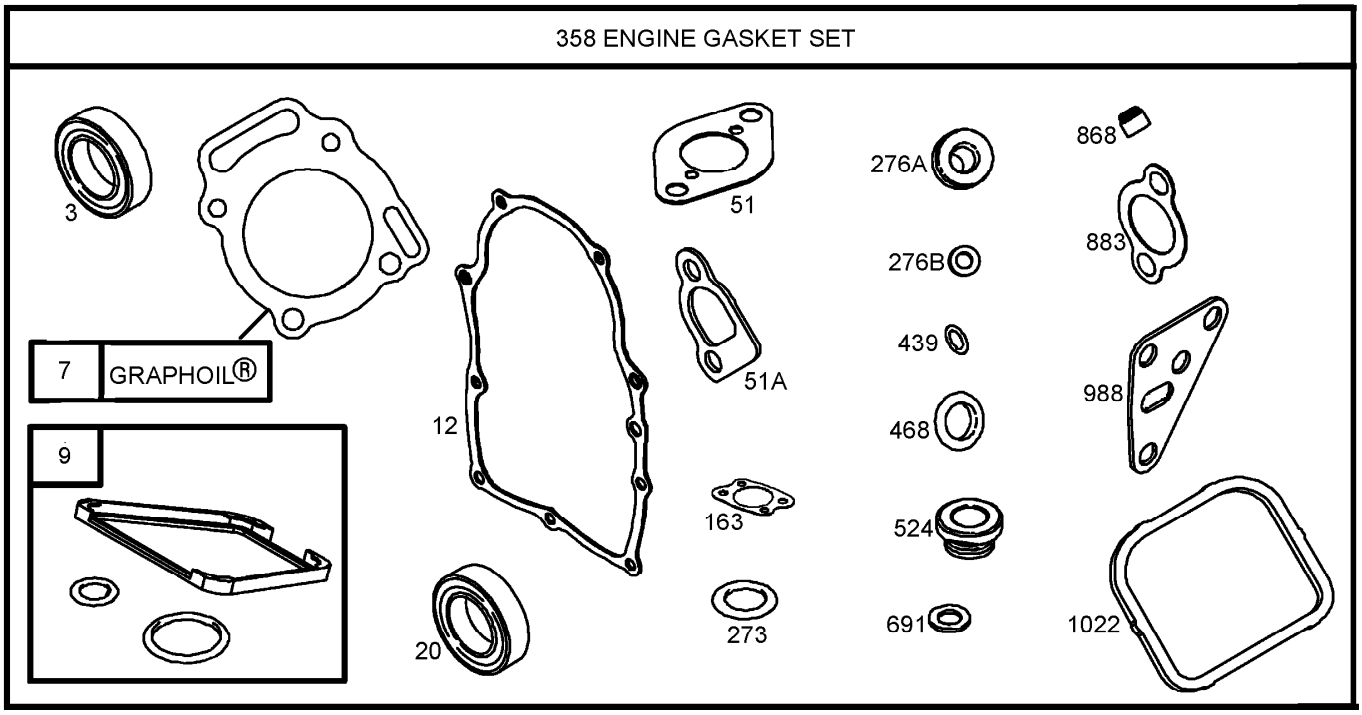

358 Engine Gasket Set
Briggs and Stratton 356447-0179-E1

Ref.	*Part Number*	*Qty.*	*Description*
3	805101	1	Seal-Oil ●
7	690888	1	Gasket-Head, Cylinder ●■
9	809094	1	Gasket-Breather ●
12	842589	1	Gasket-Crankcase ●
20	805049	1	Seal-Oil ●
51	691694	1	Gasket-Intake ●
51A	692035	1	Gasket-Intake ●■
163	692081	1	Gasket-Cleaner, Air ●
273	690681	1	Seal-O Ring ●
276A	807085	1	Washer-Sealing ●
276B	806137	1	Washer-Sealing ●
358	841188	1	Engine Gasket Set ●
439	692154	1	Seal-O Ring ●
468	690690	1	Seal-O Ring ●
524	693172	1	Seal-Tube, Dipstick ●
691	690680	1	Seal-Shaft, Governor ●
868	691963	1	Seal-Valve ●■
883	691613	1	Gasket-Exhaust ●■
988	692063	1	Gasket-Adapter, Oil Filter ●
1022	806039	1	Gasket-Cover, Rocker ●■

● Obtain parts from www.briggsandstratton.com

■ Included in Valve Gasket Set (Ref. No. 1095)

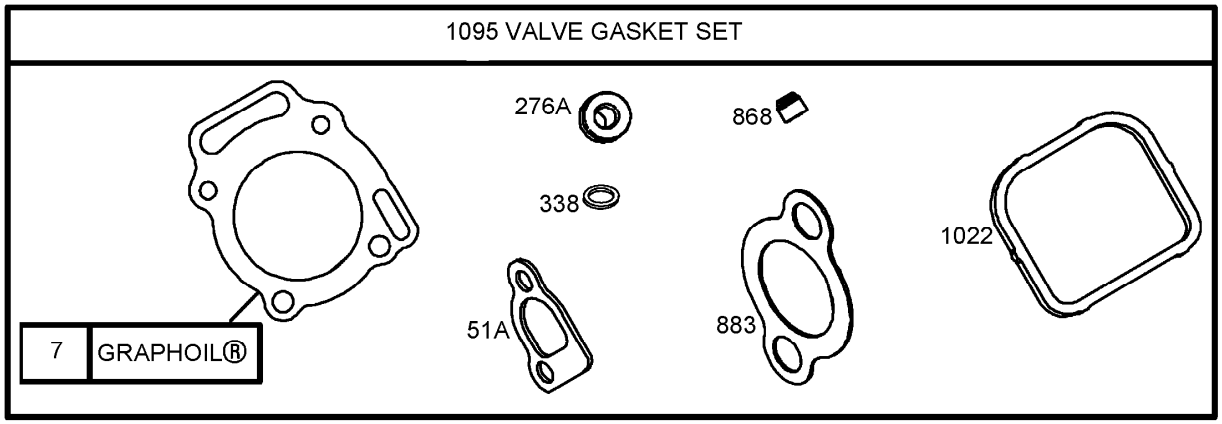

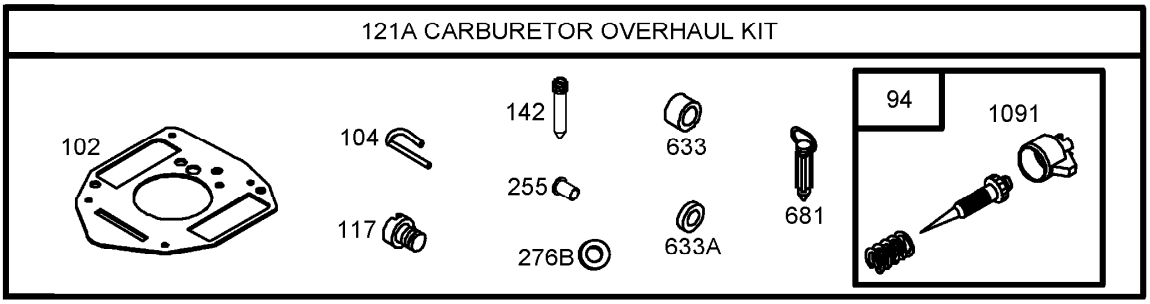

1095 Valve Gasket Set and 121A Carburetor Overhaul Kit Briggs and Stratton 356447-0179-E1

Ref.	*Part Number*	*Qty.*	*Description*
7	690888	1	Gasket-Head, Cylinder ● ■
51A	692035	1	Gasket-Intake ● ■
94	808399	1	Idle Mixture Kit ●
102	692077	1	Gasket-Body, Carburetor ●
104	690723	1	Pin-Hinge, Float ●
117	806126	1	Jet-Main ●
121A	809024	1	Carburetor Overhaul Kit ●
142	806128	1	Nozzle-Carburetor ●
255	690721	1	Bushing-Shaft, Choke ●
276A	807085	1	Washer-Sealing ● ■
276B	806137	1	Washer-Sealing ● ■
338	691312	1	Seal-O Ring ● ■
633	806131	1	Seal-Shaft, Choke Throttle ●
633A	690722	1	Seal-Shaft, Choke Throttle ●
681	808798	1	Valve-Needle, Float ●
868	691963	1	Seal-Valve ● ■
883	691613	1	Gasket-Exhaust ● ■
1022	806039	1	Gasket-Cover, Rocker ● ■
1091	691516	1	Cap-Limiter ●
1095	841191	1	Valve Gasket Set ●

● Obtain parts from www.briggsandstratton.com

■ Included in Engine Gasket Set (Ref. No. 358)

Attachments and Accessories

For 08705 Sand Pro/Infield Pro 5040 Traction Unit

Product Name	Model/Part
Front Lift Frame	08712
Manual Blade	08714
Midmount Toolbar System	08731
Tooth Rake	08751
Spring Rake	08752
Rear Broom	08753
Finish Grader	08754
Spiker	08755
Drag Mat Carrier System	08756
Debris Blower	08759
QAS Utility Box	08760
QAS Nail Drag	08761
QAS Bunker Pump	08765
Rear Remote Hydraulic Kit	08781
Front Remote Hydraulics	08782
Screen-Spark Arrestor	104-6540
Yellow Hydraulic Cap	107-1576
Red Gas Cap	107-2173
Light Kit	110-1314
Speed Limiter Kit	110-1371
Draw Bar Hitch Assembly	110-1375
Smooth Wheel and Tire ASM	112-0034
Drag Mat Assembly	112-1424
Variable Orifice Kit	112-1433
MVP Filter Kit	30035
Wheel and Tire Assembly	94-6126

Notes:

Notes:

TORO®

Count on it.