Form No. 3364-943 Rev B

TORO®

Count on it.

Parts Catalog

Sand Pro® 5040 Traction Unit

Model No. 08705—Serial No. 310000301 and Up

Register at www.Toro.com.
Original Instructions (EN)

CE

3364-943 B

Ordering Replacement Parts

To order replacement parts, please supply the part number, the quantity, and the description of each part desired.

Understanding Reference Numbers

Each identified part in an illustration has a reference number. The reference number for a part also appears in the parts list, along with other information about the part.

This catalog uses two special reference number formats, one to indicate parts in a service assembly and another to indicate the quantity of a given part in an illustration.

Service Assembly Reference Numbers

Parts in service assemblies have reference numbers in the form a:b. The a represents the reference number of the entire service assembly and the b represents a sequential number unique to each part within the service assembly.

For example, a wheel assembly might be identified by reference number 6, the tire by 6:1, the valve by 6:2, and the wheel by 6:3. When you order the assembly identified by reference number 6, you receive all parts identified by reference numbers 6:1,6:2, and 6:3. However, you may also order any part individually. Reference numbers of this type appear in illustration and in parts lists.

Reference Numbers Indicating Quantity

In an illustration, if a reference number indicates more than one part, the reference number has the form nX y. The n represents the quantity of the part, the X is the multiplication symbol, and the y represents the reference number.

For example, in an illustration, the reference number 2X 37 means that two of the parts identified by reference number 37 are indicated.

List of Abbreviations

AR: as required

ASM: assembly

BBC: blade brake control

BHTF: button head thread forming

CARR: carriage

CCW: counter clockwise

CW: clockwise

DEG: degrees

DPA: Dual Point Adjustment

ECM: electronic control module

EXT: external

FH: flat head

GA: gauge

HD: heavy-duty

HF: hex flange

HH: hex head

HHF: hex head flange

HHFTF: hex head flange thread forming

HJ: hex jam

HLH: hex lag head

HOC: height-of-cut

HSBH: hex socket button head

HSFH: hex socket flat head

HSH: hex socket head

HWH: hex washer head

HWHTF: hex washer head thread forming

HYD: hydraulic

LH: left hand

LPG: Liquid Propane Gas

NI: nylon insert

NPTF: national pipe thread fine

PFH: phillips flat head

PPH: phillips pan head

PPHTF: phillips pan head thread forming

PRH: phillips round head

PTH: phillips truss head

PTO: power-take-off

RH: right hand

ROPS: roll-over protection system

RRB: rear roller brush

SFH: slotted fillister head

SHH: slotted hex head

SHWH: slotted hex washer head

SPH: slotted pan head

SQH: square head

SRH: slotted round head

STD: standard

TAP: self tapping

TTH: torx truss head

Contents

Frame and Console Assembly 4
Steering Assembly 5
Steering Valve Assembly No. 108-2924 6
Hydraulic Cylinder Assembly No. 114-0620 7
Fuel Tank and Battery Assembly 8
Front Wheel Assembly 10
Hydraulic Motor Assembly No. 108-2948 12
Rear Wheel Assembly 13
Hydraulic Motor Assembly No. 108-2949 14
Hydraulic Motor Assembly No. 108-2947 15
Traction Pedal Assembly 16
Pump Control Lever Assembly 17
Engine Installation Assembly 18
Pump and Coupling Assembly 19
Variable Piston Pump Assembly No. 114-0612 20
Hydraulic Tank, Filter and Cooler Assembly 22
Lift Valve and Rear Tube Assembly 23
Valve Assembly No. 43-1710 24
Seat and Shroud Assembly 25
Wire Harness, Air Cleaner and Hose Assembly 26
Air Cleaner Assembly No. 93-2190 27
Rear Hitch Assembly 28
Hydraulic Lift Cylinder Assembly No. 115-5647 30
Attachments and Accessories 31

© 2012—The Toro® Company
8111 Lyndale Avenue South
Bloomington, MN 55420

Contact us at www.Toro.com.
Printed in the USA.
All Rights Reserved

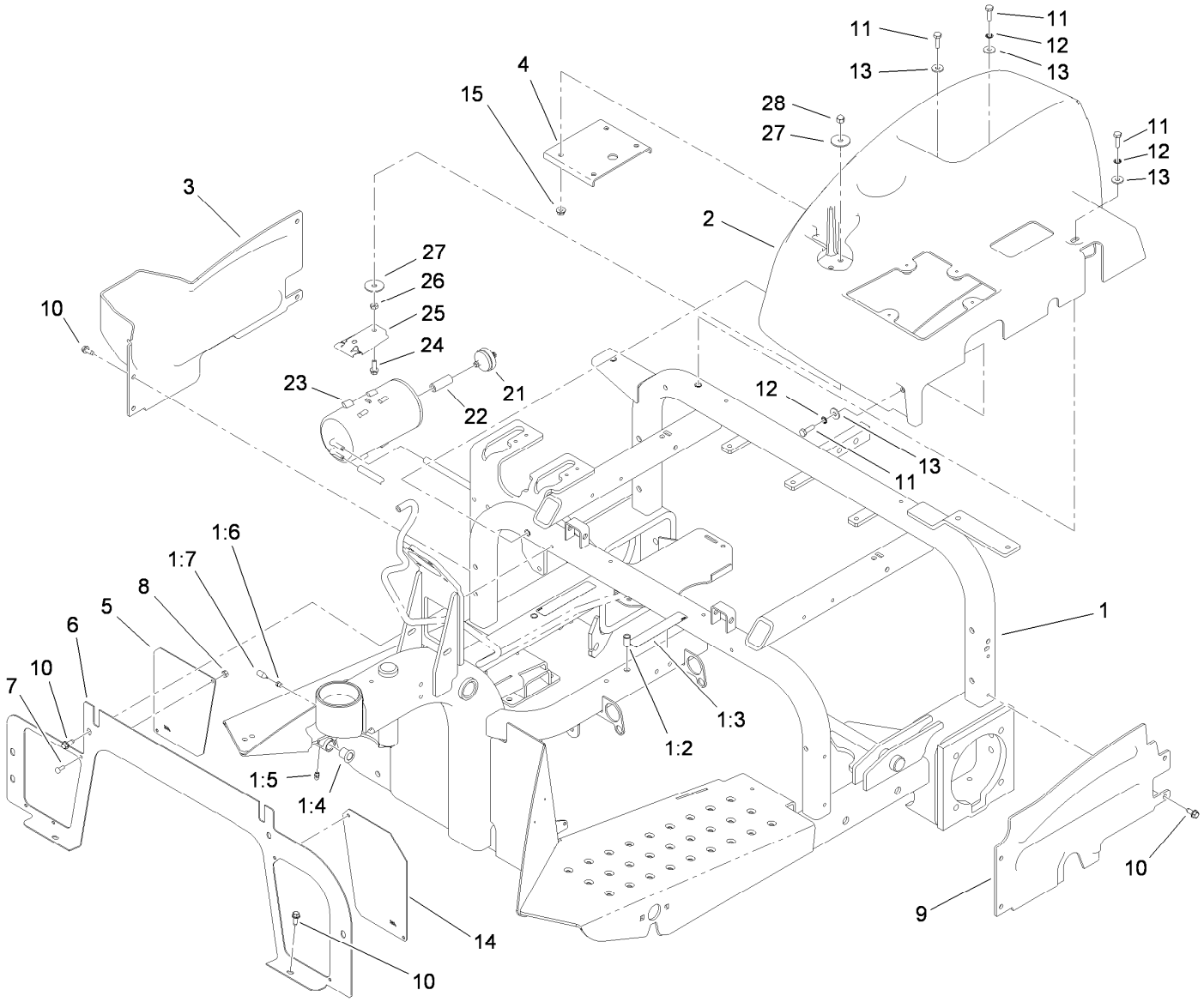

Frame and Console Assembly

Ref.	Part Number	Qty.	Description
1	110-3367	1	Frame ASM
1:2	32148-11	5	Insert-Threaded
1:3	93-7272	2	Decal-Warning
1:4	256-219	2	Bushing
1:5	302-58	1	Fitting-Straight
1:6	107-1997	1	Fitting-Grease
1:7	107-1998	1	Nozzle-Grease
2	108-2936	1	Console
3	108-6855	1	Shroud-Wheel, RH
4	108-7995-03	1	Plate-Support, Console
5	108-6854-01	1	Screen-Shroud
6	112-1443-01	1	Panel-Front
7	3290-321	4	Screw-HWH
8	3296-2	4	Nut-Lock, NI
9	108-6856	1	Shroud-Wheel, LH

Ref.	Part Number	Qty.	Description
10	32144-10	12	Screw-HWH
11	321-5	7	Screw-HH
12	3254-8	3	Washer-Lock
13	3256-78	7	Washer-Flat
14	108-7907-01	1	Screen-Panel, LH
15	32128-33	4	Nut-HF
21	115-7854	1	Filter-Fuel, Inline
22	106-5317	1	Hose-Fuel
23	115-2251	1	Canister-Carbon
24	3234-4	1	Screw-HHF
25	114-0292	1	Bracket-Canister, Carbon
26	3218-1	1	Nut-Jam
27	3256-57	2	Washer-Flat
28	32111-7	1	Nut-Cap

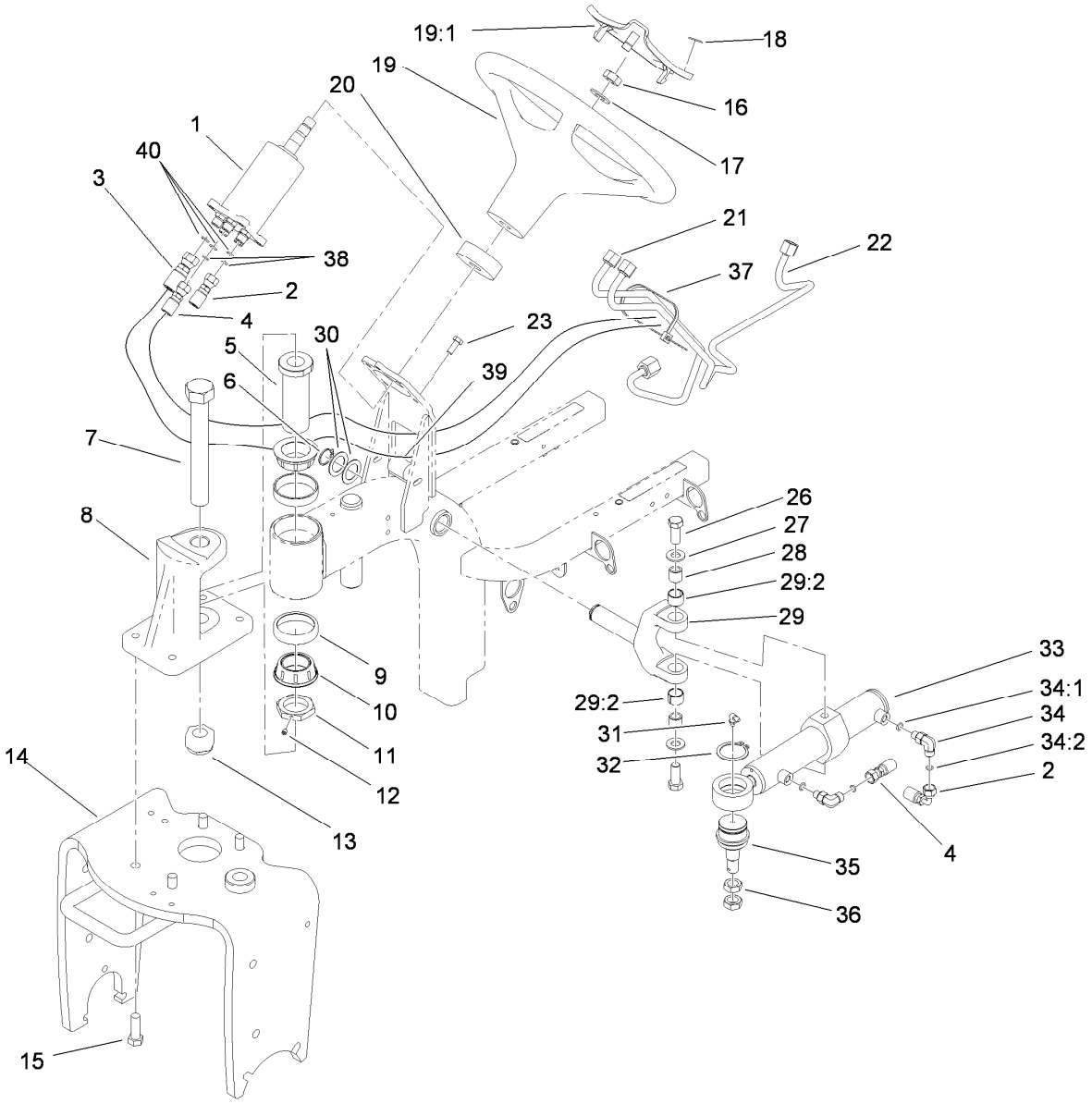

Steering Assembly

Ref.	Part Number	Qty.	Description
1	108-2924	1	Valve-Steering
2	105-4347	1	HYD Hose ASM
3	93-5385	1	Hose ASM
4	108-6508	1	HYD Hose ASM
5	108-8470	1	Sleeve-Steering
6	32151-36	1	Ring-Retaining
7	3216-16	1	Screw-HH
8	108-5431	1	Pivot-Steering
9	107-7590	2	Cup-Bearing
10	107-7589	2	Cone-Bearing (W/ Seal)
11	108-8471	1	Nut-Steering
12	3245-1	1	Screw-Set, HSH
13	104-2024	1	Nut-Hex, NI
14	108-0573-01	1	Castor Fork ASM
15	325-6	4	Screw-HH
16	3296-33	1	Nut-Lock, NI
17	3256-27	1	Washer-Flat
18	98-1459	1	Decal
19	98-1471	1	Wheel-Steering
19:1	98-1468	1	Cover-Wheel, Steering
20	108-7998	1	Collar-Foam

Ref.	Part Number	Qty.	Description
21	108-8414	1	Tube ASM
22	108-8415	1	Tube ASM
23	33114-020	4	Screw-HH
26	94-7976	2	Screw-HH
27	3256-26	2	Washer-Flat
28	108-8483	2	Spacer-Plain
29	108-8481	1	Yoke And Bushing ASM
29:2	108-8482	2	Bushing-Sleeve
30	1-543436	2	Washer-Spacer
31	302-40	1	Fitting-Grease
32	32151-104	1	Ring-Retaining, External
33	114-0620	1	Hydraulic Cylinder ASM
34	340-132	2	Fitting-HYD, 90 DEG
34:1	237-78	1	O-Ring
34:2	237-21	1	O-Ring
35	106-6774	1	Joint-Ball
36	3220-6	2	Nut-Jam
37	3290-379	1	Tie-Cable
38	237-21	2	O-Ring
39	38-3400	2	Guard-Rubber
40	237-22	3	O-Ring

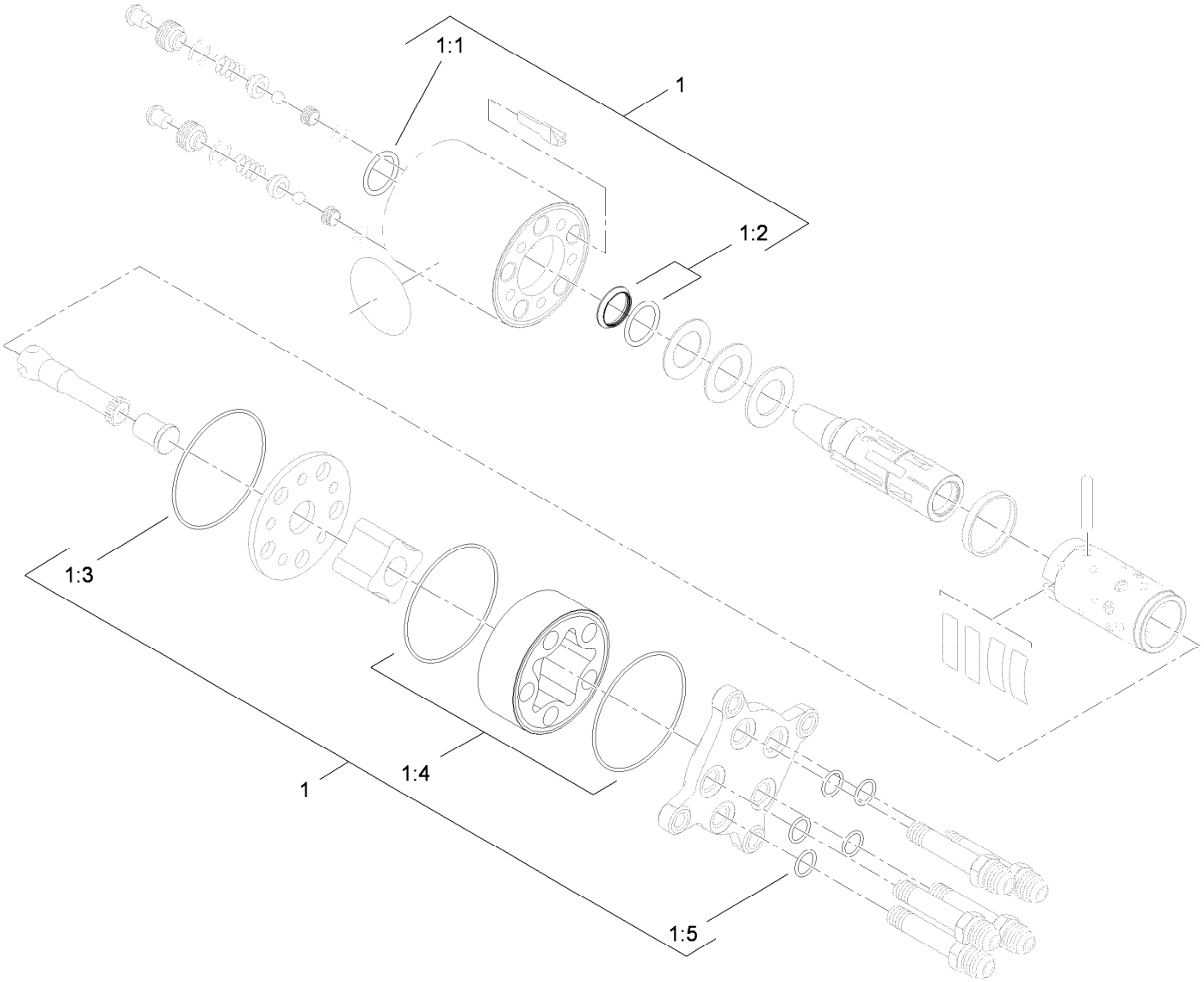

Steering Valve Assembly No. 108-2924

Ref.	*Part Number*	*Qty.*	*Description*
1	106-6716	1	Seal Kit
1:1		1	Ring-Seal, Dust ●
1:2		1	Seal-Shaft ●
1:3		1	Ring-Retaining ●
1:4		2	Ring-Retaining ●
1:5		5	Ring-Retaining ●

● Not serviced separately

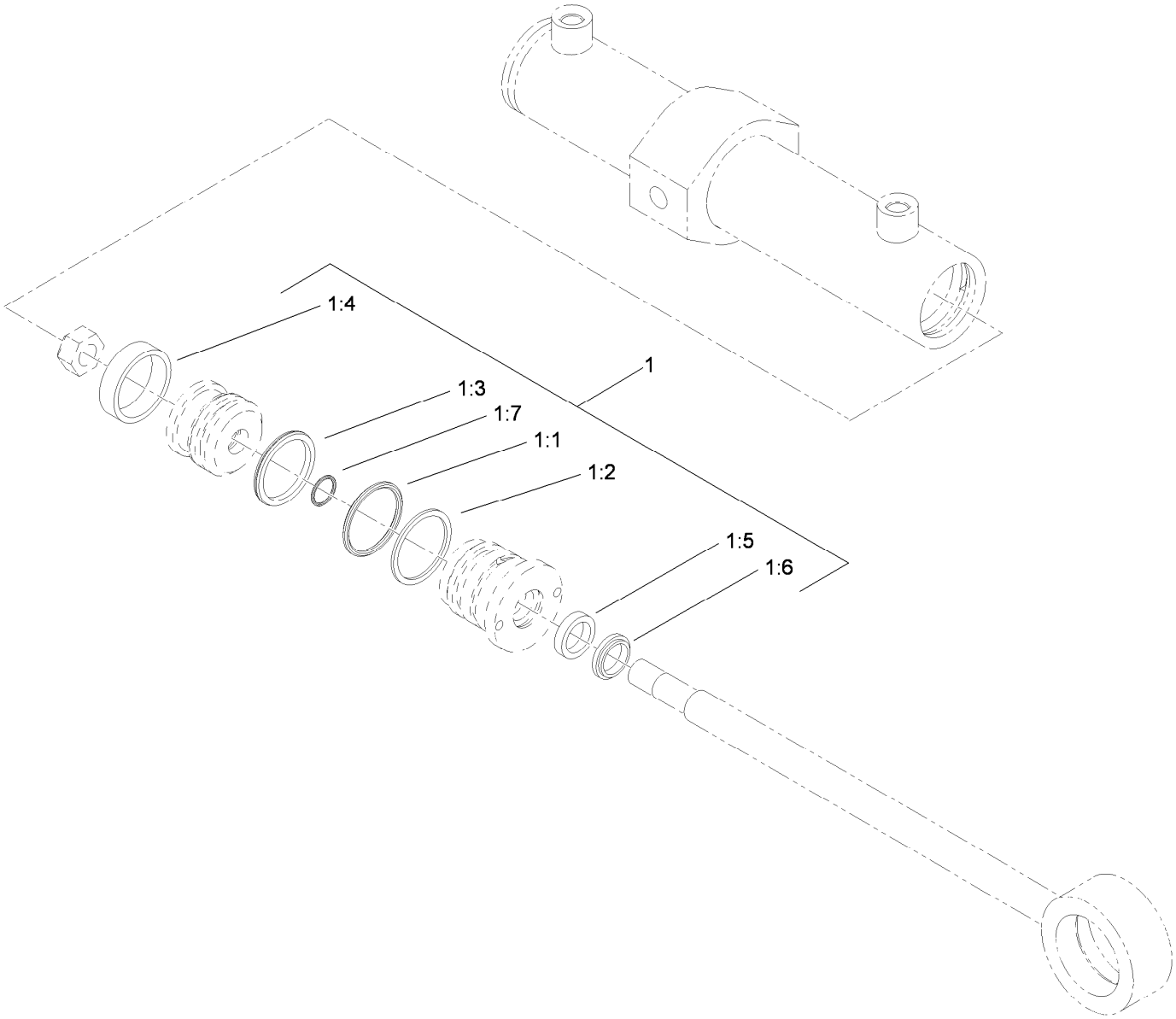

Hydraulic Cylinder Assembly No. 114-0620

Ref.	*Part Number*	*Qty.*	*Description*
1	114-0622	1	Seal Kit
1:1		1	Ring-Retaining ●
1:2		1	Backup ●
1:3		1	Bp Seal ●
1:4		1	Wear Ring ●
1:5		1	Bs Seal ●
1:6		1	Dust Seal ●
1:7		1	Ring-Retaining ●

● Not serviced separately

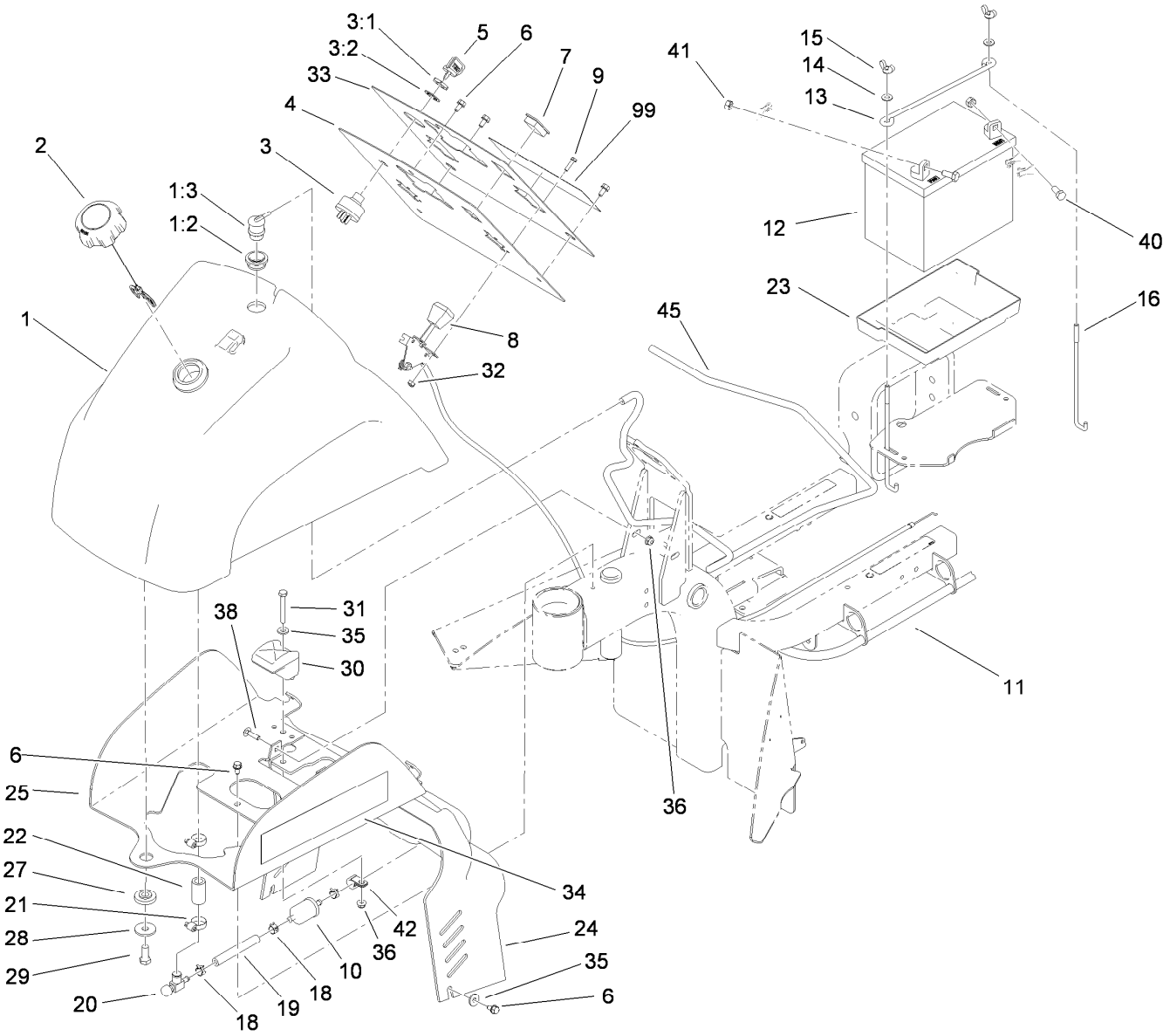

Fuel Tank and Battery Assembly

Ref.	Part Number	Qty.	Description
1	119-2496	1	Fuel Tank ASM
1:2	114-0284	1	Grommet
1:3	114-0285	1	Valve-Rollover
2	115-7788	1	Cap-Fuel
3	83-0020	1	Switch-Ignition
3:1	218-461	1	Nut-HH
3:2	3254-5	1	Washer-Tooth, Internal
4	108-6896-03	1	Panel-Dash
5	63-8360	2	Key-Ignition (W/Shield)
6	32144-10	6	Screw-HWH
7	99-7420	1	Plug-Hole
8	108-7946	2	Cable ASM
9	3290-321	4	Screw-HWH
10	94-2690	1	Filter-Fuel
11	110-3372	1	Hose-Fuel
12	104-8162	1	Battery
13	100-6434	1	Rod-Hold Down, Battery
14	3256-22	2	Washer-Flat
15	32103-22	2	Nut-Wing
16	100-6435	2	Post-Battery
18	2412-98	4	Clamp-Hose

Ref.	Part Number	Qty.	Description
19	109-0660	1	Hose-Fuel
20	83-1390	1	Valve-Shut-Off, Fuel
21	2412-36	2	Clamp-Hose
22	110-3371	1	Hose-Fuel
23	106948	1	Tray-Battery
24	108-6898	1	Shroud-Dash
25	108-6895-01	1	Bracket-Mount, Tank
27	240-11	1	Bushing-Flange
28	63-8410	1	Washer
29	323-5	1	Screw-HH
30	107-4543	2	Clamp
31	321-18	2	Screw-HH
32	3296-2	4	Nut-Lock, NI
33	119-2483	1	Decal-Dash
34	108-8419	2	Decal
35	3256-78	4	Washer-Flat
36	104-7201	4	Nut-HF
38	3229-1	2	Bolt-CARR
40	322-3	2	Screw-HH
41	3217-6	2	Nut-Hex
42	92-6064	1	Clamp-R

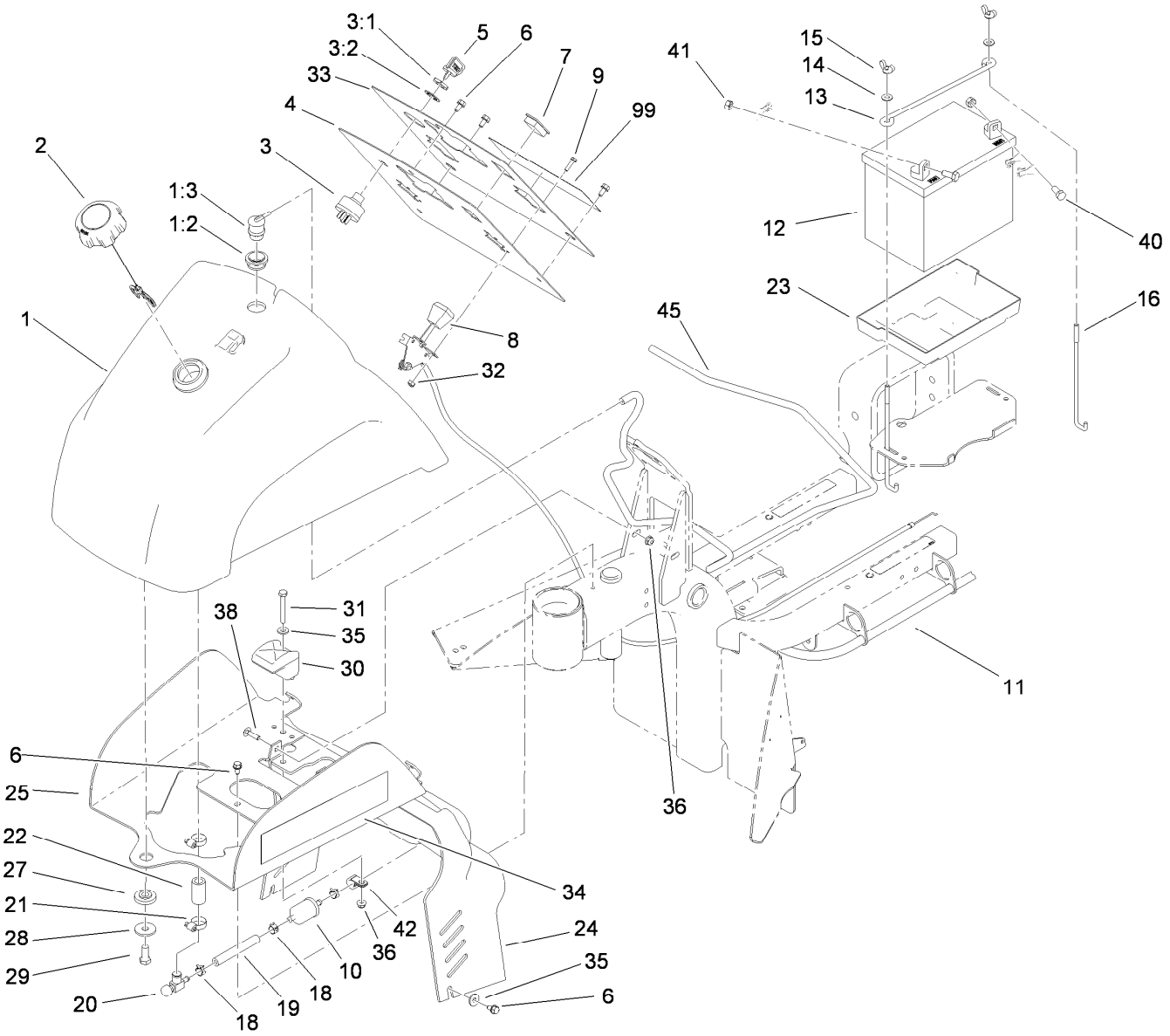

Fuel Tank and Battery Assembly (continued)

Ref.	*Part Number*	*Qty.*	*Description*
45	117-9568	1	Hose-Vent, Tank
99	119-2484	1	Decal-Dash, Ce

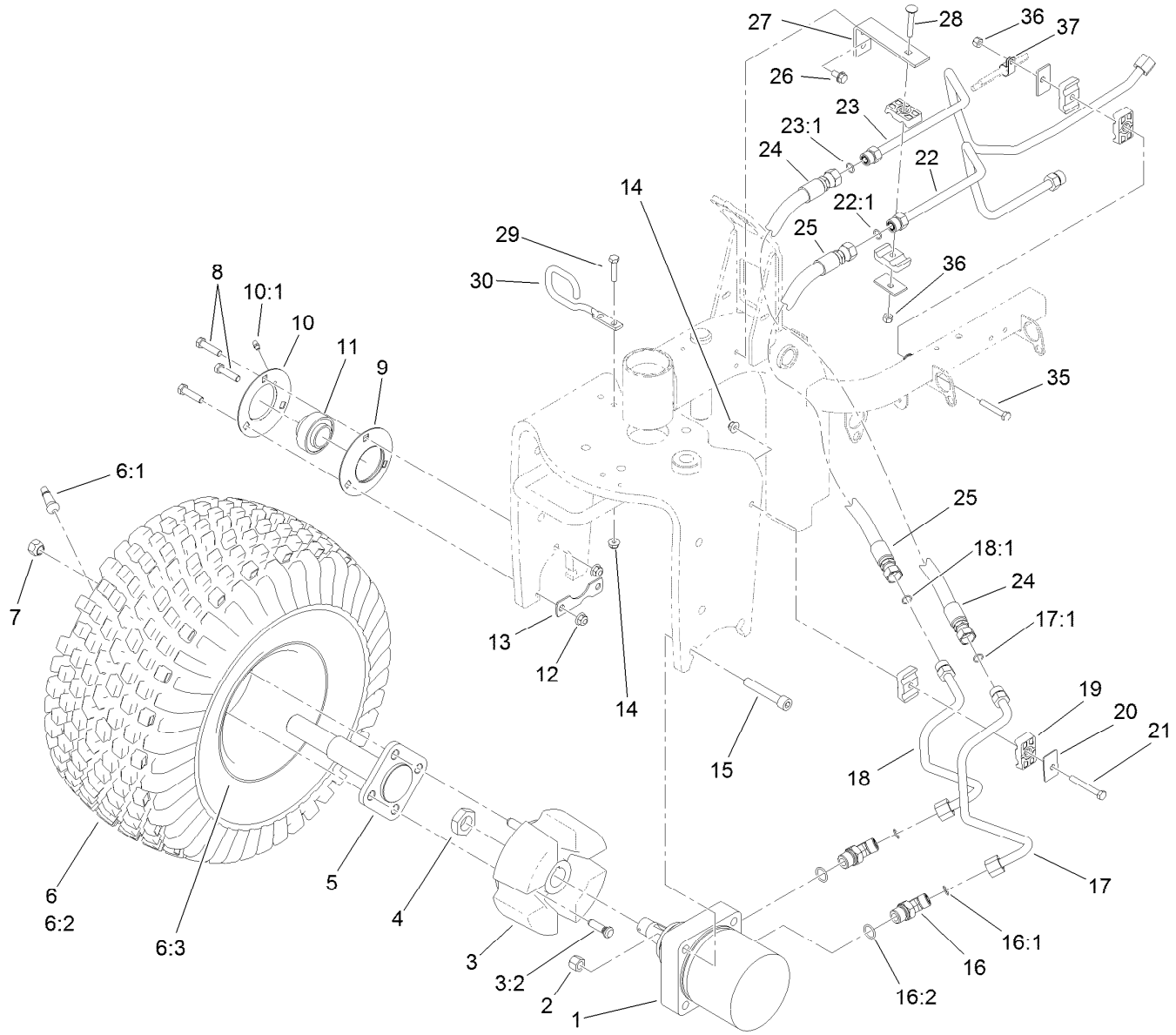

Front Wheel Assembly

Ref.	Part Number	Qty.	Description
1	108-2948	1	HYD Motor ASM (CW)
2	3296-23	2	Nut-Lock, NI
3	110-6310	1	Front Wheel Hub ASM
3:2	10-6830	4	Stud-Type, Drive
4	26-3790	1	Nut-Lock
5	110-6314	1	Spindle
6	95-0621	1	Wheel And Tire ASM
6:1	5108	1	Valve
6:2	85-8290	1	Tire-2Ply, Knobby
6:3	94-6116	1	Wheel-Rear
7	242-50	4	Nut-Lug
8	323-8	3	Screw-HH
9	85-8950	1	Flangette-Standard
10	85-8940	1	Flangette-Relube
10:1	302-5	1	Fitting-Grease
11	251-352	1	Bearing
12	104-8301	3	Nut-Flange, NI
13	88-8350	1	Tab-Bearing
14	104-8300	3	Nut-Flange, NI
15	3274-74	2	Screw-HSH
16	340-89	2	Fitting-HYD, 45 DEG

Ref.	Part Number	Qty.	Description
16:1	237-30	1	O-Ring
16:2	237-80	1	O-Ring
17	108-8432	1	Tube ASM
17:1	237-30	1	O-Ring
18	108-8431	1	Tube ASM
18:1	237-30	1	O-Ring
19	56-7976	6	Clamp-Tube
20	69-9760	3	Coverplate
21	322-12	1	Screw-HH
22	108-8411	1	Tube ASM
22:1	237-30	2	O-Ring
23	108-8409	1	Tube ASM
23:1	237-30	1	O-Ring
24	108-8433	1	HYD Hose ASM
25	110-6303	1	HYD Hose ASM
26	32144-14	2	Screw-HWHTF
27	108-8455-01	1	Bracket-Clamp
28	3230-6	1	Screw-CARR
29	322-7	2	Screw-HH
30	108-8435	1	Guide-Hose
35	322-10	1	Screw-HH

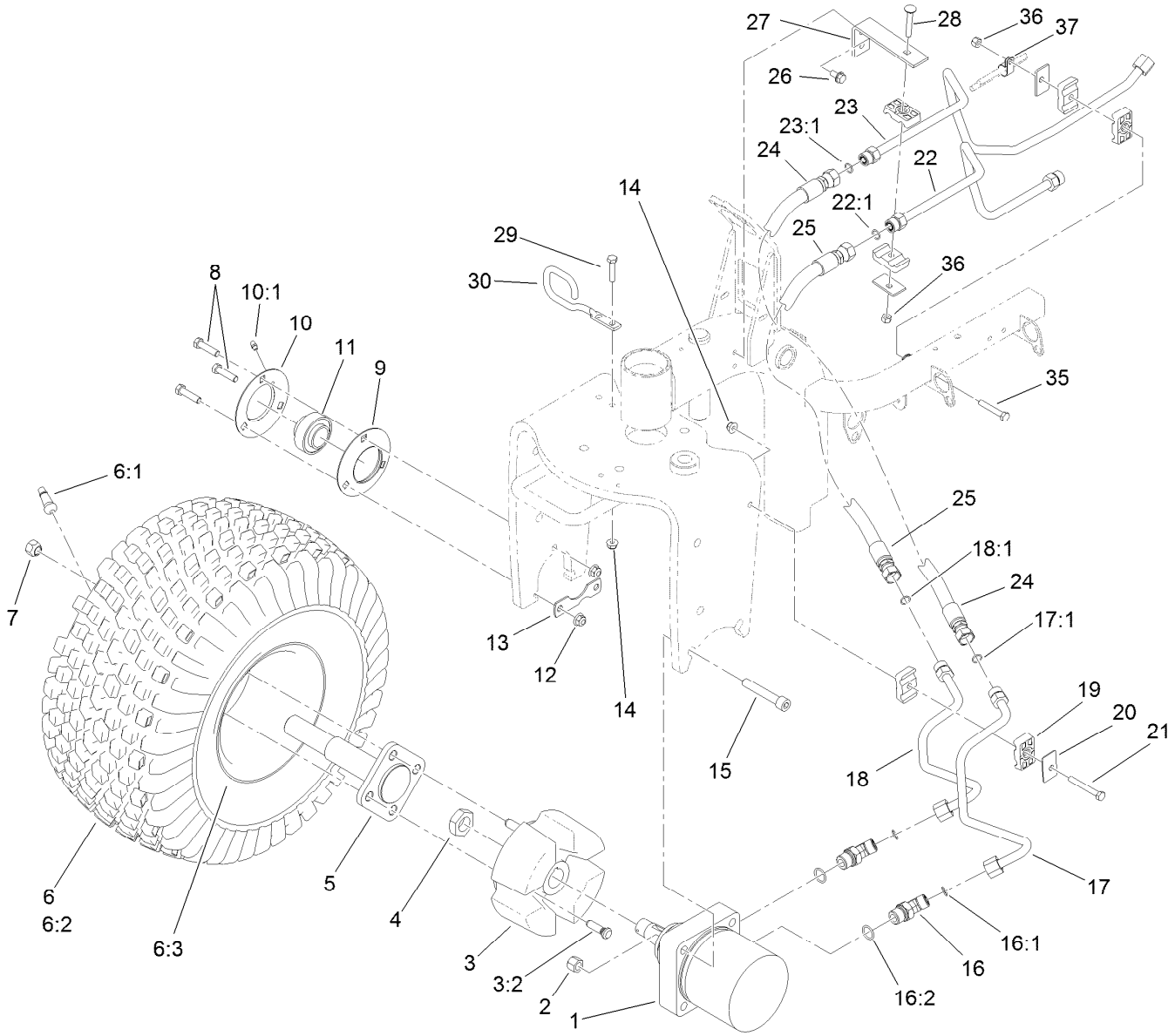

Front Wheel Assembly (continued)

Ref.	Part Number	Qty.	Description
36	3296-29	2	Nut-Lock, NI
37	2412-41	1	Clamp

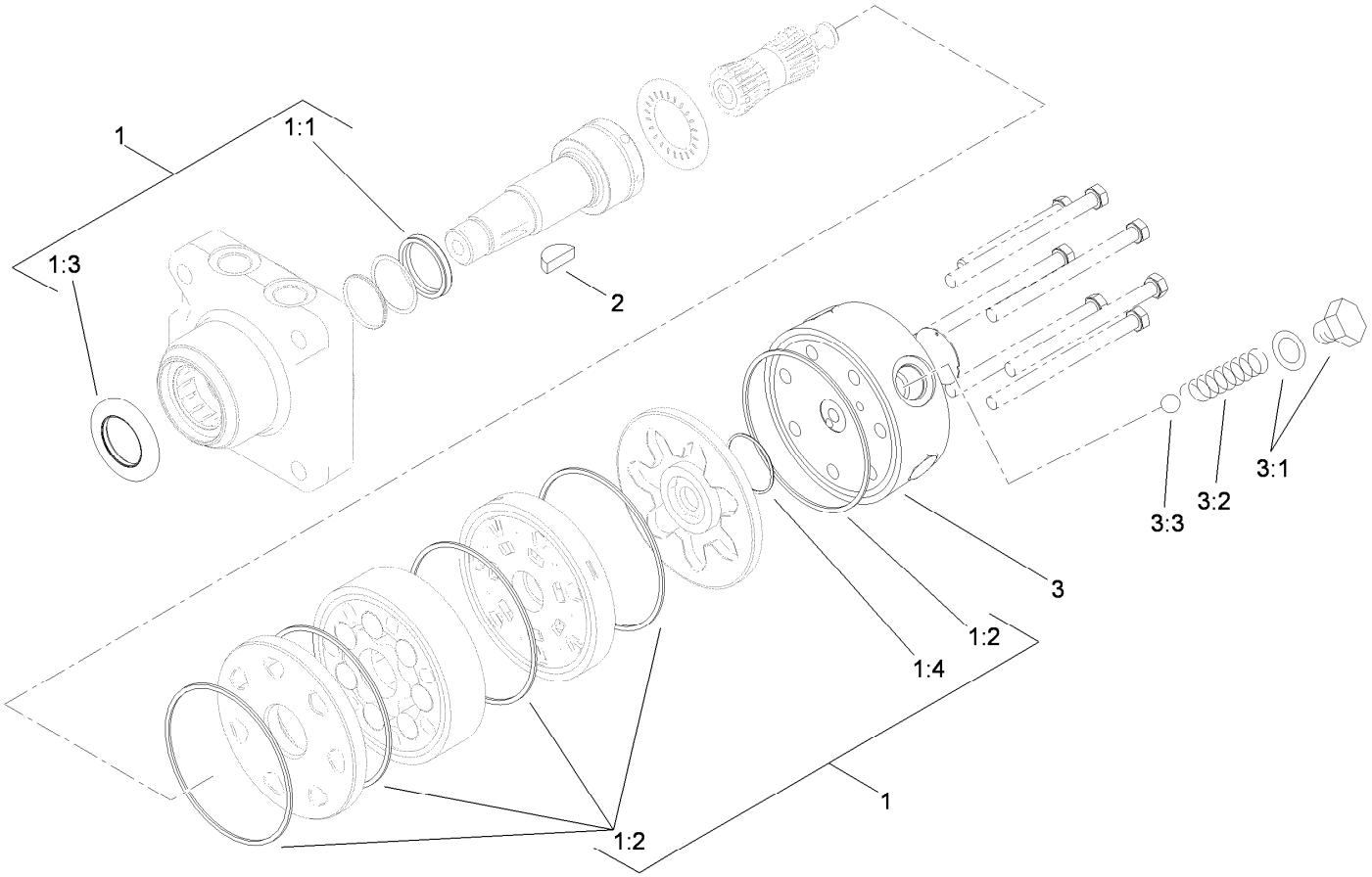

Hydraulic Motor Assembly No. 108-2948

Ref.	*Part Number*	*Qty.*	*Description*
1	110-6459	1	Seal Kit
1:1		1	Seal-Shaft ●
1:2		5	Seal-Body ●
1:3		1	Seal-Dirt / Water ●
1:4		1	Seal-Commutator ●
2	3257-42	1	Key-Woodruff
3	99-3538	1	End Cover ASM
3:1		1	Spring Cap And O-Ring ASM ●
3:2	99-3541	1	Spring
3:3	99-3540	1	Ball

● Not serviced separately

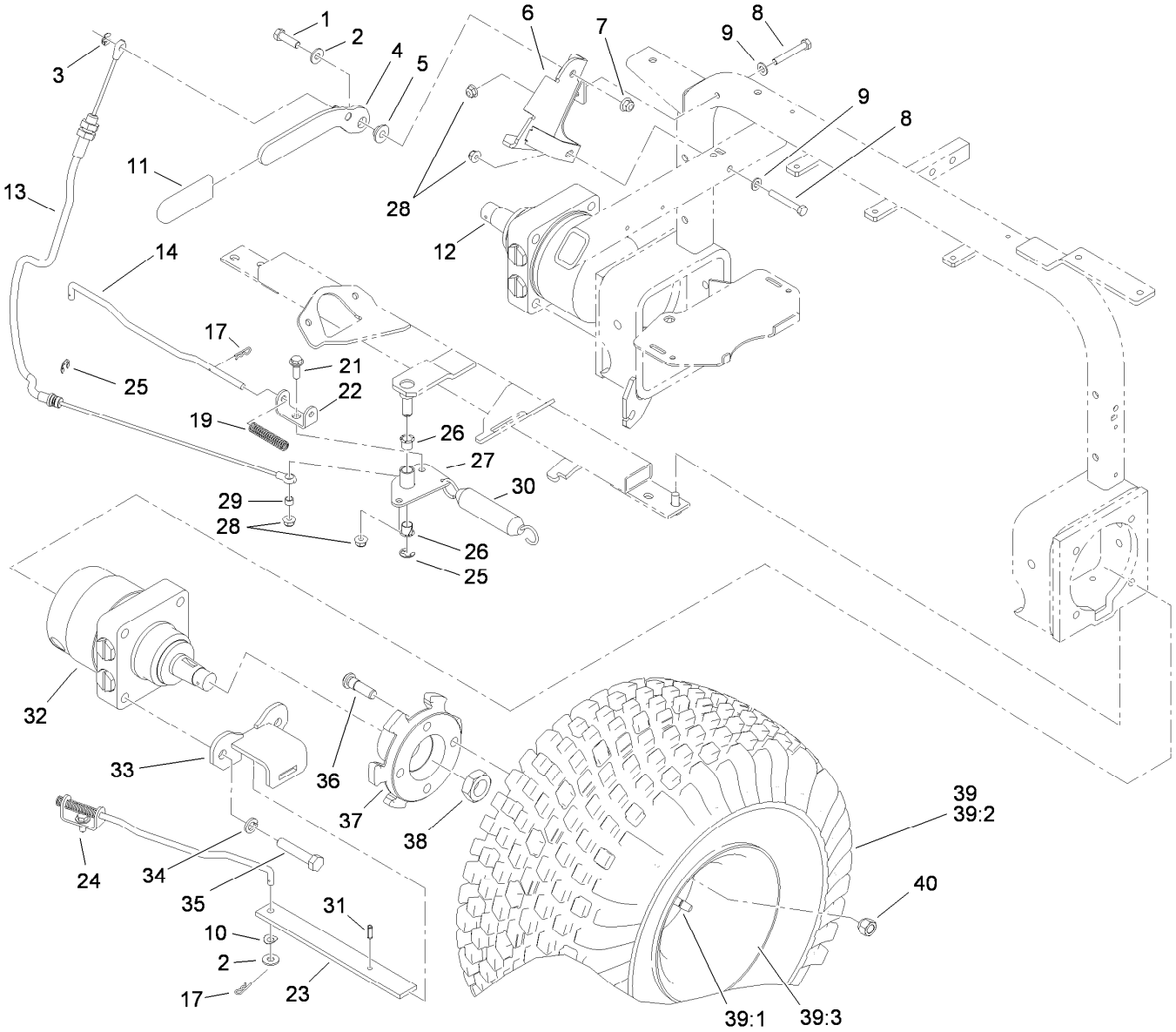

Rear Wheel Assembly

Ref.	Part Number	Qty.	Description
1	323-7	1	Screw-HH
2	3256-3	3	Washer-Flat
3	32151-47	1	Ring-Retaining
4	108-7991-03	1	Brake Lever ASM
5	108-7994	1	Bushing-Pivot, Lever
6	108-7988-03	1	Brake Lever Bracket ASM
7	104-8301	1	Nut-Flange, NI
8	322-11	2	Screw-HH
9	3256-23	2	Washer-Flat
10	3290-301	2	Washer-Spring
11	21-1880	1	Grip-Handle
12	108-2949	1	HYD Motor ASM (CW)
13	108-7913	1	Cable-Brake, Park
14	108-7987	2	Link-Latch, Parking
17	3290-307	4	Pin-Hair
19	107-3376	2	Spring-Compression
21	19-1471	1	Screw-Shoulder
22	114-0631	2	Clevis-Latch, Parking
23	108-7986-03	2	Bar-Brake
24	19-1470	1	Screw-Shoulder

Ref.	Part Number	Qty.	Description
25	32120-47	2	Ring-Retaining, External
26	256-257	2	Bushing-Nyliner
27	108-7979-03	1	Bellcrank ASM
28	104-8300	4	Nut-Flange, NI
29	108-7983	1	Bushing-Cable
30	66-4270	1	Spring-Extension
31	32121-11	2	Pin-Roll
32	108-2947	1	HYD Motor ASM (CCW)
33	108-7973-03	2	Brake Bracket ASM
34	3253-7	8	Washer-Lock
35	325-10	8	Screw-HH
36	85-6540	8	Stud-Drive
37	108-7977-03	2	Hub-Wheel
38	26-3790	2	Nut-Lock
39	95-0621	2	Wheel And Tire ASM
39:1	5108	1	Valve
39:2	85-8290	1	Tire-2Ply, Knobby
39:3	94-6116	1	Wheel-Rear
40	242-50	8	Nut-Lug

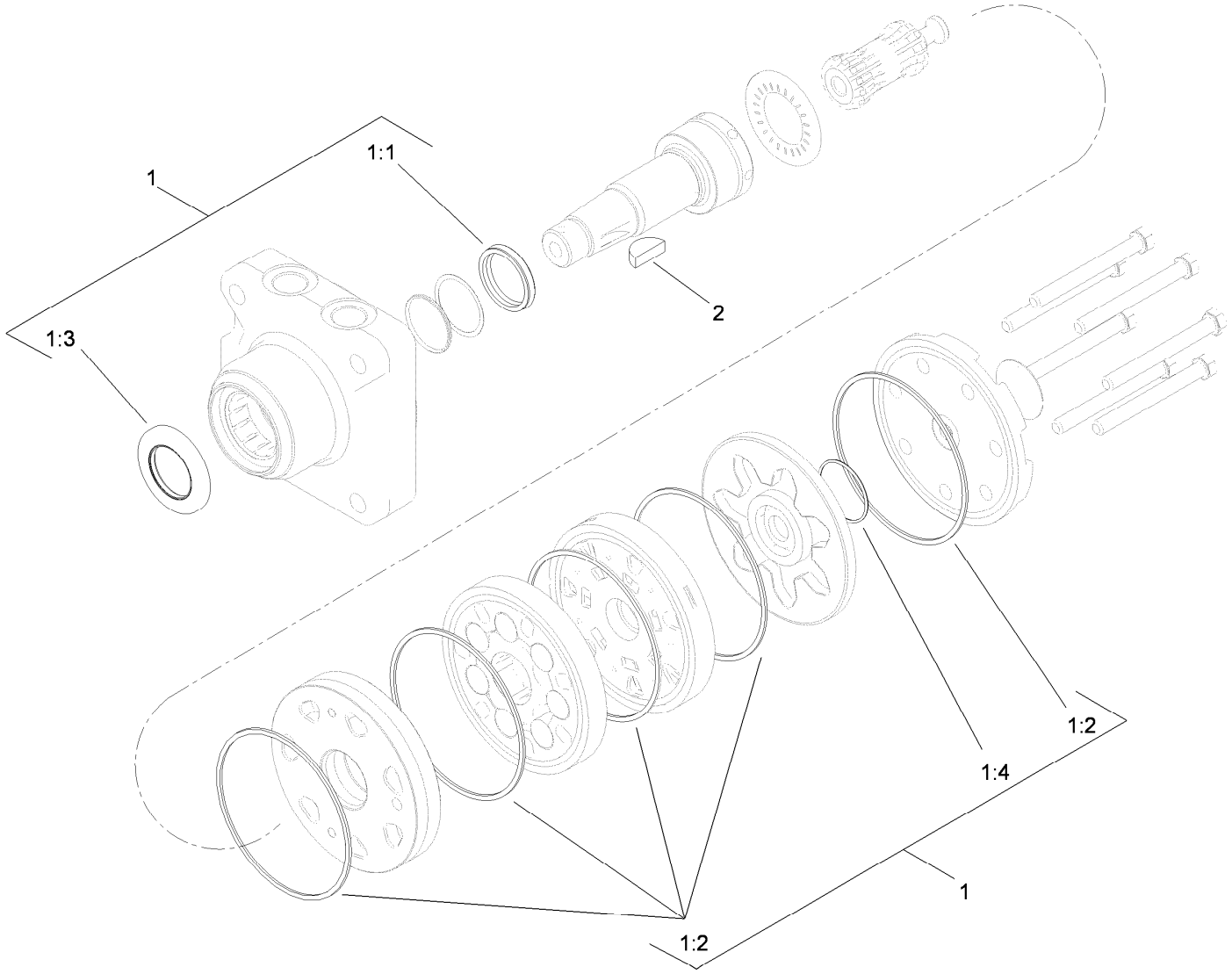

Hydraulic Motor Assembly No. 108-2949

Ref.	*Part Number*	*Qty.*	*Description*
1	110-6459	1	Seal Kit
1:1		1	Seal-Shaft ●
1:2		5	Seal-Body ●
1:3		1	Seal-Dirt / Water ●
1:4		1	Seal-Commutator ●
2	3257-42	1	Key-Woodruff

● Not serviced separately

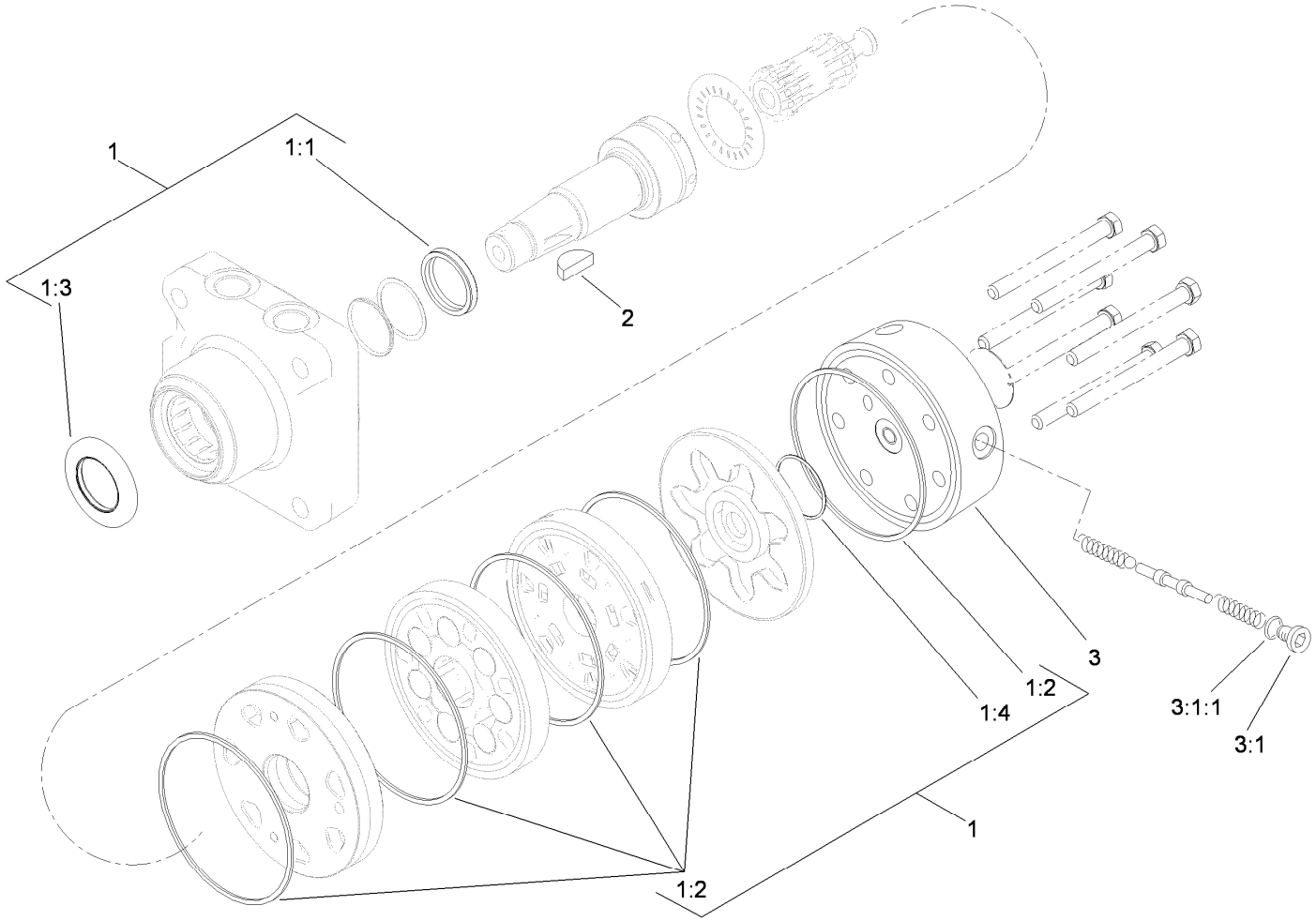

Hydraulic Motor Assembly No. 108-2947

Ref.	*Part Number*	*Qty.*	*Description*
1	110-6459	1	Seal Kit
1:1		1	Seal-Shaft ●
1:2		5	Seal-Body ●
1:3		1	Seal-Dirt / Water ●
1:4		1	Seal-Commutator ●
2	3257-42	1	Key-Woodruff
3	110-3381	1	End Cover ASM
3:1	353-990	1	Plug
3:1:1	237-78	1	O-Ring

● Not serviced separately

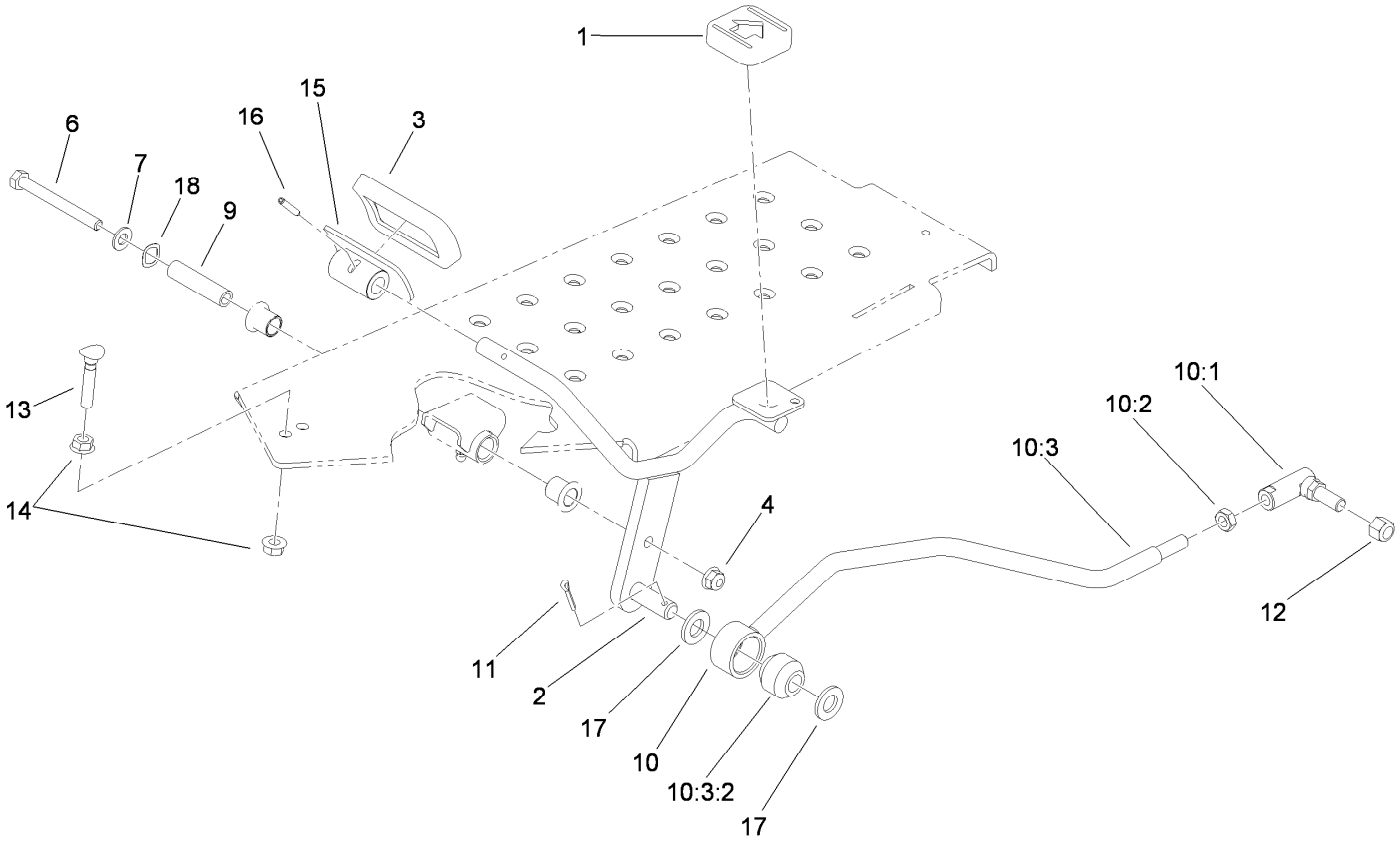

Traction Pedal Assembly

Ref.	Part Number	Qty.	Description
1	74-9110	1	Pad-Pedal, Reverse
2	108-5498-01	1	Pedal ASM
3	74-9100	1	Pad-Pedal, Forward
4	104-8300	1	Nut-Flange, NI
6	322-14	1	Screw-HH
7	3256-23	1	Washer-Flat
9	85-8960	1	Spacer
10		1	Traction Rod ASM ●
10:1	68-3840	1	Joint-Ball, RH Threaded
10:2	3220-3	1	Nut-HJ

Ref.	Part Number	Qty.	Description
10:3	110-8160	1	Rod ASM
10:3:2	23-2270	1	Bushing-Rubber
11	3272-10	1	Pin-Cotter
12	3296-6	1	Nut-Lock
13	17-9420	1	Screw-Handle
14	32128-20	2	Nut-HF
15	49-6440-03	1	Pedal-Forward
16	32121-45	1	Pin-Spring
17	106-9888	2	Washer-Flat
18	108473	1	Washer-Wave

● Not serviced separately

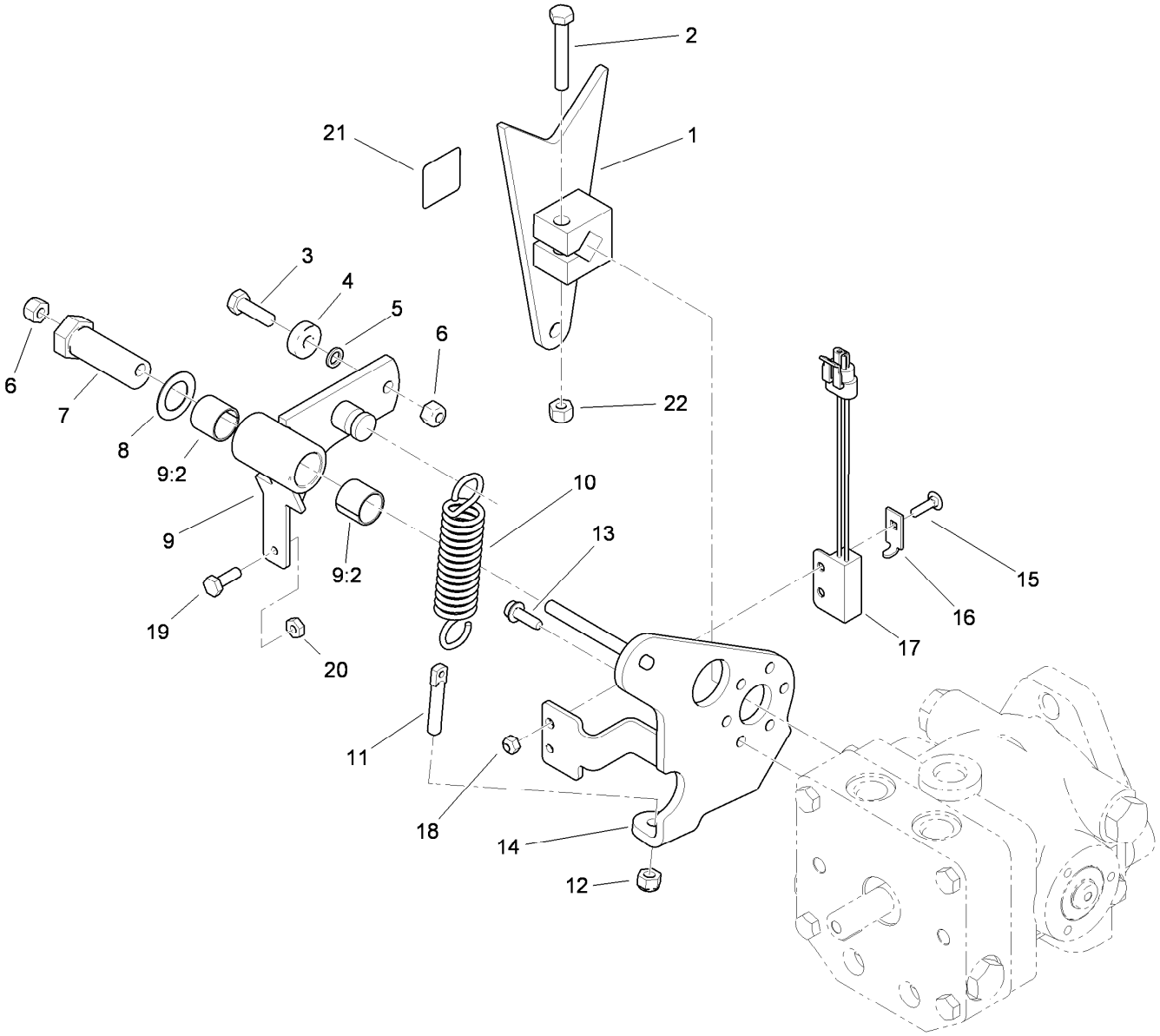

Pump Control Lever Assembly

Ref.	Part Number	Qty.	Description
1	112-6458-03	1	Pump Lever ASM
2	323-11	1	Screw-HH
3	322-5	1	Screw-HH
4	251-307	1	Bearing-Ball
5	75-5470	1	Spacer-Bearing
6	3296-29	2	Nut-Lock, NI
7	76-8640	1	Stud-Traction
8	3-6498	1	Washer-Thrust
9	108-5493	1	Arm ASM
9:2	94-9609	2	Bushing-Straight
10	85-9030	1	Spring-Extension
11	18-6380	1	Pin-Adjustment, Steering

Ref.	Part Number	Qty.	Description
12	3296-4	1	Nut-Lock
13	49-2040	3	Screw-HWHTF
14	108-5490-03	1	Pump Plate ASM
15	3229-20	1	Screw-CARR
16	100-4872	1	Plate-Switch, Neutral
17	105-0023	1	Switch-Proximity
18	3296-2	1	Nut-Lock, NI
19	321-4	1	Screw-HH
20	3218-1	1	Nut-Jam
21	93-9051	1	Decal-Bolt, Eccentric
22	3296-39	1	Nut-Lock, NI

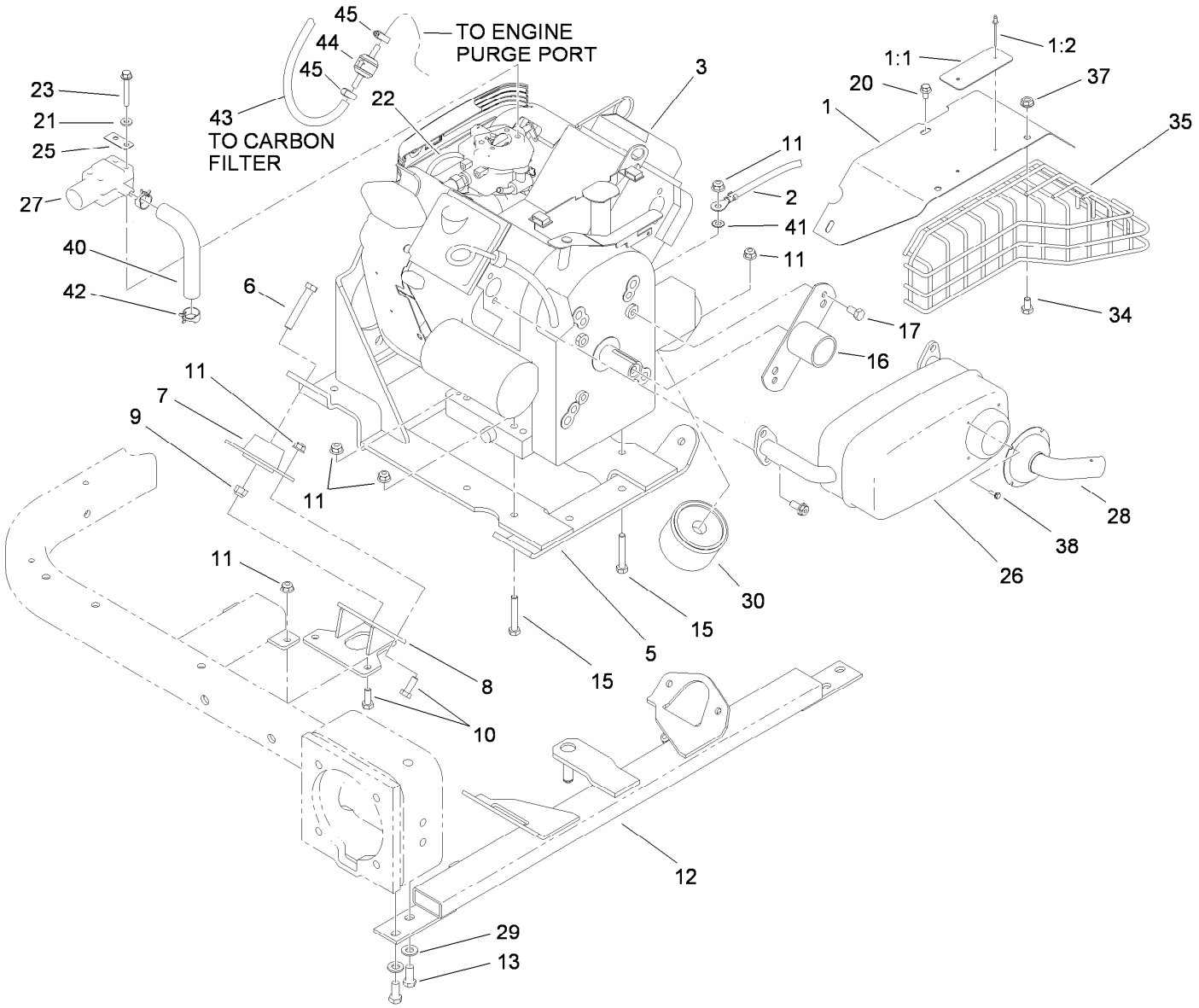

Engine Installation Assembly

Ref.	Part Number	Qty.	Description
1	105-8523	1	Muffler Shield ASM
1:1	95-0645	1	Plate-Surface, Hot
1:2	3269-32	2	Rivet-Pop
2	54-3093	1	Cable-Battery, Negative
3	119-2465	1	Engine-Briggs & Stratton, 356447-0286-G2 ●
5	108-2809-03	1	Engine Support ASM
6	323-11	4	Screw-HH
7	83-1030	4	Mount-Engine
8	108-8474-01	2	Front Mount ASM
9	104-8301	4	Nut-Flange, NI
10	322-4	12	Screw-HH
11	104-8300	16	Nut-Flange, NI
12	108-2819-01	1	Engine Mount ASM
13	323-5	4	Screw-HH
15	322-10	4	Screw-HH
16	95-0632-03	1	Cover ASM
17	3210-2	2	Screw-HH
20	33103-012	3	Screw-HHF
21	3256-16	4	Washer-Flat
22	110-8181	1	Hose-Fuel
23	33103-045	4	Screw-HHF
25	108-8427	2	Gasket-Carburetor
26	114-0628	1	Muffler-Inlet, Dual
27	108-2829	1	Adaptor-Carburetor
28	110-1306	1	Pipe-Tail
29	3256-24	4	Washer-Flat
30	107-7817	1	Filter-Oil, Engine
34	3234-14	3	Screw-HHF
35	110-6348-03	1	Shield-Exhaust
37	32128-25	3	Nut-HF
38	32144-87	4	Screw-HWHTF
40	112-6461	1	Hose-Adapter, Carboretor
41	3255-8	1	Washer-Lock
42	2412-143	2	Clamp-Hose
43	117-9569	1	Hose-Fuel
44	115-7868	1	Valve-Check, Vacuum
45	2412-108	2	Clamp-Worm

● Obtain parts from www.briggsandstratton.com

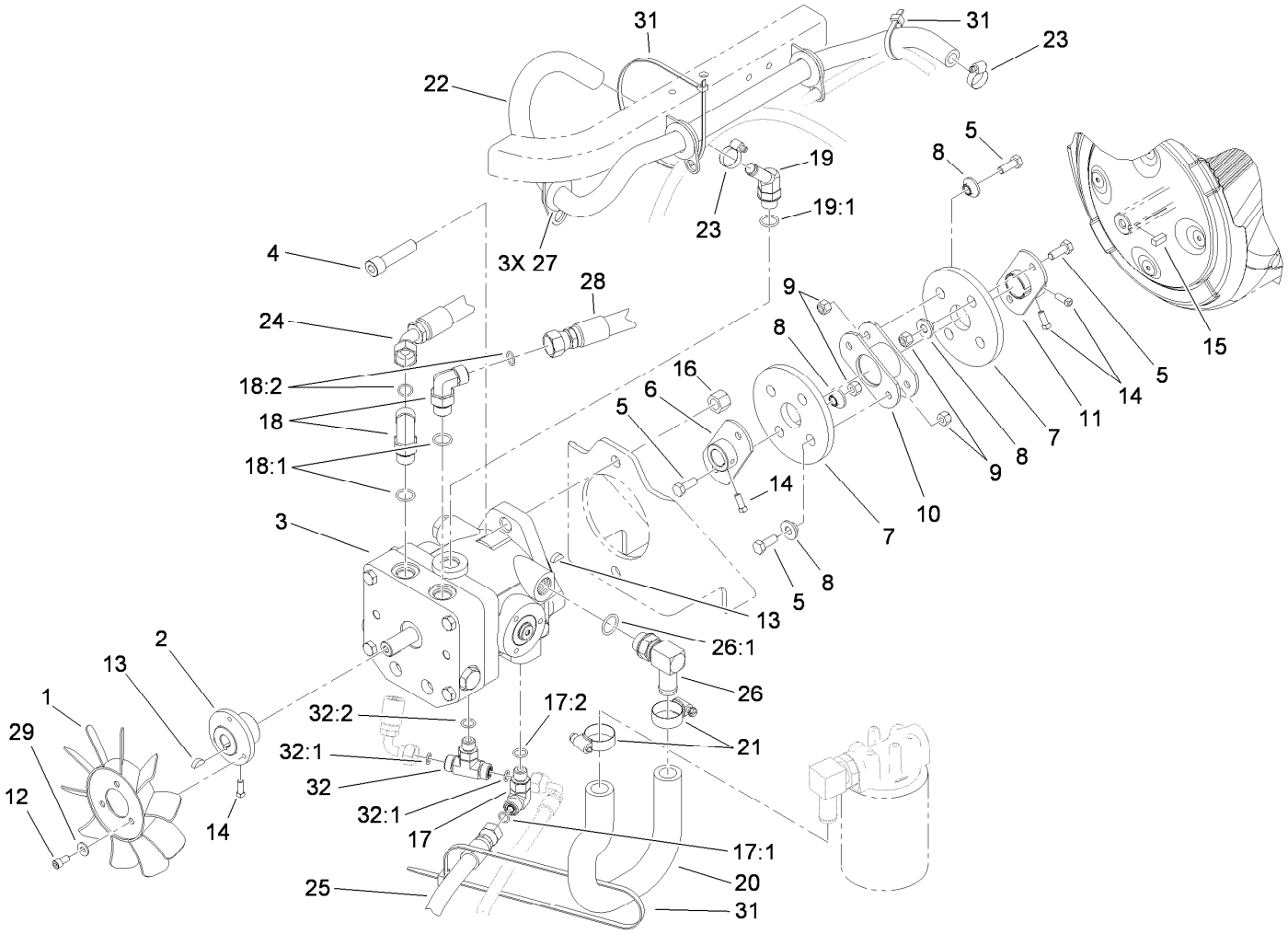

Pump and Coupling Assembly

Ref.	Part Number	Qty.	Description
1	1-633869	1	Fan-Pump, Cooling
2	108-5484	1	Hub-Fan
3	114-0612	1	Variable Piston Pump ASM
4	3274-5	2	Screw-HSH
5	322-4	8	Screw-HH
6	85-8700	1	Hub-Pump
7	80-8650	2	Coupling-Drive
8	27-6600	8	Spacer-Coupling
9	3296-47	8	Nut-Lock, NI
10	85-8770	1	Coupling
11	85-8730	1	Hub-Engine
12	3274-52	3	Screw-HSH
13	3257-32	2	Key-Woodruff
14	3241-7	6	Screw-SQH
15	85-9020	1	Key-Square
16	3296-23	2	Nut-Lock, NI
17	340-77	1	Fitting-HYD, 90 DEG
17:1	237-22	1	O-Ring
17:2	237-42	1	O-Ring
18	340-98	2	Fitting-HYD, 90 DEG

Ref.	Part Number	Qty.	Description
18:1	237-79	1	O-Ring
18:2	237-30	1	O-Ring
19	354-126	1	Fitting-HYD, 45 DEG
19:1	237-79	1	O-Ring
20	108-5481	1	Hose-Suction
21	2412-129	2	Clamp-Hose
22	110-1325	1	Hose-Return
23	2412-36	2	Clamp-Hose
24	108-8440	1	Hose ASM
25	108-8428	1	HYD Hose ASM
26	87-8170	1	Fitting
26:1	237-80	1	O-Ring
27	240-4	3	Grommet-Rubber
28	110-1322	1	HYD Hose ASM
29	3256-22	3	Washer-Flat
31	3290-379	4	Tie-Cable
32	340-94	1	Adapter
32:1	237-22	2	O-Ring
32:2	237-42	1	O-Ring

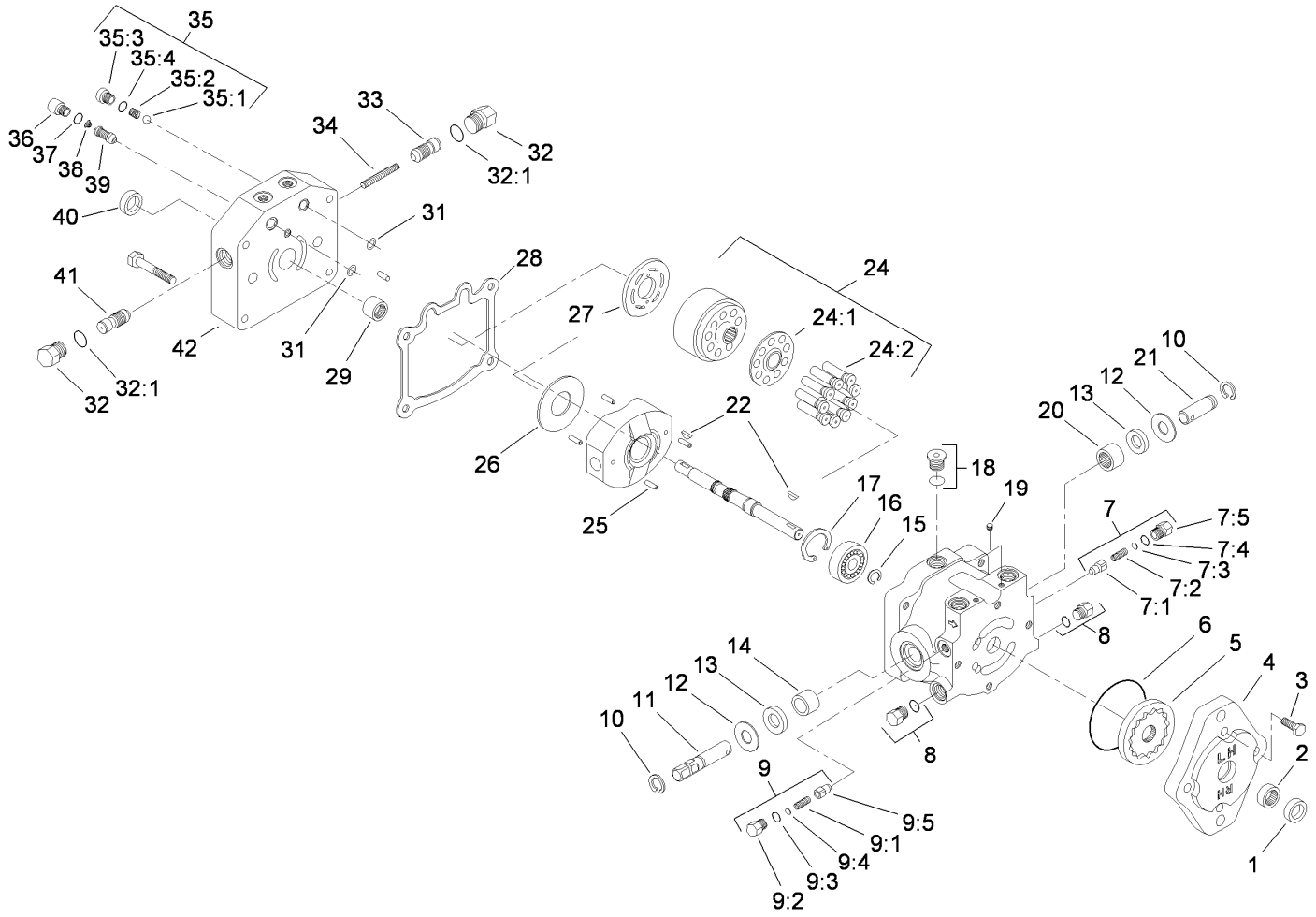

Variable Piston Pump Assembly No. 114-0612

Ref.	Part Number	Qty.	Description
1	110-6337	1	Seal-Lip
2	67-8050	1	Bearing-Needle
3	322-4	4	Screw-HH
4	114-0611	1	Housing-Pump, Charge
5	95-5812	1	Gerotor ASM
6	237-95	1	O-Ring
7	49-8520	1	Implement Relief Kit
7:1	83-7260	1	Cone-Relief, Charge
7:2	25-2570	1	Spring-Valve
7:3	25-2470	1	Pack-Shim
7:4	237-86	1	O-Ring
7:5	25-2460	1	Plug-HH
8	67-8030	2	Plug ASM
9	49-8510	1	Valve Kit
9:1	25-2480	1	Spring-Valve
9:2	25-2460	1	Plug-HH
9:3	237-86	1	O-Ring
9:4	25-2470	1	Pack-Shim

Ref.	Part Number	Qty.	Description
9:5	83-7260	1	Cone-Relief, Charge
10	32151-46	2	Ring-Retaining
11	88-8180	1	Shaft-Trunnion
12	25-2510	2	Washer-Flat
13	25-3210	2	Seal-Lip
14	88-8190	1	Bearing-Journal
15	94-3996	1	Ring-Retaining
16	95-5809	1	Bearing-Ball
17	32151-75	1	Ring-Retaining
18	67-9090	1	Plug ASM
19	75-0160	1	Plug-Pipe
20	110-6339	1	Bearing-Needle
21	25-2500	1	Shaft-Trunnion
22	3257-32	2	Key-Woodruff
24	48-1800	1	Cylinder Block Kit
24:1		1	Retainer-Slipper ●
24:2		9	Piston ASM ●
25	32121-91	4	Pin-Spring

● Not serviced separately

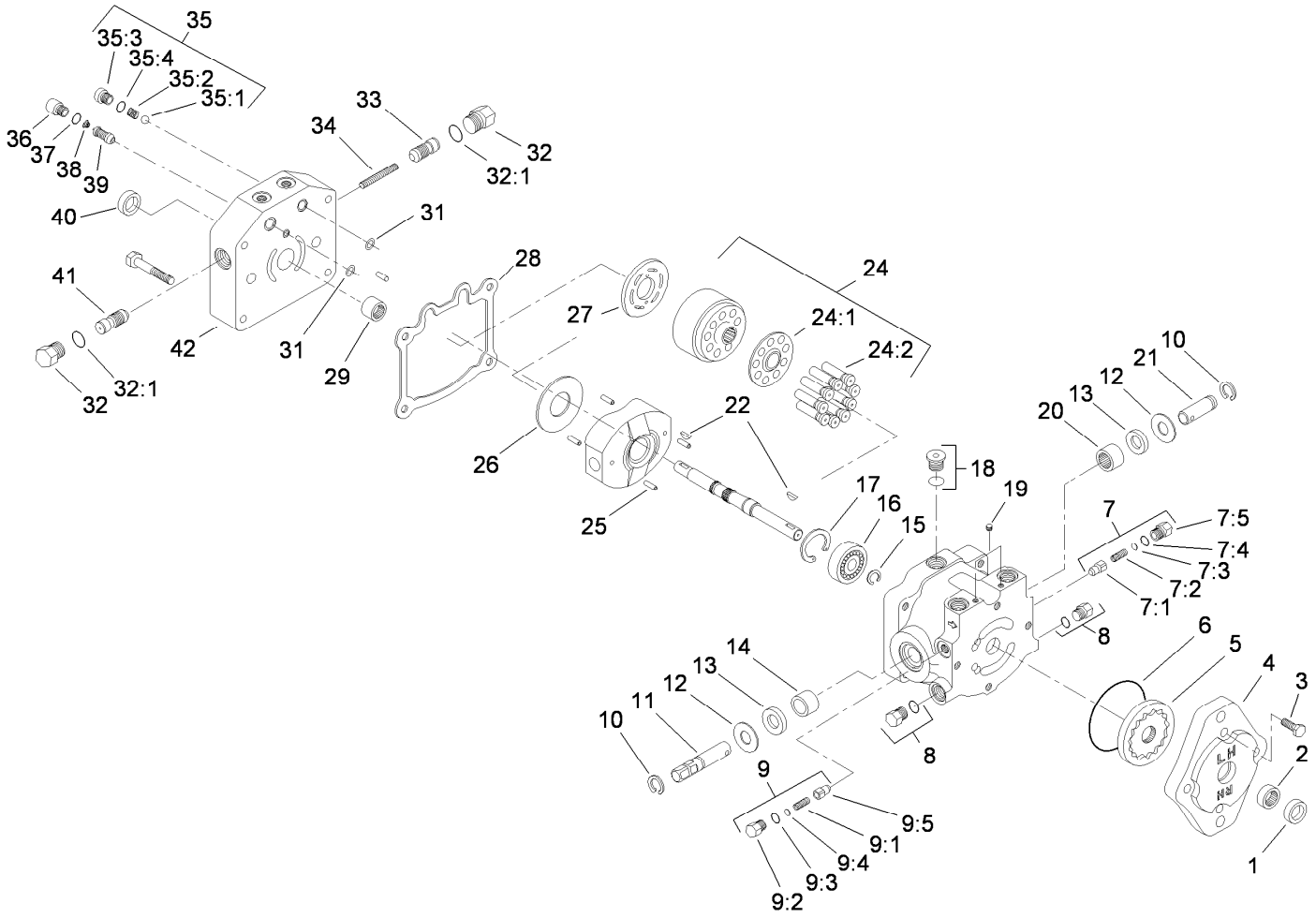

Variable Piston Pump Assembly No. 114-0612 (continued)

Ref.	Part Number	Qty.	Description
26	25-2510	1	Washer-Flat
27	88-8160	1	Plate-Valve
28	25-2400	1	Gasket
29	110-6341	1	Bearing-Roller
31	112-7652	2	O-Ring
32	28-3440	1	Plug-Threaded
32:1	75-0240	1	O-Ring
33	98-0920	1	Valve-Acceleration
34	25-2610	1	Spring-Valve
35	99-5689	1	Check Valve Kit
35:1	25-2490	1	Ball

Ref.	Part Number	Qty.	Description
35:2	25-2640	1	Spring-Valve
35:3	25-2650	1	Plug-Valve, Check
35:4	237-86	1	O-Ring
36	75-0190	1	Plug-Special
37	75-0240	1	O-Ring
38	110-6342	1	Spring
39	110-6343	1	Valve-Scr
40	88-8230	1	Seal-Lip
41	98-0920	1	Valve-Acceleration
42	112-7651	1	Cap-End

● Not serviced separately

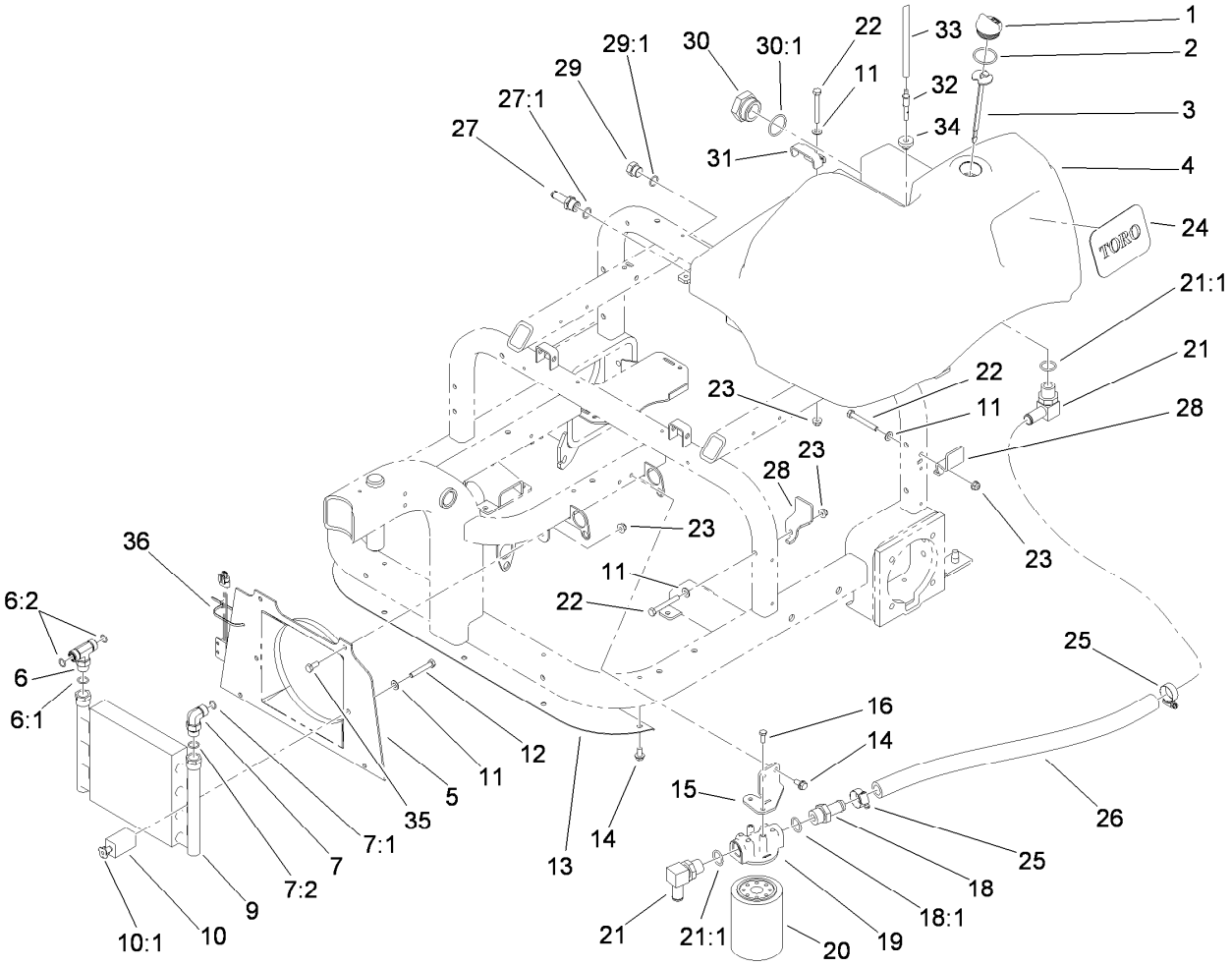

Hydraulic Tank, Filter and Cooler Assembly

Ref.	Part Number	Qty.	Description
1	93-7498	1	Plug-Plastic
2	237-101	1	O-Ring
3	108-7996	1	Dipstick ASM
4	108-2937	1	Tank-HYD
5	108-5477	1	Shroud-Fan
6	340-157	1	Fitting-HYD, Tee
6:1	237-79	1	O-Ring
6:2	237-30	2	O-Ring
7	340-98	1	Fitting-HYD, 90 DEG
7:1	237-79	1	O-Ring
7:2	237-30	1	O-Ring
9	108-8457	1	Cooler-Oil
10	85-9550	2	Rubber Clamp ASM
10:1	85-9670	1	T-Nut
11	3256-23	7	Washer-Flat
12	322-10	2	Screw-HH
13	108-5480-03	1	Panel-Cooler
14	32144-14	7	Screw-HWHTF
15	108-5482	1	Bracket-Filter, Oil
16	3234-4	2	Screw-HHF
18	354-73	1	Fitting-Straight
18:1	237-81	1	O-Ring
19	68-8990	1	Filter Head ASM

Ref.	Part Number	Qty.	Description
20	54-0110	1	Filter-Oil, Transmission
21	353-987	2	Fitting-HYD, 90 DEG (Barbed)
21:1	237-81	1	O-Ring
22	322-12	5	Screw-HH
23	104-8300	9	Nut-Flange, NI
24	108-8452	1	Decal-Logo
25	2412-129	2	Clamp-Hose
26	108-5483	1	Hose-Suction, Tank
27	354-121	1	Fitting-Straight
27:1	237-79	1	O-Ring
28	108-7965	2	Clamp-Tank, HYD
29	353-550	1	Plug-HYD, HH
29:1	237-79	1	O-Ring
30	108-8468	1	Plug-HH
30:1	237-101	1	O-Ring
31	108-7903	1	Clamp-Tank
32	110-1372	1	Fitting-Vent, Tank
33	110-8181	1	Hose-Fuel
34	46-6560	1	Bushing
35	322-3	4	Screw-HH
36	3290-379	1	Tie-Cable

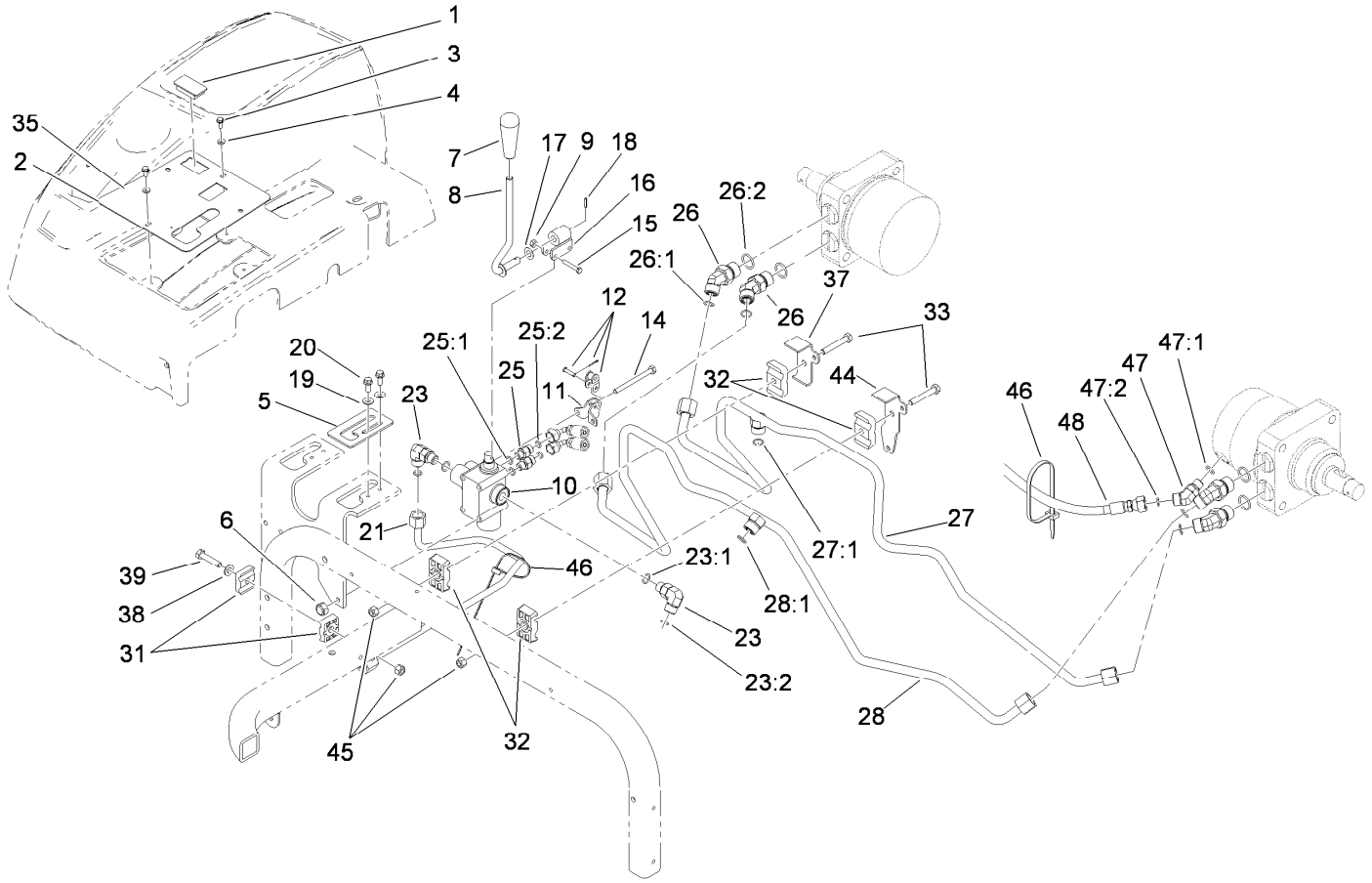

Lift Valve and Rear Tube Assembly

Ref.	Part Number	Qty.	Description
1	99-7420	1	Plug-Hole
2	108-7909-03	1	Panel-Control
3	3290-321	4	Screw-HWH
4	3256-51	4	Washer-Flat
5	108-7941	1	Plate-Guide, Lever
6	3296-42	3	Nut-Lock, NI
7	98-0152	1	Knob-Tapered
8	108-7942	1	Rear Lever ASM
9	3296-2	2	Nut-Lock, NI
10	43-1710	1	Valve ASM
11	88-8480	1	Bracket-Pivot
12	2710-20	1	Link-Offset
14	321-23	3	Screw-HH
15	3290-360	2	Screw-HH
16	98-8159	1	Pivot
17	3290-477	1	Washer-Curved
18	32121-73	1	Pin-Roll
19	3256-1	2	Washer-Flat
20	3234-33	2	Screw-HHF
21	108-8416	1	Tube ASM
23	340-77	2	Fitting-HYD, 90 DEG
23:1	237-22	1	O-Ring
23:2	237-42	1	O-Ring
25	340-92	2	Fitting-HYD, Straight

Ref.	Part Number	Qty.	Description
25:1	237-78	1	O-Ring
25:2	237-21	1	O-Ring
26	340-89	4	Fitting-HYD, 45 DEG
26:1	237-30	1	O-Ring
26:2	237-80	1	O-Ring
27	108-8406	1	Tube ASM
27:1	237-30	1	O-Ring
28	110-1323	1	Tube ASM
28:1	237-30	1	O-Ring
31	56-7973	2	Clamp-Tube
32	56-7976	4	Clamp-Tube
33	322-10	2	Screw-HH
35	108-8484	1	Decal-Lift, Rear
37	110-1333	1	Bracket-Clamp
38	3256-23	1	Washer-Flat
39	322-7	1	Screw-HH
44	110-1332	1	Bracket-Clamp
45	3296-29	3	Nut-Lock, NI
46	3290-378	2	Tie-Cable
47	340-87	1	Fitting-HYD, 45 DEG
47:1	237-22	1	O-Ring
47:2	237-42	1	O-Ring
48	112-1411	1	Hose-HYD

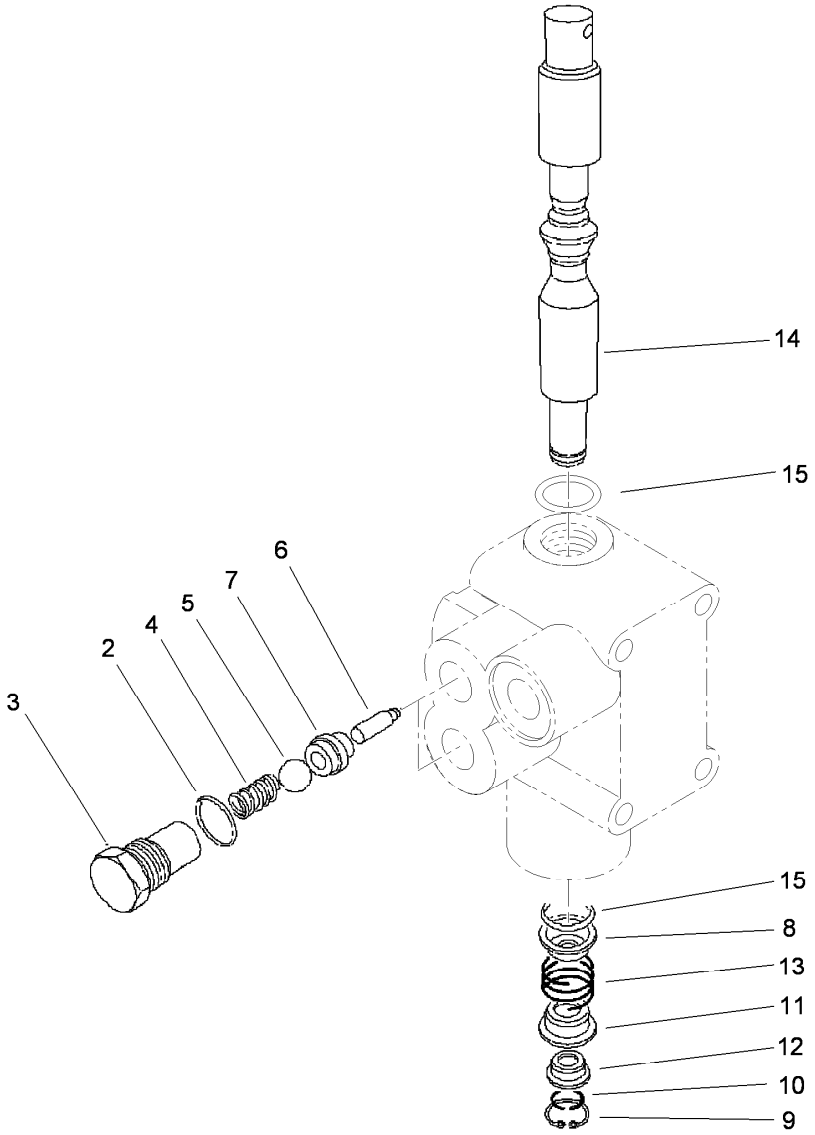

Valve Assembly No. 43-1710

Ref.	Part Number	Qty.	Description
2	237-42	2	O-Ring
3	22-8330	2	Plug
4	22-8340	2	Spring
5	22-8350	2	Ball
6	22-8360	2	Pin
7	22-8370	2	Seat-Valve
8	22-8380	1	Retainer
9	22-8490	1	Ring-Snap
10	22-8480	1	Ring-Snap
11	22-8390	1	Retainer
12	22-8400	1	Spacer
13	22-8410	1	Spring
14	22-8420	1	Spool
15	22-8500	2	O-Ring

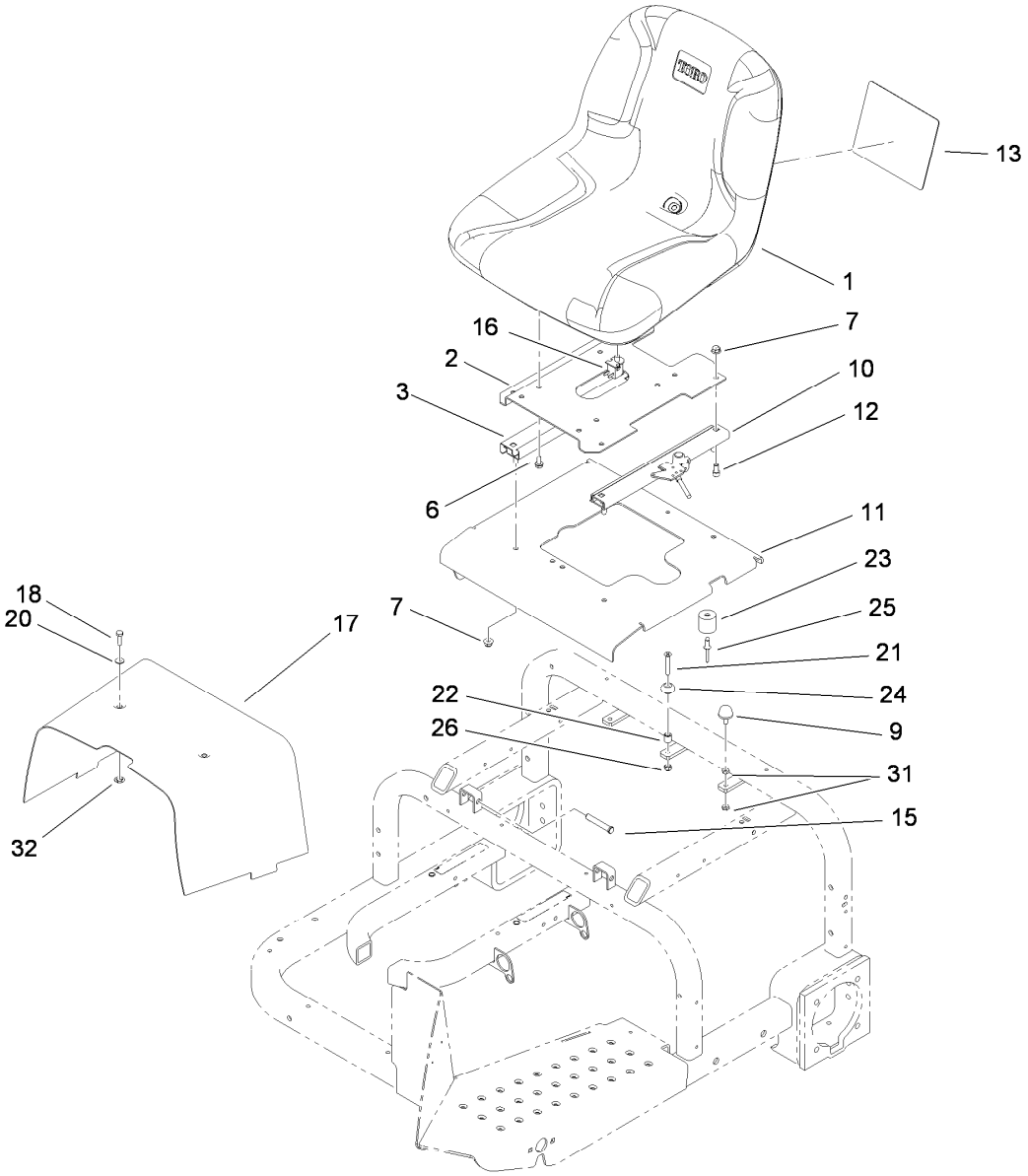

Seat and Shroud Assembly

Ref.	Part Number	Qty.	Description
1	108-6878	1	Seat
2	108-7931-03	1	Base-Seat
3	51-0780	1	Slider-Seat
6	3234-14	4	Screw-HHF
7	104-8300	8	Nut-Flange, NI
9	1-523420	2	Bumper
10	51-0790	1	Adjuster-Seat, LH
11	112-1445-03	1	Seat ASM
12	3274-12	4	Screw-HSH
13	108-8418	1	Decal-Service
15	112-7153	2	Pin
16	82-2190	1	Switch-Bail

Ref.	Part Number	Qty.	Description
17	108-6859-01	1	Shroud-Center
18	321-5	2	Screw-HH
20	3256-1	2	Washer-Flat
21	32108-9	1	Screw-FH
22	609588	1	Spacer
23	99-7830	1	Rubber Receptical ASM
24	99-7833	1	Post-Holding
25	3290-412	1	Rivet
26	3296-42	1	Nut-Lock, NI
31	3218-1	4	Nut-Jam
32	106-8737	2	Nut-Retainer

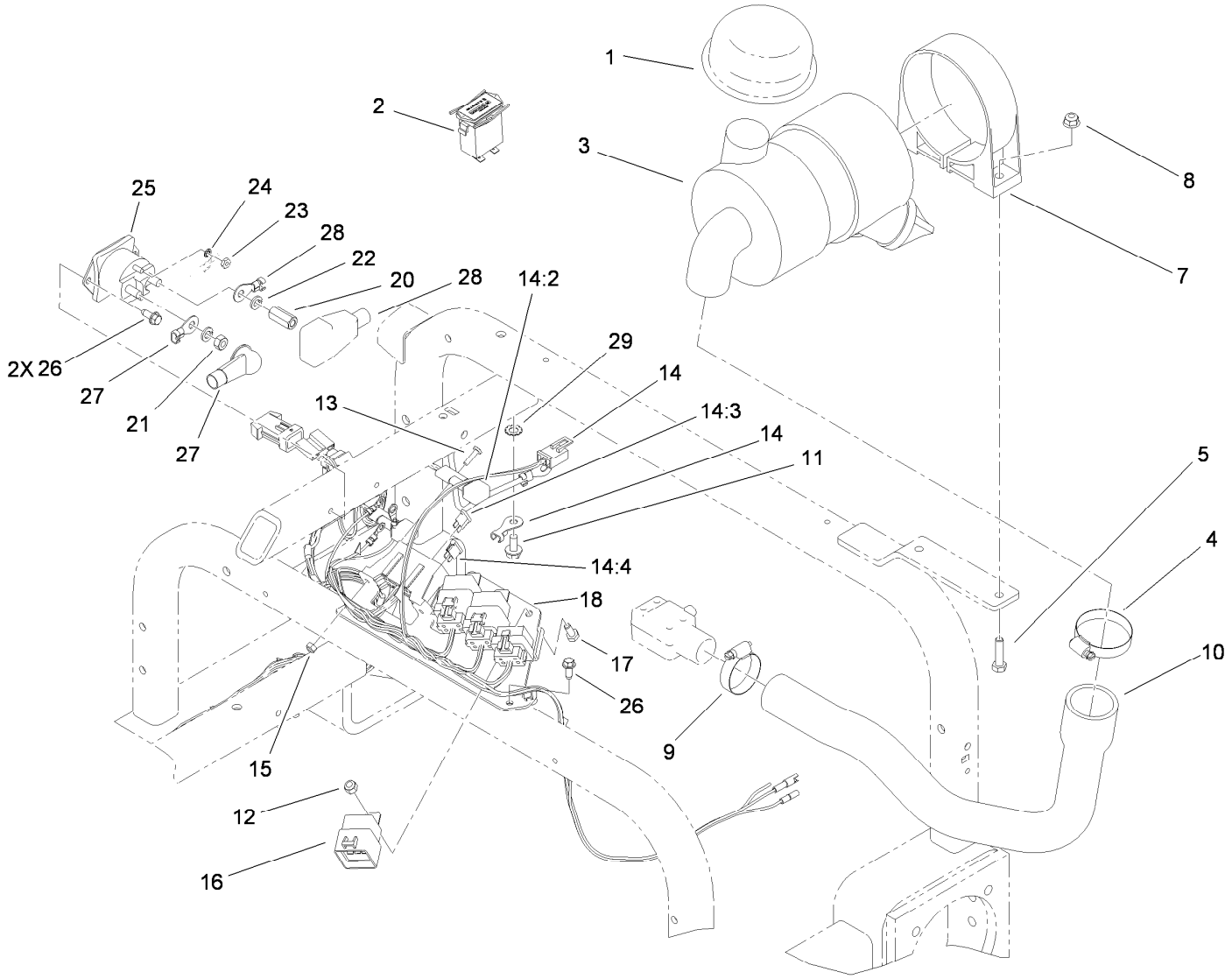

Wire Harness, Air Cleaner and Hose Assembly

Ref.	Part Number	Qty.	Description
1	46-7510	1	Hood-Inlet, Air
2	1-513374	1	Meter-Hour
3	93-2190	1	Air Cleaner ASM
4	2412-92	1	Clamp-Hose
5	322-6	2	Screw-HH
7	95-5806	1	Bracket-Mounting
8	104-8300	2	Nut-Flange, NI
9	2412-3	1	Clamp-Hose
10	108-8401	1	Hose-Air
11	32144-14	1	Screw-HWHTF
12	3296-42	3	Nut-Lock, NI
13	3250-13	2	Screw-PPH
14	112-1446	1	Harness-Wire
14:2	100-4918	2	Diode
14:3	218-578	1	Fuse-Blade, 10 Amp

Ref.	Part Number	Qty.	Description
14:4	109355	1	Fuse-Blade, 15 Amp
15	3296-2	2	Nut-Lock, NI
16	99-7430	3	Relay
17	321-3	3	Screw-HH
18	112-1444-01	1	Bracket-Relay
20	110-3380	1	Nut-Standoff
21	3218-13	1	Nut-Jam, Brass
22	3253-4	2	Washer-Lock
23	3219-14	2	Nut-Hex
24	3254-1	2	Washer-Lock, Int
25	28-4210	1	Solenoid
26	32144-10	4	Screw-HWH
27	110-3315	1	Cable-Positive, Starter
28	110-3314	1	Cable-Positive, Battery
29	3255-9	1	Washer-Lock

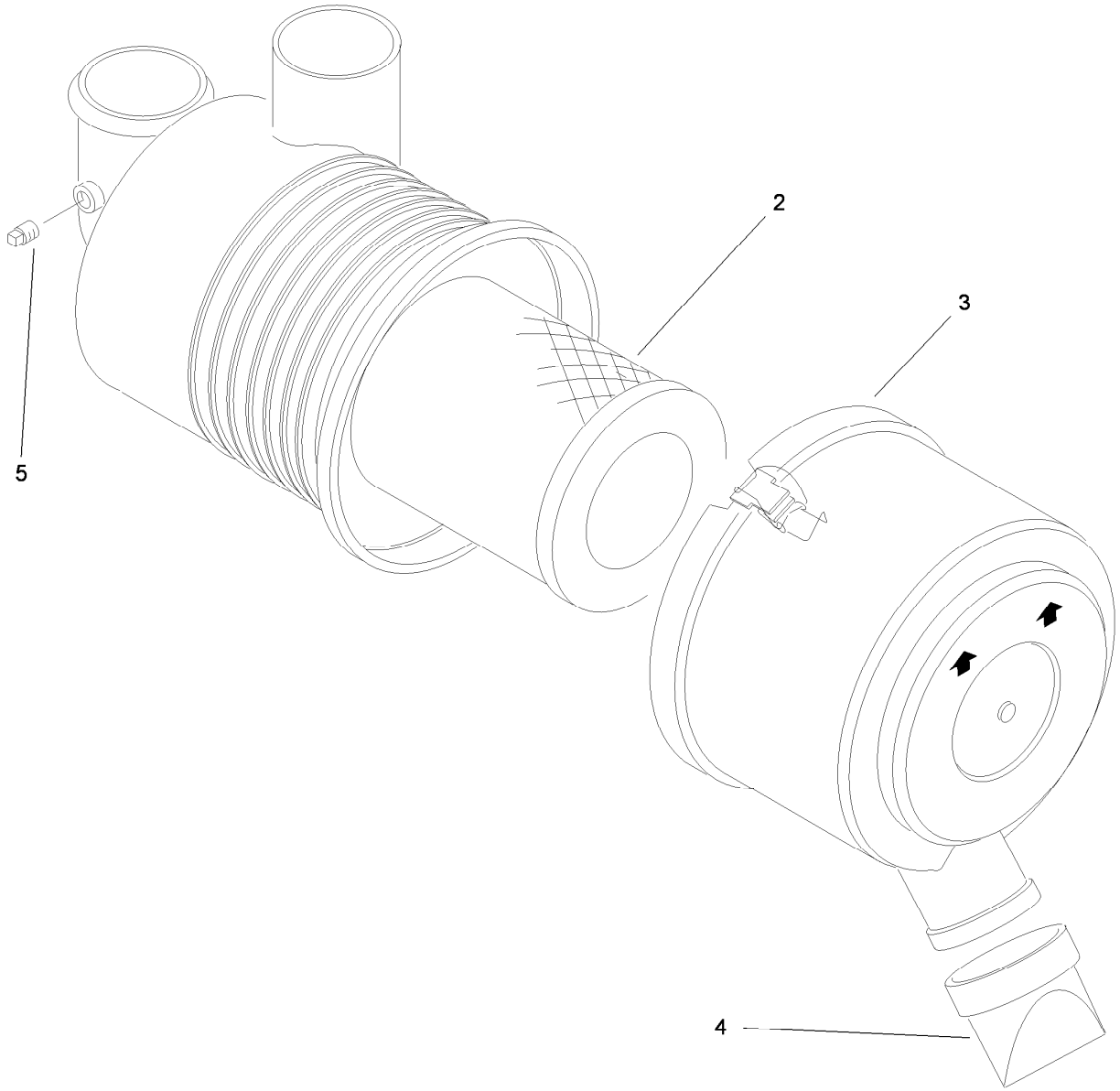

Air Cleaner Assembly No. 93-2190

Ref.	*Part Number*	*Qty.*	*Description*
2	108-3811	1	Filter-Air
3	94-3652	1	Cover ASM
4	87-9400	1	Valve-Vacuator
5	285-17	1	Plug-Pipe

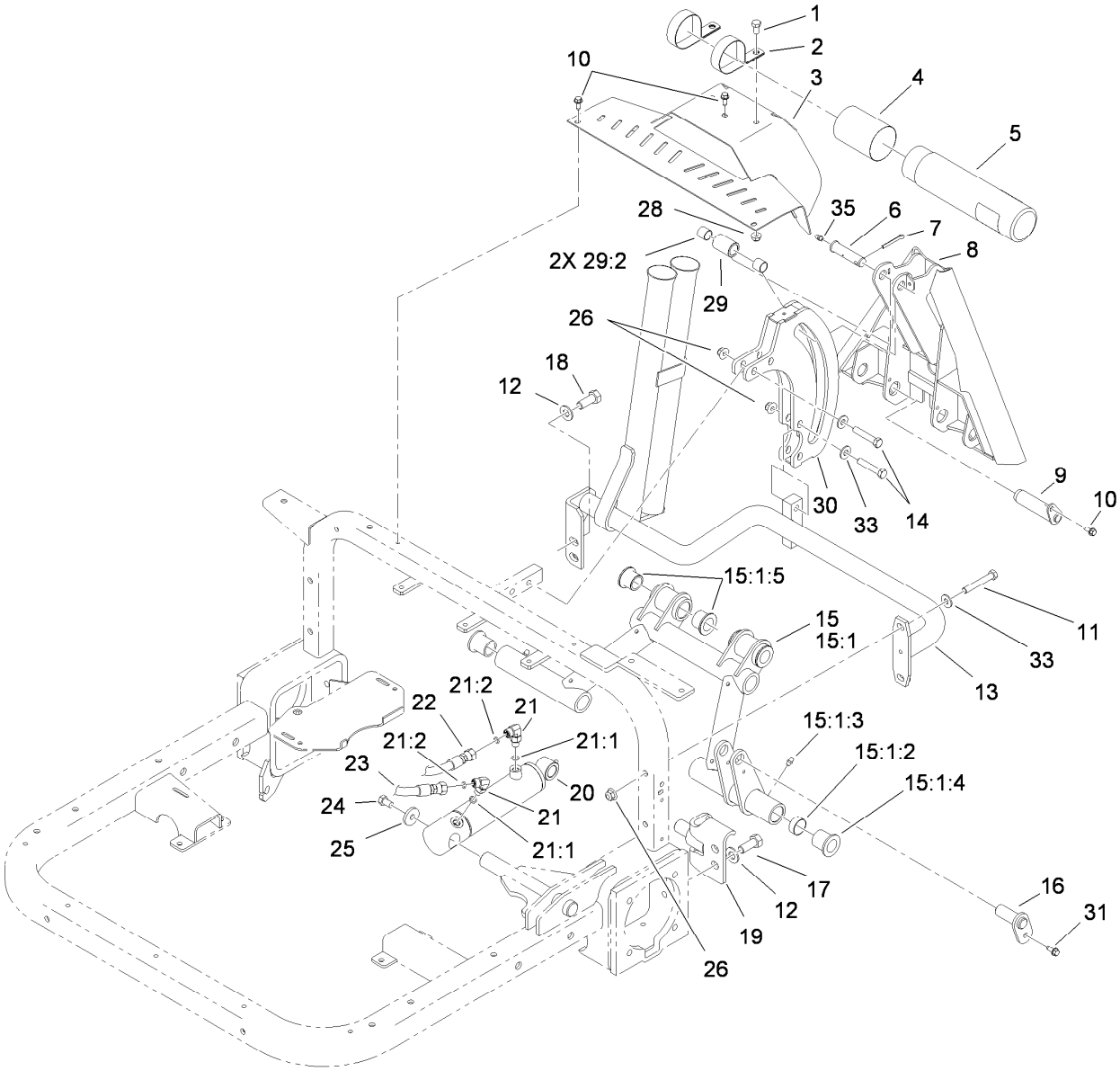

Rear Hitch Assembly

Ref.	Part Number	Qty.	Description
1	322-2	2	Screw-HH
2	2412-133	2	R-Clamp
3	108-7970-01	1	Rear Cover ASM
4	104-7048	1	Cap-Housing
5	104-7050	1	Tube-Manual
6	108-2282	1	Pin-Clevis
7	3272-23	1	Pin-Cotter
8	108-6870-01	1	Adapter ASM
9	108-6885	2	Pin ASM
10	32144-10	5	Screw-HWH
11	323-12	2	Screw-HH
12	3256-26	4	Washer-Flat
13	108-6860-03	1	Hitch Frame ASM
14	323-10	4	Screw-HH
15	117-4691-01	1	Tube-Rear
15:1		1	Rear Tube ASM ●
15:1:2	110-3365	2	Plug-Expansion
15:1:3	302-5	4	Fitting-Grease

Ref.	Part Number	Qty.	Description
15:1:4	95-3577	2	Bushing
15:1:5	33-3090	4	Bushing
16	115-5648	1	Pin-Flag
17	325-4	2	Screw-HH
18	325-5	2	Screw-HH
19	114-0619	2	Pivot Pin ASM
20	115-5647	1	HYD Lift Cylinder ASM
21	340-132	2	Fitting-HYD, 90 DEG
21:1	237-78	1	O-Ring
21:2	237-21	1	O-Ring
22	95-8837	1	Hose ASM
23	100-3833	1	HYD Hose ASM
24	323-34	1	Screw-HH
25	53-6380	1	Washer-Flat
26	104-8301	6	Nut-Flange, NI
28	104-8300	2	Nut-Flange, NI
29	108-5472	1	Tube ASM
29:2	256-311	2	Bushing-Split

● Not serviced separately

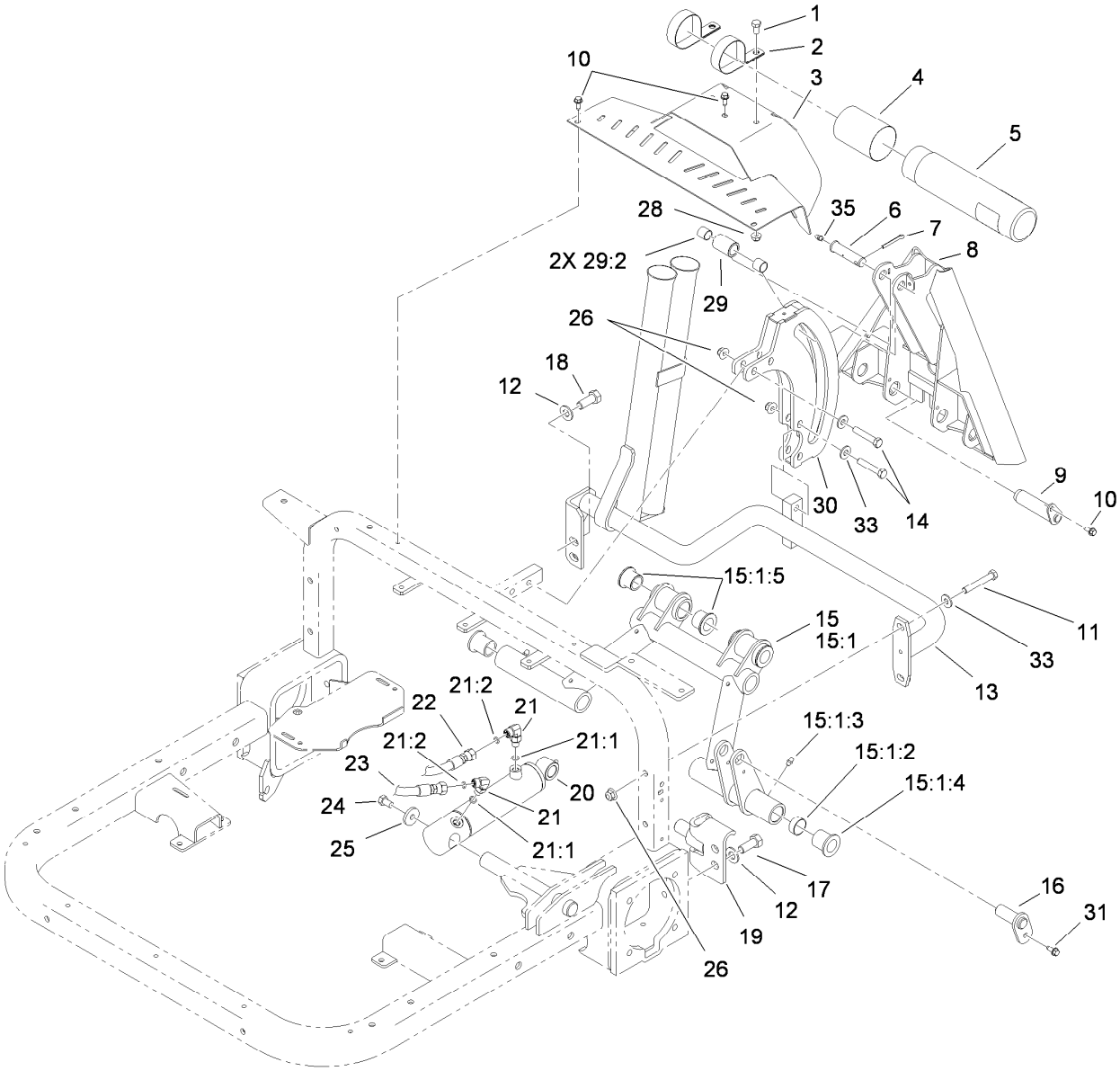

Rear Hitch Assembly (continued)

Ref.	Part Number	Qty.	Description
30	110-1368-01	1	Roller Plate ASM
31	32144-10	1	Screw-HWH

Ref.	Part Number	Qty.	Description
33	3256-3	6	Washer-Flat
35	302-5	1	Fitting-Grease

● Not serviced separately

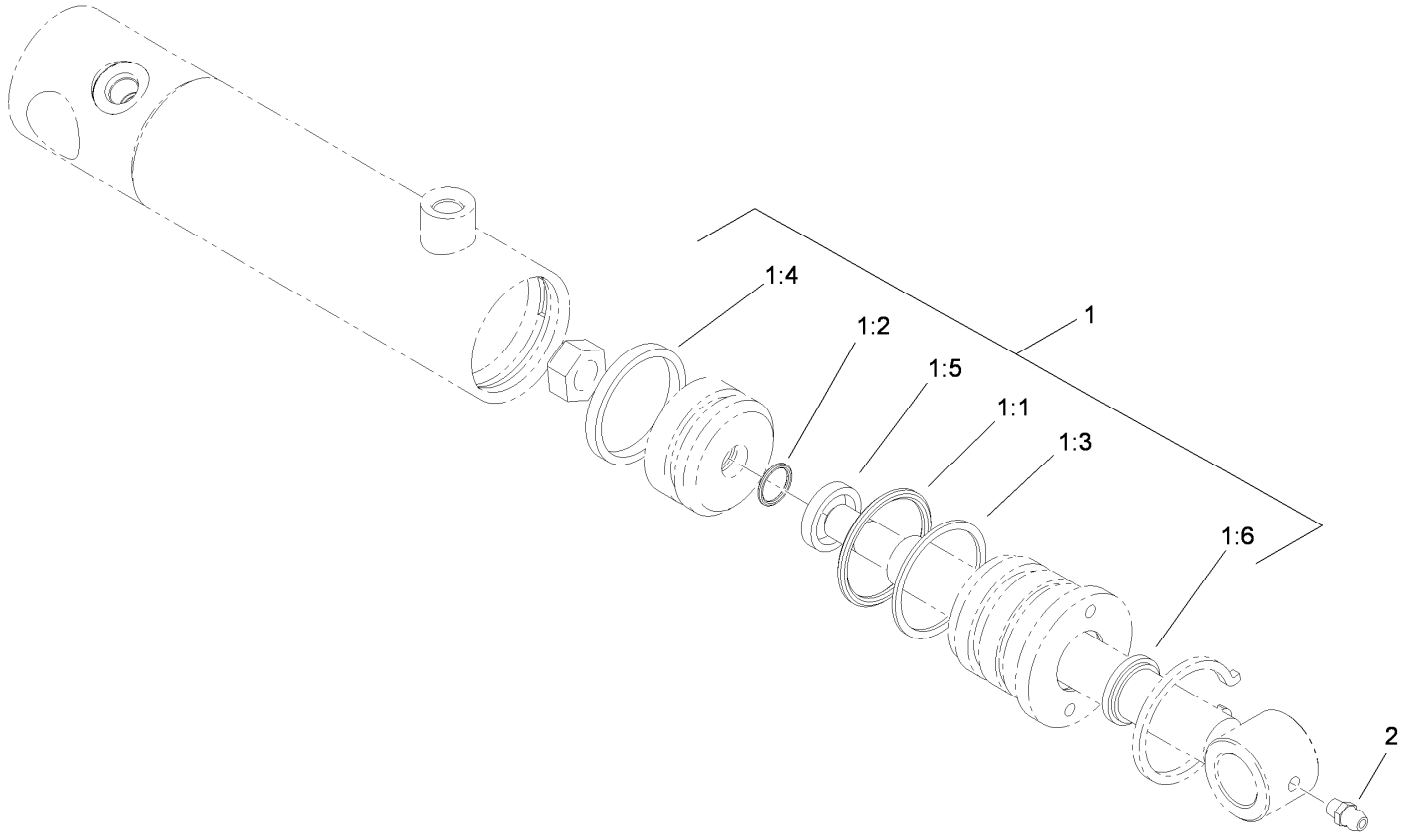

Hydraulic Lift Cylinder Assembly No. 115-5647

Ref.	*Part Number*	*Qty.*	*Description*
1	108-4597	1	Seal Kit
1:1		1	Ring-Retaining ●
1:2		1	Ring-Retaining ●
1:3		1	Ring-Back Up ●
1:4		1	Seal-Psp ●
1:5		1	Seal-Rod ●
1:6		1	Seal-Dust ●
2	302-5	1	Fitting-Grease

● Not serviced separately

Attachments and Accessories

For 08705 Sand Pro 5040 Traction Unit

Product Name	Model/Part
Front Lift Frame	08712
Manual Blade	08714
Midmount Toolbar System	08731
Tooth Rake	08751
Spring Rake	08752
Rear Broom	08753
Finish Grader	08754
Spiker	08755
Drag Mat Carrier System	08756
Debris Blower	08759
QAS Utility Box	08760
QAS Nail Drag	08761
QAS Bunker Pump	08765
Rear Remote Hydraulic Kit	08781
Front Remote Hydraulics	08782
Screen-Spark Arrestor	104-6540
Yellow Hydraulic Cap	107-1576
Red Gas Cap	107-2173
Light Kit	110-1314
Speed Limiter Kit	110-1371
Draw Bar Hitch Assembly	110-1375
Smooth Wheel and Tire ASM	112-0034
Drag Mat Assembly	112-1424
Variable Orifice Kit	112-1433
Carbide Tine Pack	119-2152
MVP Filter Kit	30035
Wheel and Tire Assembly	94-6126

TORO®

Count on it.