Form No. 3372-273 Rev B

TORO®

Count on it.

Parts Catalog

# Sand Pro® 5040 Traction Unit

**Model No. 08705—Serial No. 312000001 and Up**

Register at www.Toro.com.
Original Instructions (EN)

CE

*3372-273* B

# Ordering Replacement Parts

To order replacement parts, please supply the part number, the quantity, and the description of each part desired.

**Understanding Reference Numbers**

Each identified part in an illustration has a reference number. The reference number for a part also appears in the parts list, along with other information about the part.

This catalog uses two special reference number formats, one to indicate parts in a service assembly and another to indicate the quantity of a given part in an illustration.

**Service Assembly Reference Numbers**

Parts in service assemblies have reference numbers in the form a:b. The a represents the reference number of the entire service assembly and the b represents a sequential number unique to each part within the service assembly.

For example, a wheel assembly might be identified by reference number 6, the tire by 6:1, the valve by 6:2, and the wheel by 6:3. When you order the assembly identified by reference number 6, you receive all parts identified by reference numbers 6:1,6:2, and 6:3. However, you may also order any part individually. Reference numbers of this type appear in illustration and in parts lists.

**Reference Numbers Indicating Quantity**

In an illustration, if a reference number indicates more than one part, the reference number has the form nX y. The n represents the quantity of the part, the X is the multiplication symbol, and the y represents the reference number.

For example, in an illustration, the reference number 2X 37 means that two of the parts identified by reference number 37 are indicated.

# List of Abbreviations

**AR:** as required

**ASM:** assembly

**BBC:** blade brake control

**BHTF:** button head thread forming

**CARR:** carriage

**CCW:** counter clockwise

**CW:** clockwise

**DEG:** degrees

**DPA:** Dual Point Adjustment

**ECM:** electronic control module

**EXT:** external

**FH:** flat head

**GA:** gauge

**HD:** heavy-duty

**HF:** hex flange

**HH:** hex head

**HHF:** hex head flange

**HHFTF:** hex head flange thread forming

**HJ:** hex jam

**HLH:** hex lag head

**HOC:** height-of-cut

**HSBH:** hex socket button head

**HSFH:** hex socket flat head

**HSH:** hex socket head

**HWH:** hex washer head

**HWHTF:** hex washer head thread forming

**HYD:** hydraulic

**LH:** left hand

**LPG:** Liquid Propane Gas

**NI:** nylon insert

**NPTF:** national pipe thread fine

**PFH:** phillips flat head

**PPH:** phillips pan head

**PPHTF:** phillips pan head thread forming

**PRH:** phillips round head

**PTH:** phillips truss head

**PTO:** power-take-off

**RH:** right hand

**ROPS:** roll-over protection system

**RRB:** rear roller brush

**SFH:** slotted fillister head

**SHH:** slotted hex head

**SHWH:** slotted hex washer head

**SPH:** slotted pan head

**SQH:** square head

**SRH:** slotted round head

**STD:** standard

**TAP:** self tapping

**TTH:** torx truss head

# Contents

Frame and Console Assembly . . . . . 4
Steering Assembly . . . . . 5
Steering Valve Assembly No. 108-2924 . . . . . 6
Hydraulic Cylinder Assembly No. 114-0620 . . . . . 7
Fuel Tank and Battery Assembly . . . . . 8
Front Wheel Assembly . . . . . 10
Hydraulic Motor Assembly No. 108-2948 . . . . . 12
Rear Wheel Assembly . . . . . 13
Hydraulic Motor Assembly No. 108-2949 . . . . . 14
Hydraulic Motor Assembly No. 108-2947 . . . . . 15
Traction Pedal Assembly . . . . . 16
Pump Control Lever Assembly . . . . . 17
Engine Installation Assembly . . . . . 18
Pump and Coupling Assembly . . . . . 19
Variable Piston Pump Assembly No. 114-0612 . . . . . 20
Hydraulic Tank, Filter and Cooler Assembly . . . . . 22
Lift Valve and Rear Tube Assembly . . . . . 24
Valve Assembly No. 43-1710 . . . . . 26
Seat and Shroud Assembly . . . . . 27
Wire Harness, Air Cleaner and Hose Assembly . . . . . 28
Air Cleaner Assembly No. 93-2190 . . . . . 29
Rear Hitch Assembly . . . . . 30
Hydraulic Lift Cylinder Assembly No. 115-5647 . . . . . 31
Attachments and Accessories . . . . . 32

**© 2012—The Toro® Company**
**8111 Lyndale Avenue South**
**Bloomington, MN 55420**



**Contact us at www.Toro.com.**
**Printed in the USA.**
**All Rights Reserved**

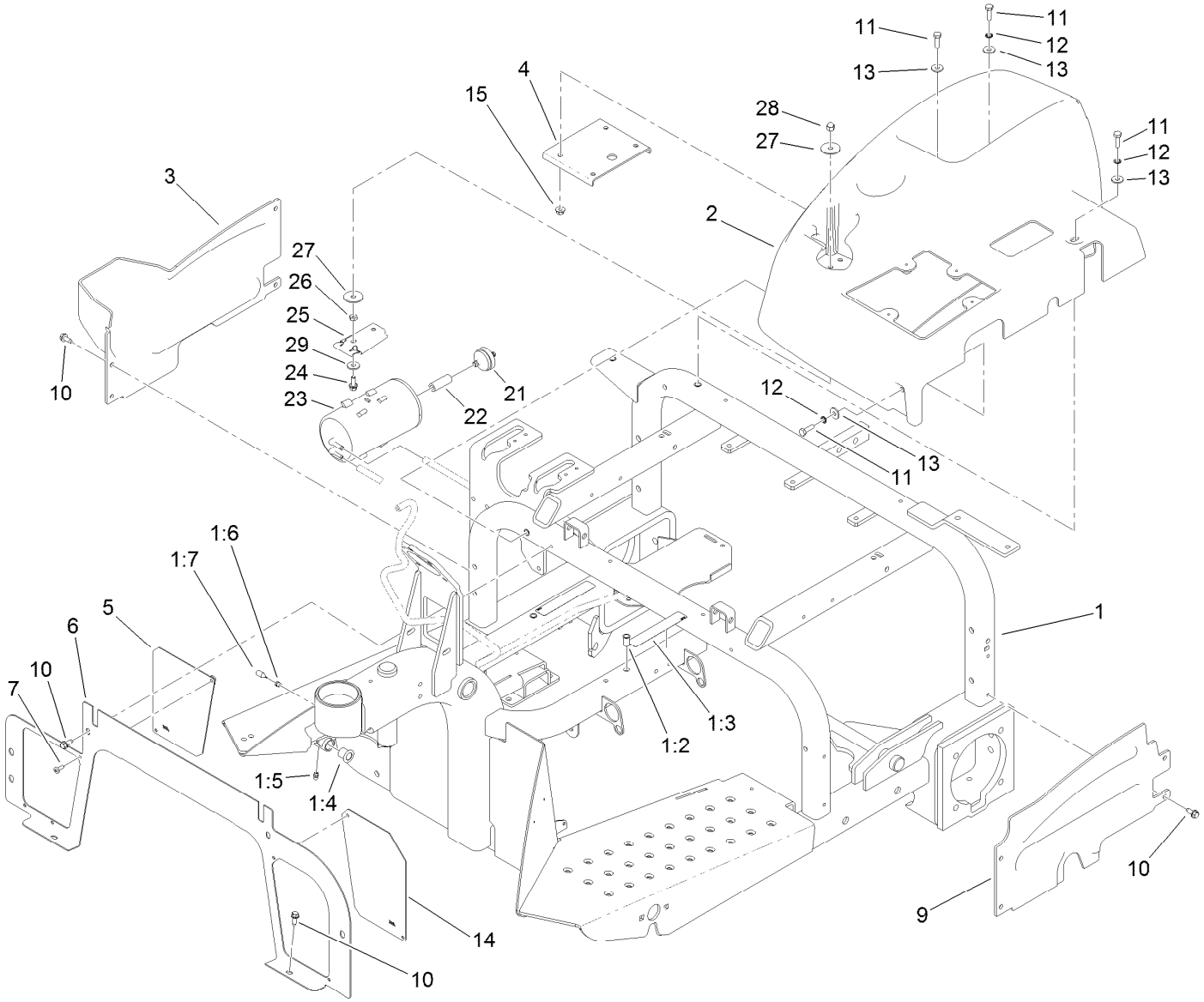


# Frame and Console Assembly

| Ref. | Part Number | Qty. | Description |
|---|---|---|---|
| 1 | 110-3367 | 1 | Frame ASM |
| 1:2 | 32148-11 | 5 | Insert-Threaded |
| 1:3 | 93-7272 | 2 | Decal-Warning |
| 1:4 | 256-219 | 2 | Bushing |
| 1:5 | 302-58 | 1 | Fitting-Straight |
| 1:6 | 107-1997 | 1 | Fitting-Grease |
| 1:7 | 107-1998 | 1 | Nozzle-Grease |
| 2 | 108-2936 | 1 | Console |
| 3 | 108-6855 | 1 | Shroud-Wheel, RH |
| 4 | 108-7995-03 | 1 | Plate-Support, Console |
| 5 | 120-3492-01 | 1 | Screen-Panel, RH |
| 6 | 112-1443-01 | 1 | Panel-Front |
| 7 | 3250-14 | 4 | Screw-PPH |
| 9 | 108-6856 | 1 | Shroud-Wheel, LH |
| 10 | 32144-10 | 12 | Screw-HWH |

| Ref. | Part Number | Qty. | Description |
|---|---|---|---|
| 11 | 321-5 | 7 | Screw-HH |
| 12 | 3254-8 | 3 | Washer-Lock |
| 13 | 3256-78 | 7 | Washer-Flat |
| 14 | 120-3491-01 | 1 | Screen-Panel, LH |
| 15 | 32128-33 | 4 | Nut-HF |
| 21 | 115-7854 | 1 | Filter-Fuel, Inline |
| 22 | 106-5317 | 1 | Hose-Fuel |
| 23 | 115-2251 | 1 | Canister-Carbon |
| 24 | 3234-33 | 1 | Screw-HHF |
| 25 | 114-0292 | 1 | Bracket-Canister, Carbon |
| 26 | 3218-1 | 1 | Nut-Jam |
| 27 | 3256-57 | 2 | Washer-Flat |
| 28 | 32111-7 | 1 | Nut-Cap |
| 29 | 3256-78 | 1 | Washer-Flat |

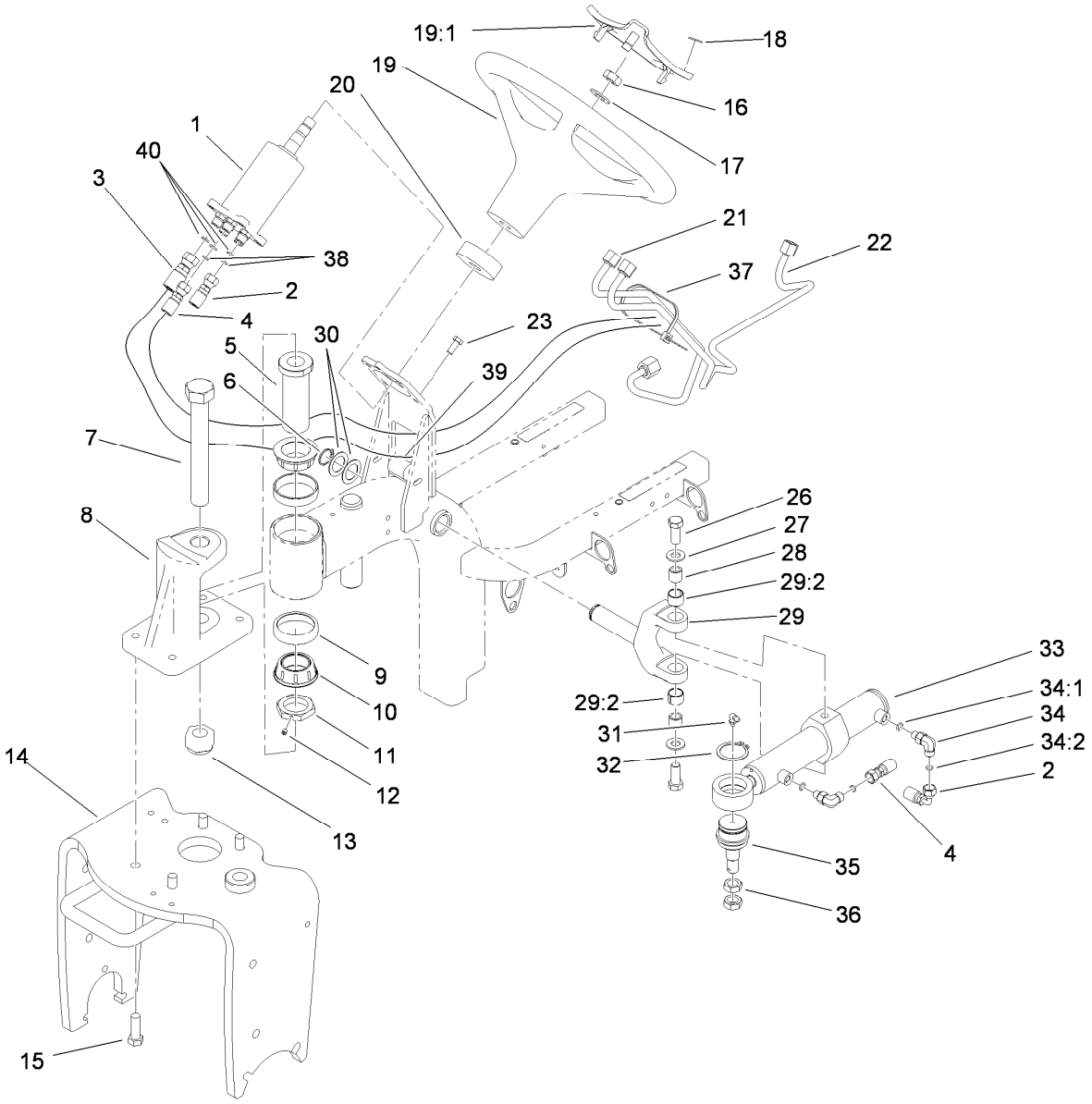


# Steering Assembly

| Ref. | Part Number | Qty. | Description |
|---|---|---|---|
| 1 | 108-2924 | 1 | Valve-Steering |
| 2 | 105-4347 | 1 | HYD Hose ASM |
| 3 | 93-5385 | 1 | Hose ASM |
| 4 | 108-6508 | 1 | HYD Hose ASM |
| 5 | 108-8470 | 1 | Sleeve-Steering |
| 6 | 32151-36 | 1 | Ring-Retaining |
| 7 | 3216-16 | 1 | Screw-HH |
| 8 | 108-5431 | 1 | Pivot-Steering |
| 9 | 107-7590 | 2 | Cup-Bearing |
| 10 | 107-7589 | 2 | Cone-Bearing (W/ Seal) |
| 11 | 108-8471 | 1 | Nut-Steering |
| 12 | 3245-1 | 1 | Screw-Set, HSH |
| 13 | 104-2024 | 1 | Nut-Hex, NI |
| 14 | 108-0573-01 | 1 | Castor Fork ASM |
| 15 | 325-6 | 4 | Screw-HH |
| 16 | 3296-33 | 1 | Nut-Lock, NI |
| 17 | 3256-27 | 1 | Washer-Flat |
| 18 | 98-1459 | 1 | Decal |
| 19 | 98-1471 | 1 | Wheel-Steering |
| 19:1 | 98-1468 | 1 | Cover-Wheel, Steering |
| 20 | 108-7998 | 1 | Collar-Foam |

| Ref. | Part Number | Qty. | Description |
|---|---|---|---|
| 21 | 108-8414 | 1 | Tube ASM |
| 22 | 108-8415 | 1 | Tube ASM |
| 23 | 33114-020 | 4 | Screw-HH |
| 26 | 94-7976 | 2 | Screw-HH |
| 27 | 3256-26 | 2 | Washer-Flat |
| 28 | 108-8483 | 2 | Spacer-Plain |
| 29 | 108-8481 | 1 | Yoke And Bushing ASM |
| 29:2 | 108-8482 | 2 | Bushing-Sleeve |
| 30 | 1-543436 | 2 | Washer-Spacer |
| 31 | 302-40 | 1 | Fitting-Grease |
| 32 | 32151-104 | 1 | Ring-Retaining, External |
| 33 | 114-0620 | 1 | Hydraulic Cylinder ASM |
| 34 | 340-132 | 2 | Fitting-HYD, 90 DEG |
| 34:1 | 237-78 | 1 | O-Ring |
| 34:2 | 237-21 | 1 | O-Ring |
| 35 | 106-6774 | 1 | Joint-Ball |
| 36 | 3220-6 | 2 | Nut-Jam |
| 37 | 3290-379 | 1 | Tie-Cable |
| 38 | 237-21 | 2 | O-Ring |
| 39 | 38-3400 | 2 | Guard-Rubber |
| 40 | 237-22 | 3 | O-Ring |

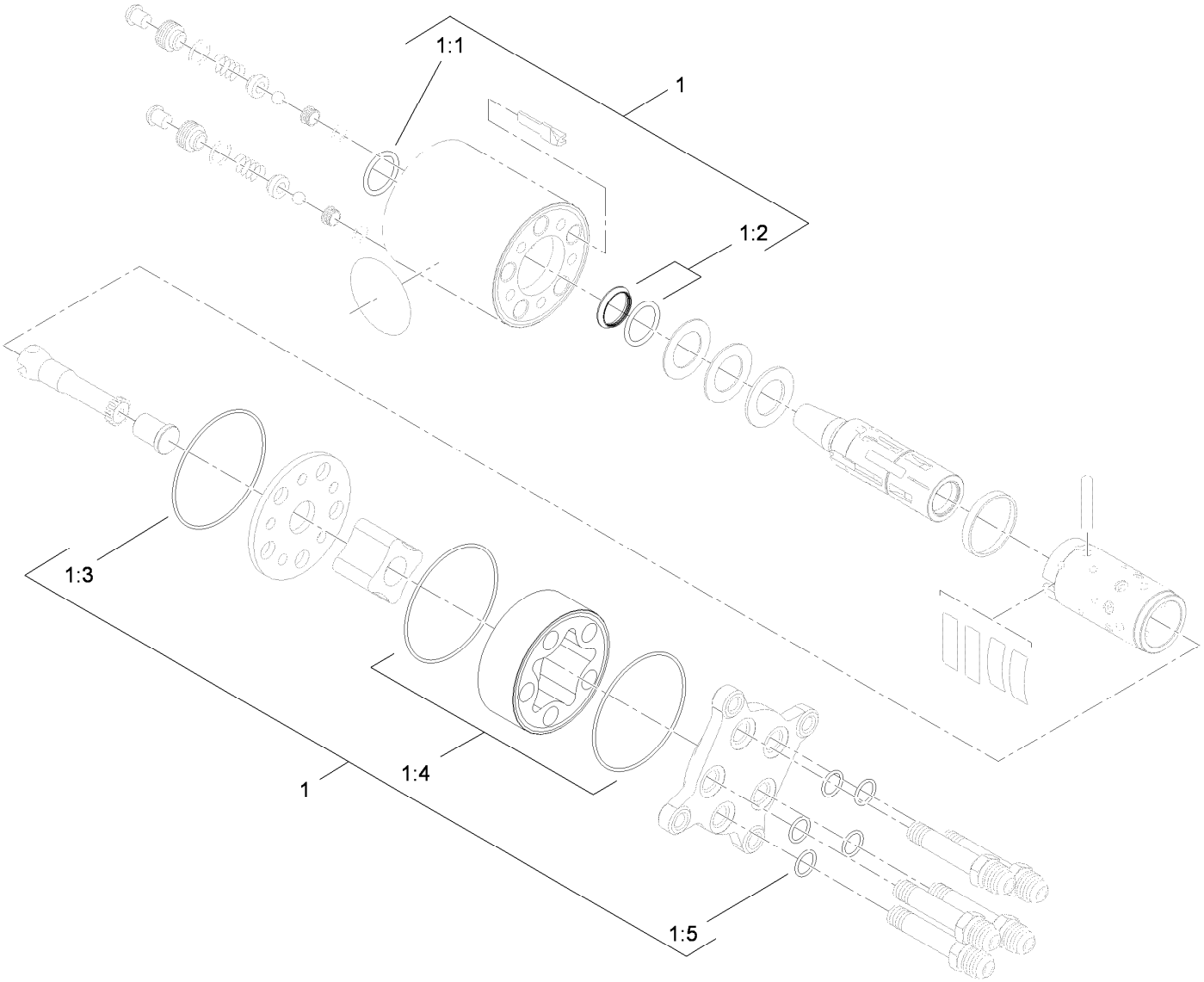


# Steering Valve Assembly No. 108-2924

| *Ref.* | *Part Number* | *Qty.* | *Description* |
|---|---|---|---|
| 1 | 106-6716 | 1 | Seal Kit |
| 1:1 | | 1 | Ring-Seal, Dust ● |
| 1:2 | | 1 | Seal-Shaft ● |
| 1:3 | | 1 | O-Ring ● |
| 1:4 | | 2 | O-Ring ● |
| 1:5 | | 5 | O-Ring ● |

● Not serviced separately

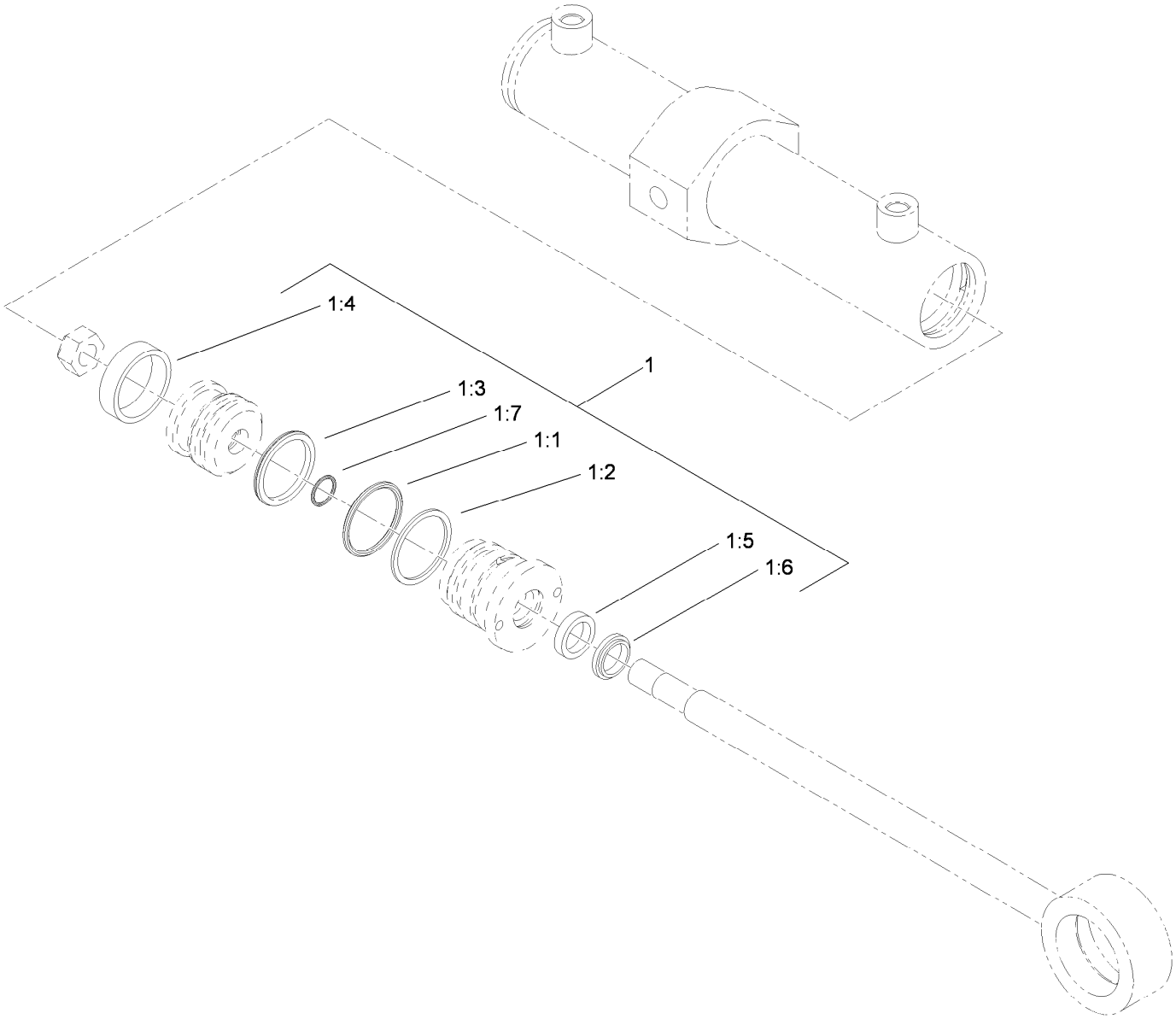


# Hydraulic Cylinder Assembly No. 114-0620

| *Ref.* | *Part Number* | *Qty.* | *Description* |
|---|---|---|---|
| 1 | 114-0622 | 1 | Seal Kit |
| 1:1 | | 1 | O-Ring ● |
| 1:2 | | 1 | Backup ● |
| 1:3 | | 1 | Bp Seal ● |
| 1:4 | | 1 | Wear Ring ● |
| 1:5 | | 1 | Bs Seal ● |
| 1:6 | | 1 | Dust Seal ● |
| 1:7 | | 1 | O-Ring ● |

● Not serviced separately

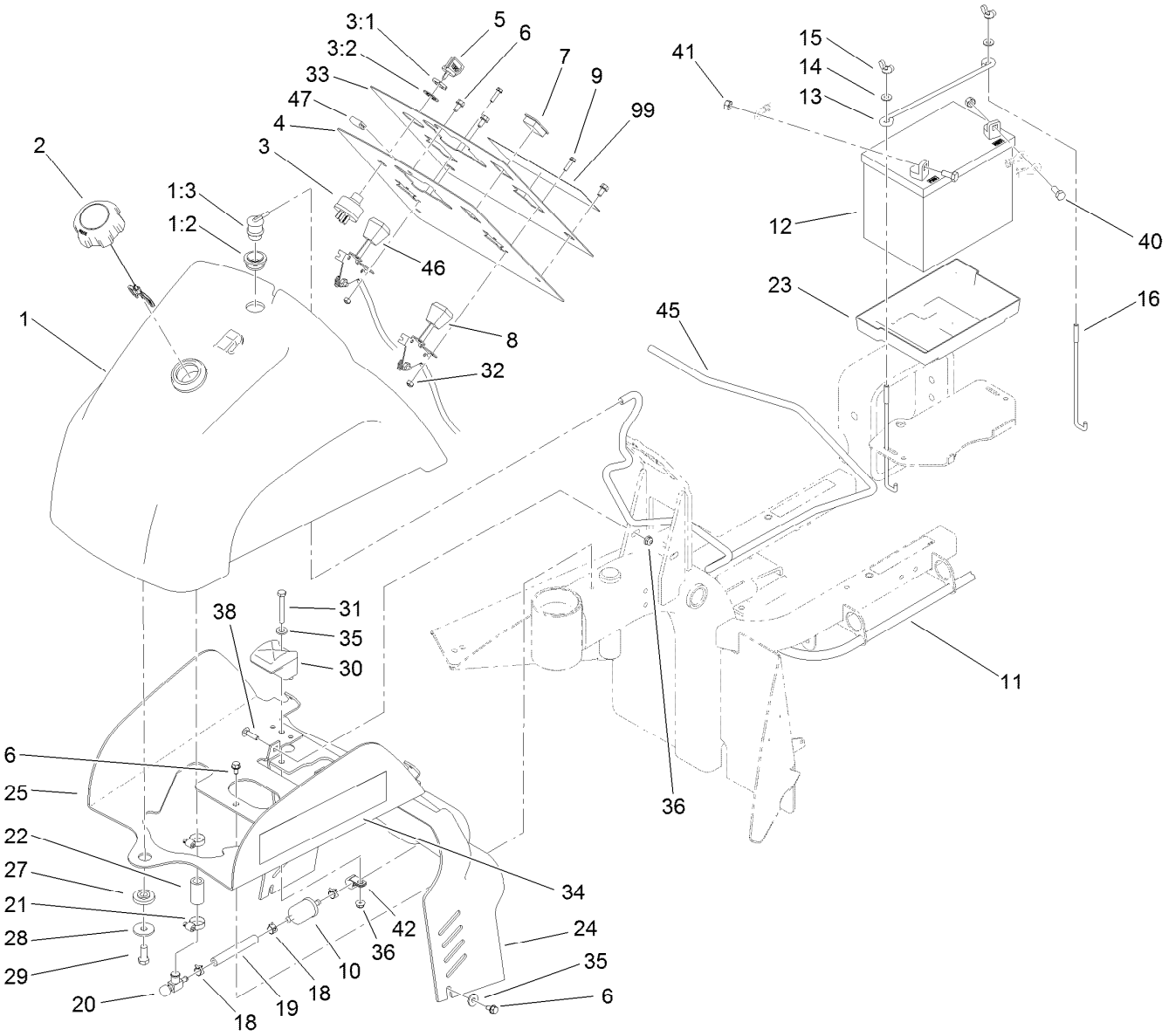


# Fuel Tank and Battery Assembly

| Ref. | Part Number | Qty. | Description |
|---|---|---|---|
| 1 | 119-2496 | 1 | Fuel Tank ASM |
| 1:2 | 114-0284 | 1 | Grommet |
| 1:3 | 114-0285 | 1 | Valve-Rollover |
| 2 | 115-7788 | 1 | Cap-Fuel |
| 3 | 83-0020 | 1 | Switch-Ignition |
| 3:1 | 218-461 | 1 | Nut-HH |
| 3:2 | 3254-5 | 1 | Washer-Tooth, Internal |
| 4 | 108-6896-03 | 1 | Panel-Dash |
| 5 | 63-8360 | 2 | Key-Ignition (W/Shield) |
| 6 | 32144-10 | 6 | Screw-HWH |
| 7 | 99-7420 | 1 | Plug-Hole |
| 8 | 119-7188 | 1 | Throttle Cable ASM |
| 9 | 3290-321 | 4 | Screw-HWH |
| 10 | 94-2690 | 1 | Filter-Fuel |
| 11 | 110-3372 | 1 | Hose-Fuel |
| 12 | 104-8162 | 1 | Battery |
| 13 | 100-6434 | 1 | Rod-Hold Down, Battery |
| 14 | 3256-22 | 2 | Washer-Flat |
| 15 | 32103-22 | 2 | Nut-Wing |
| 16 | 100-6435 | 2 | Post-Battery |
| 18 | 2412-98 | 4 | Clamp-Hose |

| Ref. | Part Number | Qty. | Description |
|---|---|---|---|
| 19 | 109-0660 | 1 | Hose-Fuel |
| 20 | 83-1390 | 1 | Valve-Shut-Off, Fuel |
| 21 | 2412-36 | 2 | Clamp-Hose |
| 22 | 110-3371 | 1 | Hose-Fuel |
| 23 | 106948 | 1 | Tray-Battery |
| 24 | 108-6898 | 1 | Shroud-Dash |
| 25 | 108-6895-01 | 1 | Bracket-Mount, Tank |
| 27 | 240-11 | 1 | Bushing-Flange |
| 28 | 63-8410 | 1 | Washer |
| 29 | 323-5 | 1 | Screw-HH |
| 30 | 107-4543 | 2 | Clamp |
| 31 | 321-18 | 2 | Screw-HH |
| 32 | 3296-2 | 4 | Nut-Lock, NI |
| 33 | 119-2483 | 1 | Decal-Dash |
| 34 | 108-8419 | 2 | Decal |
| 35 | 3256-78 | 4 | Washer-Flat |
| 36 | 104-7201 | 4 | Nut-HF |
| 38 | 3229-1 | 2 | Bolt-CARR |
| 40 | 322-3 | 2 | Screw-HH |
| 41 | 3217-6 | 2 | Nut-Hex |
| 42 | 92-6064 | 1 | Clamp-R |

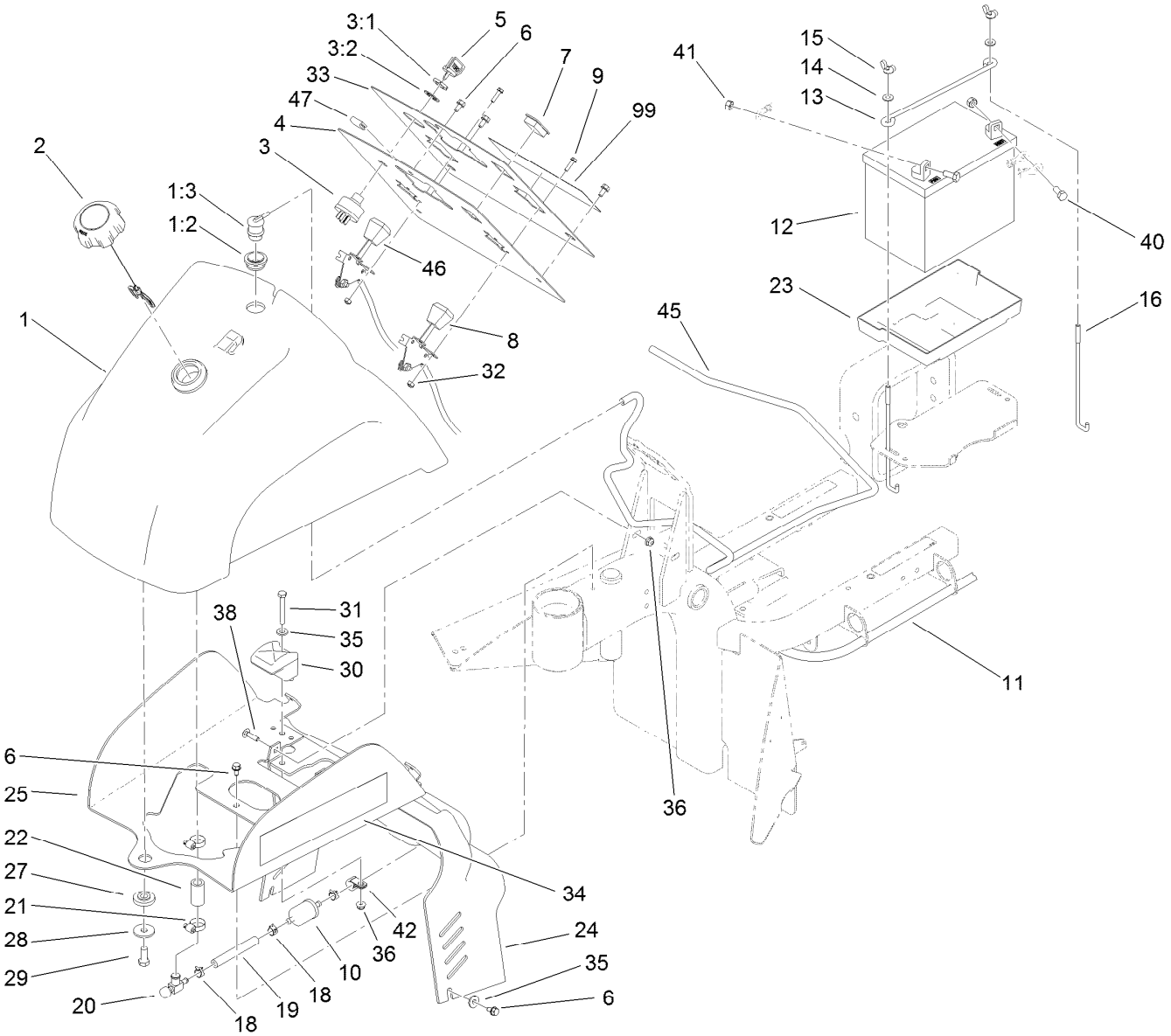


# Fuel Tank and Battery Assembly (continued)

| Ref. | Part Number | Qty. | Description |
|---|---|---|---|
| 45 | 117-9568 | 1 | Hose-Vent, Tank |
| 46 | 119-7178 | 1 | Choke Cable ASM |
| 47 | 119-2494 | 1 | Seal-Strip |
| 99 | 119-2484 | 1 | Decal-Dash, Ce |

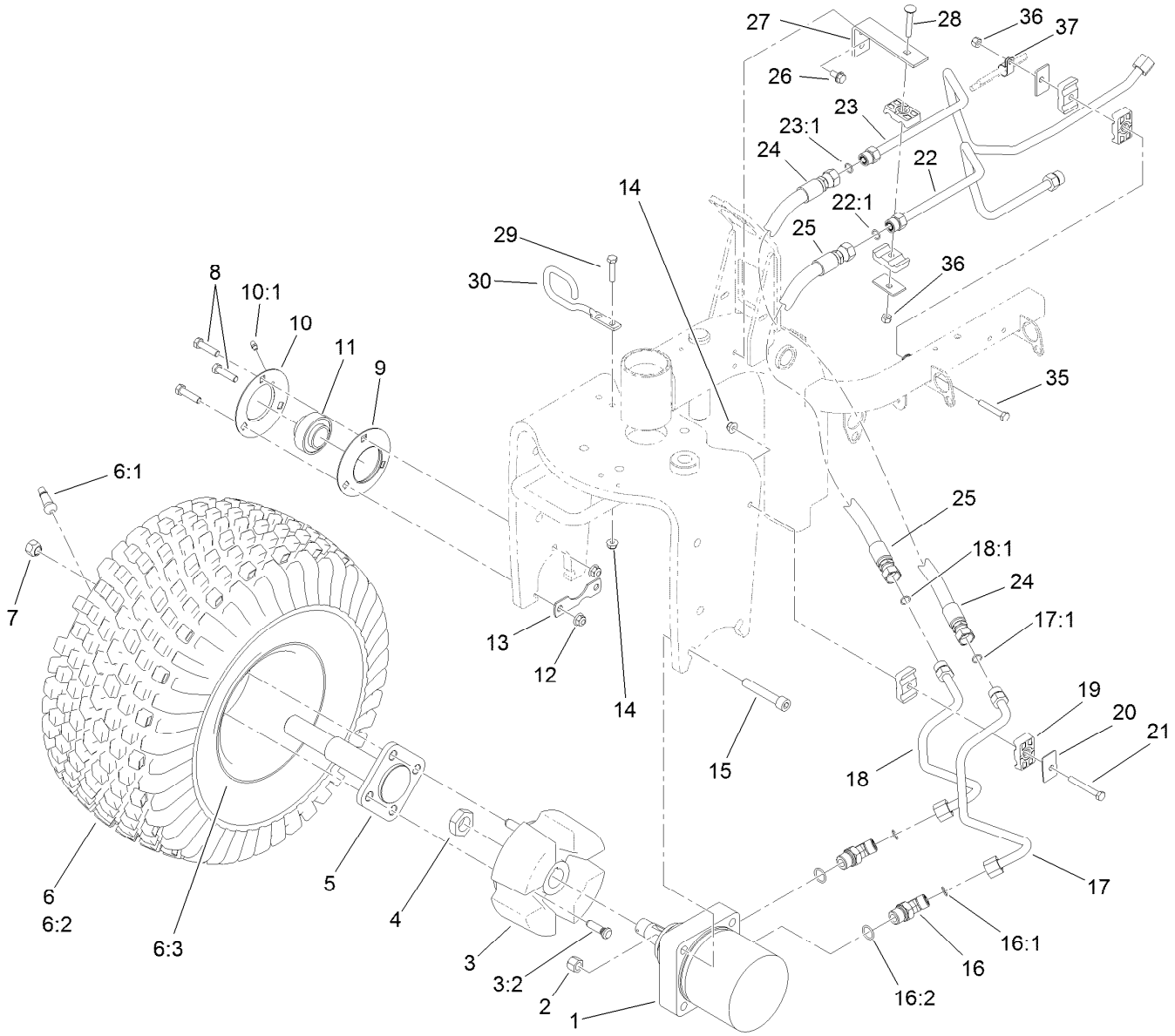


# Front Wheel Assembly

| Ref. | Part Number | Qty. | Description |
|---|---|---|---|
| 1 | 108-2948 | 1 | HYD Motor ASM (CW) |
| 2 | 3296-23 | 2 | Nut-Lock, NI |
| 3 | 110-6310 | 1 | Front Wheel Hub ASM |
| 3:2 | 10-6830 | 4 | Stud-Type, Drive |
| 4 | 26-3790 | 1 | Nut-Lock |
| 5 | 110-6314 | 1 | Spindle |
| 6 | 95-0621 | 1 | Wheel And Tire ASM |
| 6:1 | 5108 | 1 | Valve |
| 6:2 | 85-8290 | 1 | Tire-2Ply, Knobby |
| 6:3 | 94-6116 | 1 | Wheel-Rear |
| 7 | 242-50 | 4 | Nut-Lug |
| 8 | 323-8 | 3 | Screw-HH |
| 9 | 85-8950 | 1 | Flangette-Standard |
| 10 | 85-8940 | 1 | Flangette-Relube |
| 10:1 | 302-5 | 1 | Fitting-Grease |
| 11 | 251-352 | 1 | Bearing |
| 12 | 104-8301 | 3 | Nut-Flange, NI |
| 13 | 88-8350 | 1 | Tab-Bearing |
| 14 | 104-8300 | 3 | Nut-Flange, NI |
| 15 | 3274-74 | 2 | Screw-HSH |
| 16 | 340-89 | 2 | Fitting-HYD, 45 DEG |

| Ref. | Part Number | Qty. | Description |
|---|---|---|---|
| 16:1 | 237-30 | 1 | O-Ring |
| 16:2 | 237-80 | 1 | O-Ring |
| 17 | 108-8432 | 1 | Tube ASM |
| 17:1 | 237-30 | 1 | O-Ring |
| 18 | 108-8431 | 1 | Tube ASM |
| 18:1 | 237-30 | 1 | O-Ring |
| 19 | 56-7976 | 6 | Clamp-Tube |
| 20 | 69-9760 | 3 | Coverplate |
| 21 | 322-12 | 1 | Screw-HH |
| 22 | 108-8411 | 1 | Tube ASM |
| 22:1 | 237-30 | 2 | O-Ring |
| 23 | 108-8409 | 1 | Tube ASM |
| 23:1 | 237-30 | 1 | O-Ring |
| 24 | 108-8433 | 1 | HYD Hose ASM |
| 25 | 110-6303 | 1 | HYD Hose ASM |
| 26 | 32144-14 | 2 | Screw-HWHTF |
| 27 | 108-8455-01 | 1 | Bracket-Clamp |
| 28 | 3230-6 | 1 | Screw-CARR |
| 29 | 322-7 | 2 | Screw-HH |
| 30 | 108-8435 | 1 | Guide-Hose |
| 35 | 322-10 | 1 | Screw-HH |

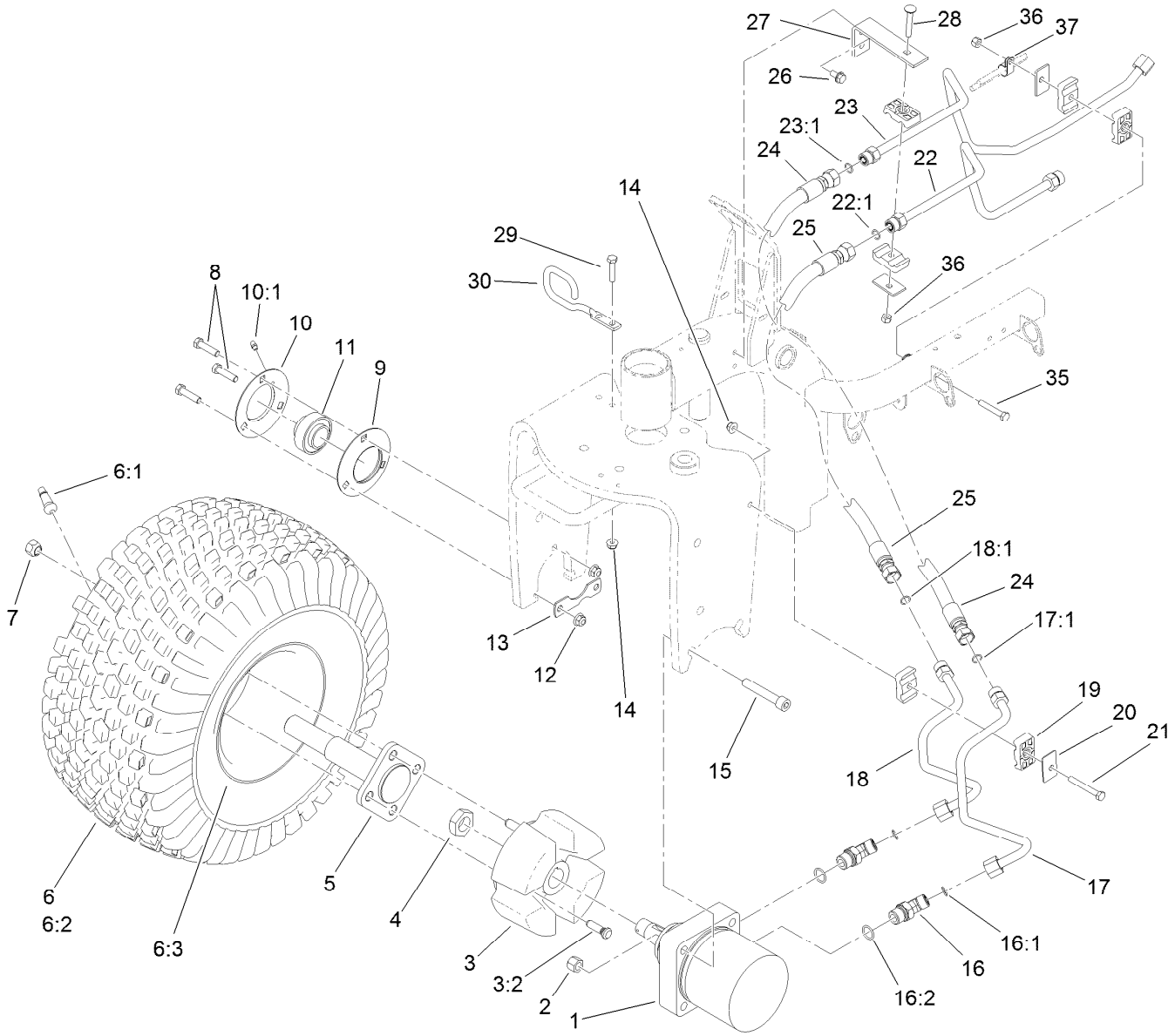


# Front Wheel Assembly (continued)

| Ref. | Part Number | Qty. | Description |
|---|---|---|---|
| 36 | 3296-29 | 2 | Nut-Lock, NI |
| 37 | 2412-41 | 1 | Clamp |

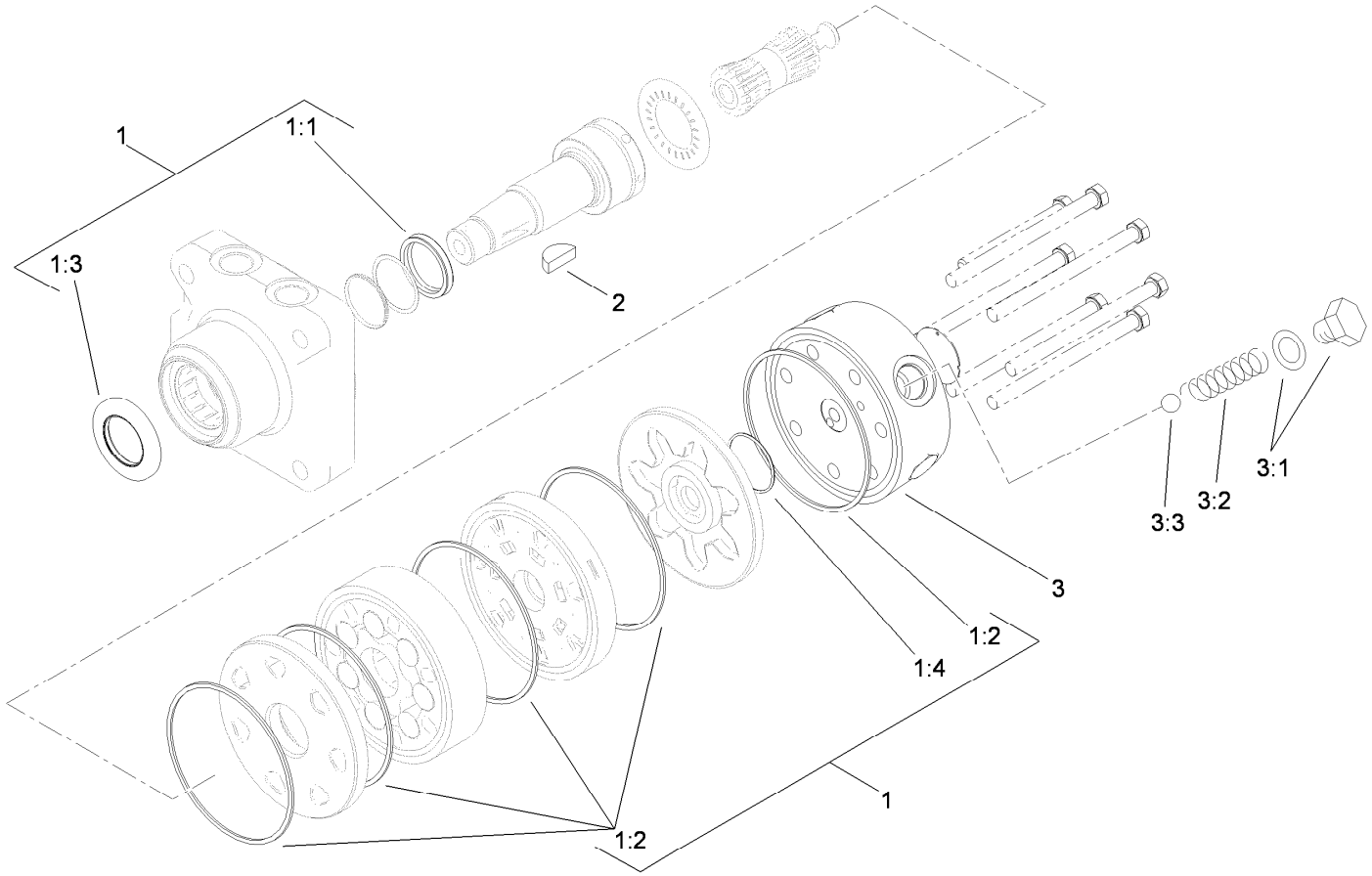


# Hydraulic Motor Assembly No. 108-2948

| *Ref.* | *Part Number* | *Qty.* | *Description* |
|---|---|---|---|
| 1 | 110-6459 | 1 | Seal Kit |
| 1:1 | | 1 | Seal-Shaft ● |
| 1:2 | | 5 | Seal-Body ● |
| 1:3 | | 1 | Seal-Dirt / Water ● |
| 1:4 | | 1 | Seal-Commutator ● |
| 2 | 3257-42 | 1 | Key-Woodruff |
| 3 | 99-3538 | 1 | End Cover ASM |
| 3:1 | | 1 | Spring Cap And O-Ring ASM ● |
| 3:2 | 99-3541 | 1 | Spring |
| 3:3 | 99-3540 | 1 | Ball |

● Not serviced separately

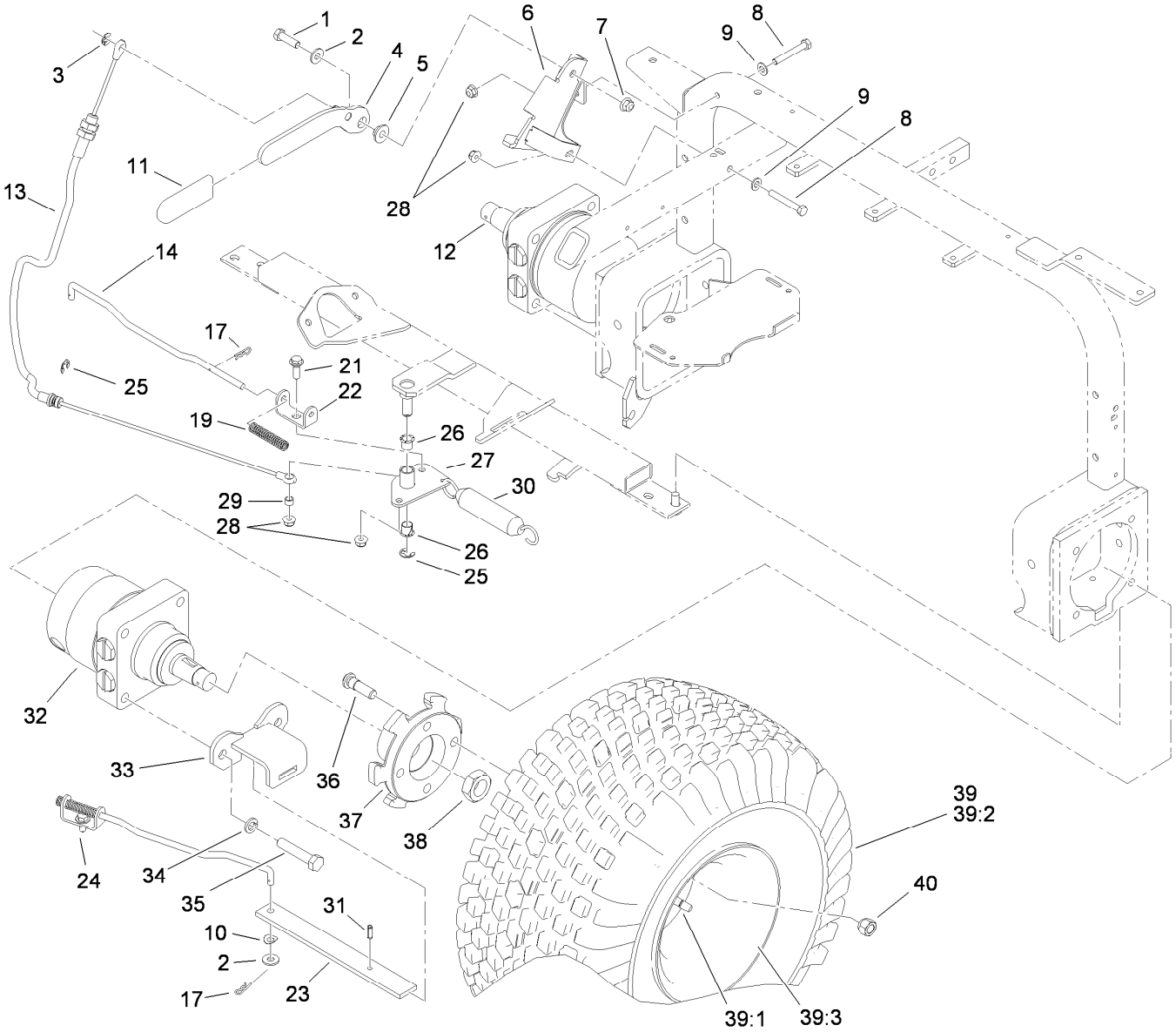


# Rear Wheel Assembly

| Ref. | Part Number | Qty. | Description |
|---|---|---|---|
| 1 | 323-7 | 1 | Screw-HH |
| 2 | 3256-3 | 3 | Washer-Flat |
| 3 | 32151-47 | 1 | Ring-Retaining |
| 4 | 108-7991-03 | 1 | Brake Lever ASM |
| 5 | 108-7994 | 1 | Bushing-Pivot, Lever |
| 6 | 121-2520 | 1 | Brake Lever Bracket ASM |
| 7 | 104-8301 | 1 | Nut-Flange, NI |
| 8 | 322-11 | 2 | Screw-HH |
| 9 | 3256-23 | 2 | Washer-Flat |
| 10 | 3290-301 | 2 | Washer-Spring |
| 11 | 21-1880 | 1 | Grip-Handle |
| 12 | 108-2949 | 1 | HYD Motor ASM (CW) |
| 13 | 108-7913 | 1 | Cable-Brake, Park |
| 14 | 108-7987 | 2 | Link-Latch, Parking |
| 17 | 3290-307 | 4 | Pin-Hair |
| 19 | 107-3376 | 2 | Spring-Compression |
| 21 | 19-1471 | 1 | Screw-Shoulder |
| 22 | 114-0631 | 2 | Clevis-Latch, Parking |
| 23 | 108-7986-03 | 2 | Bar-Brake |
| 24 | 19-1470 | 1 | Screw-Shoulder |

| Ref. | Part Number | Qty. | Description |
|---|---|---|---|
| 25 | 32120-47 | 2 | Ring-Retaining, External |
| 26 | 256-257 | 2 | Bushing-Nyliner |
| 27 | 108-7979-03 | 1 | Bellcrank ASM |
| 28 | 104-8300 | 4 | Nut-Flange, NI |
| 29 | 108-7983 | 1 | Bushing-Cable |
| 30 | 66-4270 | 1 | Spring-Extension |
| 31 | 32121-11 | 2 | Pin-Roll |
| 32 | 108-2947 | 1 | HYD Motor ASM (CCW) |
| 33 | 108-7973-03 | 2 | Brake Bracket ASM |
| 34 | 3253-7 | 8 | Washer-Lock |
| 35 | 325-10 | 8 | Screw-HH |
| 36 | 85-6540 | 8 | Stud-Drive |
| 37 | 108-7977-03 | 2 | Hub-Wheel |
| 38 | 26-3790 | 2 | Nut-Lock |
| 39 | 95-0621 | 2 | Wheel And Tire ASM |
| 39:1 | 5108 | 1 | Valve |
| 39:2 | 85-8290 | 1 | Tire-2Ply, Knobby |
| 39:3 | 94-6116 | 1 | Wheel-Rear |
| 40 | 242-50 | 8 | Nut-Lug |

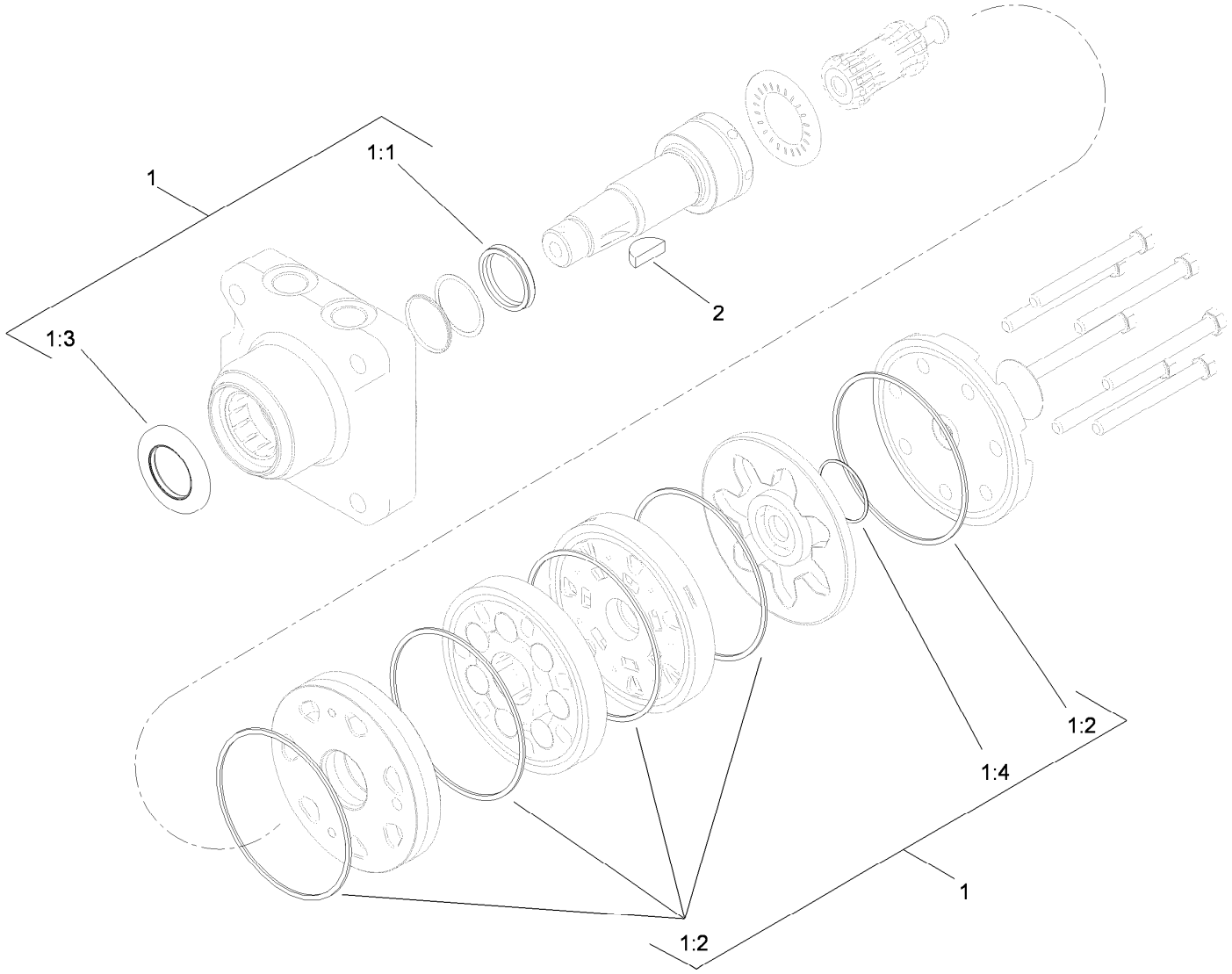


# Hydraulic Motor Assembly No. 108-2949

| *Ref.* | *Part Number* | *Qty.* | *Description* |
|---|---|---|---|
| 1 | 110-6459 | 1 | Seal Kit |
| 1:1 | | 1 | Seal-Shaft ● |
| 1:2 | | 5 | Seal-Body ● |
| 1:3 | | 1 | Seal-Dirt / Water ● |
| 1:4 | | 1 | Seal-Commutator ● |
| 2 | 3257-42 | 1 | Key-Woodruff |

● Not serviced separately

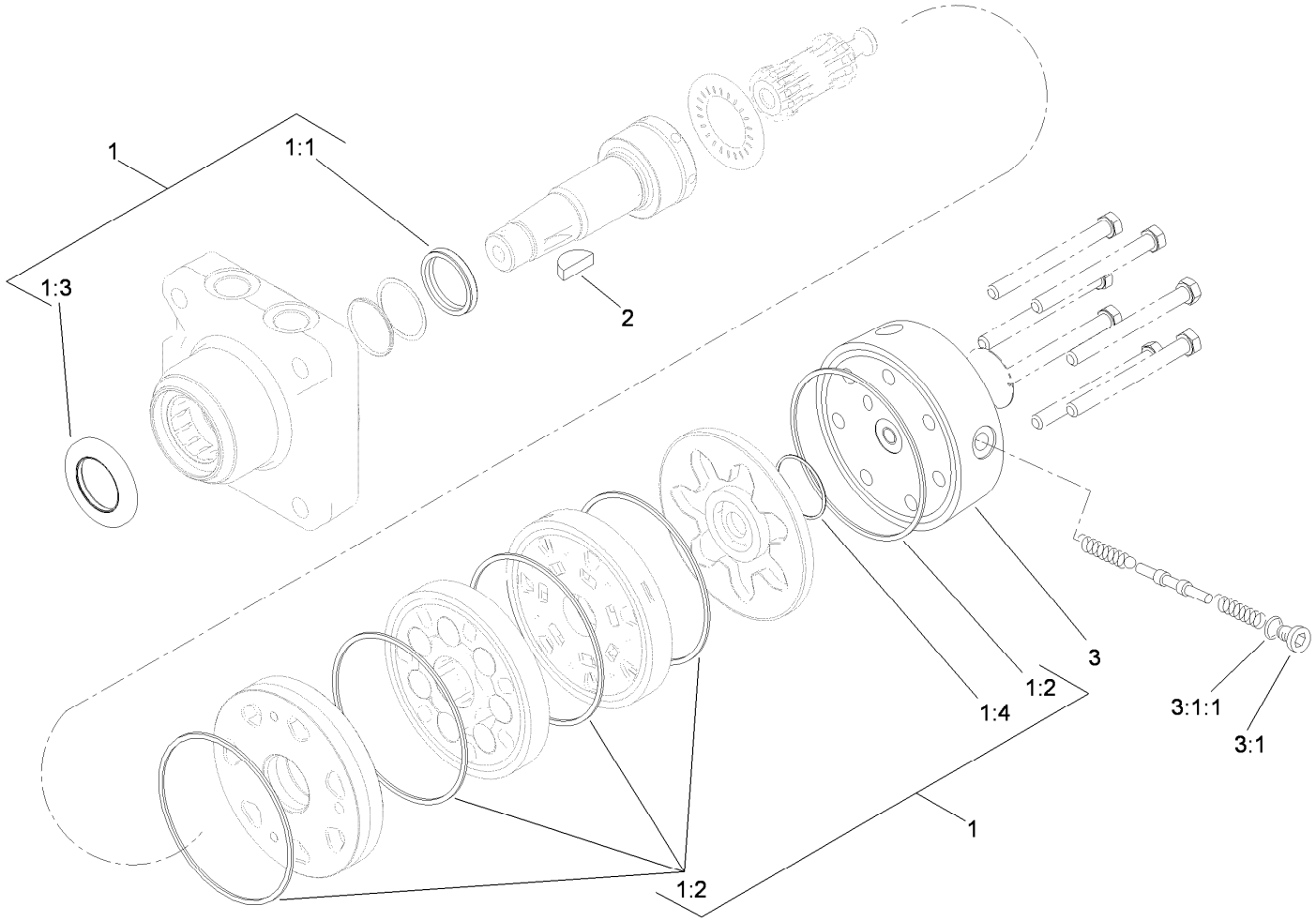


# Hydraulic Motor Assembly No. 108-2947

| *Ref.* | *Part Number* | *Qty.* | *Description* |
|---|---|---|---|
| 1 | 110-6459 | 1 | Seal Kit |
| 1:1 | | 1 | Seal-Shaft ● |
| 1:2 | | 5 | Seal-Body ● |
| 1:3 | | 1 | Seal-Dirt / Water ● |
| 1:4 | | 1 | Seal-Commutator ● |
| 2 | 3257-42 | 1 | Key-Woodruff |
| 3 | 110-3381 | 1 | End Cover ASM |
| 3:1 | 353-990 | 1 | Plug |
| 3:1:1 | 237-78 | 1 | O-Ring |

● Not serviced separately

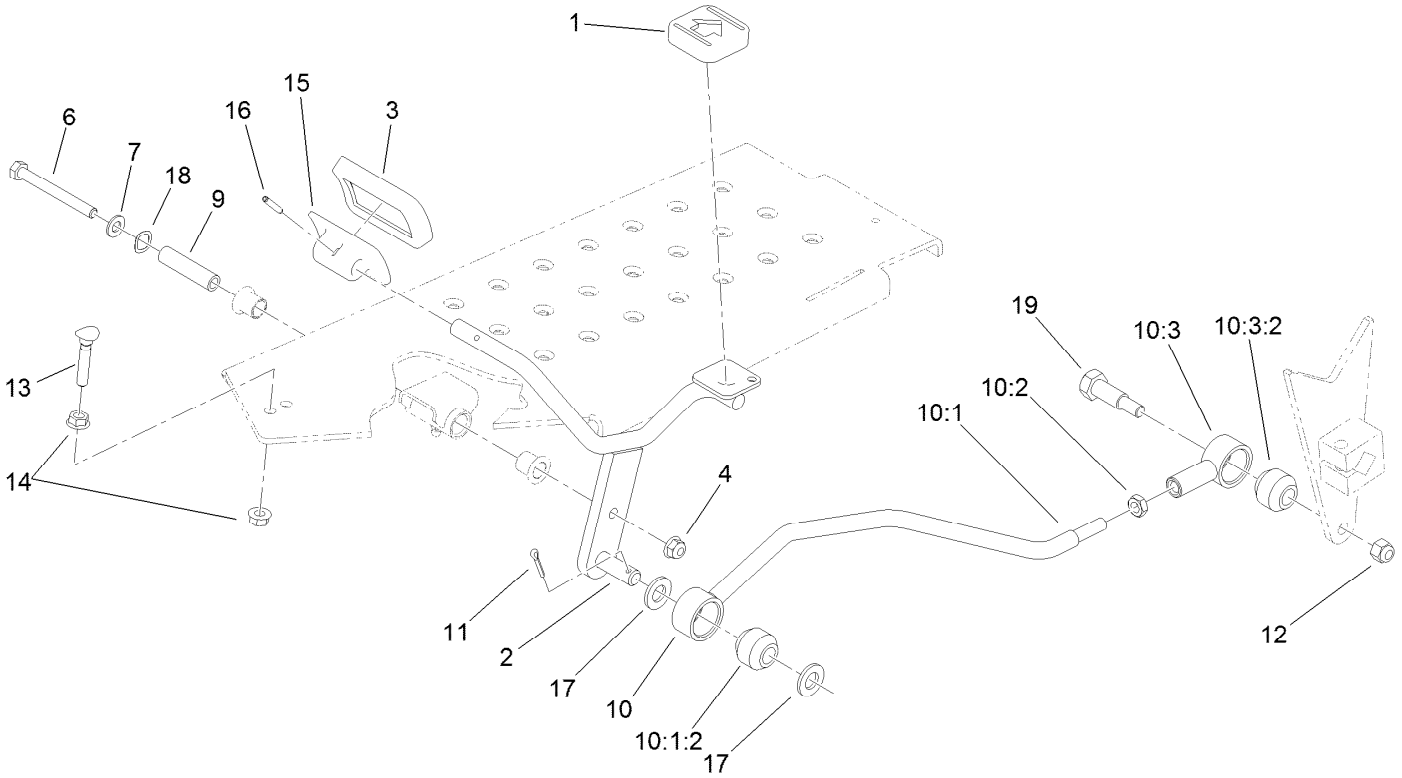


# Traction Pedal Assembly

| Ref. | Part Number | Qty. | Description |
|---|---|---|---|
| 1 | 74-9110 | 1 | Pad-Pedal, Reverse |
| 2 | 108-5498-01 | 1 | Pedal ASM |
| 3 | 74-9100 | 1 | Pad-Pedal, Forward |
| 4 | 104-8300 | 1 | Nut-Flange, NI |
| 6 | 322-14 | 1 | Screw-HH |
| 7 | 3256-23 | 1 | Washer-Flat |
| 9 | 85-8960 | 1 | Spacer |
| 10 | | 1 | Traction Rod ASM ● |
| 10:1 | 115-5626 | 1 | Rod ASM |
| 10:1:2 | 23-2270 | 1 | Bushing-Rubber |
| 10:2 | 3220-3 | 1 | Nut-HJ |

| Ref. | Part Number | Qty. | Description |
|---|---|---|---|
| 10:3 | 115-5623 | 1 | Isolated Rod End ASM |
| 10:3:2 | 23-2270 | 1 | Bushing-Rubber |
| 11 | 3272-10 | 1 | Pin-Cotter |
| 12 | 3296-39 | 1 | Nut-Lock, NI |
| 13 | 17-9420 | 1 | Screw-Handle |
| 14 | 32128-20 | 2 | Nut-HF |
| 15 | 117-9507 | 1 | Pedal-Accelerator |
| 16 | 32121-45 | 1 | Pin-Spring |
| 17 | 106-9888 | 2 | Washer-Flat |
| 18 | 108473 | 1 | Washer-Wave |
| 19 | 117-4698 | 1 | Screw-Shoulder, HH |

● Not serviced separately

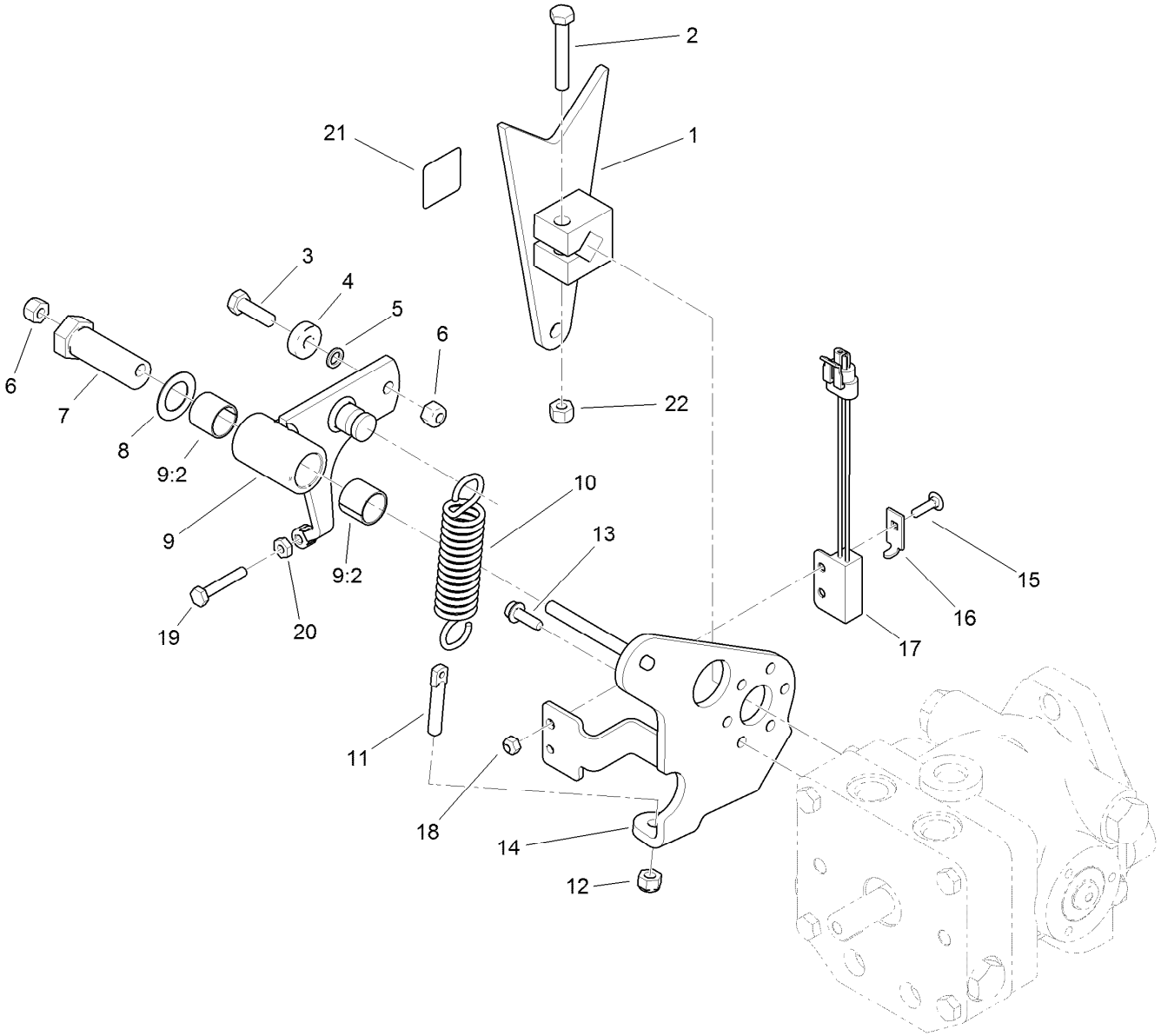


# Pump Control Lever Assembly

| Ref. | Part Number | Qty. | Description |
|---|---|---|---|
| 1 | 112-6458-03 | 1 | Pump Lever ASM |
| 2 | 323-11 | 1 | Screw-HH |
| 3 | 322-5 | 1 | Screw-HH |
| 4 | 251-307 | 1 | Bearing-Ball |
| 5 | 75-5470 | 1 | Spacer-Bearing |
| 6 | 3296-29 | 2 | Nut-Lock, NI |
| 7 | 76-8640 | 1 | Stud-Traction |
| 8 | 3-6498 | 1 | Washer-Thrust |
| 9 | 119-7196 | 1 | Arm ASM |
| 9:2 | 94-9609 | 2 | Bushing-Straight |
| 10 | 85-9030 | 1 | Spring-Extension |
| 11 | 18-6380 | 1 | Pin-Adjustment, Steering |

| Ref. | Part Number | Qty. | Description |
|---|---|---|---|
| 12 | 3296-4 | 1 | Nut-Lock |
| 13 | 49-2040 | 3 | Screw-HWHTF |
| 14 | 108-5490-03 | 1 | Pump Plate ASM |
| 15 | 3229-20 | 1 | Screw-CARR |
| 16 | 100-4872 | 1 | Plate-Switch, Neutral |
| 17 | 105-0023 | 1 | Switch-Proximity |
| 18 | 3296-2 | 1 | Nut-Lock, NI |
| 19 | 321-43 | 1 | Capscrew |
| 20 | 3218-1 | 1 | Nut-Jam |
| 21 | 93-9051 | 1 | Decal-Bolt, Eccentric |
| 22 | 3296-39 | 1 | Nut-Lock, NI |

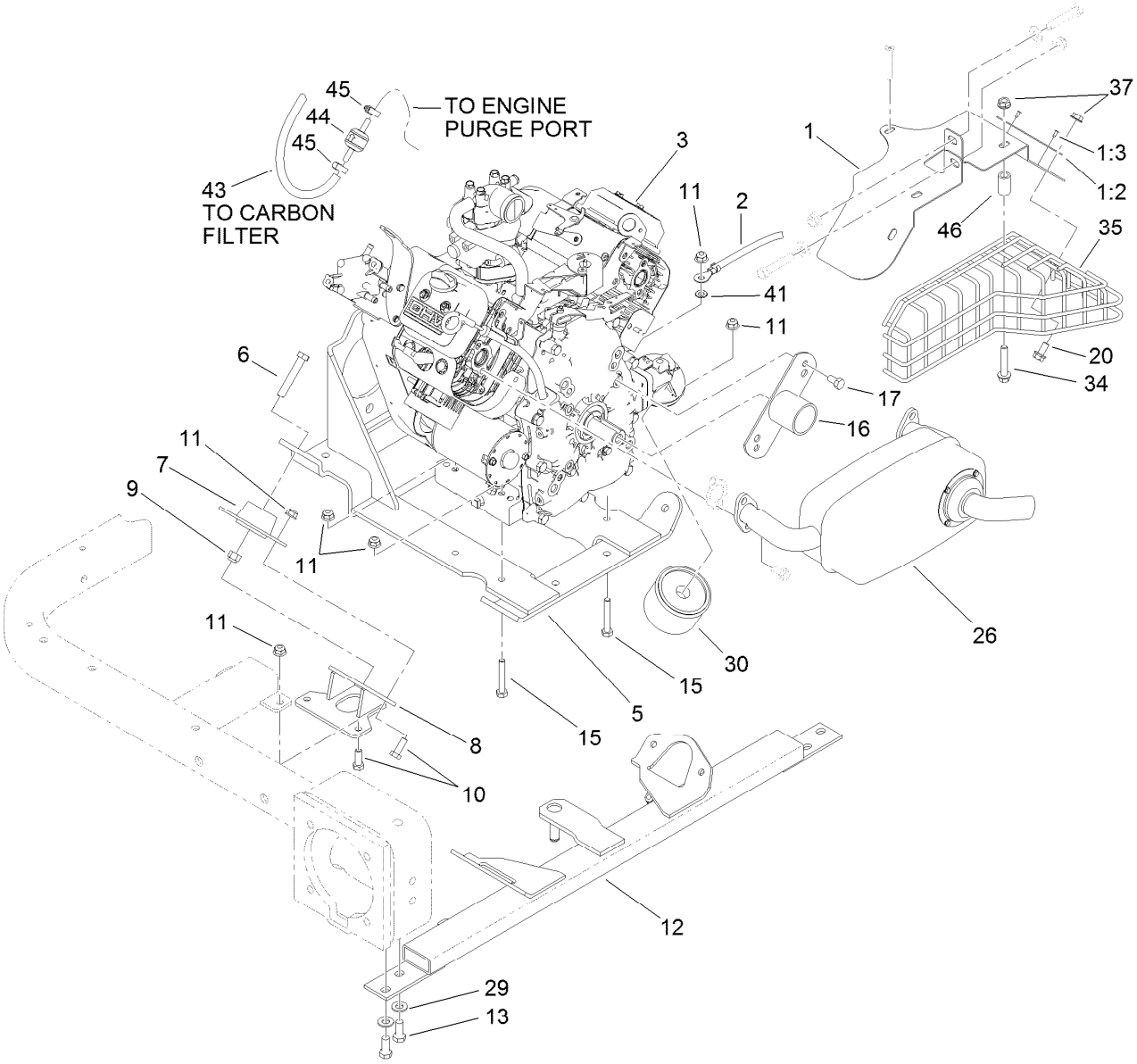


# Engine Installation Assembly

| Ref. | Part Number | Qty. | Description |
|---|---|---|---|
| 1 | 119-7191 | 1 | Muffler Shield ASM |
| 1:2 | 95-0645 | 1 | Plate-Surface, Hot |
| 1:3 | 3269-32 | 2 | Rivet-Pop |
| 2 | 54-3093 | 1 | Cable-Battery, Negative |
| 3 | 120-3403 | 1 | Engine-Briggs, 356447-0304-G2 ● |
| 5 | 108-2809-03 | 1 | Engine Support ASM |
| 6 | 323-11 | 4 | Screw-HH |
| 7 | 83-1030 | 4 | Mount-Engine |
| 8 | 108-8474-01 | 2 | Front Mount ASM |
| 9 | 104-8301 | 4 | Nut-Flange, NI |
| 10 | 322-4 | 12 | Screw-HH |
| 11 | 104-8300 | 16 | Nut-Flange, NI |
| 12 | 120-3461-01 | 1 | Engine Mount ASM |
| 13 | 323-5 | 4 | Screw-HH |
| 15 | 322-10 | 4 | Screw-HH |
| 16 | 95-0632-03 | 1 | Cover ASM |
| 17 | 3210-2 | 2 | Screw-HH |
| 20 | 94-5780 | 2 | Screw-HWH |
| 26 | 120-3476 | 1 | Muffler-Dual Inlet |
| 29 | 3256-24 | 4 | Washer-Flat |
| 30 | 107-7817 | 1 | Filter-Oil, Engine |
| 34 | 3234-14 | 2 | Screw-HHF |
| 35 | 110-6348-03 | 1 | Shield-Exhaust |
| 37 | 32128-25 | 4 | Nut-HF |
| 41 | 3255-8 | 1 | Washer-Lock |
| 43 | 117-9569 | 1 | Hose-Fuel |
| 44 | 115-7868 | 1 | Valve-Check, Vacuum |
| 45 | 2412-108 | 2 | Clamp-Worm |
| 46 | 59-2580 | 2 | Spacer-Tubular |

● Obtain parts from www.briggsandstratton.com

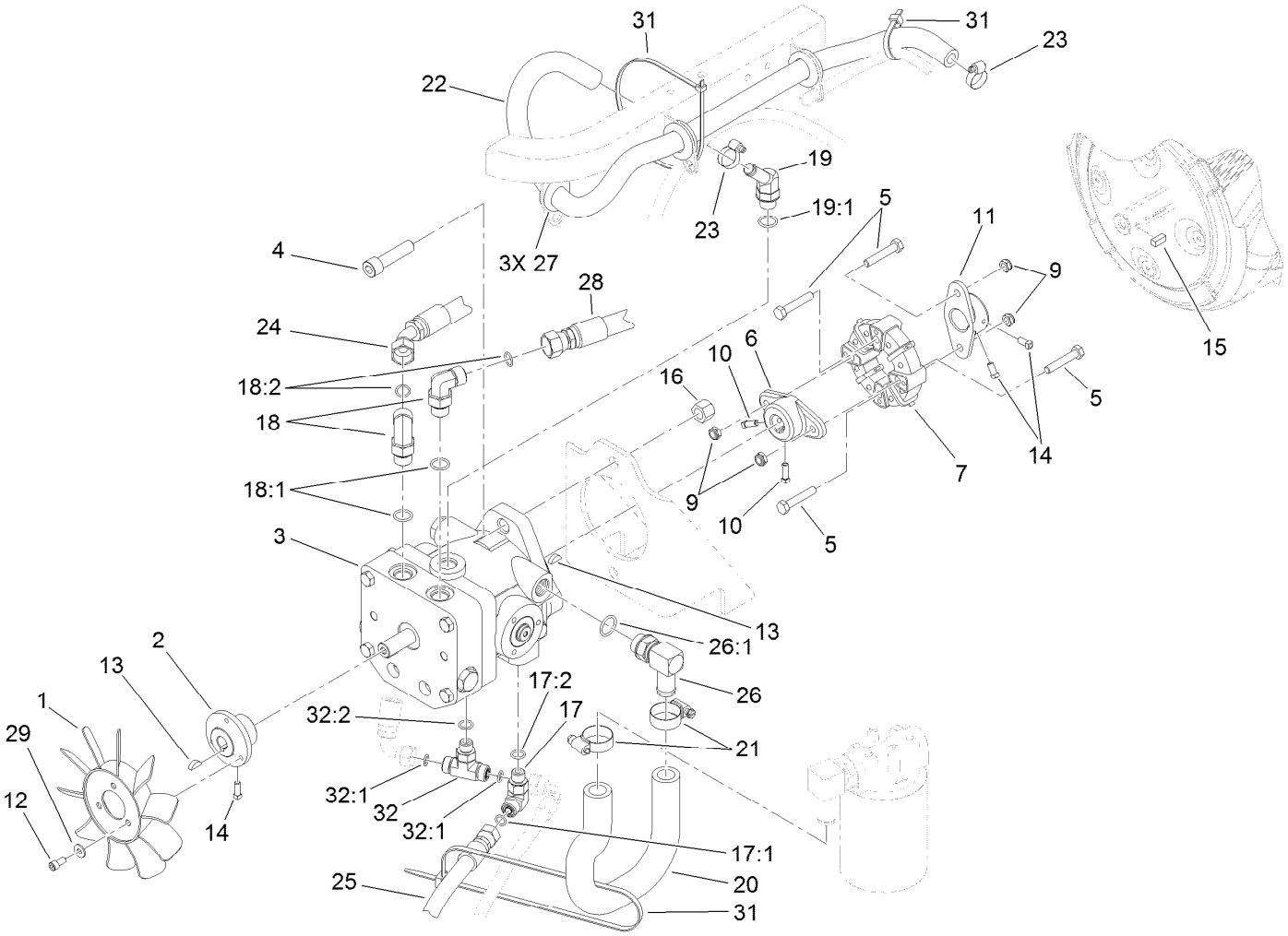


# Pump and Coupling Assembly

| Ref. | Part Number | Qty. | Description |
|---|---|---|---|
| 1 | 1-633869 | 1 | Fan-Pump, Cooling |
| 2 | 108-5484 | 1 | Hub-Fan |
| 3 | 114-0612 | 1 | Variable Piston Pump ASM |
| 4 | 3274-5 | 2 | Screw-HSH |
| 5 | 322-9 | 4 | Screw-HH |
| 6 | 110-9695 | 1 | Hub-Pump |
| 7 | 119-0652 | 1 | Coupler-Rubber |
| 9 | 3296-47 | 4 | Nut-Lock, NI |
| 10 | 3241-6 | 2 | Screw-SQH |
| 11 | 110-5236 | 1 | Hub-Engine |
| 12 | 3274-52 | 3 | Screw-HSH |
| 13 | 3257-32 | 2 | Key-Woodruff |
| 14 | 3241-7 | 4 | Screw-SQH |
| 15 | 85-9020 | 1 | Key-Square |
| 16 | 3296-23 | 2 | Nut-Lock, NI |
| 17 | 340-77 | 1 | Fitting-HYD, 90 DEG |
| 17:1 | 237-22 | 1 | O-Ring |
| 17:2 | 237-42 | 1 | O-Ring |
| 18 | 340-98 | 2 | Fitting-HYD, 90 DEG |

| Ref. | Part Number | Qty. | Description |
|---|---|---|---|
| 18:1 | 237-79 | 1 | O-Ring |
| 18:2 | 237-30 | 1 | O-Ring |
| 19 | 354-126 | 1 | Fitting-HYD, 45 DEG |
| 19:1 | 237-79 | 1 | O-Ring |
| 20 | 108-5481 | 1 | Hose-Suction |
| 21 | 2412-129 | 2 | Clamp-Hose |
| 22 | 110-1325 | 1 | Hose-Return |
| 23 | 2412-36 | 2 | Clamp-Hose |
| 24 | 108-8440 | 1 | Hose ASM |
| 25 | 108-8428 | 1 | HYD Hose ASM |
| 26 | 87-8170 | 1 | Fitting |
| 26:1 | 237-80 | 1 | O-Ring |
| 27 | 240-4 | 3 | Grommet-Rubber |
| 28 | 110-1322 | 1 | HYD Hose ASM |
| 29 | 3256-22 | 3 | Washer-Flat |
| 31 | 3290-379 | 4 | Tie-Cable |
| 32 | 340-94 | 1 | Adapter |
| 32:1 | 237-22 | 2 | O-Ring |
| 32:2 | 237-42 | 1 | O-Ring |

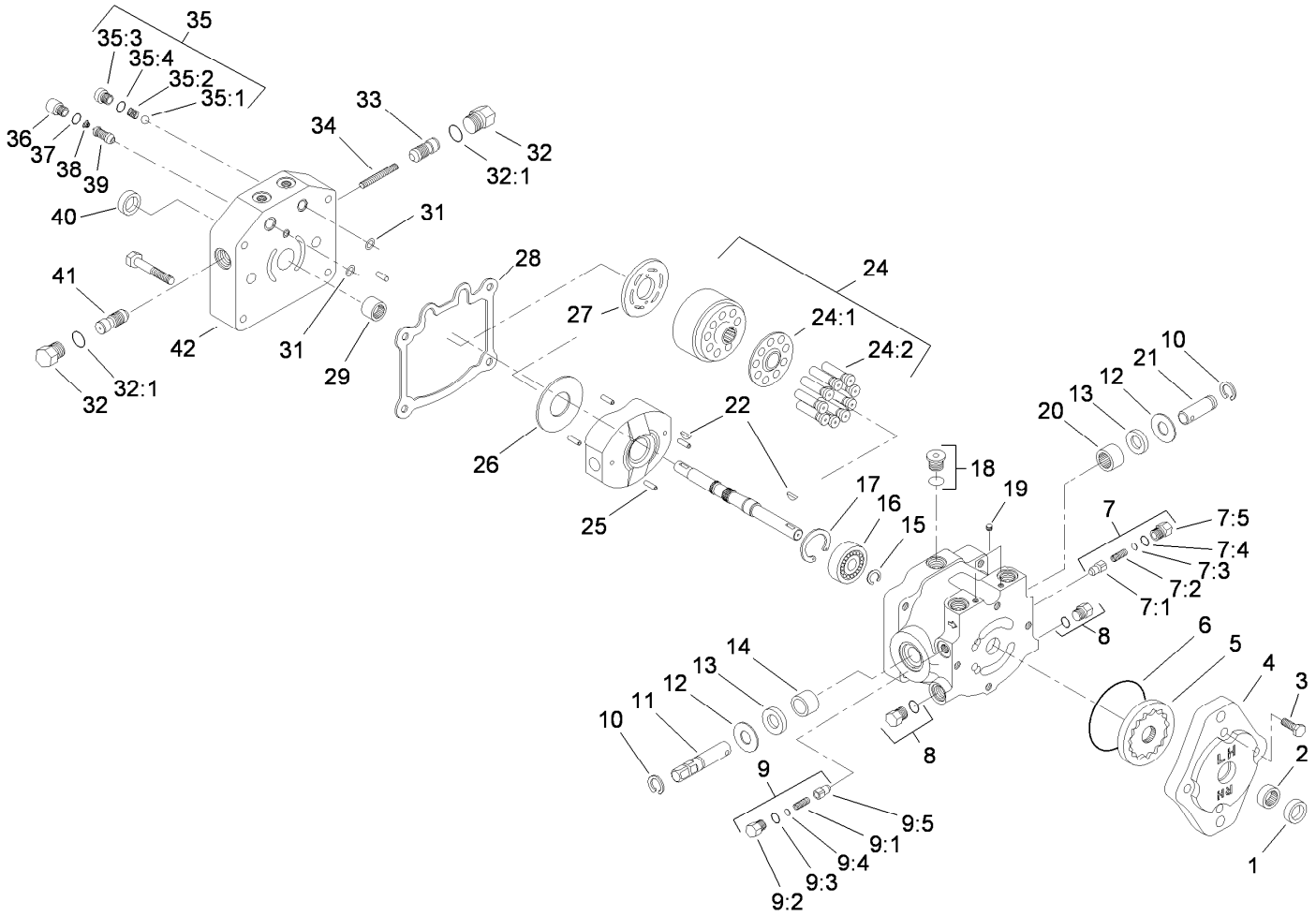


# Variable Piston Pump Assembly No. 114-0612

| Ref. | Part Number | Qty. | Description |
|---|---|---|---|
| 1 | 93-4133 | 1 | Seal-Lip |
| 2 | 67-8050 | 1 | Bearing-Needle |
| 3 | 322-4 | 4 | Screw-HH |
| 4 | 114-0611 | 1 | Housing-Pump, Charge |
| 5 | 95-5812 | 1 | Gerotor ASM |
| 6 | 237-95 | 1 | O-Ring |
| 7 | 49-8520 | 1 | Implement Relief Kit |
| 7:1 | 83-7260 | 1 | Cone-Relief, Charge |
| 7:2 | 25-2570 | 1 | Spring-Valve |
| 7:3 | 25-2470 | 1 | Pack-Shim |
| 7:4 | 237-86 | 1 | O-Ring |
| 7:5 | 25-2460 | 1 | Plug-HH |
| 8 | 67-8030 | 2 | Plug ASM |
| 9 | 49-8510 | 1 | Valve Kit |
| 9:1 | 25-2480 | 1 | Spring-Valve |
| 9:2 | 25-2460 | 1 | Plug-HH |
| 9:3 | 237-86 | 1 | O-Ring |
| 9:4 | 25-2470 | 1 | Pack-Shim |

| Ref. | Part Number | Qty. | Description |
|---|---|---|---|
| 9:5 | 83-7260 | 1 | Cone-Relief, Charge |
| 10 | 32151-46 | 2 | Ring-Retaining |
| 11 | 88-8180 | 1 | Shaft-Trunnion |
| 12 | 25-2510 | 2 | Washer-Flat |
| 13 | 25-3210 | 2 | Seal-Lip |
| 14 | 88-8190 | 1 | Bearing-Journal |
| 15 | 32151-83 | 1 | Ring-Snap |
| 16 | 95-5809 | 1 | Bearing-Ball |
| 17 | 32151-75 | 1 | Ring-Retaining |
| 18 | 67-9090 | 1 | Plug ASM |
| 19 | 75-0160 | 1 | Plug-Pipe |
| 20 | 252-82 | 1 | Bearing-Needle |
| 21 | 25-2500 | 1 | Shaft-Trunnion |
| 22 | 3257-32 | 2 | Key-Woodruff |
| 24 | 48-1800 | 1 | Cylinder Block Kit |
| 24:1 | | 1 | Retainer-Slipper ● |
| 24:2 | | 9 | Piston ASM ● |
| 25 | 32121-91 | 4 | Pin-Spring |

● Not serviced separately

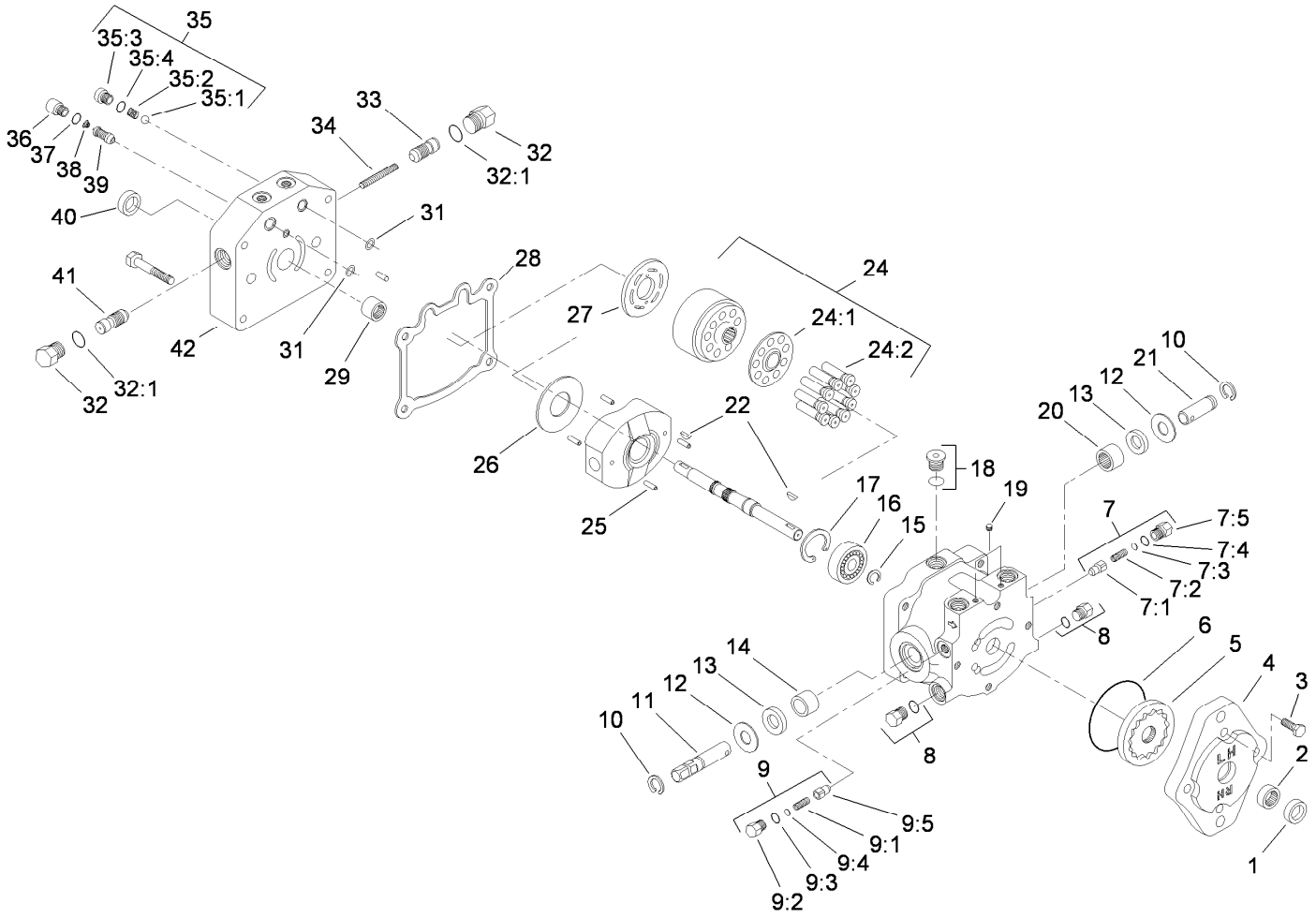


# Variable Piston Pump Assembly No. 114-0612 (continued)

| Ref. | Part Number | Qty. | Description |
|---|---|---|---|
| 26 | 25-2380 | 1 | Plate-Thrust |
| 27 | 88-8160 | 1 | Plate-Valve |
| 28 | 25-2400 | 1 | Gasket |
| 29 | 110-6341 | 1 | Bearing-Roller |
| 31 | 112-7652 | 2 | O-Ring |
| 32 | 28-3440 | 1 | Plug-Threaded |
| 32:1 | 75-0240 | 1 | O-Ring |
| 33 | 98-0920 | 1 | Valve-Acceleration |
| 34 | 25-2610 | 1 | Spring-Valve |
| 35 | 99-5689 | 1 | Check Valve Kit |
| 35:1 | 25-2490 | 1 | Ball |

| Ref. | Part Number | Qty. | Description |
|---|---|---|---|
| 35:2 | 25-2640 | 1 | Spring-Valve |
| 35:3 | 25-2650 | 1 | Plug-Valve, Check |
| 35:4 | 237-86 | 1 | O-Ring |
| 36 | 75-0190 | 1 | Plug-Special |
| 37 | 75-0240 | 1 | O-Ring |
| 38 | 110-6342 | 1 | Spring |
| 39 | 110-6343 | 1 | Valve-Scr |
| 40 | 88-8230 | 1 | Seal-Lip |
| 41 | 98-0920 | 1 | Valve-Acceleration |
| 42 | 112-7651 | 1 | Cap-End |

● Not serviced separately

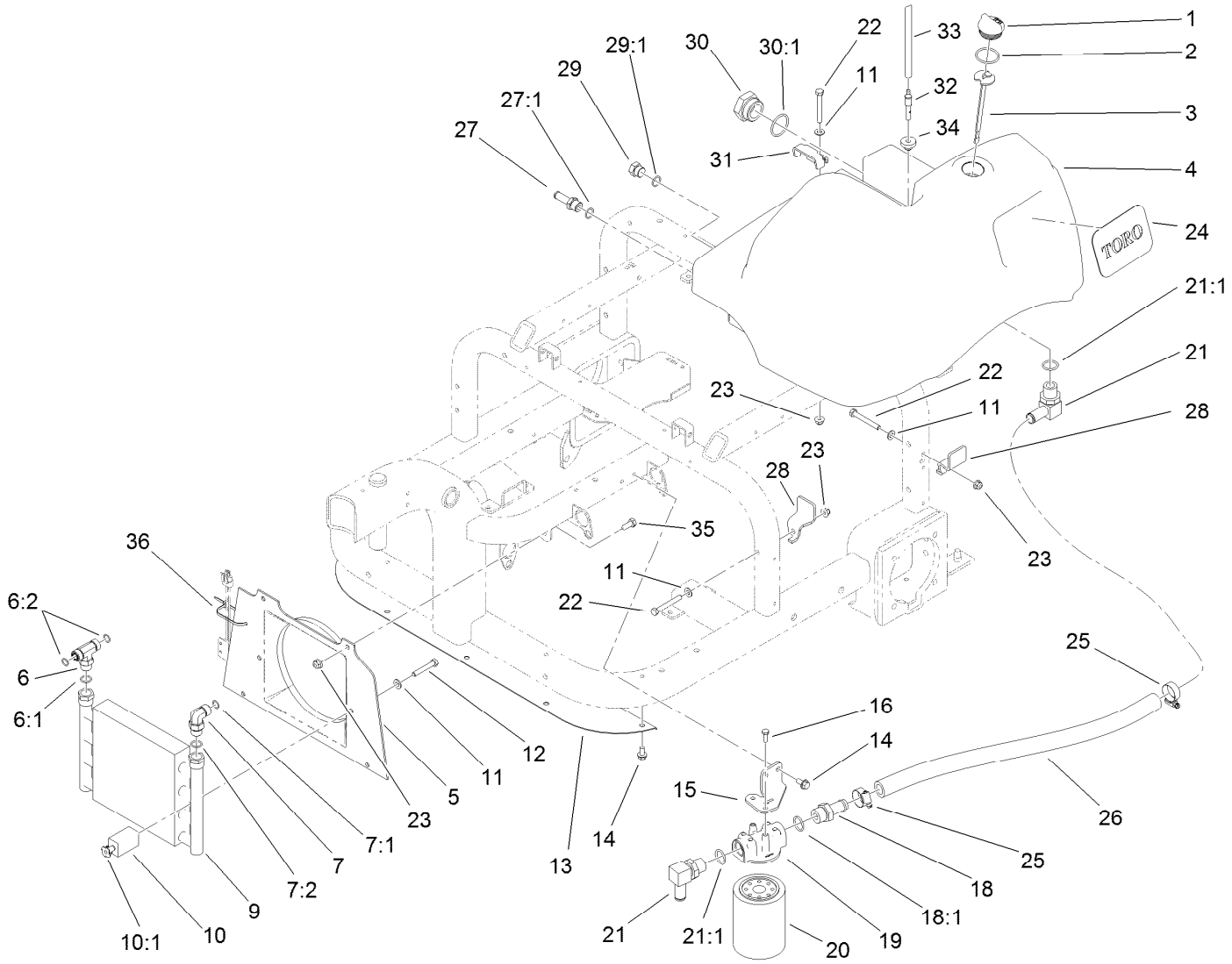


# Hydraulic Tank, Filter and Cooler Assembly

| Ref. | Part Number | Qty. | Description |
|---|---|---|---|
| 1 | 93-7498 | 1 | Plug-Plastic |
| 2 | 237-101 | 1 | O-Ring |
| 3 | 108-7996 | 1 | Dipstick ASM |
| 4 | 119-9040 | 1 | Tank-Hydraulic |
| 5 | 108-5477 | 1 | Shroud-Fan |
| 6 | 340-157 | 1 | Fitting-HYD, Tee |
| 6:1 | 237-79 | 1 | O-Ring |
| 6:2 | 237-30 | 2 | O-Ring |
| 7 | 340-98 | 1 | Fitting-HYD, 90 DEG |
| 7:1 | 237-79 | 1 | O-Ring |
| 7:2 | 237-30 | 1 | O-Ring |
| 9 | 108-8457 | 1 | Cooler-Oil |
| 10 | 85-9550 | 2 | Rubber Clamp ASM |
| 10:1 | 85-9670 | 1 | T-Nut |
| 11 | 3256-23 | 7 | Washer-Flat |
| 12 | 322-11 | 2 | Screw-HH |
| 13 | 108-5480-03 | 1 | Panel-Cooler |
| 14 | 32144-14 | 7 | Screw-HWHTF |
| 15 | 108-5482 | 1 | Bracket-Filter, Oil |
| 16 | 3234-4 | 2 | Screw-HHF |
| 18 | 354-73 | 1 | Fitting-Straight |

| Ref. | Part Number | Qty. | Description |
|---|---|---|---|
| 18:1 | 237-81 | 1 | O-Ring |
| 19 | 68-8990 | 1 | Filter Head ASM |
| 20 | 54-0110 | 1 | Filter-Oil, Transmission |
| 21 | 353-987 | 2 | Fitting-HYD, 90 DEG (Barbed) |
| 21:1 | 237-81 | 1 | O-Ring |
| 22 | 322-12 | 5 | Screw-HH |
| 23 | 104-8300 | 9 | Nut-Flange, NI |
| 24 | 108-8452 | 1 | Decal-Logo |
| 25 | 2412-129 | 2 | Clamp-Hose |
| 26 | 108-5483 | 1 | Hose-Suction, Tank |
| 27 | 354-121 | 1 | Fitting-Straight |
| 27:1 | 237-79 | 1 | O-Ring |
| 28 | 108-7965 | 2 | Clamp-Tank, HYD |
| 29 | 353-550 | 1 | Plug-HYD, HH |
| 29:1 | 237-79 | 1 | O-Ring |
| 30 | 108-8468 | 1 | Plug-HH |
| 30:1 | 237-101 | 1 | O-Ring |
| 31 | 108-7903 | 1 | Clamp-Tank |
| 32 | 110-1372 | 1 | Fitting-Vent, Tank |
| 33 | 110-8181 | 1 | Hose-Fuel |

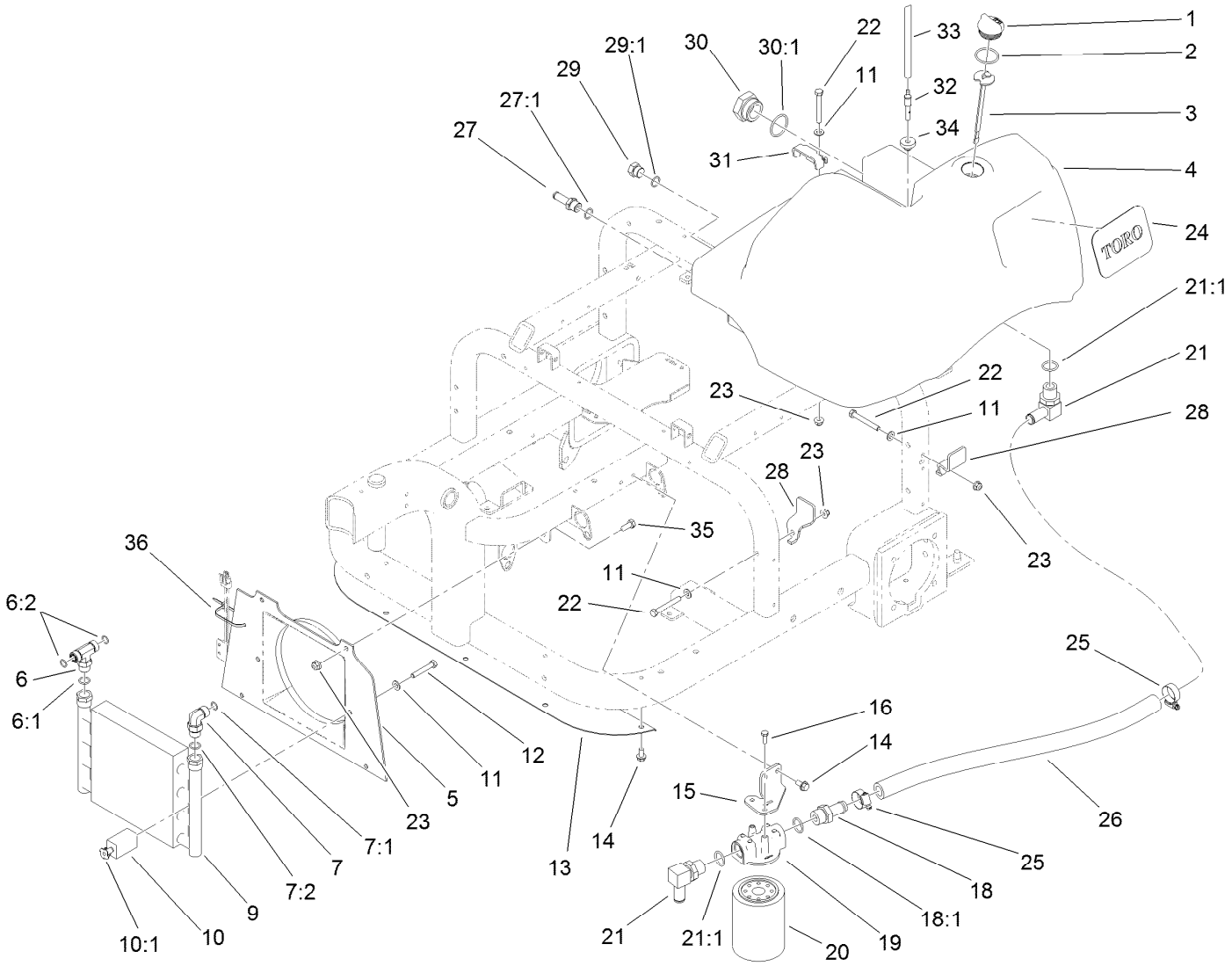


# Hydraulic Tank, Filter and Cooler Assembly (continued)

| Ref. | Part Number | Qty. | Description |
|---|---|---|---|
| 34 | 46-6560 | 1 | Bushing |

| Ref. | Part Number | Qty. | Description |
|---|---|---|---|
| 35 | 322-3 | 4 | Screw-HH |
| 36 | 3290-379 | 1 | Tie-Cable |

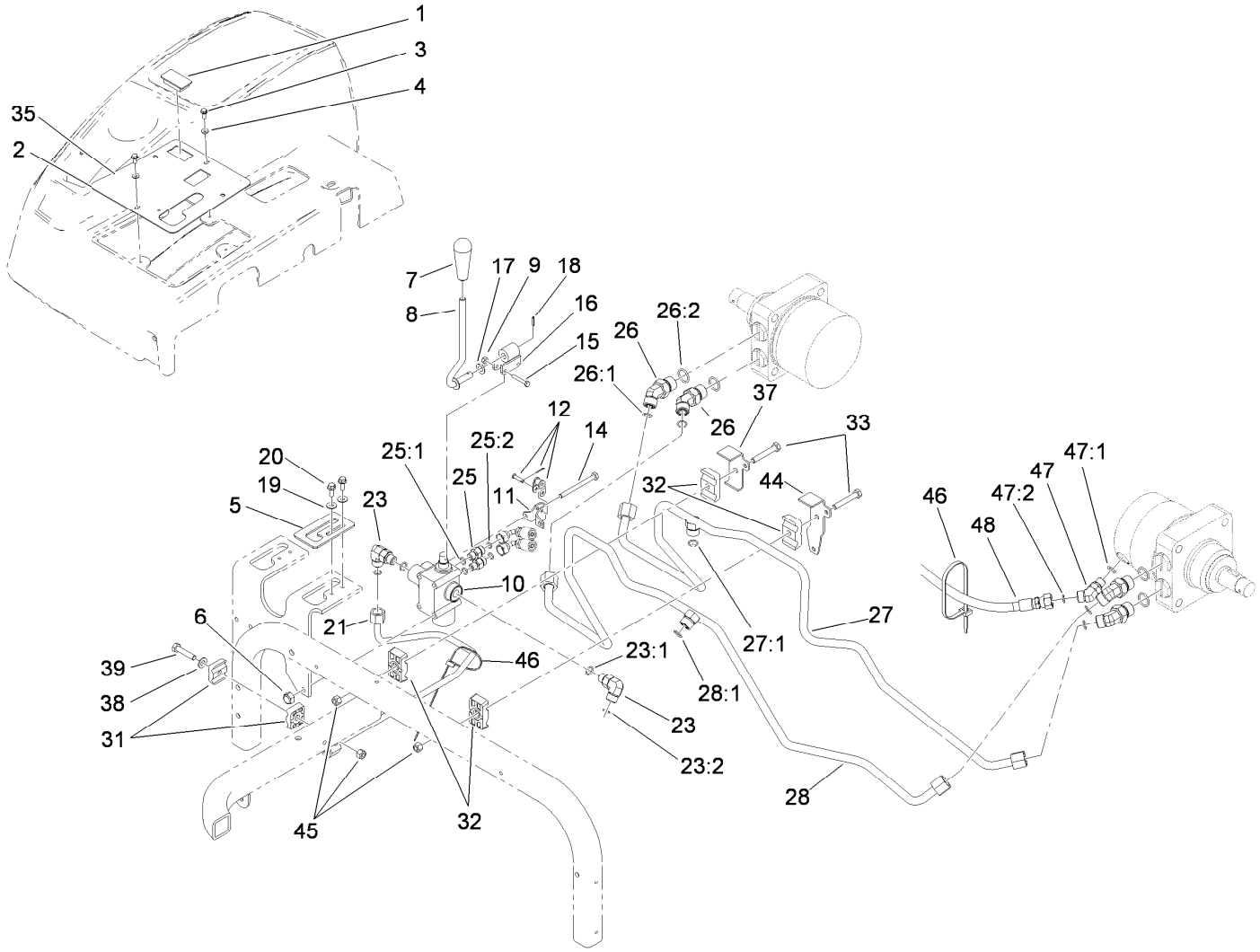


# Lift Valve and Rear Tube Assembly

| Ref. | Part Number | Qty. | Description |
|---|---|---|---|
| 1 | 99-7420 | 1 | Plug-Hole |
| 2 | 108-7909-03 | 1 | Panel-Control |
| 3 | 3290-321 | 4 | Screw-HWH |
| 4 | 3256-51 | 4 | Washer-Flat |
| 5 | 108-7941 | 1 | Plate-Guide, Lever |
| 6 | 3296-42 | 3 | Nut-Lock, NI |
| 7 | 98-0152 | 1 | Knob-Tapered |
| 8 | 108-7942 | 1 | Rear Lever ASM |
| 9 | 3296-2 | 2 | Nut-Lock, NI |
| 10 | 43-1710 | 1 | Valve ASM |
| 11 | 88-8480 | 1 | Bracket-Pivot |
| 12 | 2710-20 | 1 | Link-Offset |
| 14 | 321-23 | 3 | Screw-HH |
| 15 | 3290-360 | 2 | Screw-HH |
| 16 | 98-8159 | 1 | Pivot |
| 17 | 3290-477 | 1 | Washer-Curved |
| 18 | 32121-73 | 1 | Pin-Roll |
| 19 | 3256-1 | 2 | Washer-Flat |
| 20 | 3234-33 | 2 | Screw-HHF |
| 21 | 108-8416 | 1 | Tube ASM |
| 23 | 340-77 | 2 | Fitting-HYD, 90 DEG |

| Ref. | Part Number | Qty. | Description |
|---|---|---|---|
| 23:1 | 237-22 | 1 | O-Ring |
| 23:2 | 237-42 | 1 | O-Ring |
| 25 | 340-92 | 2 | Fitting-HYD, Straight |
| 25:1 | 237-78 | 1 | O-Ring |
| 25:2 | 237-21 | 1 | O-Ring |
| 26 | 340-89 | 4 | Fitting-HYD, 45 DEG |
| 26:1 | 237-30 | 1 | O-Ring |
| 26:2 | 237-80 | 1 | O-Ring |
| 27 | 108-8406 | 1 | Tube ASM |
| 27:1 | 237-30 | 1 | O-Ring |
| 28 | 110-1323 | 1 | Tube ASM |
| 28:1 | 237-30 | 1 | O-Ring |
| 31 | 56-7973 | 2 | Clamp-Tube |
| 32 | 56-7976 | 4 | Clamp-Tube |
| 33 | 322-10 | 2 | Screw-HH |
| 35 | 108-8484 | 1 | Decal-Lift, Rear |
| 37 | 110-1333 | 1 | Bracket-Clamp |
| 38 | 3256-23 | 1 | Washer-Flat |
| 39 | 322-7 | 1 | Screw-HH |
| 44 | 110-1332 | 1 | Bracket-Clamp |
| 45 | 3296-29 | 3 | Nut-Lock, NI |

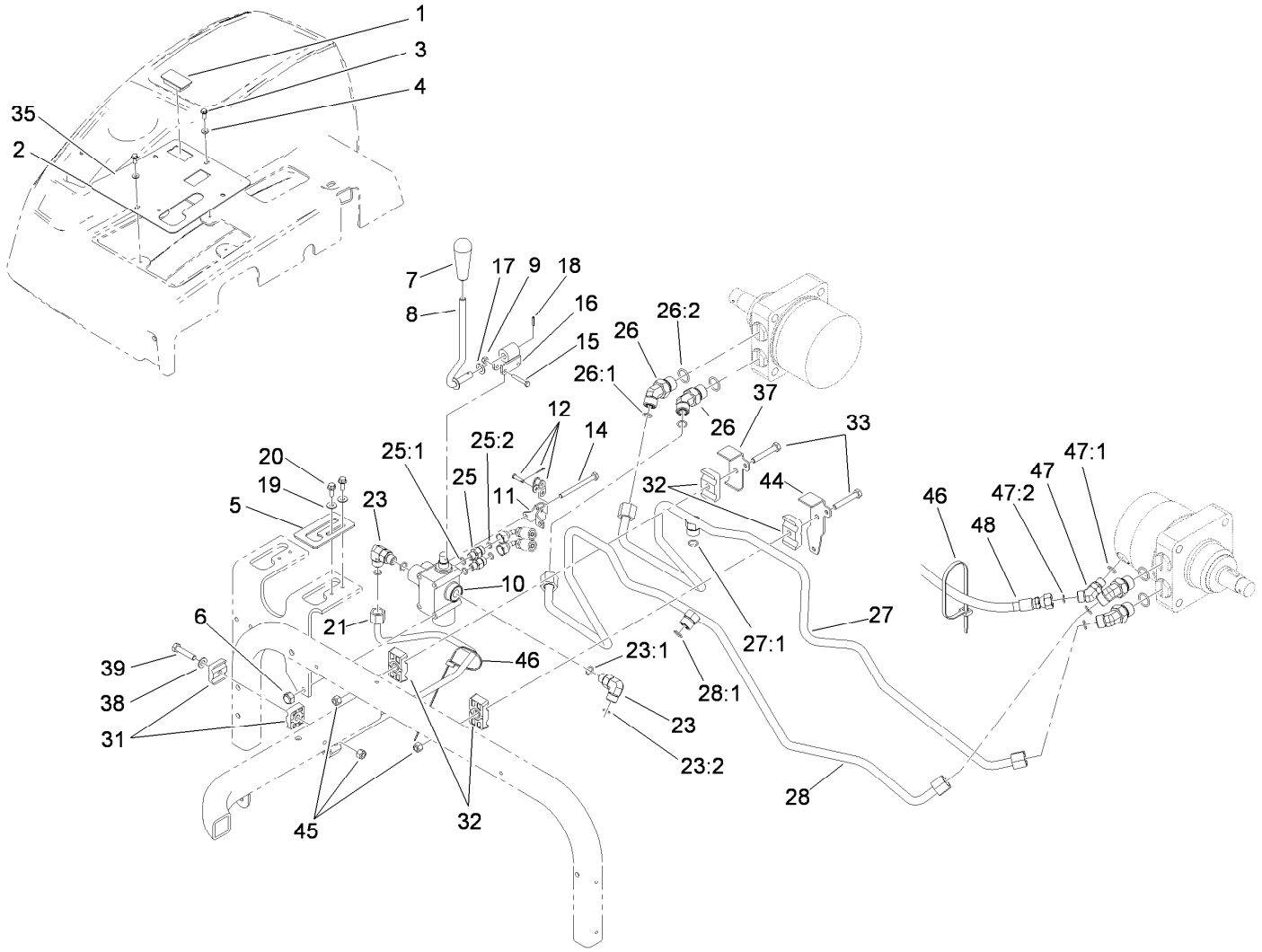


# Lift Valve and Rear Tube Assembly (continued)

| Ref. | Part Number | Qty. | Description |
|---|---|---|---|
| 46 | 3290-378 | 2 | Tie-Cable |
| 47 | 340-87 | 1 | Fitting-HYD, 45 DEG |
| 47:1 | 237-22 | 1 | O-Ring |
| 47:2 | 237-42 | 1 | O-Ring |
| 48 | 112-1411 | 1 | Hose-HYD |

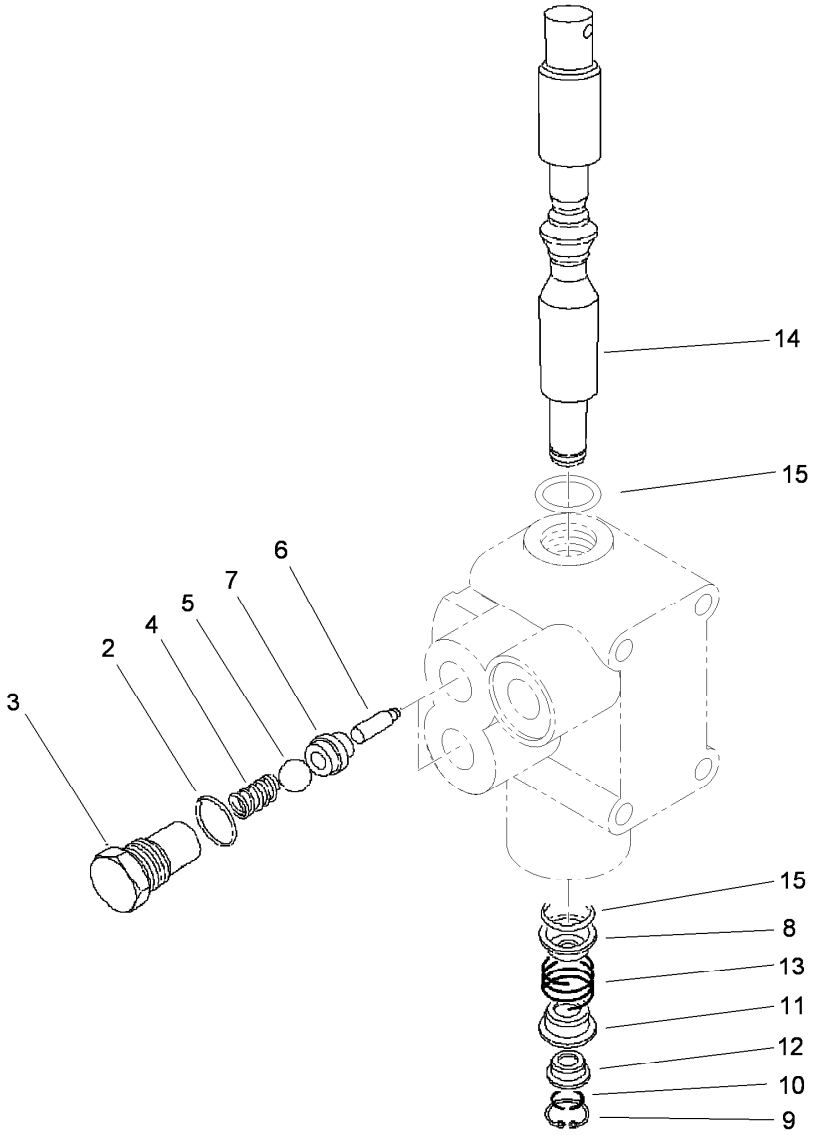


# Valve Assembly No. 43-1710

| Ref. | Part Number | Qty. | Description |
|---|---|---|---|
| 2 | 237-42 | 2 | O-Ring |
| 3 | 22-8330 | 2 | Plug |
| 4 | 22-8340 | 2 | Spring |
| 5 | 22-8350 | 2 | Ball |
| 6 | 22-8360 | 2 | Pin |
| 7 | 22-8370 | 2 | Seat-Valve |
| 8 | 22-8380 | 1 | Retainer |
| 9 | 22-8490 | 1 | Ring-Snap |
| 10 | 22-8480 | 1 | Ring-Snap |
| 11 | 22-8390 | 1 | Retainer |
| 12 | 22-8400 | 1 | Spacer |
| 13 | 22-8410 | 1 | Spring |
| 14 | 22-8420 | 1 | Spool |
| 15 | 22-8500 | 2 | O-Ring |

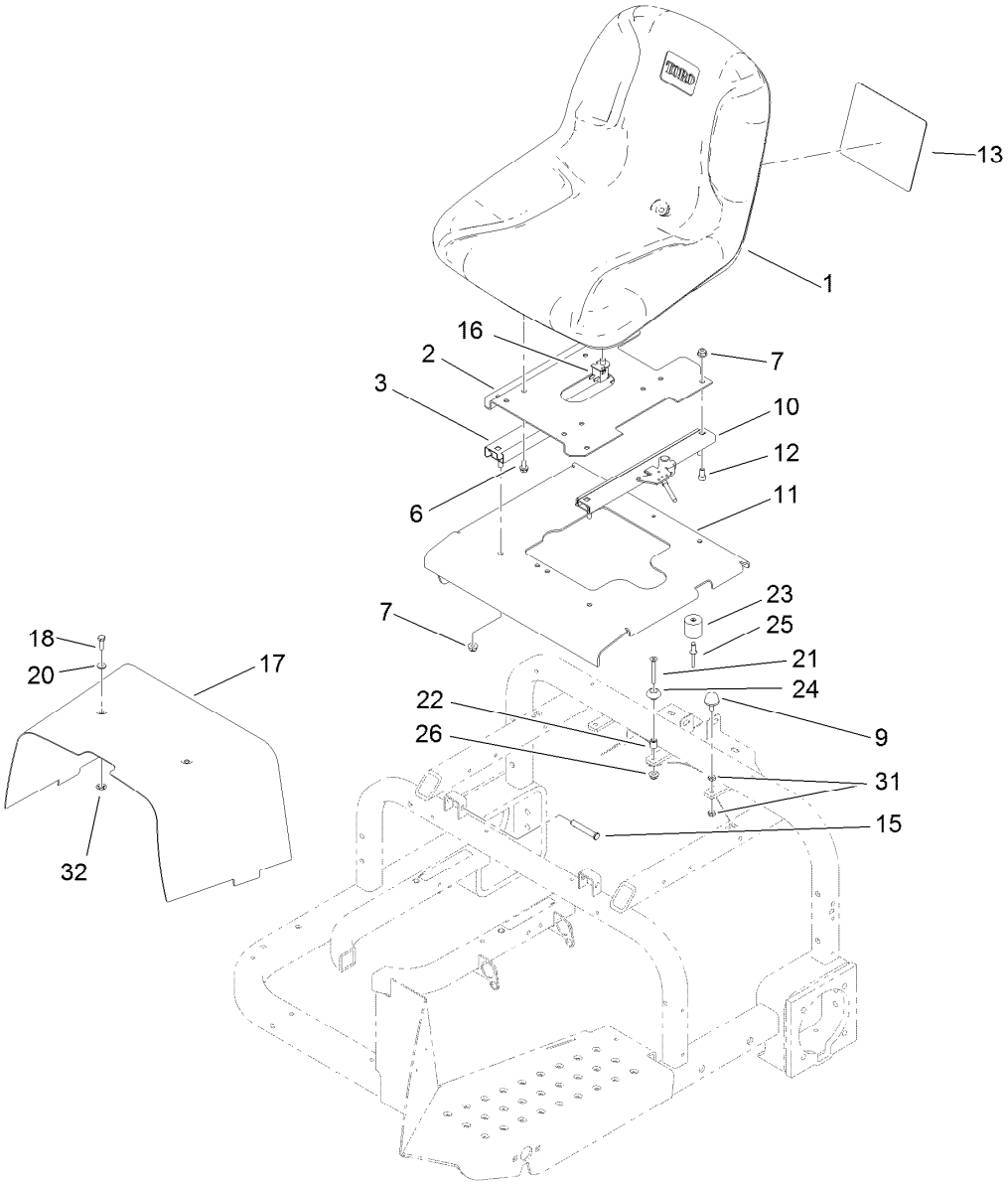


# Seat and Shroud Assembly

| Ref. | Part Number | Qty. | Description |
|---|---|---|---|
| 1 | 108-6878 | 1 | Seat |
| 2 | 108-7931-03 | 1 | Base-Seat |
| 3 | 51-0780 | 1 | Slider-Seat |
| 6 | 3234-14 | 4 | Screw-HHF |
| 7 | 104-8300 | 8 | Nut-Flange, NI |
| 9 | 1-523420 | 2 | Bumper |
| 10 | 51-0790 | 1 | Adjuster-Seat, LH |
| 11 | 112-1445-03 | 1 | Seat ASM |
| 12 | 3274-12 | 4 | Screw-HSH |
| 13 | 108-8418 | 1 | Decal-Service |
| 15 | 112-7153 | 2 | Pin |
| 16 | 82-2190 | 1 | Switch-Bail |

| Ref. | Part Number | Qty. | Description |
|---|---|---|---|
| 17 | 108-6859-01 | 1 | Shroud-Center |
| 18 | 321-5 | 2 | Screw-HH |
| 20 | 3256-1 | 2 | Washer-Flat |
| 21 | 363-1571 | 1 | Screw-PFH |
| 22 | 609588 | 1 | Spacer |
| 23 | 99-7830 | 1 | Rubber Receptical ASM |
| 24 | 99-7833 | 1 | Post-Holding |
| 25 | 3290-412 | 1 | Rivet |
| 26 | 104-7201 | 1 | Nut-HF |
| 31 | 3218-1 | 4 | Nut-Jam |
| 32 | 106-8737 | 2 | Nut-Retainer |

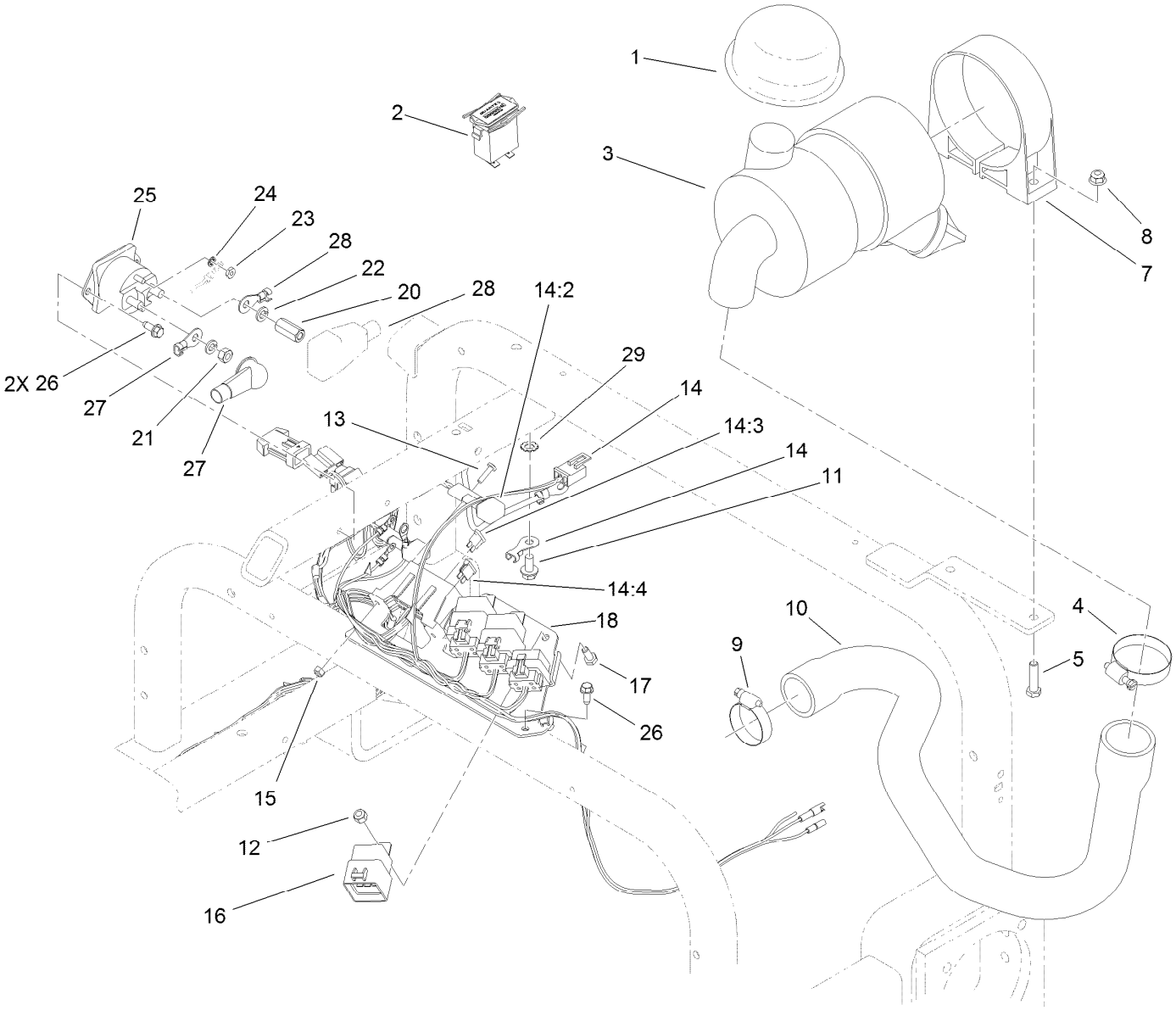


# Wire Harness, Air Cleaner and Hose Assembly

| Ref. | Part Number | Qty. | Description |
|---|---|---|---|
| 1 | 46-7510 | 1 | Hood-Inlet, Air |
| 2 | 1-513374 | 1 | Meter-Hour |
| 3 | 93-2190 | 1 | Air Cleaner ASM |
| 4 | 2412-92 | 1 | Clamp-Hose |
| 5 | 322-6 | 2 | Screw-HH |
| 7 | 95-5806 | 1 | Bracket-Mounting |
| 8 | 104-8300 | 2 | Nut-Flange, NI |
| 9 | 2412-3 | 1 | Clamp-Hose |
| 10 | 117-9576 | 1 | Hose-Air |
| 11 | 32144-14 | 1 | Screw-HWHTF |
| 12 | 3296-42 | 3 | Nut-Lock, NI |
| 13 | 3250-13 | 2 | Screw-PPH |
| 14 | 112-1446 | 1 | Harness-Wire |
| 14:2 | 100-4918 | 2 | Diode |
| 14:3 | 218-578 | 1 | Fuse-Blade, 10 Amp |

| Ref. | Part Number | Qty. | Description |
|---|---|---|---|
| 14:4 | 109355 | 1 | Fuse-Blade, 15 Amp |
| 15 | 3296-2 | 2 | Nut-Lock, NI |
| 16 | 99-7430 | 3 | Relay |
| 17 | 321-3 | 3 | Screw-HH |
| 18 | 112-1444-01 | 1 | Bracket-Relay |
| 20 | 110-3380 | 1 | Nut-Standoff |
| 21 | 3218-13 | 1 | Nut-Jam, Brass |
| 22 | 3253-4 | 2 | Washer-Lock |
| 23 | 3219-14 | 2 | Nut-Hex |
| 24 | 3254-1 | 2 | Washer-Lock, Int |
| 25 | 28-4210 | 1 | Solenoid |
| 26 | 32144-10 | 4 | Screw-HWH |
| 27 | 110-3315 | 1 | Cable-Positive, Starter |
| 28 | 110-3314 | 1 | Cable-Positive, Battery |
| 29 | 3255-9 | 1 | Washer-Lock |

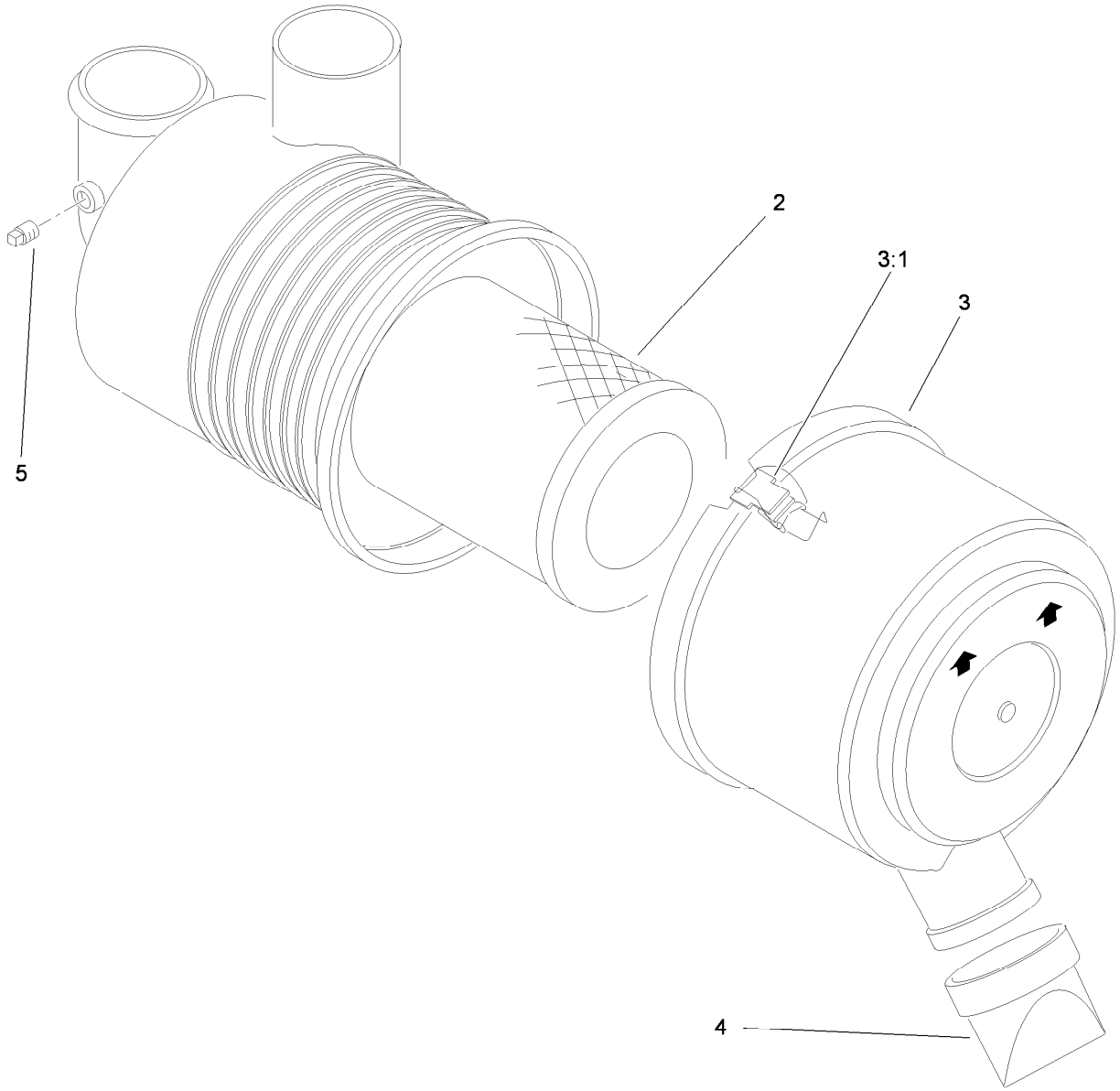


# Air Cleaner Assembly No. 93-2190

| *Ref.* | *Part Number* | *Qty.* | *Description* |
|---|---|---|---|
| 2 | 108-3811 | 1 | Filter-Air |
| 3 | 94-3652 | 1 | Cover ASM |
| 3:1 | 1-643283 | 2 | Latch-Cleaner, Air |
| 4 | 87-9400 | 1 | Valve-Vacuator |
| 5 | 285-17 | 1 | Plug-Pipe |

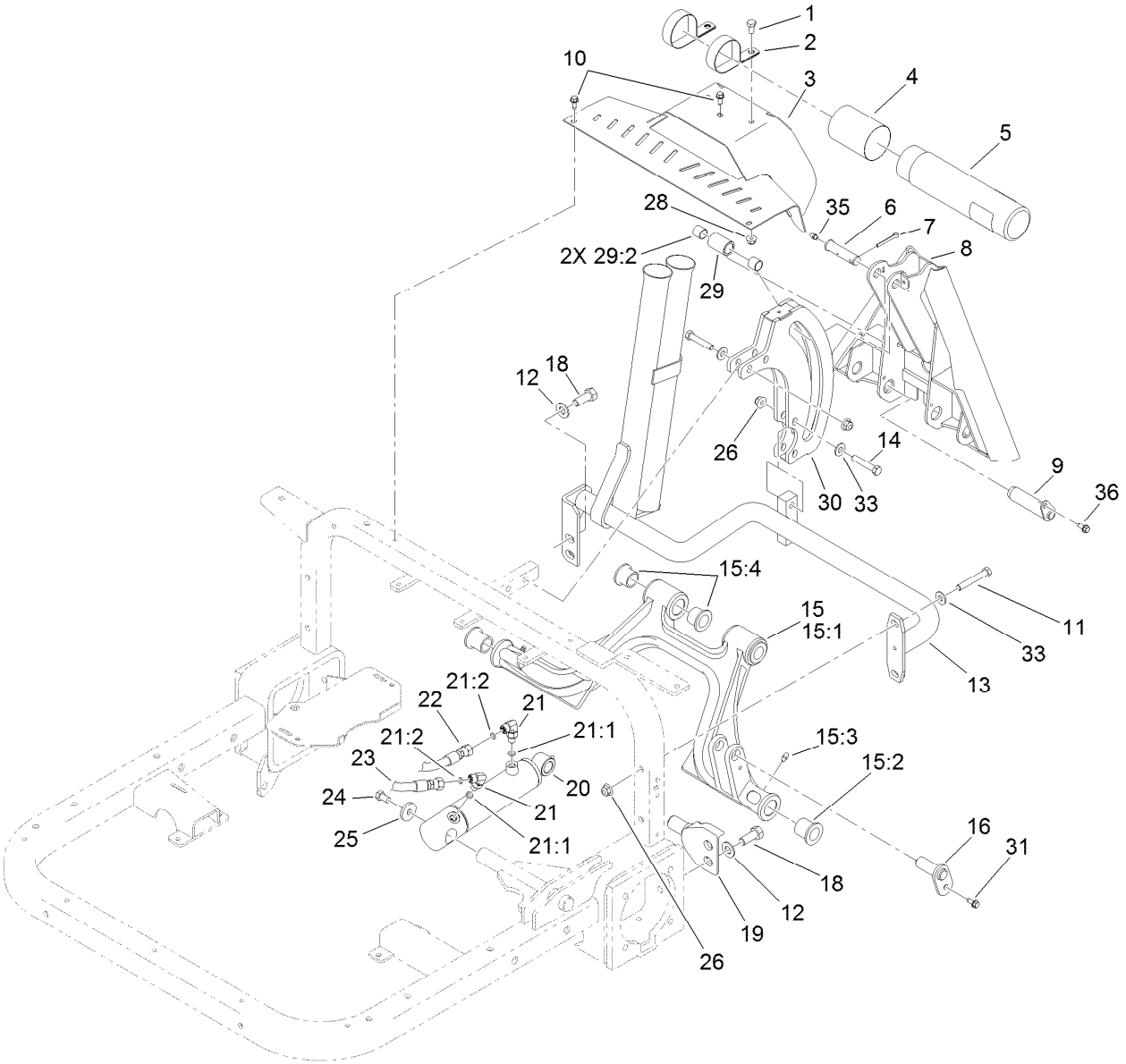


# Rear Hitch Assembly

| Ref. | Part Number | Qty. | Description |
|---|---|---|---|
| 1 | 322-2 | 2 | Screw-HH |
| 2 | 2412-133 | 2 | R-Clamp |
| 3 | 108-7970-01 | 1 | Rear Cover ASM |
| 4 | 104-7048 | 1 | Cap-Housing |
| 5 | 104-7050 | 1 | Tube-Manual |
| 6 | 108-2282 | 1 | Pin-Clevis |
| 7 | 3272-23 | 1 | Pin-Cotter |
| 8 | 108-6870-01 | 1 | Adapter ASM |
| 9 | 108-6885 | 2 | Pin ASM |
| 10 | 32144-10 | 3 | Screw-HWH |
| 11 | 323-12 | 2 | Screw-HH |
| 12 | 3256-26 | 4 | Washer-Flat |
| 13 | 108-6860-03 | 1 | Hitch Frame ASM |
| 14 | 323-10 | 4 | Screw-HH |
| 15 | 120-3457 | 1 | Rear Hitch ASM |
| 15:1 | 115-5609-01 | 1 | Hitch |
| 15:2 | 95-3577 | 2 | Bushing |
| 15:3 | 302-5 | 4 | Fitting-Grease |
| 15:4 | 33-3090 | 4 | Bushing |
| 16 | 115-5648 | 1 | Pin-Flag |

| Ref. | Part Number | Qty. | Description |
|---|---|---|---|
| 18 | 325-5 | 4 | Screw-HH |
| 19 | 115-5618 | 2 | Pivot-Hub |
| 20 | 115-5647 | 1 | HYD Lift Cylinder ASM |
| 21 | 340-132 | 2 | Fitting-HYD, 90 DEG |
| 21:1 | 237-78 | 1 | O-Ring |
| 21:2 | 237-21 | 1 | O-Ring |
| 22 | 95-8837 | 1 | Hose ASM |
| 23 | 100-3833 | 1 | HYD Hose ASM |
| 24 | 323-34 | 1 | Screw-HH |
| 25 | 53-6380 | 1 | Washer-Flat |
| 26 | 104-8301 | 6 | Nut-Flange, NI |
| 28 | 104-8300 | 2 | Nut-Flange, NI |
| 29 | 108-5472 | 1 | Tube ASM |
| 29:2 | 256-311 | 2 | Bushing-Split |
| 30 | 110-1368-01 | 1 | Roller Plate ASM |
| 31 | 32144-10 | 1 | Screw-HWH |
| 33 | 3256-3 | 6 | Washer-Flat |
| 35 | 302-5 | 1 | Fitting-Grease |
| 36 | 99-8445 | 2 | Screw-HWH, Taptite |

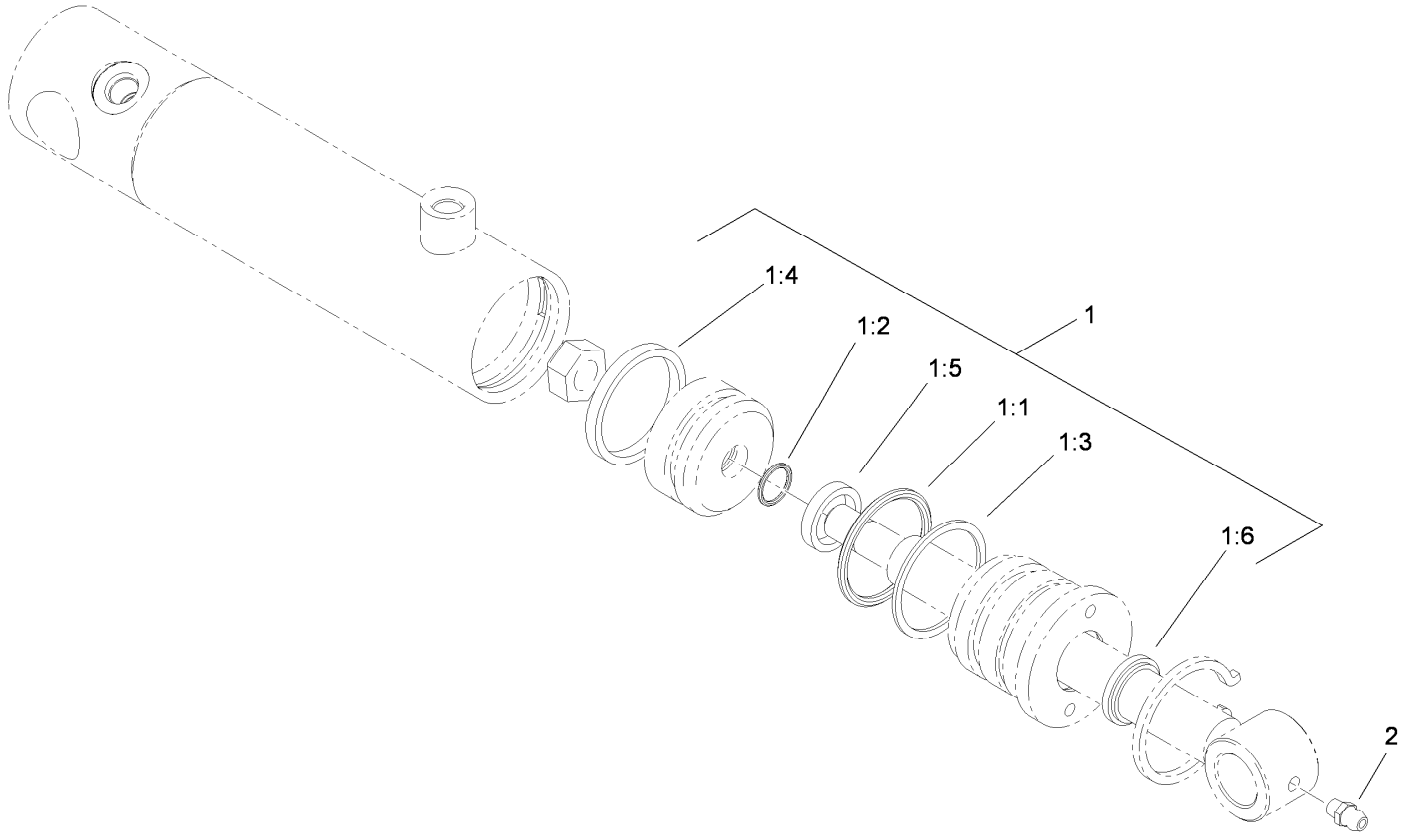


# Hydraulic Lift Cylinder Assembly No. 115-5647

| *Ref.* | *Part Number* | *Qty.* | *Description* |
|---|---|---|---|
| 1 | 108-4597 | 1 | Seal Kit |
| 1:1 | | 1 | O-Ring ● |
| 1:2 | | 1 | O-Ring ● |
| 1:3 | | 1 | Ring-Back Up ● |
| 1:4 | | 1 | Seal-Psp ● |
| 1:5 | | 1 | Seal-Rod ● |
| 1:6 | | 1 | Seal-Dust ● |
| 2 | 302-5 | 1 | Fitting-Grease |

● Not serviced separately

# Attachments and Accessories

## For 08705 Sand Pro 5040 Traction Unit

| Product Name | Model/Part |
|---|---|
| Front Lift Frame | 08712 |
| Manual Blade | 08714 |
| Midmount Toolbar System | 08731 |
| Tooth Rake | 08751 |
| Spring Rake | 08752 |
| Rear Broom | 08753 |
| Finish Grader | 08754 |
| Spiker | 08755 |
| Drag Mat Carrier System | 08756 |
| Debris Blower | 08759 |
| QAS Utility Box | 08760 |
| QAS Nail Drag | 08761 |
| QAS Bunker Pump | 08765 |
| Rear Remote Hydraulic Kit | 08781 |
| Front Remote Hydraulics | 08782 |
| Synthetic Turf Conditioner, Sand Pro/Infield Pro with QAS | 08790 |
| Turf Groomer, Sand Pro Traction Unit with QAS | 08794 |
| Yellow Hydraulic Cap | 107-1576 |
| Yellow Hydraulic Fluid Cap (Tethered) | 107-2174 |
| Premium All Season Hydraulic Fluid (55 Gallon Drum) | 108-1177 |
| Premium All Season Hydraulic Fluid (5 Gallon Pail) | 108-1178 |
| Premium All Purpose Grease (Tube) | 108-1190 |
| Premium Engine Oil SAE 30 (Drum) | 108-1196 |
| Premium Engine Oil SAE 30 (Pail) | 108-1197 |
| Light Kit | 110-1314 |
| Speed Limiter Kit | 110-1371 |
| Draw Bar Hitch Assembly | 110-1375 |
| Smooth Wheel and Tire ASM | 112-0034 |
| Drag Mat Assembly | 112-1424 |
| Variable Orifice Kit | 112-1433 |
| Carbide Tine Pack | 119-2152 |
| Spark Arrestor Screen | 119-7185 |
| MVP Filter Kit | 30035 |
| Wheel and Tire Assembly | 94-6126 |

**Notes:**

**Notes:**

**Notes:**

TORO®

Count on it.