FORM NO. 3318–921

TORO®

MODEL NO. 03525

PARTS CATALOG

STANDARD REAR ROLLER KIT

For Reelmaster® 5100D & 5300D

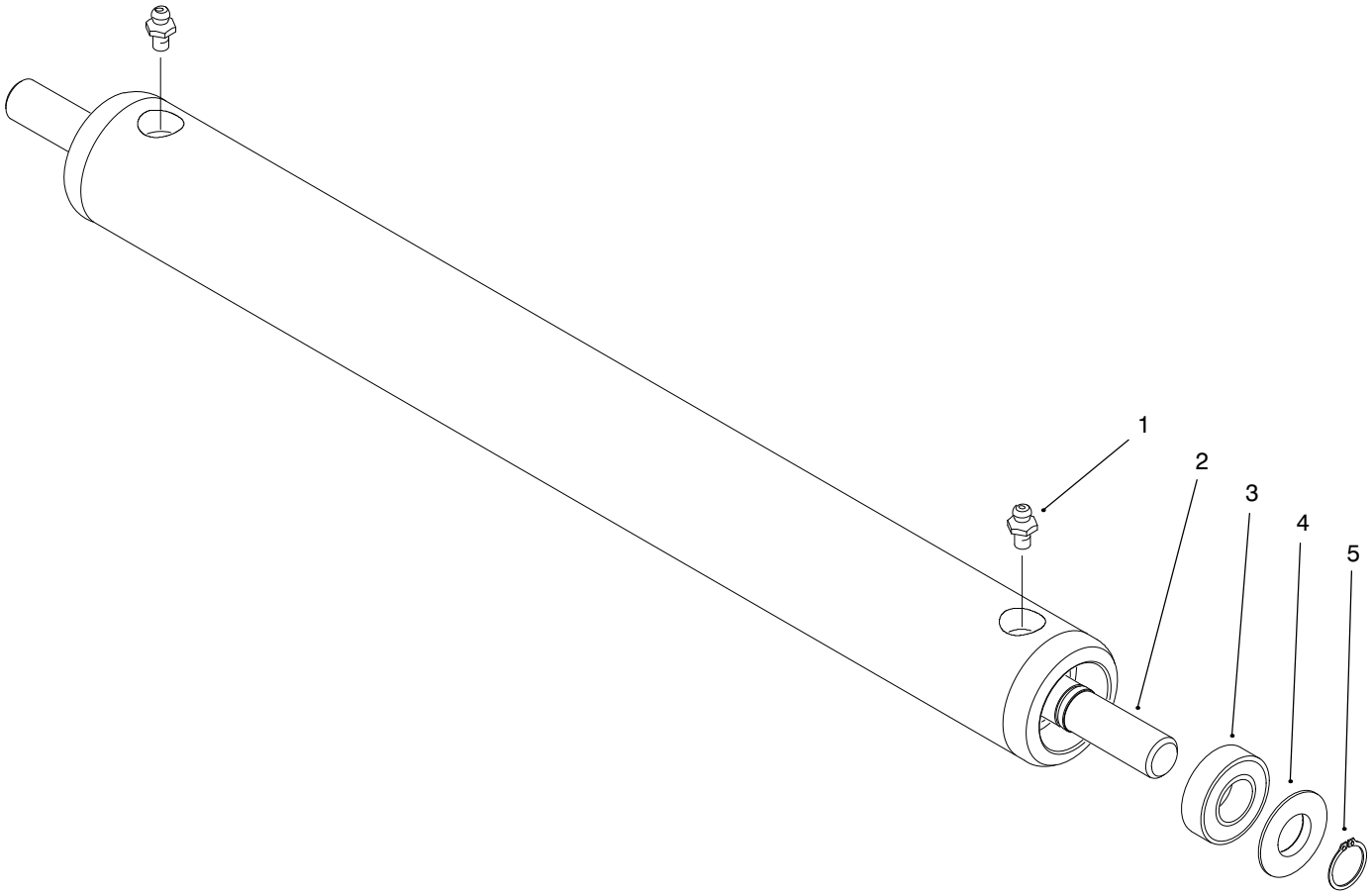

ROLLER ASSEMBLY

Ref. No.	Part No.	Description	No. Used
1	302–5	Fitting – Grease	10
2	85–7180	Shaft – Roller	5
3	85–9970	Bearing Assembly	10
4	85–7190	Washer – Shield	10
5	32151–12	Ring – Retaining	10

©The TORO Company – 1996
All Rights Reserved