Form No. 3370-429 Rev B

Jack Stand Kit

Groundsmaster 360 Series Multi-Purpose Machine

Model No. 30579

Installation Instructions

Safety

Safety and Instructional Decals

Safety decals and instructions are easily visible to the operator and are located near any area of potential danger. Replace any decal that is damaged or lost.

Your kit will include **one** of the following decals:

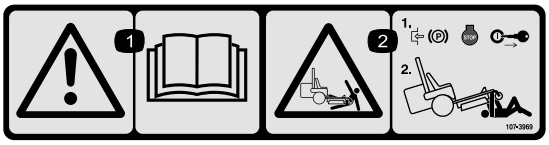

107-3969

1. Warning—read the *Operator's Manual*.
2. Crushing hazard, mower—engage the parking brake, stop the engine, and remove the ignition key before working under the mower.

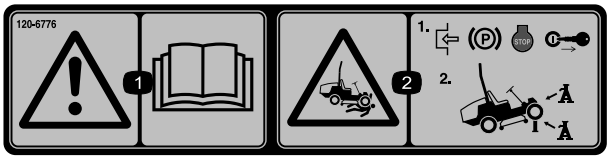

120-6776

1. Warning—read the *Operator's Manual.*
2. Crushing hazard, mower; engage the parking brake, stop the engine, and remove the ignition key before working under the mower. Always use jack stands.

Loose Parts

Use the chart below to verify that all parts have been shipped.

Description	Qty.	Use
Jack bracket	1	Install the kit.
Jack storage bracket	1	
Jack support bracket	1	
Swivel jack	1	
Carriage bolt (1/4 x 1-1/2 inches)	1	
Bungee (8 inch)	1	
Flat washer	1	
Hex flange nut	1	
Hex-head flange bolt	5	
Hex-head bolt	1	
Locknut	6	

© 2012—The Toro® Company
8111 Lyndale Avenue South
Bloomington, MN 55420

Register at www.Toro.com.

Original Instructions (EN)
Printed in the USA
All Rights Reserved

Installing the Kit

Preparing the Machine

1. Park the machine on a level surface, and lower the mower deck and any attachments to the ground.
2. Stop the engine, wait for all moving parts to stop, engage the parking brake, and remove the key from the ignition switch.

Installing the Kit to a Machine with a Quick-Attach System

1. Secure the bungee to the jack storage bracket with a carriage bolt, a flat washer, and a hex-flange nut (Figure 1).

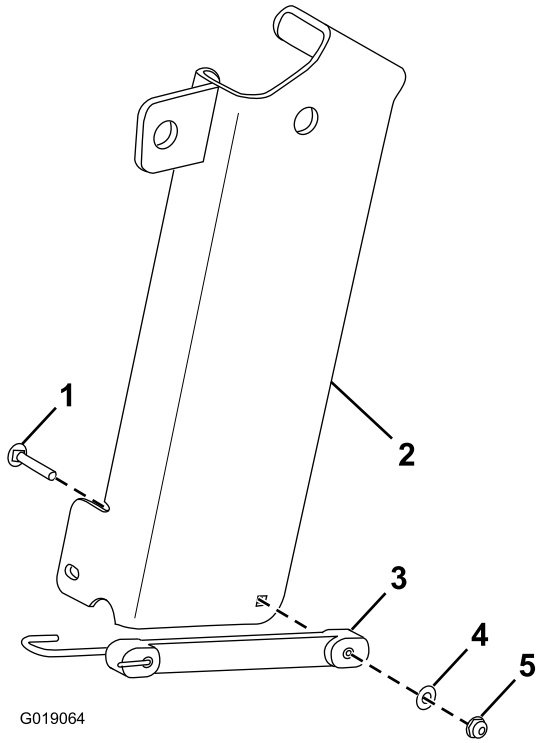

Figure 1

1. Carriage bolt
2. Jack storage bracket
3. Bungee
4. Flat washer
5. Hex-flange nut

2. Pull out the pin at the top of the front attach bracket (Figure 2).

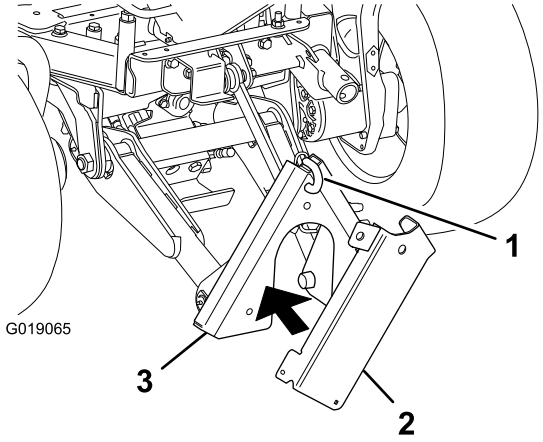

Figure 2

1. Pin
2. Jack storage bracket
3. Front-attach bracket

3. Hold the jack storage bracket against the front attach bracket, and secure the jack storage bracket to the front-attach bracket with the pin (Figure 2).
4. Install the jack bracket to the machine frame with 3 hex-head flange bolts (1/2 x 1-1/2 inches), a hex-head bolt (1/2 x 4-1/2 inches), and 4 locknuts (Figure 3).

   Note: You may need to lower the front-attach bracket to allow for clearance for installing the jack bracket and using the jack.

   Note: Remove the existing hardware from the holes in the machine frame where you will attach the jack bracket.

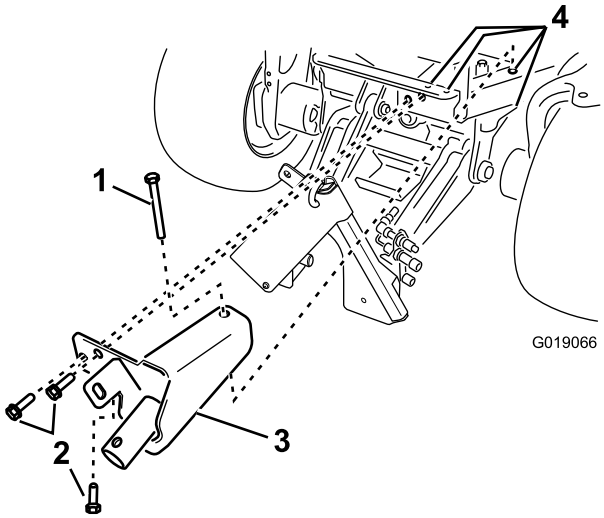

Figure 3

1. Hex-head bolt (1/2 x 4-1/2 inches) (existing)
2. Hex-head flange bolt (1/2 x 1-1/2 inches) (3)
3. Jack bracket
4. Locknut (4) (not shown)

Installing the Kit to a Machine without a Quick-Attach System

1. Secure the bungee to the jack support bracket with a carriage bolt, a flat washer, and a hex-flange nut (Figure 4).

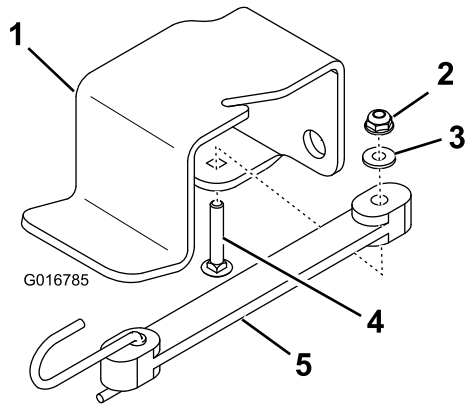

Figure 4

1. Jack support bracket
2. Hex-flange nut
3. Flat washer
4. Carriage bolt
5. Bungee

2. Attach the jack support bracket to the machine frame with 2 hex-head flange bolts and 2 locknuts (Figure 5).

   Note: Remove the existing hardware from the holes in the machine frame where you will attach the jack support bracket and the jack bracket.

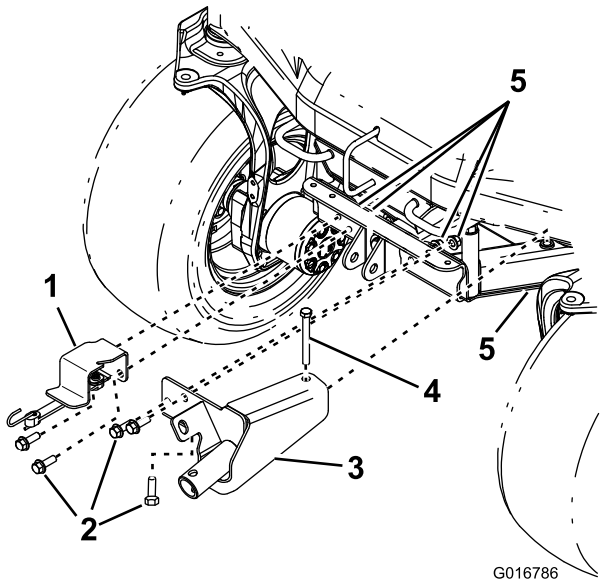

Figure 5

1. Jack support bracket
2. Hex-head flange bolt (1/2 x 1-1/2 inches) (4)
3. Jack bracket
4. Hex-head bolt (1/2 x 4-1/2 inches)
5. Locknut (5)

3. Install the jack bracket to the machine frame with 3 hex-head flange bolts (1/2 x 1-1/2 inches), a hex-head bolt (1/2 x 4-1/2 inches), and 4 locknuts (Figure 5).

   Note: Remove the existing hardware from the holes in the machine frame where you will attach the jack bracket.

Operation

1. Remove the jack from the jack storage bracket (on a machine with a Quick-Attach System) or the jack support bracket (on a machine without a Quick-Attach System).
2. Install the hub of the jack over the hub of the jack bracket (Figure 6).

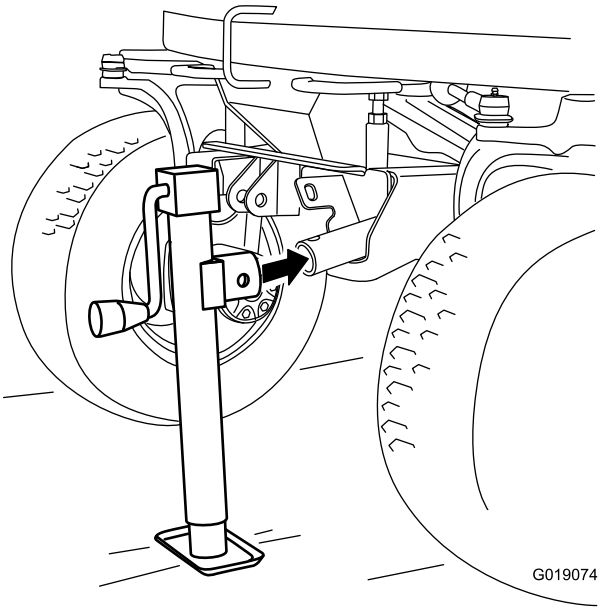

Figure 6

3. Insert the tethered pin (not shown) through the top hole of the jack hub and the hole in the hub of the jack bracket.
4. Turn the crank on the jack to raise or lower the machine.

Note: You may need to lower the front-attach bracket (on a machine with a Quick-Attach System) to allow for clearance for installing the jack bracket and operating the jack.

Important: Always use jack stands with the jack.

Storage

1. Hook the hub of the jack onto the tab of the jack storage bracket (Figure 7) or onto the tab of the jack bracket (Figure 8).

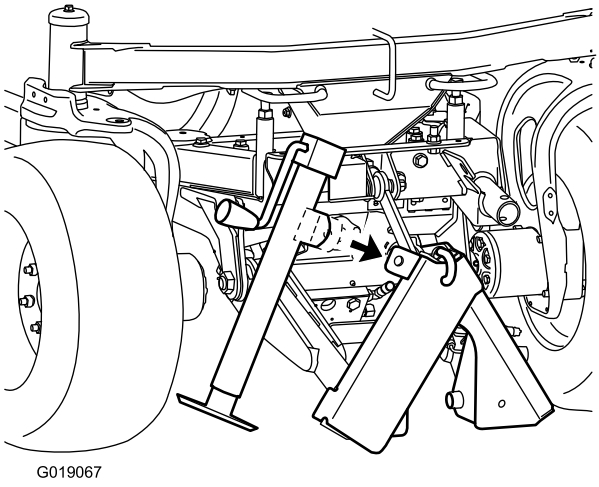

Figure 7
With Quick-Attach System

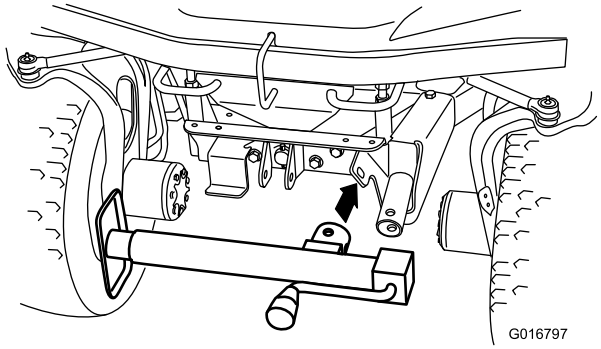

Figure 8
Without Quick-Attach System

2. Insert the tethered pin (not shown) through the side hole of jack hub and the hole in the tab, and secure the jack with the bungee (Figure 9 or Figure 10).

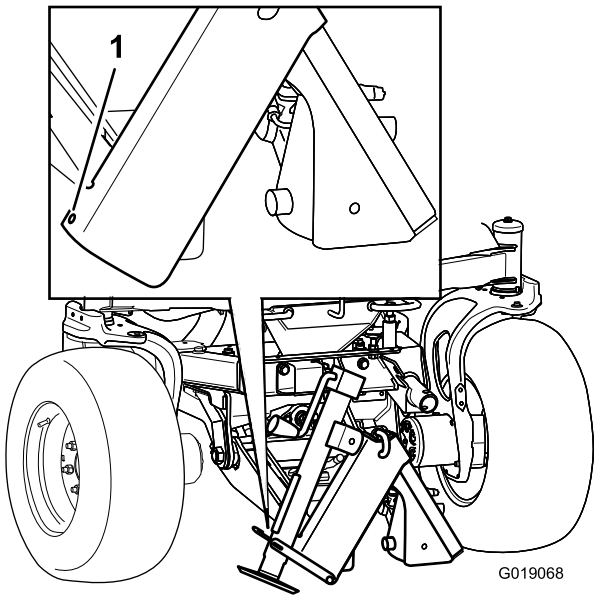

Figure 9
With Quick-Attach System

1. Hook the bungee end here.

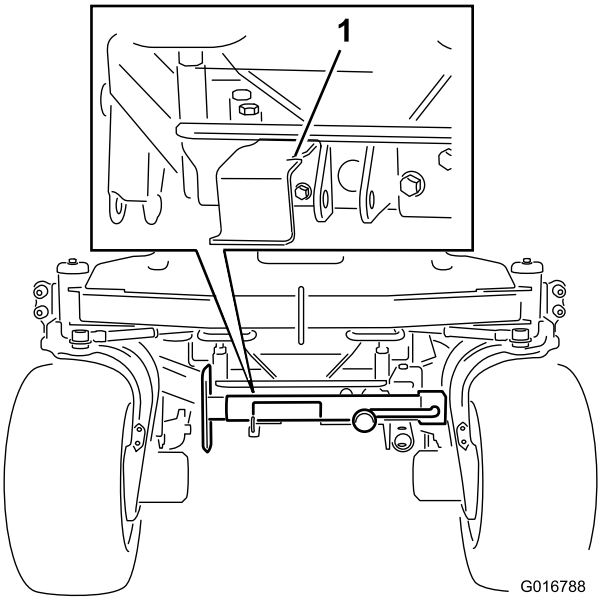

Figure 10
Without Quick-Attach System

1. Hook the bungee end here.

Notes:

Notes:



Count on it.