FORM NO. 3318–494

TORO®

MODEL NO. 04487

INSTALLATION INSTRUCTIONS

WIDE WIEHLE ROLLER KIT
(For Greensmaster® 3200)

1. Remove (2) shoulder bolts securing traction unit pull frame to cutting unit (Fig. 1) .

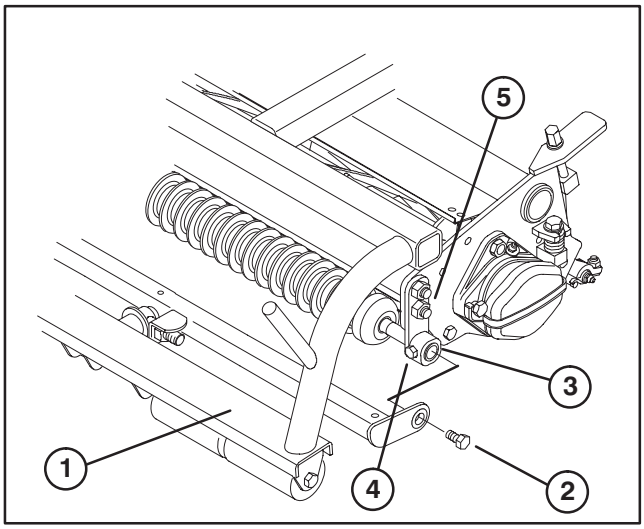

Figure 1

1. Pull frame
2. Shoulder bolt
3. Roller bracket
4. Capscrew
5. Capscrews and locknuts

2. Loosen (2) capscrews securing ends of roller shaft to roller brackets (Fig. 1).

3. Remove (2) capscrews and locknuts securing left front roller bracket to side plate (Fig. 1).

Note: The right roller bracket has an eccentric bolt for leveling roller to bedknife.

4. Remove existing roller.

5. Insert new roller into roller brackets (Fig. 2).

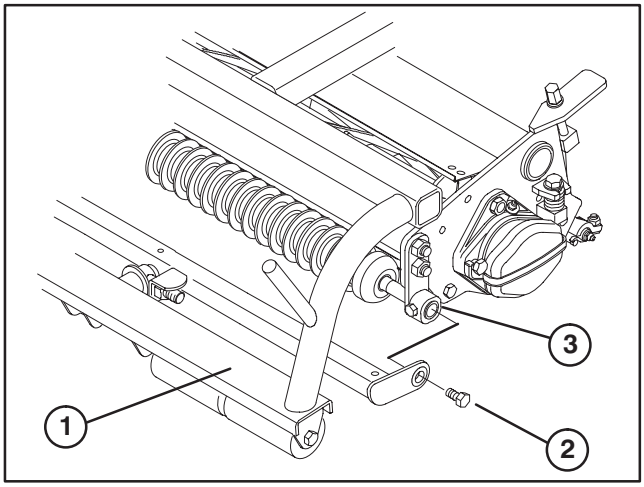

Figure 2

1. Pull frame
2. Shoulder bolt
3. Roller bracket

6. Secure left front roller bracket to side plate with (2) capscrews and locknuts previously removed.

7. Center roller between roller brackets.

8. Tighten each capscrew securing roller shaft ends to roller brackets.

9. Secure traction unit pull frame to cutting unit with (2) shoulder bolts previously removed.

10. After roller installation is completed, check level of front roller per instructions in Operator's Manual.

11. Grease roller with No. 2 multi–purpose lithium base grease.

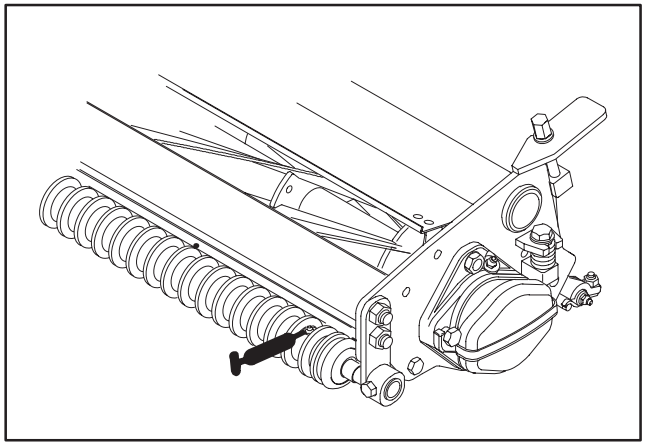

Figure 3

© The TORO Company – 1996