FORM NO. 3315–964

TORO®

*Helping you put quality into play.* ™

MODEL NO. 30569–30001 & UP

OPERATOR'S MANUAL

# GUARDIAN® 62" RECYCLER®



TORO

THIS UNIT CONFORMS TO ANSI B71.4 – 1984

To assure maximum safety, optimum performance, and to gain knowledge of the product, it is essential that you or any other operator of the machine read and understand the contents of this manual before the engine is ever started. Pay particular attention to the SAFETY INSTRUCTIONS highlighted by this symbol —

The safety alert symbol means CAUTION, WARNING or DANGER — personal safety instruction. Failure to comply with the instruction may result in personal injury.

©The Toro Company — 1993

# FOREWORD

The Guardian® 62" Recycler® Cutting Deck has advanced concepts in engineering, design and safety; and if maintained properly, will give excellent service.

Since this is a high–quality product, Toro is concerned about the future use of the machine and safety of the user. Therefore, read this manual to familiarize yourself with proper set–up, operation and maintenance instructions. The major sections of the manual are:

1. Safety Instructions
2. Set–up Instructions
3. Before Operating
4. Operation
5. Lubrication
6. Maintenance

Certain information in this manual is emphasized. DANGER, WARNING and CAUTION identify personal safety related information. IMPORTANT identifies mechanical information demanding special attention. Be sure to read this directive because it deals with the possibility of damaging a part or parts of the machine. NOTE identifies general information worthy of special attention.

Whenever you have questions or need service, contact your local authorized Toro Distributor. In addition to having a complete line of accessories and professional turf care service technicians, the distributor has a complete line of genuine TORO replacement parts to keep your machine operating properly. Keep your TORO all TORO. Buy genuine TORO parts and accessories.

# TABLE OF CONTENTS


| | Page |
|---|---|
| **SAFETY INSTRUCTIONS** | 3–4 |
| **SAFETY AND INSTRUCTION DECALS** | 5 |
| **SPECIFICATIONS** | 6 |
| **LOOSE PARTS** | 6 |
| **SET–UP INSTRUCTIONS** | 7–11 |
| Install Castor Wheel Assemblies | 7 |
| Install Lift Arms to Traction Unit | 7 |
| Connect Lift Arms to Cutting Unit | 8 |
| Connect PTO Shaft to Cutting Unit Gear Box | 8 |
| Mount Counterbalance Manifold | 8 |
| Mount Rear Weights | 11 |
| **BEFORE OPERATING** | 12–13 |
| Check Lubricant in Gear Box | 12 |
| Adjusting Height–of–Cut | 12 |
| Adjusting Skids | 13 |
| Grease Cutting Unit | 13 |
| **OPERATING INSTRUCTIONS** | 13 |
| Operating Tips | 13 |
| **LUBRICATION** | 14 |
| Grease Bearings, Bushings and Gear Box | 14 |
| **MAINTENANCE** | 15–19 |
| Trouble Shooting | 15 |
| Separating Cutting Unit from Traction Unit | 16 |
| Mounting Cutting Unit to Traction Unit | 16 |
| Replacing Drive Belt | 16 |
| Servicing Front Bushings in Castor Arms | 17 |
| Servicing Castor Wheels and Bearings | 17 |
| Removing Cutter Blades | 18 |
| Inspecting and Sharpening Blades | 18 |
| Correcting Cutting Unit Mismatch | 19 |
| **IDENTIFICATION AND ORDERING** | 20 |
| **HYDRAULIC SCHEMATIC** | 21 |
| **MAINTENANCE CHART** | 22–23 |
| **THE TORO PROMISE** | Back Cover |

# SAFETY INSTRUCTIONS

**The safety alert symbol means CAUTION, WARNING or DANGER — "personal safety instruction". Read and under stand the instruction because it has to do with safety. Failure to comply with the instruction may result in personal injury.**

**Hazard control and accident prevention are dependent upon the awareness, concern, and proper training of the personnel involved in the operation, transport, maintenance, and storage of the machine. Improper use or maintenance of the machine can result in injury or death. To reduce the potential for injury or death, comply with the following safety instructions.**

**WARNING:** Engine exhaust contains carbon monoxide which is an odorless, deadly poison. Carbon monoxide is also known to the State of California to cause birth defects. Do not run engine indoors or in an enclosed area.

## BEFORE OPERATING

**1.** Read and understand the contents of this Operator's Manual before operating the machine. Become familiar with all controls and know how to stop quickly. A free replacement manual is available by sending complete Model and Serial Number to:

The Toro Company
8111 Lyndale Avenue South
Minneapolis, Minnesota 55420–1196

**2.** Never allow children to operate the machine. Do not allow adults to operate machine without proper instruction. Only trained operators who have read this manual should operate this machine.

**3.** Never operate the machine when under the influence of drugs or alcohol.

**4.** Remove all debris or other objects that might be picked up and thrown by the cutter blades. Keep all bystanders away from the mowing area.

**5.** Keep all shields and safety devices in place. If a shield, safety device or decal is illegible or damaged, repair or replace it before operation is commenced. Also tighten any loose nuts, bolts and screws to assure machine is in safe operating condition.

**6.** Do not operate machine while wearing sandals, tennis shoes, sneakers or shorts. Also, do not wear loose fitting clothing which could get caught in moving parts. Always wear long pants and substantial shoes. Wearing safety glasses, safety shoes and a helmet is advisable and required by some local ordinances and insurance regulations.

**7.** Check interlock switches daily for proper operation (Refer To Section in Traction Unit Operator's Manual on Checking Interlock Switches). Do not rely entirely on safety switches -shut off engine before getting off seat. If a switch fails, replace it before operating the machine. The interlock system is for your protection, so do not bypass it. Replace all interlock switches every two years. Interlock switches should be adjusted so:

A. Engine cannot be started unless traction pedal is released (neutral position) and PTO lever is DISENGAGED (off position).

B. Engine stops if operator gets off seat when traction pedal is depressed.

C. Engine stops if operator gets off seat when PTO lever is ENGAGED (on position).

**8.** Fill fuel tank before starting the engine. Avoid spilling any fuel. Since fuel is flammable, handle it carefully.

A. Use an approved fuel container.

B. Do not fill tank while engine is hot or running.

C. Do not smoke while handling gasoline.

D. Fill fuel tank outdoors and up to about one inch from top of the tank, not the filler neck.

E. Wipe up any spilled gasoline.

## WHILE OPERATING

**9.** Do not run the engine in a confined area without adequate ventilation. Exhaust fumes are hazardous and could possibly be deadly.

**10.** Maximum seating capacity is one person. Never carry passengers.

**11.** Sit on the seat when starting the engine and operating the machine.

**12.** This product may exceed noise levels of 85 dB(A) at the operator position. Ear protectors are recommended for prolonged exposure to reduce the potential of permanent hearing damage.

**13.** Before starting the engine:

A. Engage the parking brake.

B. Ensure traction pedal is in neutral and PTO is in the OFF, disengaged position.

C. After engine is started, release parking brake and keep foot off traction pedal. Machine must not move. If movement is evident, the neutral return mechanism is adjusted incorrectly; therefore, shut engine off and adjust until machine does not move when traction pedal is released.

# SAFETY INSTRUCTIONS

**14.** Using the machine demands attention, and to prevent loss of control:

A. Mow only in daylight or when there is good artificial light.

B. Drive slowly and watch for holes or other hidden hazards.

C. Do not drive close to a sand trap, ditch, creek or other hazard.

D. Reduce speed when making sharp turns and when turning on hillsides.

E. Avoid sudden starts and stops.

F. Before backing up, look to the rear and assure no one is behind the machine.

G. Watch out for traffic when near or crossing roads. Always yield the right-of-way.

**15.** If engine stalls or machine loses headway and cannot make it to the top of a slope, do not turn machine around. Always back slowly straight down the slope.

**16. DON'T TAKE AN INJURY RISK!** When a person or pet appears unexpectedly in or near the mowing area, **STOP MOWING**. Careless operation, combined with terrain angles, ricochets, or improperly positioned guards can lead to thrown object injuries. Do not resume mowing until area is cleared.

**17.** Never raise the cutting unit while the blades are rotating.

**18.** If the cutting blades strike a solid object or the machine vibrates abnormally, disengage PTO, move throttle to SLOW, set parking brake and shut engine off. Remove key from switch to prevent possibility of accidental starting. Check cutting unit and traction unit for damage and malfunctioning parts. Repair any damage before restarting the engine and operating the cutting unit. Be sure blades are in good condition and blade bolts are tight.

**19.** Cut grass slopes carefully. Do not start, stop, or turn suddenly.

**20.** Do not touch engine or muffler while engine is running or soon after it is stopped. These areas could be hot enough to cause a burn.

**21.** Before getting off the seat:

A. Move traction pedal to neutral position and remove foot from pedal.

B. Set the parking brake and disengage the PTO.

C. Shut the engine off and remove the key from the ignition switch. Wait for all movement to stop before getting off the seat.

**22.** Lower the cutting unit to the ground and remove key from ignition switch whenever machine is left unattended.

## MAINTENANCE

**23.** Remove key from ignition switch to prevent accidental starting of the engine when servicing, adjusting or storing the machine.

**24**. Perform only those maintenance instructions described in this manual. If major repairs are ever needed or assistance is desired, contact an Authorized Toro Distributor.

**25.** To reduce potential fire hazard, keep the engine free of excessive grease, grass, leaves and accumulations of dirt.

**26.** Be sure machine is in safe operating condition by keeping nuts, bolts and screws tight. Check the blade mounting bolts and nuts frequently to be sure they are tightened to specification.

**27.** Make sure all hydraulic line connectors are tight, and all hydraulic hoses and lines are in good condition before applying pressure to the system.

**28.** Keep body and hands away from pin hole leaks in hydraulic lines that eject high pressure hydraulic fluid. Use cardboard or paper to find hydraulic leaks. Hydraulic fluid escaping under pressure can penetrate skin and cause injury. Fluid accidentally injected into the skin must be surgically removed within a few hours by a doctor familiar with this form of injury or gangrene may result.

**29.** Before disconnecting or performing any work on the hydraulic system, all pressure in system must be relieved by stopping engine and lowering cutting unit to the ground.

**30.** If the engine must be running to perform a maintenance adjustment, keep hands, feet, clothing and other parts of the body away from the cutting unit blades and other moving parts.

**31.** Do not overspeed the engine by changing governor settings. To be sure of safety and accuracy, have an Authorized TORO Distributor check maximum engine speed with a tachometer.

**32.** Engine must be shut off before checking oil or adding oil to the crankcase.

**33.** At the time of manufacture the cutting unit conformed to safety standards in effect for riding mowers. Therefore, to ensure optimum performance and safety, always purchase genuine TORO replacement parts and accessories to keep the Toro all TORO. NEVER USE "WILL-FIT" REPLACEMENT PARTS AND ACCESSORIES MADE BY OTHER MANUFACTURERS. Look for the TORO logo to assure genuineness. Using unapproved replacement parts and accessories could void the warranty of The Toro Company.

# SAFETY AND INSTRUCTION DECALS

The following decals are installed on the machine. If any become damaged or illegible, replace it. The decal part number is listed below and in your parts catalog. Replacements can be ordered from your Authorized Toro Distributor.




ON FRONT CORNERS OF CUTTING DECK (2)
(Part No. 43-8480)




ON GEAR BOX MOUNTING PLATE
(Part No. 70-2560)

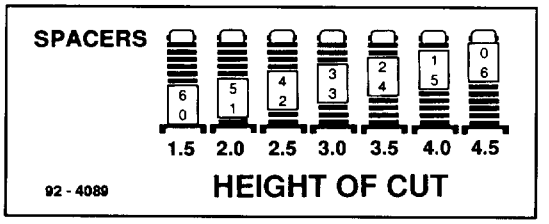


ON CASTER ARM
(Part No. 92-4089)

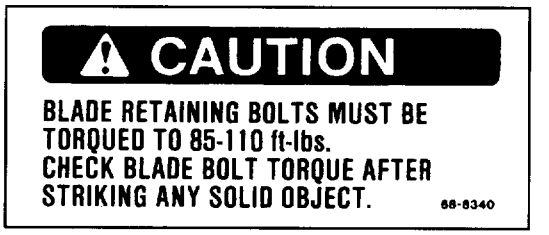


ON FRONT OF CUTTING DECK
(Part No. 68-8340)

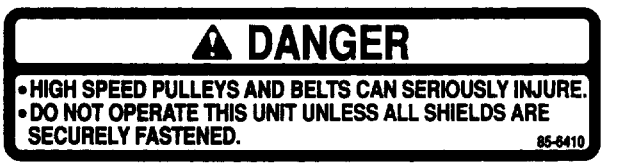


ON TOP OF CUTTING DECK, UNDER COVERS (3)
(Part No. 85-6410)

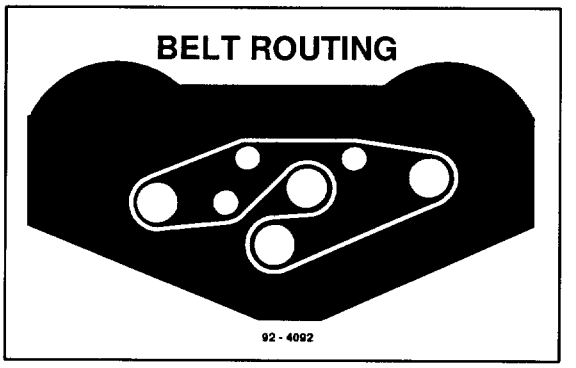


ON TOP OF DECK, UNDER CENTER COVER
(Part No. 92-4092)




ON FRONT OF CUTTING DECK
(Part No. 92-5647)

# SPECIFICATIONS

**Width of Cut:** 62 in.

**Height–of–Cut:** Adjustable from 1–1/2" to 4–1/2" in 1/2" increments.

**Cutter Housing:** 4" deep housing is made of 12 gauge steel and reinforced with 10 gauge channel and plates.

**Cutting Unit Drive:** Isolation mounted gear box on cutting unit is driven by PTO shaft. Power is transmitted to the blades by one hex "AA" section belt. Spindle shafts are 1 inch diameter and supported by two greaseable, tapered roller bearings.

**Cutting Unit Blades:** Three 21–3/4" long and 1/4" thick heat treated steel, Recycler blades .

**Castor Wheels:** Front and rear castor wheels have 8 in. x 3.50 in. hard rubber tires and roller bearings.

**Cutting Unit Lift:** Independent lift arms and hydraulic weight transfer provide deck flotation.

**Weight:** 340 lb.

**Specifications and design subject to change without notice.**

# LOOSE PARTS

**NOTE:** Use this chart as a checklist to assure all parts have been received. Without these parts, total set–up cannot be completed.

| Description | Qty. | Use |
|---|---|---|
| Front Castor Wheel Assembly | 2 | Install Castor Wheel Assemblies. |
| Rear Castor Wheel Assembly | 2 | |
| R.H. Lift Arm | 1 | Mount to Traction Unit Pivot Brackets |
| L.H. Lift Arm | 1 | |
| Capscrews 7/16 – 14 x 3" lg. | 4 | Connect Lift Arms to Cutting Unit. |
| Flatwasher 15/32 I.D. x 59/64" O.D. | 4 | |
| Flange Nuts 7/16 – 14 | 4 | |
| Tee Fitting | 1 | Install Manifold Block |
| Straight Fitting | 1 | |
| Elbow Fitting | 1 | |
| Hydraulic Tube | 1 | |
| Hydraulic Tube | 1 | |
| Manifold Block Assembly | 1 | |
| Manifold Bracket | 1 | |
| Flange Head Capscrew 5/16–18 x 5/8" lg. | 4 | |
| Locknut 5/16–18 | 2 | |
| Spacers | 2 | |
| Flat Washers | 2 | |
| Capscrew 1/4–20 x 4" lg. | 2 | |
| 45° Fitting | 1 | |
| Straight Fitting | 1 | |
| Hydraulic Hose | 1 | |
| Hose Clamp | 2 | |
| Hydraulic Hose | 1 | |
| Hose Clamp | 2 | |
| Operator's Manual | 1 | Read Before Operating Machine. |
| Parts Catalog | 1 | |
| Registration Card | 1 | Fill Out And Return To Toro. |

# SET–UP INSTRUCTIONS

## INSTALL CASTOR WHEEL ASSEMBLIES

**(Fig. 1 & 2)**

The thrust washers, spacers and tensioning caps have been installed on the castor wheel spindles for shipping.

**1.** Remove tensioning caps from spindle shafts and slide off spacers and thrust washers.

**2.** Slide spacers onto castor spindle to get desired height–of–cut: refer to Height–of–Cut Chart, Page 12. Slide a thrust washer onto spindle, push round castor spindle through front castor arm and hex castor spindle through rear castor arm. Install another thrust washer and remaining spacers onto spindle and install tensioning cap to secure assembly.

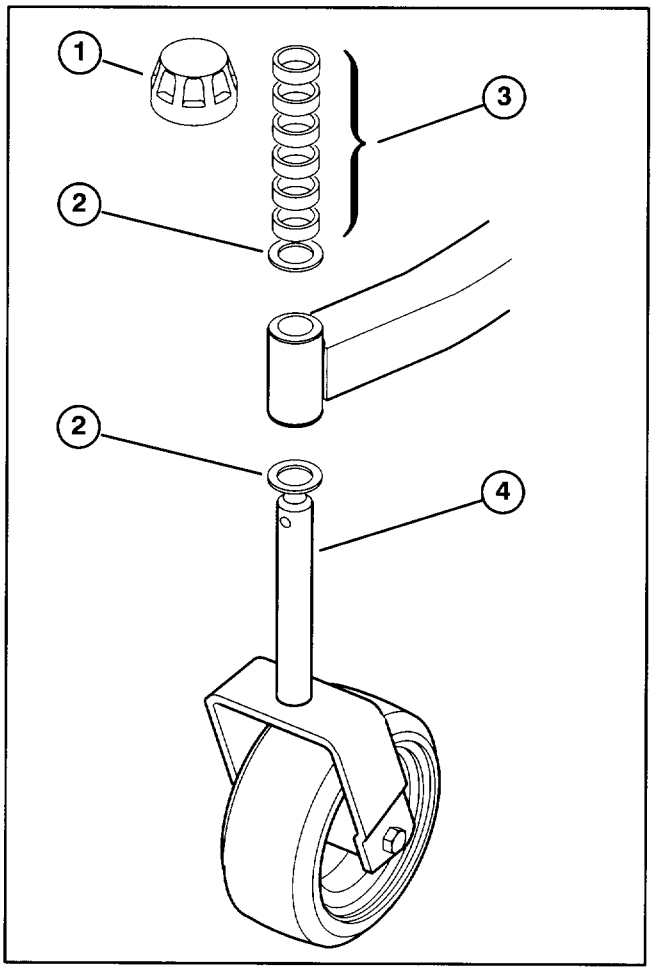


**Figure 1**

1. Tensioning cap
2. Thrust washers
3. Spacers
4. Front castor spindle

**IMPORTANT: Thrust washers – not the spacers – must contact the top and bottom of the castor arm.**

**3.** Assure all four castor wheels are set at same height–of–cut and roll cutting unit off pallet.

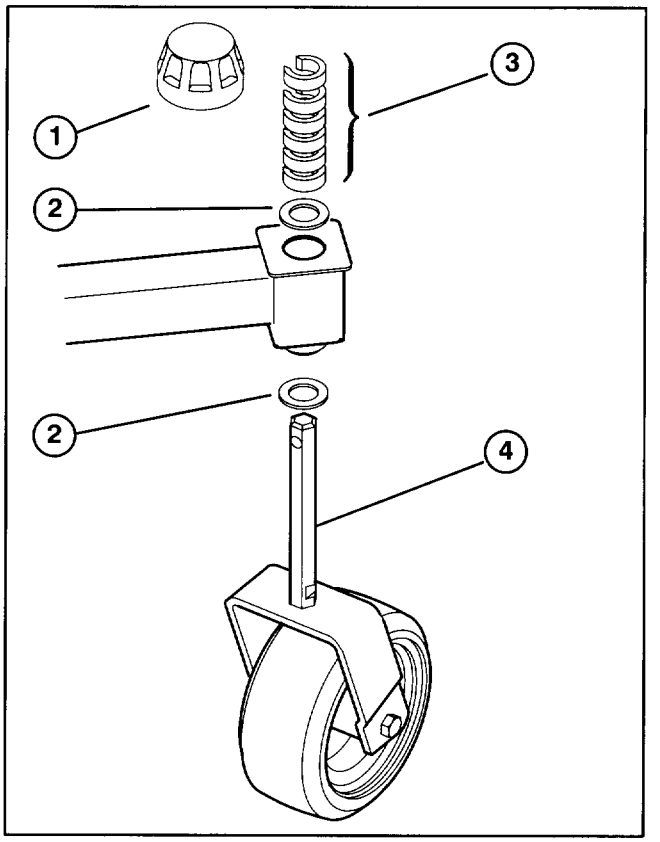


**Figure 2**

1. Tensioning cap
2. Thrust washers
3. Spacers
4. Rear castor spindle

## INSTALL LIFT ARMS TO TRACTION UNIT

**(Fig. 3 & 4)**

**1.** Unhook brake return springs from holes in traction unit lift arms.

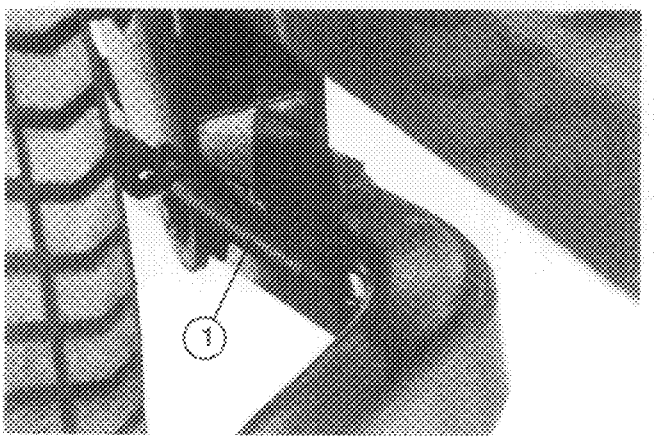


**Figure 3**

1. Brake return spring

**2.** Remove cotter pins and pivot pins securing lift cylinders to rear of lift arms.

**3.** Remove cotter pins and pivot pins securing lift arms to pivot brackets and remove lift arms.

**4.** Using pivot pins and cotter pins previously removed, install new lift arms to pivot brackets and lift cylinders reversing procedure. Lift arms to be mounted with ball joint ends positioned outward.

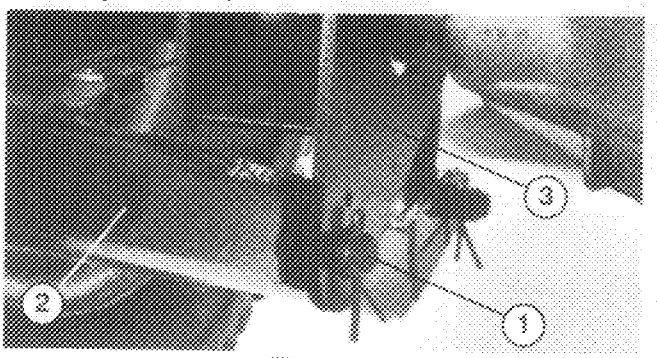


Figure 4

1. Pivot pin
2. Lift arm
3. Lift arm pivot bracket

## CONNECT LIFT ARMS TO CUTTING UNIT (Fig. 5–6)

**1.** Move cutting unit into position in front of traction unit.

**2.** Measure distance from end of each lift arm to center of ball joint (grease fitting). Distance should be 2.25". If distance is not 2.25", loosen jam nut securing ball joint to lift arm and rotate ball joint in or out until distance is attained. Do not tighten jam nuts at this time.

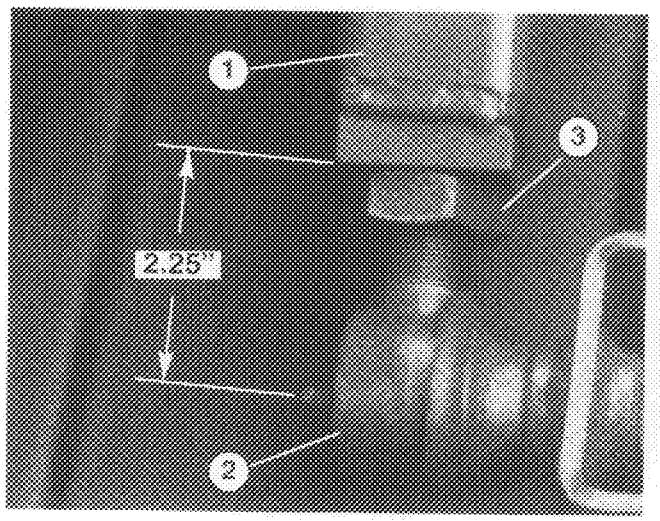


Figure 5

1. Lift Arm
2. Ball Joint
3. Jam Nut

**3.** Move lift lever to FLOAT position. Push lift arms down until holes in ball joint mounts line up with holes in castor arms.

**4.** Secure ball joint mounts to each castor arm with (2) 7/16 – 14 x 3" lg. capscrews, 15/32" I.D. x 59/64" O.D. flatwashers and 7/16 – 14 flange nuts. Flatwashers to be positioned to outside of castor arm (Fig. 6).

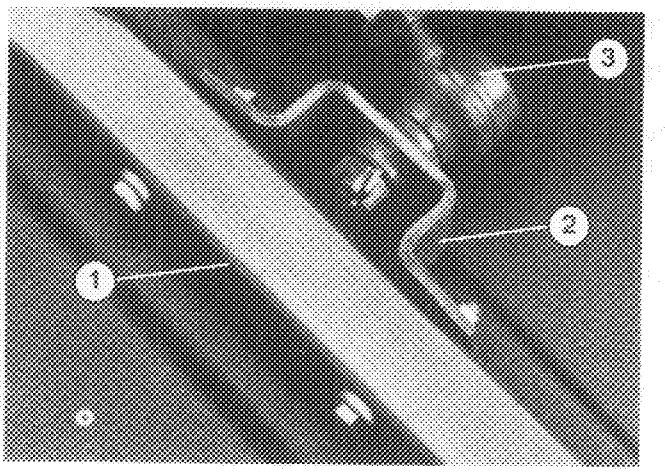


Figure 6

1. Castor Arm
2. Ball Joint Mount
3. Ball Joint

**5.** Tighten large jam nut securing ball joint to lift arm (Fig. 5). When tightening jam nut, hold ball joint straight to permit proper oscillation during raising and lowering of cutting unit.

## CONNECT PTO SHAFT TO CUTTING UNIT GEAR BOX (Fig. 7)

**1.** Slide male PTO shaft into female PTO shaft. Align mounting holes in gear case input shaft with holes in PTO shaft and slide together. Secure with roll pin.

**Note:** On Groundsmaster 223–D (Diesel) or GM 224 also tighten bolts and locknuts.

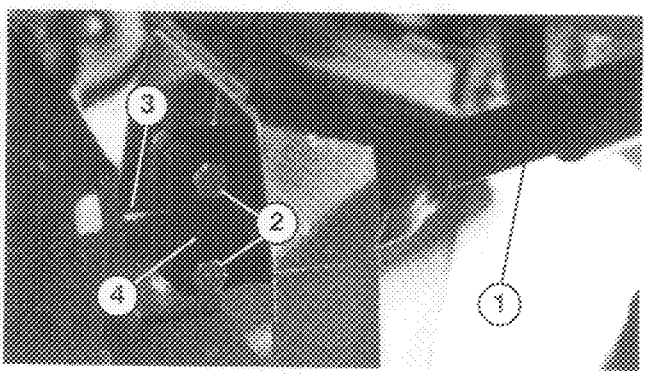


Figure 7

1. PTO shaft
2. Bolts and locknuts
3. Gearcase input shaft
4. Roll pin

## MOUNT COUNTERBALANCE MANIFOLD (Fig. 8–16)

**1.** Move lift lever to FLOAT position. Make sure cutting unit is lowered all the way to the floor.

**2.** On gas models only, remove (2) capscrews and washers securing fuel pump to right frame channel. Also, remove capscrew, washer and nut securing fuel filter R–clamp to right frame channel. Retain mounting fasteners as components will be reinstalled later.

# SET–UP INSTRUCTIONS

**3.** Remove hose clamps securing hoses to 3–way fitting at rear of lift valve. Remove hoses.

**4.** Mount the hoses to new T–fitting with hose clamps removed, as shown in figure 8.

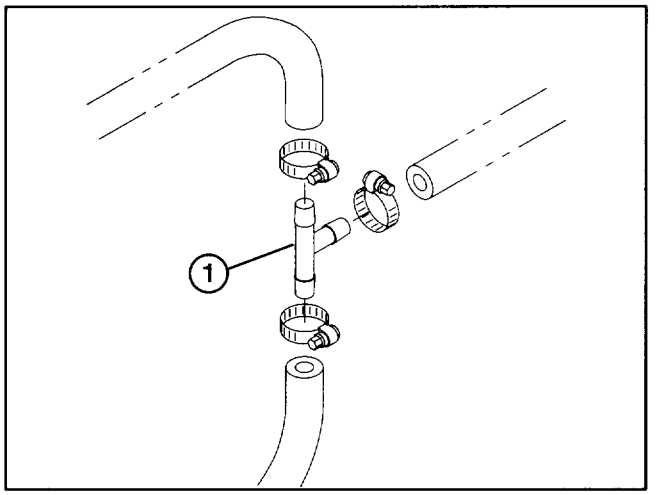


**Figure 8**
1. Tee fitting

**5.** Loosen (2) capscrews securing lift valve to frame channel (Fig. 9).

**6.** Remove 3–way fitting and O–ring from rear of lift valve.

**IMPORTANT:** Before instaling any hydraulic fittings, make sure O–rings are lubricated with hydraulic oil and positioned correctly.

**7.** Install new straight fitting and O–ring into rear of lift valve (Fig. 9).

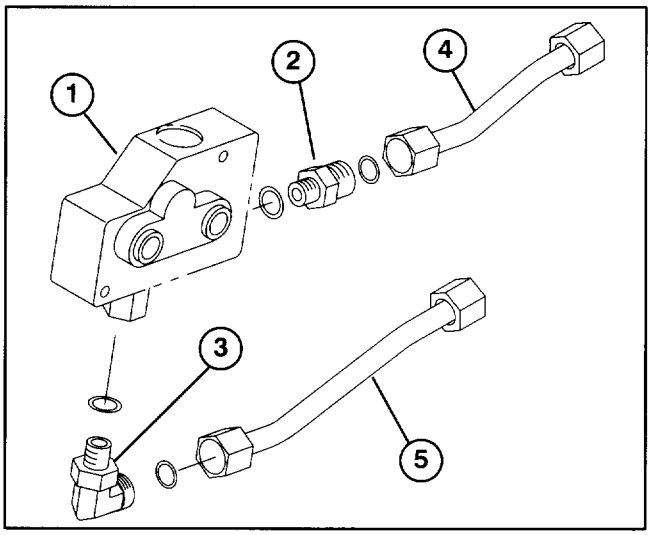


**Figure 9**
1. Lift valve
2. Straight fitting
3. Elbow fitting
4. Shorter hydraulic tube
5. Longer hydraulic tube

**8.** Disconnect hydraulic hose from elbow fitting on bottom of lift valve. Remove elbow fitting from lift valve.

**9.** Install new elbow fitting and O–ring into bottom of lift valve (Fig. 9).

**10.** Loosely install shorter hydraulic tube to straight fitting on rear of lift valve (Fig. 9).

**11.** Loosely install longer hydraulic tube to elbow fitting on bottom of lift valve (Fig. 9).

**12.** Mount manifold block assembly to manifold bracket with (2) 5/16–18 x 5/8" lg. flange head capscrews (Fig. 10). Torque screws to 145–190 in. lbs.

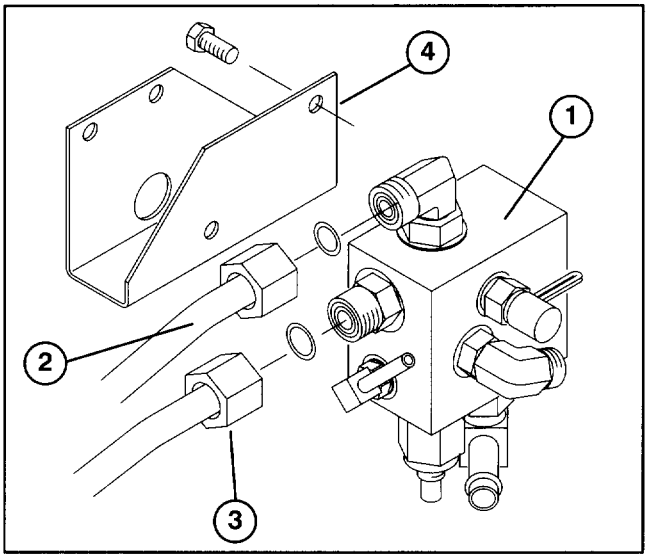


**Figure 10**
1. Manifold block
2. Shorter hydraulic tube
3. Longer hydraulic tube
4. Manifold bracket

**13.** Loosely install other end of shorter hydraulic tube to elbow fitting on top of manifold block (Fig. 10).

**14.** Loosely install other end of longer hydraulic tube to straight fitting on front of manifold block (Fig. 10).

**15.** Using lower set of holes in right side frame member, mount manifold bracket with (2) 5/16–18 x 5/8" lg. flange head capscrews and locknuts (Fig. 11).

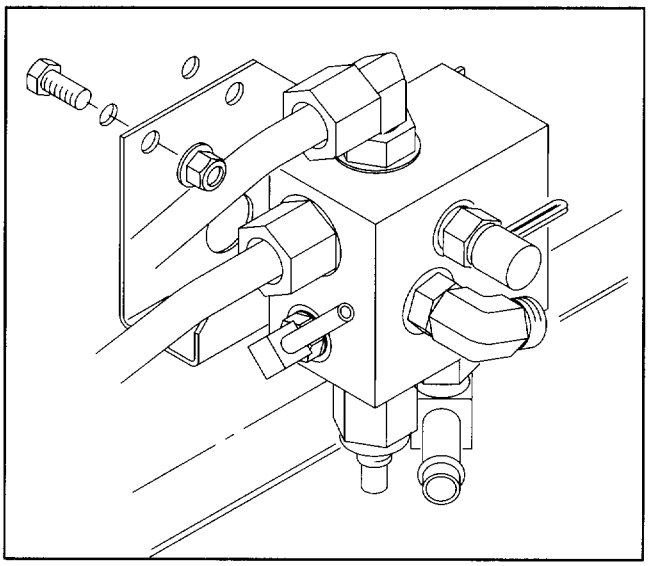

**Figure 11**

**16.** Tighten fittings securing both ends of hydraulic tubes to lift valve and manifold block.

# SET–UP INSTRUCTIONS

**17.** Tighten capscrews securing lift valve to frame channel.

**18.** On gas models only, remount fuel pump to frame channel with (2) spacers, flat washers, previously removed washer and new 1/4–20 x 4" lg. capscrews, as shown in figure 12.

**NOTE:** Fuel pump fittings may have to be repositioned to align with fuel lines.

**19.** Also on gas models, remove one of the locknuts securing right front engine mount to frame support. Mount fuel filter R–clamp on capscrew and reinstall locknut.

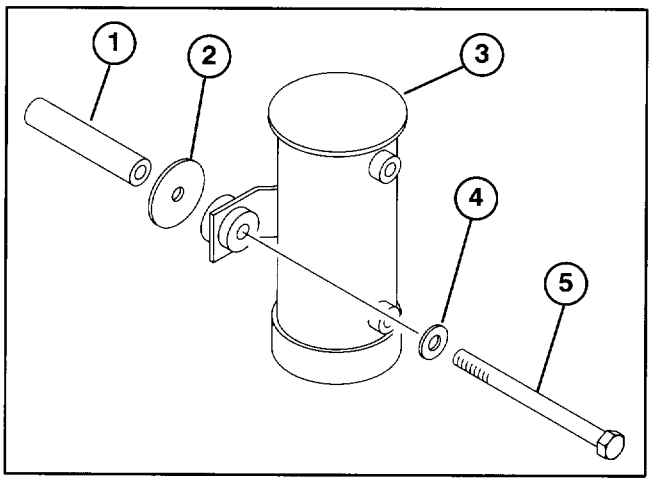


**Figure 12**

1. Spacer
2. Flat washer
3. Fuel pump
4. Existing washer
5. Capscrew

**20.** Connect hydraulic hose, previously removed from elbow fitting on bottom of lift valve, to elbow fitting on side of manifold block (Fig. 13).

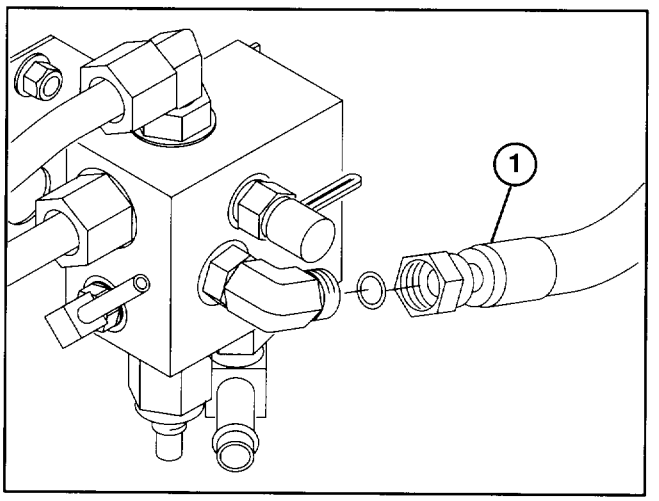


**Figure 13**

1. Hydraulic hose

**21.** Place a drain pan under rear of transmission.

**NOTE:** On traction units equipped with an oil filter adapter on rear of transmission, use steps 22 thru 26. Other machines use steps 27 thru 32.

**22.** Remove large and small plug from right side of transmission oil filter adapter.

**23.** Install 45° fitting into transmission oil filter adapter. Fitting to be positioned so opening points toward manifold block (Fig. 14).

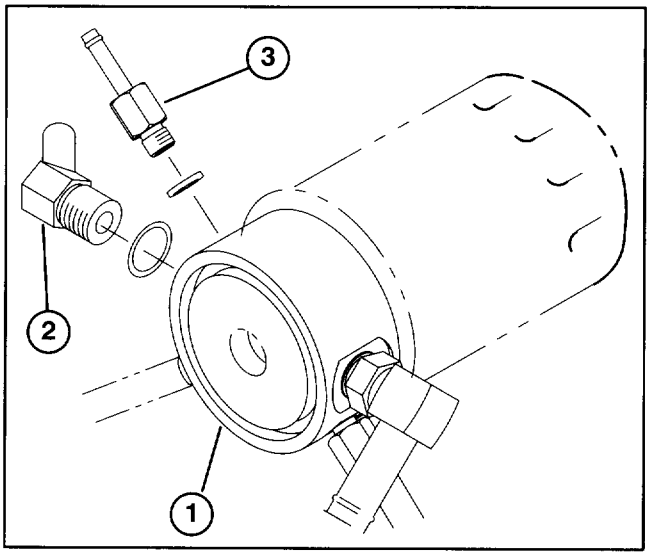


**Figure 14**

1. Transmission oil filter adapter
2. 45° fitting
3. Straight fitting

**24.** Install straight fitting into transmission oil filter adapter (Fig. 14).

**25.** Install hydraulic hose to 90° fitting on front of manifold block and straight fitting on oil filter adapter with (2) hose clamps.

**26.** Cut remaining hydraulic hose to a length of 8". Install hose to 90° fitting on bottom of manifold block and 45° fitting on oil filter adapter with (2) hose clamps.

**27.** Disconnect left and right lift cylinder hoses and return hose from cross fitting on bottom of transmission (Fig. 15).

**28.** Remove cross fitting from transmission (Fig. 15).

**NOTE:** Special new cross fitting, Part No. 92–5640, is not included in loose parts, it must be purchased from your Authorized Toro Distributor.

**29.** Install new special fitting (92–5640) into bottom of transmission (Fig. 16). Position fitting so side with two openings points toward right side of machine.

**30.** Reinstall lift cylinder hoses and return hose to new cross fitting. Position hoses as shown in figure 16.

**31.** Install hydraulic hose to 90° fitting on front of manifold block and remaining opening on side of cross fitting with (2) hose clamps. Reposition 90° fitting, as required, for hose connection.

# SET–UP INSTRUCTIONS

**32.** Install remaining hose to 90° fitting on bottom of manifold block and remaining opening on cross fitting with (2) hose clamps. Reposition 90° fitting, as required, for hose connection.

**33.** Replenish oil in transmission, as required.

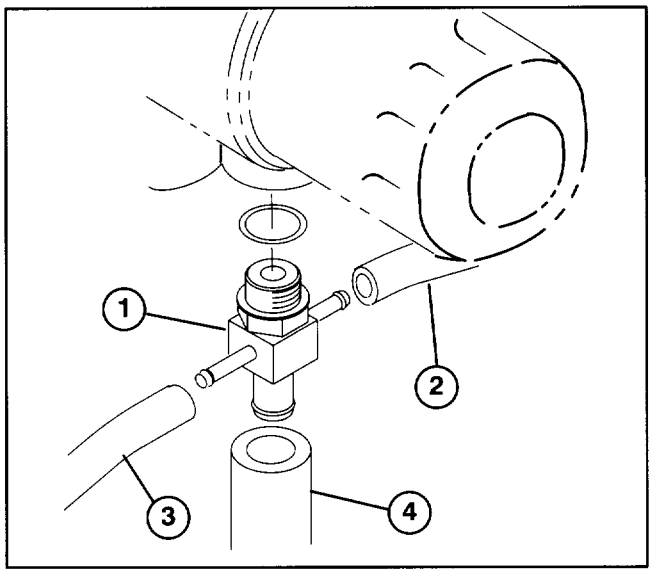


**Figure 15**

1. Cross fitting
2. Right lift cylinder hose
3. Left lift cylinder hose
4. Return hose

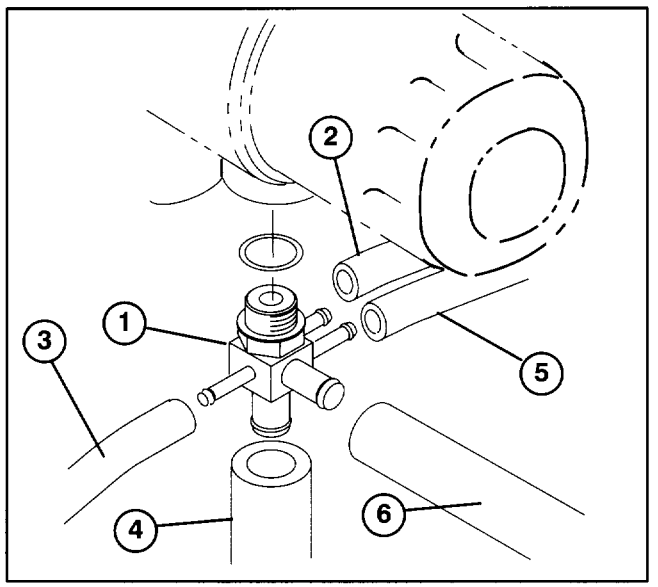


**Figure 16**

1. Cross fitting (92–5640)
2. Right lift cylinder hose
3. Left lift cylinder hose
4. Return hose
5. Hose to manifold block
6. Hose to manifold block

**NOTE:** The test port is used to check hydraulic circuit pressure. Check pressure with lift lever in FLOAT position, engine running at high idle and hydraulic oil at its normal operating temperature (Fig. 17). Contact your local Toro distributor for assistance.

Normal counterbalance setting is 100 psi.

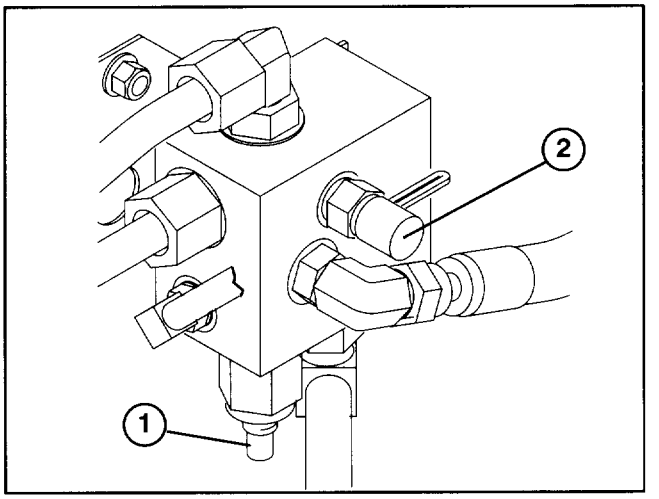


**Figure 17**

1. Adjusting screw
2. Test port

**NOTE:** The counterbalance has been pre–set at the factory and should not require adjusting. Rotating manifold screw to increase or decrease pressure will increase or decrease counterbalance (Fig. 17).

## MOUNT REAR WEIGHTS (Fig. 18)

**⚠ CAUTION**

- **Improper handling and instability of the machine may result without rear weight added to machine to counterbalance attachments.**
- **Improper handling and instability could cause serious injury.**
- **Mount 70 lb. rear weight on rear of 2 wheel drive Groundsmaster traction units**

**1.** Mount rear weights to back of machine as shown in figure 18. Order kit #24–5780 (includes 2–weights and hardware) from your Authorized Toro Distributor.

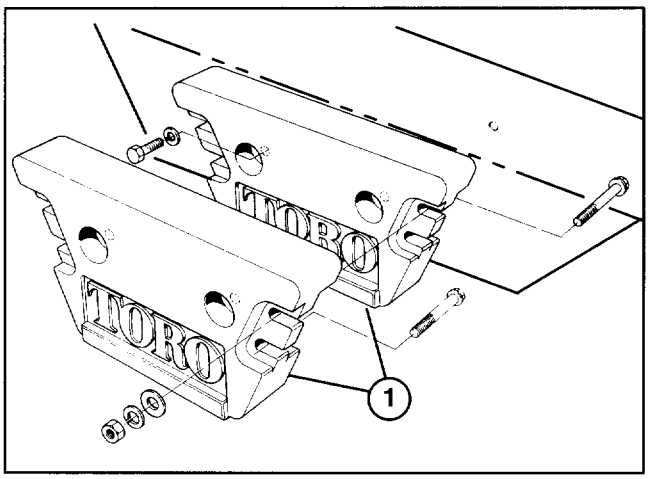


**Figure 18**

1. Rear weight

# BEFORE OPERATING

## CHECK LUBRICANT IN GEAR BOX

**(Fig. 19)**

The gear box in designed to operate on SAE 80–90 wt. gear lube. Although the gear box is shipped with lubricant from the factory, check the level before operating the cutting unit.

1. Position the machine and cutting unit on a level surface.

2. Remove check plug from side of gear box and make sure lubricant is up to bottom of hole. If level of lubricant is low, remove fill plug on top of gear case and add enough lubricant to bring it up to bottom of hole in side.

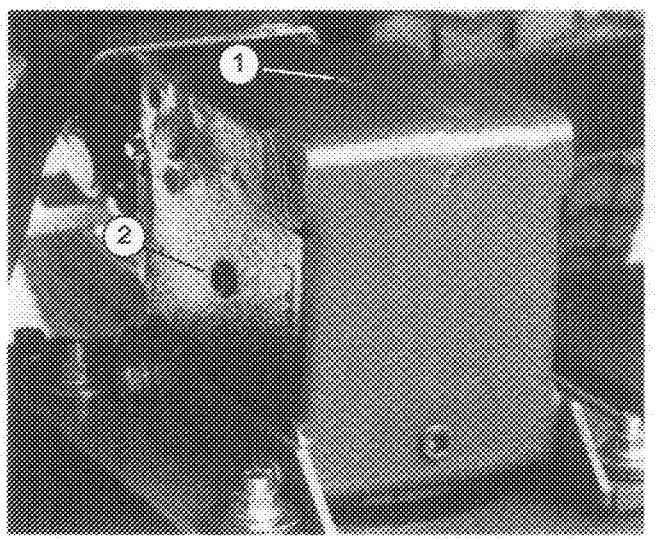


**Figure 19**

1. Filler Plug 2. Check Plug

## ADJUSTING HEIGHT–OF–CUT

**(Fig. 20–21)**

The height–of–cut is adjustable from 1–1/2 to 4–1/2 inches in 1/2 inch increments, by adding or removing an equal number of spacer from the front and rear castor forks. The height–of–cut chart below gives the combinations of spacers to use for all height–of–cut settings.

**Height–of–Cut Chart**

| Height–of–Cut Setting | Spacers Below Castor Arm | |
|---|---|---|
| | Front | Rear |
| 1–1/2 inch | 0 | 0 |
| 2 inch | 1 | 1 |
| 2–1/2 inch | 2 | 2 |
| 3 inch | 3 | 3 |
| 3–1/2 inch | 4 | 4 |
| 4 inch | 5 | 5 |
| 4–1/2 inch | 6 | 6 |

1. Start the engine and raise the cutting unit so height–of–cut can be changed. Stop engine after cutting unit is raised.

### FRONT CASTOR WHEELS

1. Remove tensioning cap from spindle shaft and slide spindle out of front castor arm. Remove washer from spindle shaft. Slide spacers onto spindle shaft to get desired height–of–cut, then slide washer onto shaft.

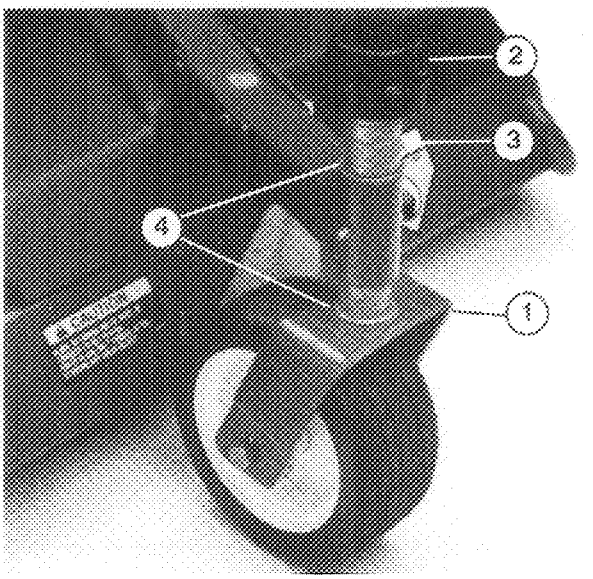


**Figure 20**

1. Front Castor Wheel 3. Spacers
2. Tensioning cap 4. Thrust Washers

2. Push castor spindle through front castor arm, install other thrust washer and remaining spacers onto spindle and install tensioning cap to secure assembly .

### REAR CASTOR WHEELS

1. Remove tensioning cap from spindle shaft.

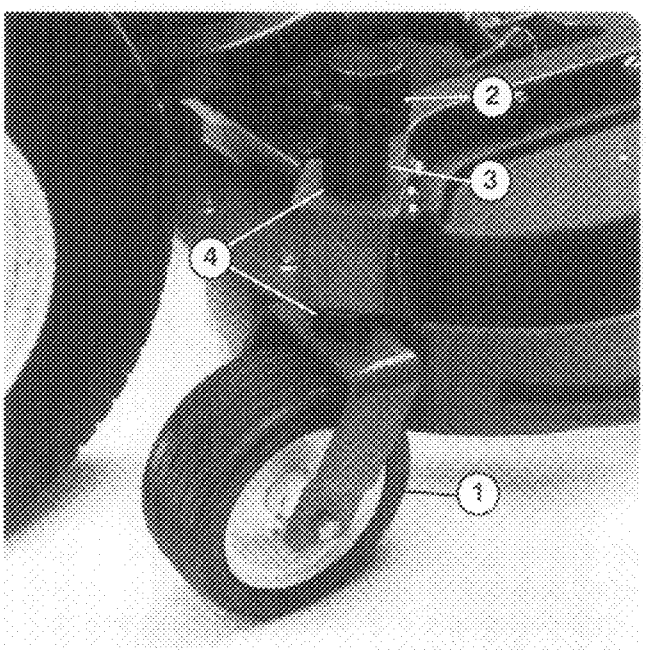


**Figure 21**

1. Rear Castor Wheel 3. Spacers
2. Tensioning cap 4. Thrust Washers

# BEFORE OPERATING

**Note:** Rear castor fork assembly does not need to be removed from castor arm to change height–of–cut.

**2.** Remove or add "C" shaped spacers at the narrow portion of the spindle shaft, below castor arm, to get desired height–of–cut. Make sure thrust washers – not the spacers – contact the top and bottom of the castor arm.

**3.** Install tensioning cap to secure assembly .

**4.** Assure all four castor wheels are set at same height–of–cut.

## ADJUSTING SKIDS (Fig. 22)

**1.** Adjust skids by removing flange nuts, positioning skids at desired position and reinstalling flange nuts.

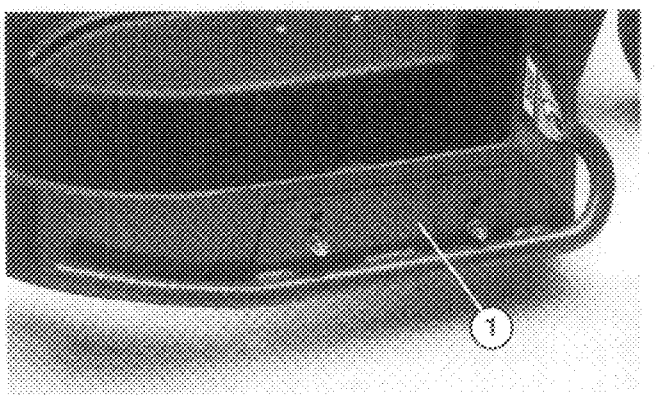


**Figure 22**
**1. Skid**

## GREASE CUTTING UNIT

Before the cutting unit is operated, it must be greased to assure proper lubricating characteristics: refer to Lubrication, page 14. Failure to properly grease the cutting unit will result in premature failure of critical parts.

# OPERATING INSTRUCTIONS

## OPERATING TIPS

**1.** MOW WHEN GRASS IS DRY–Mow either in the late morning to avoid the dew, which causes grass clumping or in late afternoon to avoid the damage that can be caused by direct sunlight on the sensitive, freshly mowed grass.

**2.** SELECT THE PROPER HEIGHT–OF–CUT SETTING TO SUIT CONDITIONS – Remove approximately one inch or no more than 1/3 of the grass blade when cutting. In exceptionally lush and dense grass you may have to raise your height–of–cut setting another notch.

**3.** MOWING IN EXTREME CONDITIONS – Air is required to cut and recut grass clippings in mower housing, so do not set height–of–cut too low or totally surround housing by uncut grass. Always try to have one side of the mower housing free from uncut grass, allowing air to be drawn into housing. When making an initial cut thru center of uncut area, operate machine slower and back up if mower starts to clog.

**4.** MOW AT PROPER INTERVALS – Under most normal conditions you'll need to mow approximately every 4–5 days. But remember, grass grows at different rates at different times. This means that in order to maintain the same height–of–cut, which is a good practice, you'll need to cut more frequently in early spring; as the grass growth rate slows in mid summer, cut only every 8–10 days. If you are unable to mow for an extended period due to weather conditions or other reasons, mow first with the height–of–cut at a high level; then mow again 2–3 days later with a lower height setting.

**5.** ALWAYS MOW WITH SHARP BLADES – A sharp blade cuts cleanly and without tearing or shredding the grass blades like a dull blade. Tearing and shredding causes the grass to turn brown at the edges which impairs growth and increases susceptibility to diseases.

**6.** STOPPING – If forward motion has to be stopped while cutting, a clump of grass clippings may be deposited on lawn. Follow this procedure for stopping while cutting:

A. With deck engaged, move onto a previously cut area.

B. Shift to neutral, move throttle control lever to SLOW position and rotate ignition key to OFF.

**7.** AFTER OPERATING – To assure optimum performance, clean underside of mower housing, especially around inserts (kickers) after each use. If residue is allowed to build up in mower housing and on inserts, cutting performance will decrease.

# LUBRICATION

## GREASE BEARINGS, BUSHINGS AND GEAR BOX (Fig. 23–26)

The cutting unit must be lubricated regularly. If machine is operated under normal conditions, lubricate castor bearings and bushings with No. 2 general purpose lithium base grease or molybdenum base grease, after every 8 hours of operation or daily, whichever comes first

**1.** The cutting unit has bearings and bushings that must be lubricated, and these lubrication points are: front castor spindle bushings (Fig. 23); rear castor spindle shaft (Remove shaft from castor arm and coat hex shaft with designated grease every 50 hours (Fig. 24); castor wheel bearings (Fig. 23 & 24); blade spindle bearings (Fig. 25) and right and left push arm ball joints (Fig. 25).

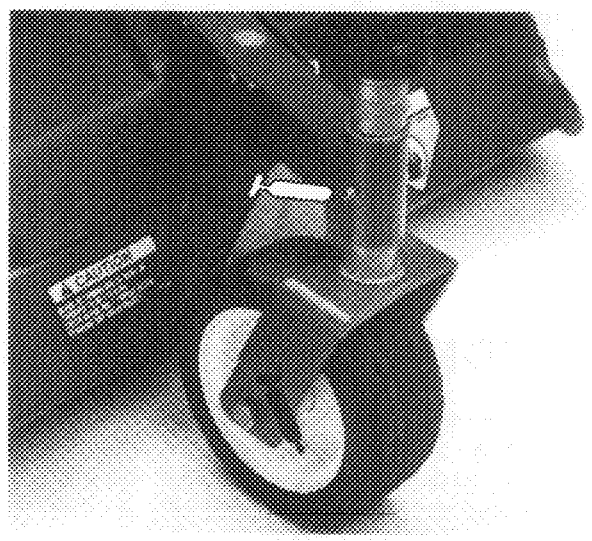

Figure 23

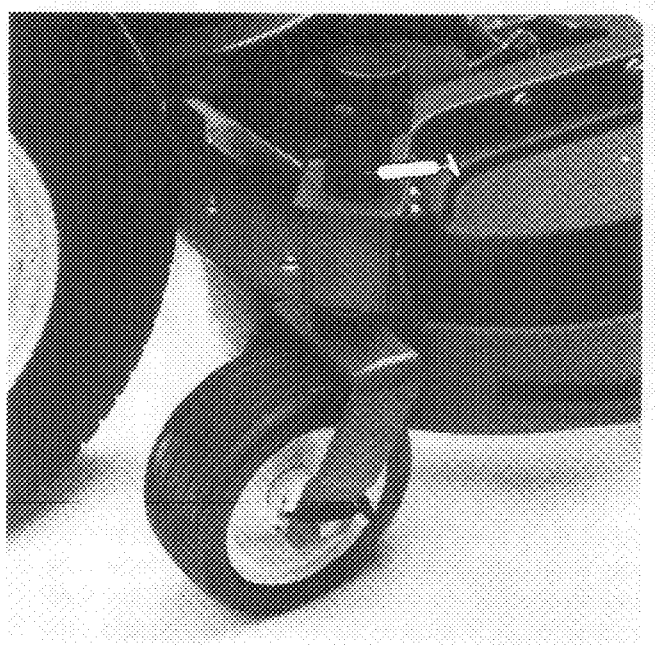

Figure 24

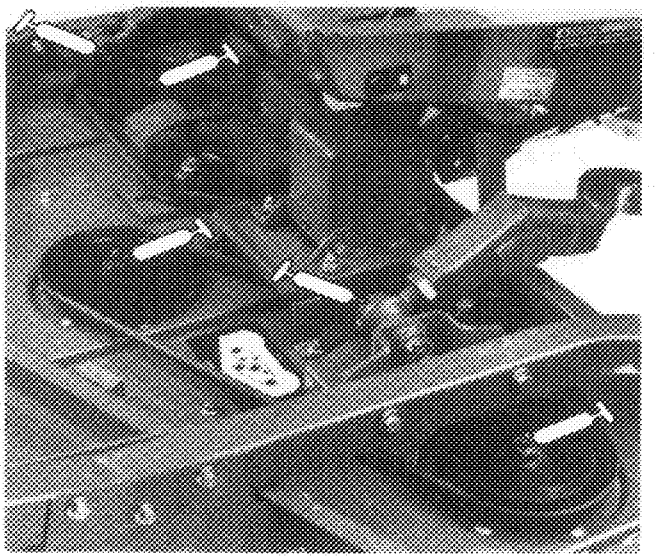

Figure 25

**2.** Position machine and cutting unit on a level surface and lower cutting unit. Remove check plug from side of gear box (Fig. 26) and make sure lubricant is up to bottom of hole. If level of lubricant is low, remove fill plug on top of gear case and add SAE 80–90 wt. gear lube until level is up to bottom of hole in side.

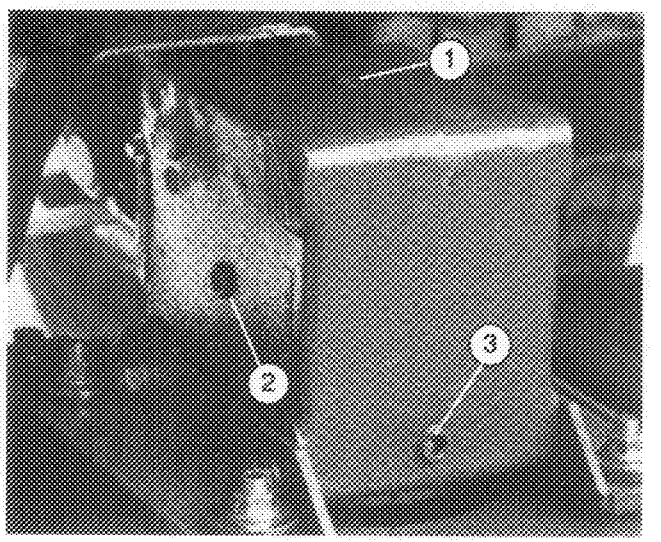


Figure 26

1. Filler Plug
2. Check Plug
3. Drain Plug

# MAINTENANCE
# TROUBLE SHOOTING

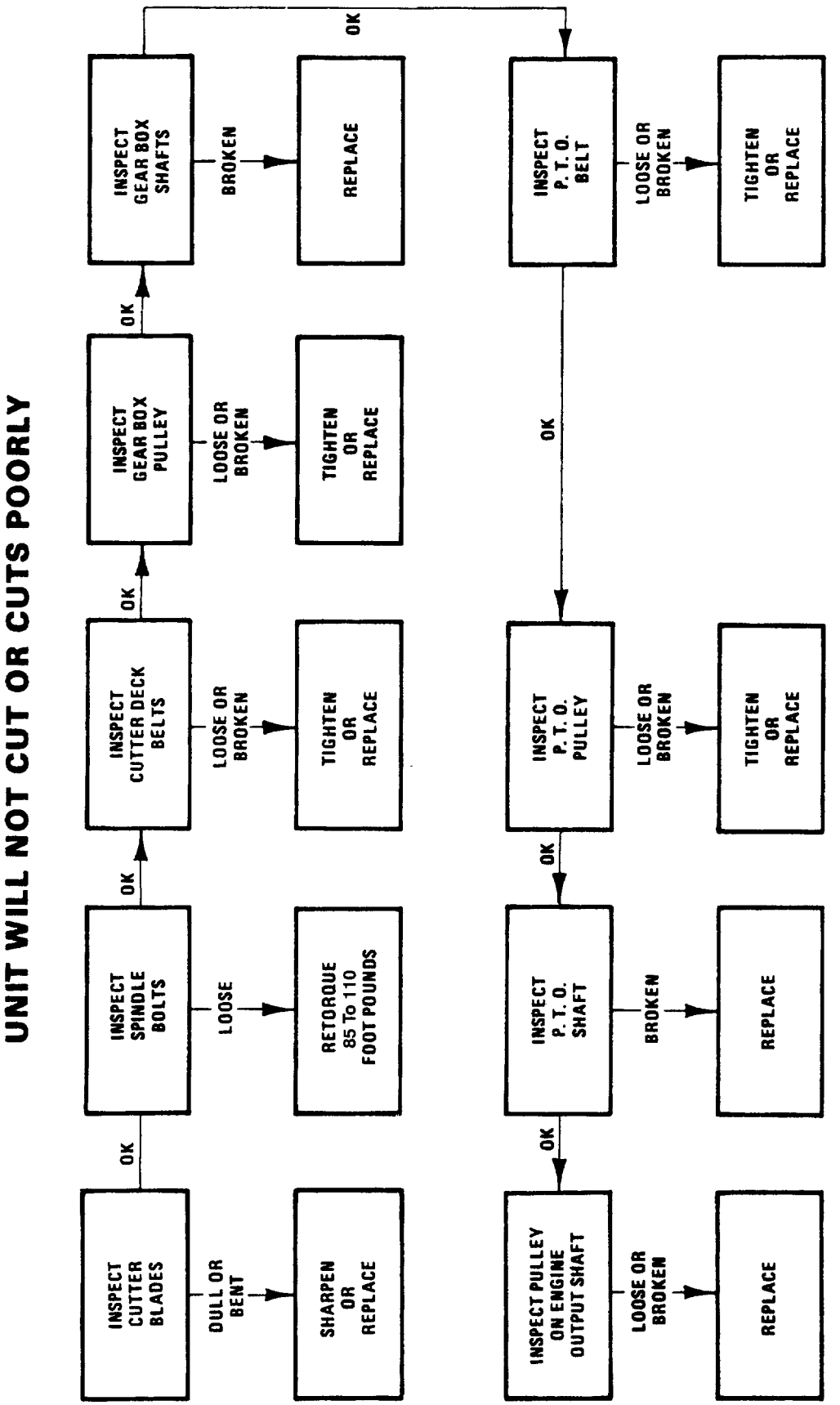

# MAINTENANCE

**⚠ CAUTION**

- **Engine could start accidentally.**
- **Accidental starting of engine could cause serious injury to operator or bystanders.**
- **Shut engine off and remove key from ignition switch before performing any maintenance or adjustments.**

## SEPARATING CUTTING UNIT FROM TRACTION UNIT (Fig. 27–28)

1. Position machine on level surface, lower cutting unit to floor, move lift lever to float position, shut engine off and engage parking brake.

2. Remove the capscrews, flatwashers and locknuts securing the ball joint mounts to castor arms on cutting unit.

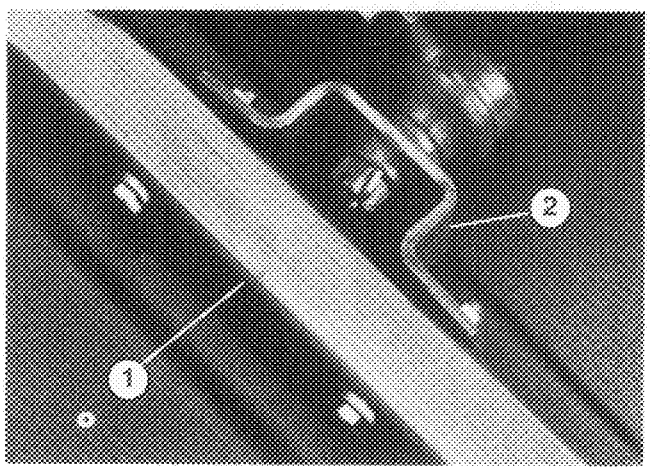


**Figure 27**
1. Castor Arm
2. Ball Joint Mount

3. Roll cutting unit away from the traction unit separating male and female sections of PTO shaft.

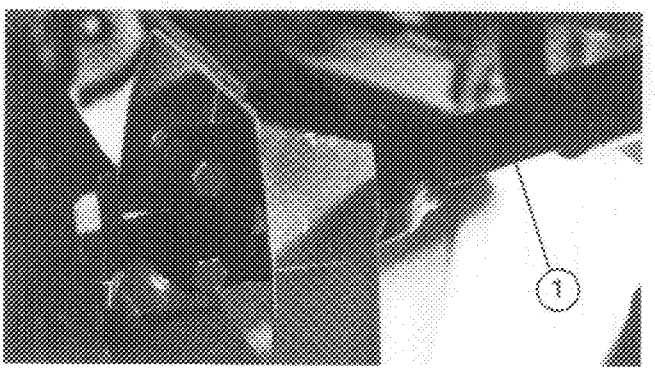


**Figure 28**
1. PTO Shaft

**⚠ DANGER**

- **Starting engine and engaging PTO lever when PTO shaft is not connected to cutting unit gear box may result in serious personal injury.**
- **Do not start engine and engage PTO lever when PTO shaft is not connected to gear box on cutting unit.**

## MOUNTING CUTTING UNIT TO TRACTION UNIT (Fig. 27–28)

1. Position machine on a level surface and shut engine off.

2. Move cutting unit into position in front of traction unit.

3. Slide male PTO shaft into female PTO shaft.

4. Move lift lever to FLOAT position. Push lift arms down until holes in ball joint mounts line up with holes in castor arms.

5. Secure ball joint mounts to castor arms with capscrews, flatwashers and flange nuts. Flatwashers to be positioned to outside of castor arm.

## REPLACING DRIVE BELT (Fig. 29–31)

The blade drive belt, tensioned by the stationary idler pulley, is very durable. However, after many hours of use, the belt will show signs of wear. Signs of a worn belt are: squealing when belt is rotating, blades slipping when cutting grass, frayed edges, burn marks and cracks. Replace the belt if any of these conditions are evident.

1. Lower cutting unit to the shop floor. Remove belt covers from top of cutting unit and set covers aside.

2. Loosen flange nut securing idler pulley to deck. Move pulley away from belt to release belt tension.

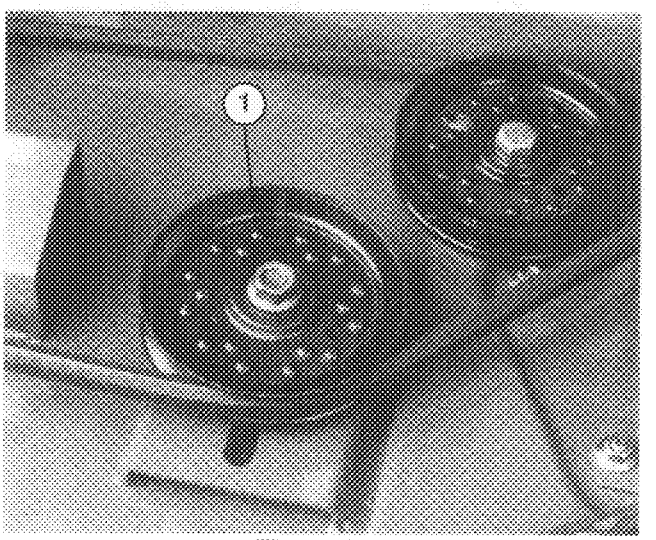


**Figure 29**
1. Idler pulley

3. Remove carriage bolts and flange nuts securing gear box plate to deck. Lift gear box plate and gear box off deck and lay it on top of deck.

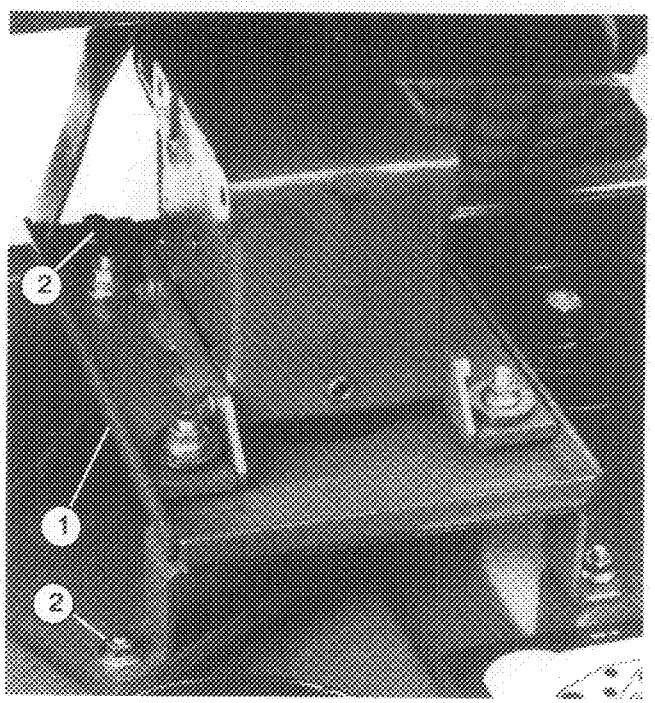


Figure 30

1. Gear Box Plate
2. Capscrews & Nuts

4. Remove old belt from around spindle pulleys and idler pulley.

5. Route new belt around spindle pulleys and idler pulley assembly, as shown in figure 31.

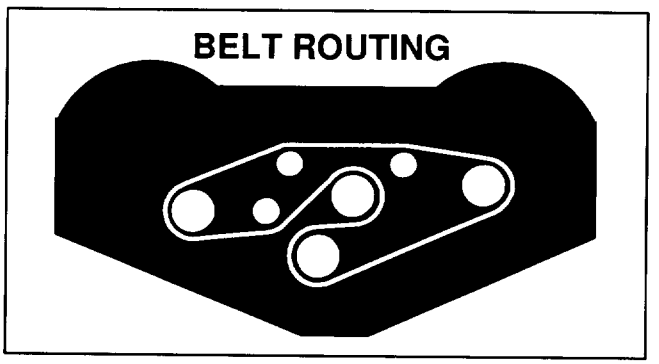


Figure 31

6. Reposition gear box plate on deck while routing belt around gear box pulley. Mount gear box plate to deck with carriage bolts and flange nuts previously removed.

7. Using approximately 50 lbs. of force, slide idler pulley against belt.

8. Hold pulley in position and tighten nut.

8. Reinstall belt covers.

## SERVICING FRONT BUSHINGS IN CASTOR ARMS (Fig. 32)

The castor arms have bushings pressed into the top and bottom of the tube and after many hours of operation, the bushings will wear. To check the bushings, move castor fork back and forth and from side to side. If castor spindle is loose inside the bushings, bushings are worn and must be replaced.

1. Raise cutting unit so wheels are off floor and block it so it cannot fall accidentally.

2. Remove tensioning cap, spacer(s) and thrust washer from top of castor spindle.

3. Pull castor spindle out of mounting tube. Allow thrust washer and spacer(s) to remain on bottom of spindle.

4. Insert pin punch into top or bottom of mounting tube and drive bushing out of tube. Also drive other bushing out of tube. Clean inside of tubes to remove dirt.

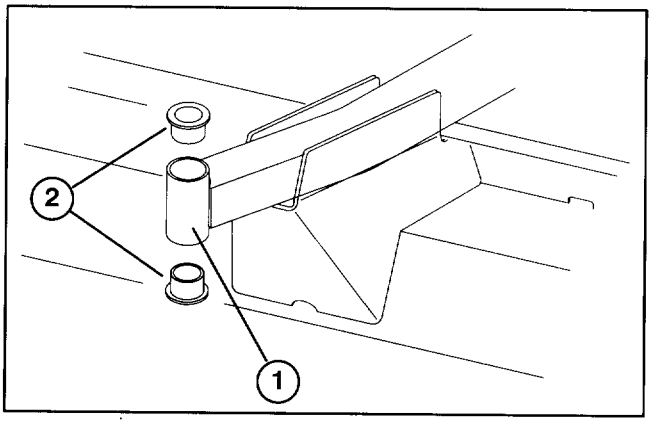


Figure 32

1. Front Castor Arm Tube
2. Bushings

5. Apply grease to inside and outside of new bushings. Using a hammer and flat plate, drive bushings into mounting tube.

6. Inspect castor spindle for wear and replace it if damaged.

7. Push castor spindle through bushings and mounting tube. Slide thrust washer and spacer(s) onto spindle. Install tensioning cap on castor spindle to retain all parts in place.

## SERVICING CASTOR WHEELS AND BEARINGS (Fig. 33)

The castor wheel rotates on a high-quality roller bearing and is supported by a spanner bushing. Even after many hours of use, provided that the bearing was kept well-lubricated, bearing wear will be minimal. However, failure to keep bearing lubricated will cause rapid wear. A wobbly castor wheel usually indicates a worn bearing.

1. Remove locknut from capscrew holding castor wheel assembly between castor fork. Grasp castor wheel and slide capscrew out of fork.

2. Pull spanner bushing out of wheel hub.

3. Remove bushing from wheel hub and allow bearing to fall out. Remove bushing from opposite side of wheel hub.

4. Check the bearing, spanner and inside of wheel hub for wear. Replace defective parts.

5. To assemble the castor wheel, push bushing into wheel hub. Slide bearing into wheel hub. Push other bushing into open end of wheel hub to captivate the bearing inside the wheel hub.

6. Carefully slide spanner through the bushings and the wheel hub.

7. Install castor wheel assembly between castor fork and secure in place with capscrew and locknut.

8. Lubricate castor wheel bearing through grease fitting, using No. 2 general purpose lithium base grease.

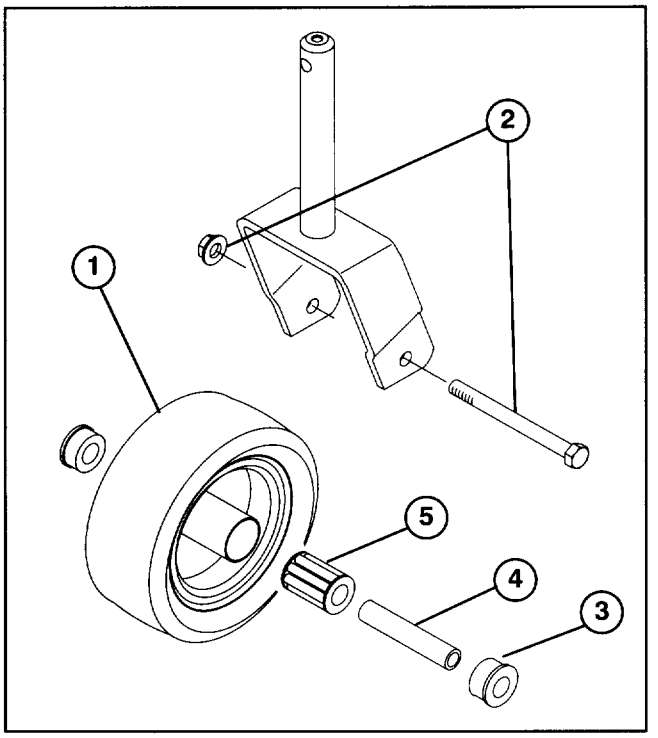


**Figure 33**

1. Castor wheel
2. Capscrew & Locknut
3. Bushing (2)
4. Spanner Bushing
5. Roller Bearing

## REMOVING CUTTER BLADE (Fig. 34)

The blade must be replaced if a solid object is hit, the blade is out–of–balance or if the blade is bent. Always use genuine TORO replacement blades to be sure of safety and optimum performance. Never use replacement blades made by other manufacturers because they could be dangerous.

1. Raise cutting unit to highest position, shut the engine off and engage the parking brake. Block cutting unit to prevent it from falling accidentally.

2. Grasp end of blade using a rag or thickly padded glove. Remove blade bolt, lockwasher, anti–scalp cup and blade from spindle shaft.

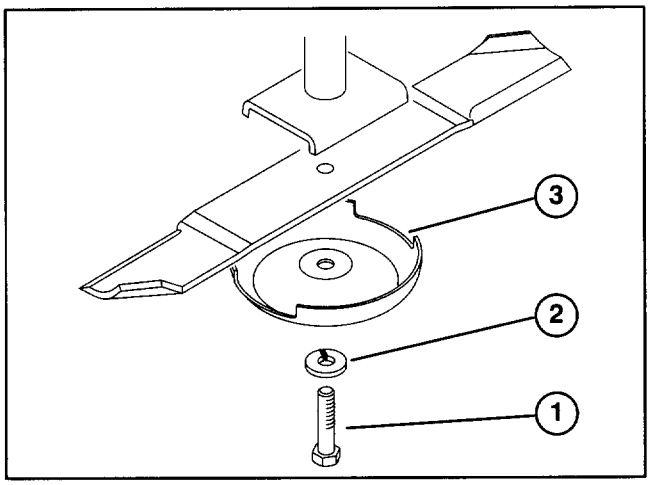


**Figure 34**

1. Blade bolt
2. Lockwasher
3. Anti–Scalp Cup

2. Install blade—sail facing toward cutting unit with anti–scalp cup, lockwasher and blade bolt. Tighten blade bolt to 85–110 ft–lb.

**⚠ CAUTION**

- **Trying to straighten a blade that is bent or welding a broken or cracked blade may result in serious personal injury and/or discontinued safety certification of the product.**
- **Do not try to straighten a blade that is bent, and never weld a broken or cracked blade.**
- **Always replace a damaged blade.**

## INSPECTING AND SHARPENING BLADE (Fig. 35–36)

1. Raise cutting unit to highest position, shut the engine off and engage the parking brake. Block cutting unit to prevent it from falling accidentally.

2. Examine cutting ends of the blade carefully, especially where the flat and curved parts of the blade meet (Fig. 35–A). Since sand and abrasive material can wear away the metal that connects the flat and curved parts of the blade, check the blade before using the machine. If wear is noticed (Fig. 35–B), replace the blade: refer to Removing Cutter Blade.

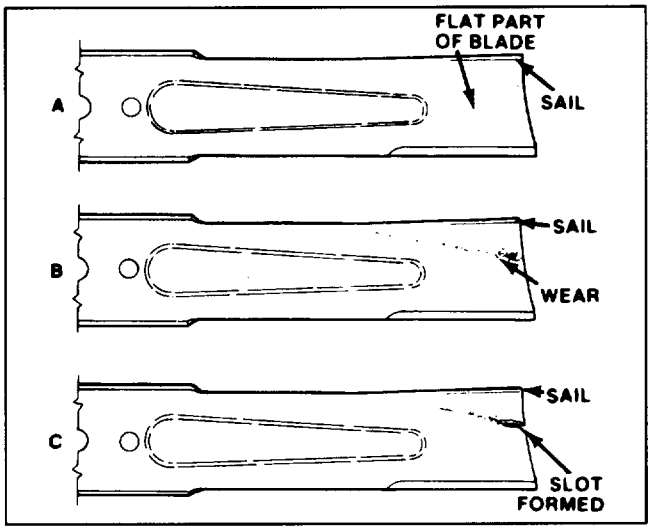


Figure 35

**⚠ DANGER**

- **A worn or damaged blade could break and a piece of blade could be thrown into operator's or bystander's area.**
- **A thrown piece of blade could cause serious personal injury or death to operator or bystanders.**
- **Inspect blade periodically for wear or damage.**
- **Replace a worn or damaged blade.**

3. Inspect cutting edges of all blades. Sharpen the cutting edges if they are dull or nicked. Sharpen only the top of the cutting edge and maintain the original cutting angle to make sure of sharpness (Fig. 36). The blade will remain balanced if same amount of metal is removed from both cutting edges.

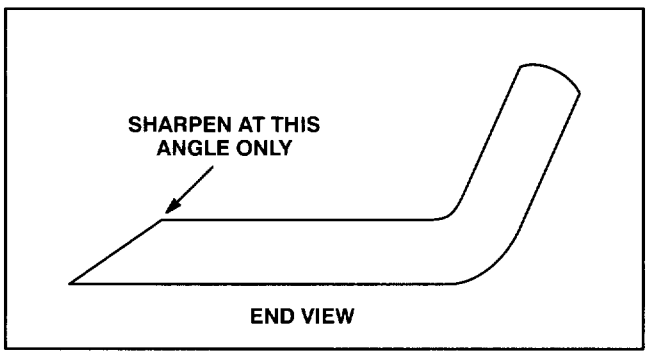


Figure 36

4. To check blade for being straight and parallel, lay blade on a level surface and check its ends. Ends of blade must be slightly lower than the center, and cutting edge must be lower than the heel of the blade. This blade will produce good quality of cut and require minimal power from the engine. By contrast a blade that is higher at the ends than the center, or if cutting edge is higher than the heel, the blade is bent or warped and must be replaced.

5. Install blade—sail facing toward cutting unit with anti-scalp cup, lockwasher and blade bolt. Tighten blade bolt to 85-110 ft-lb.

## CORRECTING CUTTING UNIT MISMATCH

If there is mismatch between the blades, the grass will appear streaked when it is cut. This problem can be corrected by making sure the blades are straight and all blades are cutting on the same plane.

1. Using a 3 foot long carpenters level, find a level surface on the shop floor.

2. Raise height-of-cut to the highest position: refer to Adjusting Height-Of-Cut.

3. Lower cutting unit onto flat surface. Remove covers from top of cutting unit.

4. Loosen flange nut securing idler pulley to release belt tension.

5. Rotate blades until the ends face forward and backward. Measure from floor to front tip of cutting edge and remember this dimension. Then rotate same blade so opposite end is forward and measure again. The difference between dimensions must not exceed 1/8 of an inch. If dimension exceeds 1/8 of an inch, replace the blade because it is bent. Make sure to measure all blades.

6. Compare measurements of outer blades with the center blade. Center blade must not be more than 3/8 of an inch lower than the outer blades. If center blade is more than 3/8 of an inch lower than the outer blades. proceed to step 7 and add shims between spindle housing and bottom of cutting unit.

7. Remove capscrews, flatwashers, lockwashers and nuts from outer spindle in the area where shims must be added. To raise or lower the blade, add a shim, Part No. 3256-24, between spindle housing and bottom of cutting unit. Continue to check alignment of blades and add shims until tips of blades are within the required dimension.

**IMPORTANT: Do not use more than three shims at any one hole location. Use decreasing numbers of shims in adjacent holes if more than one shim is added to any one hole location.**

8. Readjust idler pulley. Reinstall belt covers.

# IDENTIFICATION AND ORDERING

## MODEL AND SERIAL NUMBERS

The cutting deck has two identification numbers: a model number and a serial number. The two numbers are stamped into a plate located on left rear hanger bracket of mower deck. In any correspondence concerning the mower, supply the model and serial numbers to assure that correct information and replacement parts are obtained.

To order replacement parts from an authorized TORO Distributor, supply the following information:

1. Model and serial numbers of the machine.

2. Part number, description and quantity of parts desired.

**Note:** Do not order by reference number if a parts catalog is being used; use the part number.

# HYDRAULIC SCHEMATIC

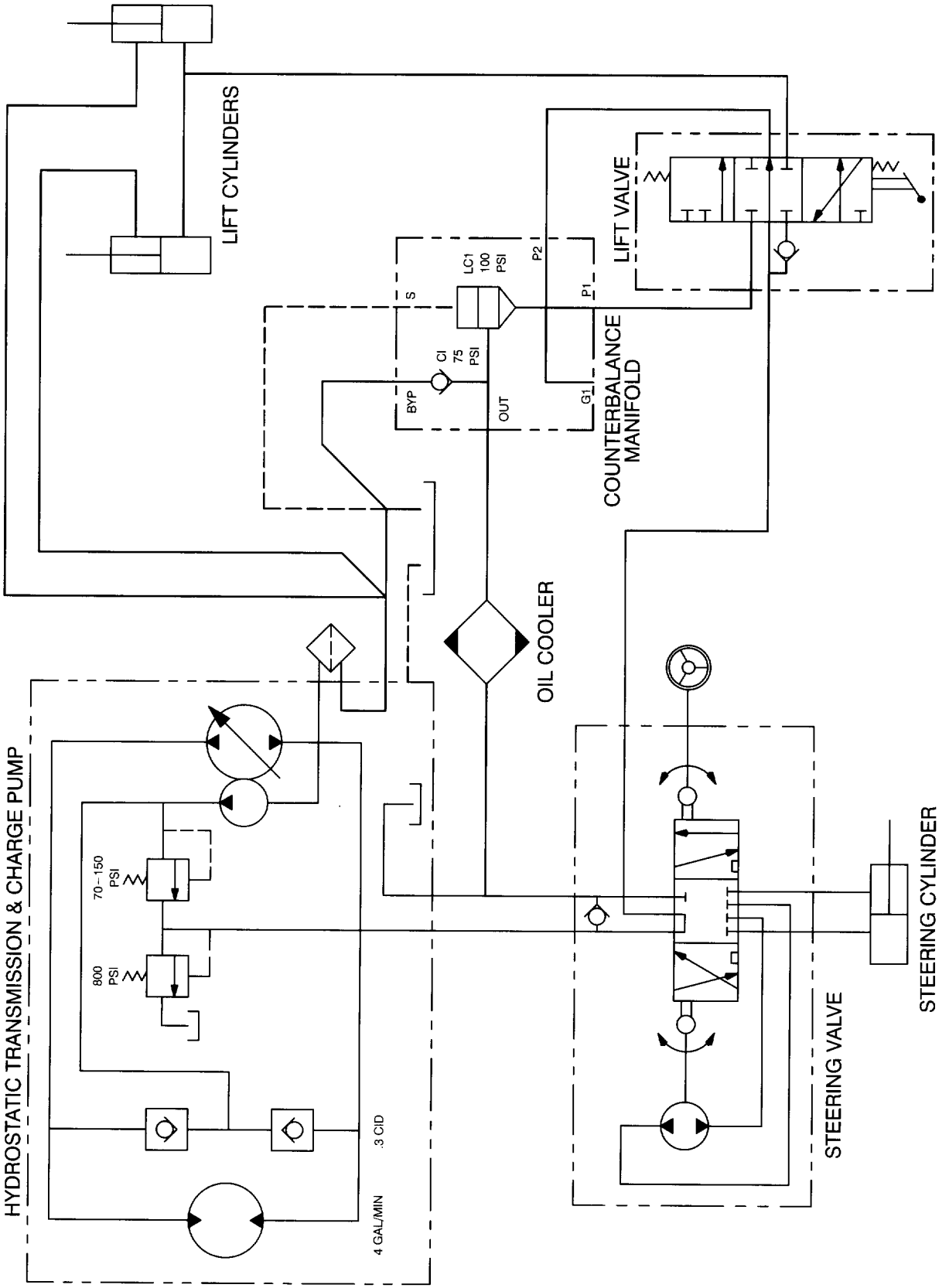

# MAINTENANCE CHART

| Date | Hours Used | Lubrication | | | | | | |
|---|---|---|---|---|---|---|---|---|
| | | | | | | | | |
| | | | | | | | | |
| | | | | | | | | |

# MAINTENANCE CHART

| Date | Hours Used | Lubrication | | | | | | |
|---|---|---|---|---|---|---|---|---|
| | | | | | | | | |
| | | | | | | | | |
| | | | | | | | | |

# The Toro Promise

## *A One Year Limited Warranty*

*The Toro Company promises to repair your TORO Product if defective in materials or workmanship. The following time periods from the date of purchase apply:*

**Commercial Products** ..... **1 Year**

*The cost of parts, labor and transportation are included.*

---

If you feel your TORO Product is defective and wish to rely on The Toro Promise, the following procedure is recommended:

1. Contact your Authorized TORO Distributor or Commercial Dealer (the Yellow Pages of your telephone directory is a good reference source).

2. The TORO Distributor or Commercial Dealer will advise you on the arrangements that can be made to inspect and repair your product.

3. The TORO Distributor or Commercial Dealer will inspect the product and advise you whether the product is defective and, if so, make all repairs necessary to correct the defect without an extra charge to you.

If for any reason you are dissatisfied with the distributor's analysis of the defect or the service performed, you may contact us.

Write:

TORO Commercial Products Service Department
8111 Lyndale Avenue South
Minneapolis, MN 55420–1196

The above remedy of product defects through repair by an Authorized TORO Distributor or Commercial Dealer is the purchaser's sole remedy for any defect.

THERE IS NO OTHER EXPRESS WARRANTY. ALL IMPLIED WARRANTIES OF MERCHANTIBILITY AND FITNESS FOR USE ARE LIMITED TO THE DURATION OF THE EXPRESS WARRANTY.

Some states do not allow limitations on how long an implied warranty lasts, so the above limitation may not apply to you.

This Warranty applies only to parts or components which are defective and does not cover repairs necessary due to normal wear, misuse, accidents, or lack of proper maintenance. Regular, routine maintenance of the unit to keep it in proper operating condition is the responsibility of the owner.

All warranty repairs reimbursable under The Toro Promise must be performed by an Authorized Toro Commercial Dealer or Distributor using Toro approved replacement parts.

Repairs or attempted repairs by anyone other than an Authorized TORO Distributor or Commercial Dealer are not reimbursable under the TORO Promise. In addition, these unauthorized repair attempts may result in additional malfunctions, the correction of which is not covered by warranty.

THE TORO COMPANY IS NOT LIABLE FOR INDIRECT, INCIDENTAL OR CONSEQUENTIAL DAMAGES IN CONNECTION WITH THE USE OF THE PRODUCT INCLUDING ANY COST OR EXPENSE OF PROVIDING SUBSTITUTE EQUIPMENT OR SERVICE DURING PERIODS OF MALFUNCTION OR NON–USE.

Some states do not allow the exclusion of incidental or consequential damages, so the above exclusion may not apply to you.

This warranty gives you specific legal rights, and you may also have other rights which vary from state to state.

**COUNTRIES OTHER THAN THE UNITED STATES OR CANADA**

Customers who have purchased TORO products exported from the United States or Canada should contact their TORO Distributor (Dealer) to obtain guarantee policies for your country, province, or state. If for any reason you are dissatisfied with your Distributor's service or have difficulty obtaining guarantee information, contact the TORO importer. If all other remedies fail, you may contact us at The Toro Company.

Compliance with Radio Interference Regulations Certified.

Litho in U.S.A.