Form No. 3374-274 Rev A

36cm and 41cm Electric Lawn Mowers

Model No. 21180—Serial No. 312000001 and Up

Model No. 21190—Serial No. 312000001 and Up

Operator's Manual

Introduction

This rotary-blade, walk-behind lawn mower is intended to be used by residential homeowners. It is designed primarily for cutting grass on well-maintained lawns on residential properties. It is not designed for cutting brush or for agricultural uses.

Read this manual carefully to learn how to operate and maintain your mower properly. The information in this manual can help you and others avoid injury and product damage. Although Toro designs and produces safe products, you are responsible for operating the product properly and safely.

Regulations on the operation of mowers vary from one area to another. Consult with local authorities for regulations and restrictions regarding permitted mowing times in your area.

Contents

Introduction 1
Safety 1
- Safe Operating Practices 1
- Sound Pressure (Model 21180) 2
- Sound Power (Model 21180) 2
- Vibration, Hand/arm (Model 21180) 3
- Sound Pressure (Model 21190) 3
- Sound Power (Model 21190) 3
- Vibration, Hand/arm (Model 21190) 3
- 3
- Waste of Electrical/Electronic Equipment (WEEE) 3
- Safety and Instructional Decals 3

Setup 4
- 1 Unfolding the Handle 4
- 2 Assembling the Grass Bag 4

Product Overview 6
- Specifications 6

Operation 6
- Securing the Extension Cord 6
- Planning Your Mowing Pattern 7
- Starting the Motor 7
- Stopping the Motor 7
- Adjusting the Height-of-Cut Setting 8
- Bagging the Clippings 8
- Mowing Tips 9

Maintenance 9
- Double-insulated Appliances 9
- Cleaning the Mower Housing 9
- Lubricating the Machine 10
- Servicing the Blade 10
- Servicing the On/Off and Blade Brake System 11

Storage 12
Troubleshooting 13

Safety

Read and understand the contents of this manual before starting the motor.

⚠This is the safety alert symbol. It is used to alert you to potential personal injury hazards. Obey all safety messages that follow this symbol to avoid possible injury or death.

Improperly using or maintaining this lawn mower could result in injury or death. To reduce this potential, comply with the following safety instructions.

⚠ WARNING

To reduce the risk of fire, electric shock, and personal injury when using this electric lawn mower, always follow these safety instructions.

The following safety information has been adapted from European Standard EN 836/A3:2004 and EN 60335-77:2006.

Safe Operating Practices

General Information

- Read the instructions carefully. Be familiar with the controls and the proper use of the equipment.
- Never allow children or people unfamiliar with these instructions to use the lawn mower. Local regulations can restrict the age of the operator.
- Never mow while people, especially children or pets, are nearby.
- The operator or user is responsible for accidents or hazards occurring to other people or their property.

© 2012—The Toro® Company
8111 Lyndale Avenue South
Bloomington, MN 55420

Register at www.Toro.com.

Original Instructions (EN)
Printed in China
All Rights Reserved

3374-274 A

Preparation

- While mowing, always wear substantial footwear and long trousers. Do not operate the equipment when barefoot or wearing open sandals.
- Thoroughly inspect the area where the equipment is to be used, and remove all objects which can be thrown by the machine.
- Before using, always visually inspect to see that the blade, blade bolts, and cutter assembly are not worn or damaged. Replace a worn or damaged blade and bolts as a set to preserve balance.
- Toro recommends that the mower should be supplied with a residual current device (RCD) having a tripping current of not more than 30 mA.
- Use only 1.00 mm^2 size extension cord no more than 30 m long suitable for outdoor use (if applicable).
- Regularly inspect the power cords for signs of damage or aging. Replace immediately if defective.
- Do not use the mower if any power cord is damaged or worn.
- Do not connect a damaged extension cord to the mains supply or touch a damaged cord before it is disconnected from the mains supply. A damaged cord can lead to contact with live parts.

Handling

- Mow only in daylight or in good artificial light.
- Avoid operating the equipment in wet grass, where feasible.
- Always be sure of your footing on slopes.
- Walk; never run.
- For wheeled rotary mowers, mow across the face of slopes, never up and down.
- Exercise extreme caution when changing direction on slopes.
- Do not mow excessively steep slopes.
- Use extreme caution when reversing or pulling the lawn mower toward you.
- Switch off the mower when transporting it from one cutting area to another. Stop the blade whenever you move the mower off the lawn.
- Never operate the lawn mower with defective guards or without mounted safety devices (for example, deflectors and/or grass catchers) in place.
- Switch on the motor carefully according to instructions and with feet well away from the blade.
- Do not tilt the lawn mower when switching on the motor, except if the lawn mower has to be tilted for starting. In this case, do not tilt it more than absolutely necessary and lift only the part which is away from the operator. Always ensure that both hands are in the operating position before returning the appliance to the ground.
- Do not put hands or feet near or under rotating parts. Keep clear of the discharge opening at all times.
- Never pick up or carry a lawn mower while the motor is running.
- Pull the plug from the socket:
  - whenever you leave the lawn mower;
  - before clearing a blockage or removing material from the chute;
  - before checking, cleaning, or working on the lawn mower;
  - after striking a foreign object. Inspect the lawn mower for damage and make repairs before restarting and operating the lawn mower;
  - if the lawn mower starts to vibrate abnormally (check immediately).
- If the extension cord becomes damaged during use, stop the mower, remove plug from the mains supply, and replace the damaged extension cord.
- Do not touch the blades before the machine is disconnected from the mains supply and the blades have come to a complete stop.
- Keep the extension cord away from the blades. The blades can cause damage to the extension cord and lead to contact with live parts.

Maintenance and Storage

- Keep all nuts, bolts, and screws tight to be sure the equipment is in safe working condition.
- Check the grass catcher frequently for wear or deterioration.
- Replace worn or damaged parts for safety.
- Ensure that only the proper replacement cutting blade is used.
- Purchase only genuine Toro replacement parts and accessories.

Sound Pressure (Model 21180)

This unit has a sound pressure level at the operator's ear of 78 dBA, which includes an Uncertainty Value (K) of 2 dBA.

Sound pressure level was determined according to the procedures outlined in EN 836.

Sound Power (Model 21180)

This unit has a guaranteed sound power level of 88 dBA, which includes an Uncertainty Value (K) of 2dBA.

Sound power level was determined according to the procedures outlined in ISO 11094.

Vibration, Hand/arm (Model 21180)

Measured vibration level for right hand = 1.0 m/s^2

Measured vibration level for left hand = 1.0 m/s^2

Uncertainty Value (K) = 0.5 m/s^2

Measured values were determined according to the procedures outlined in EN 836.

Sound Pressure (Model 21190)

This unit has a sound pressure level at the operator's ear of 83 dBA, which includes an Uncertainty Value (K) of 2 dBA.

Sound pressure level was determined according to the procedures outlined in EN 836.

Sound Power (Model 21190)

This unit has a guaranteed sound power level of 93 dBA, which includes an Uncertainty Value (K) of 2 dBA.

Sound power level was determined according to the procedures outlined in ISO 11094.

Vibration, Hand/arm (Model 21190)

Measured vibration level for right hand = 1.0 m/s^2

Measured vibration level for left hand = 1.0 m/s^2

Uncertainty Value (K) = 0.5 m/s^2

Measured values were determined according to the procedures outlined in EN 836.

Waste of Electrical/Electronic Equipment (WEEE)



- EU directive 2002/96/EC classifies this product as an electrical or electronic tool.
- **Do Not** dispose of this tool as unsorted municipal waste.
- Dispose of this tool at a collection or recycling center according to local and national law.
- The consumer has an important role in reducing the disposal of waste by returning waste electronic/electrical tools for recycling.
- Recycling avoids the dispersion of hazardous materials into the municipal waste stream.
- The crossed-out bin symbol reminds the user not to dispose of this product as unsorted municipal waste.

Safety and Instructional Decals

Important: Safety and instruction decals are located near areas of potential danger. Replace damaged or lost decals.



111-4782

1. Height of cut



111–5173

1. Warning—read the *Operator's Manual.*
2. Cutting/dismemberment hazard of hand or foot, mower blade—wait for moving parts to stop.
3. Thrown object hazard—keep bystanders a safe distance from the machine.
4. Electrical shock hazard—do not operate the machine in the rain.
5. Electrical shock hazard—do not run over the machine's electrical cable.
6. Cutting/dismemberment hazard of hand or foot, mower blade—unplug the machine before performing maintenance.

Setup

Note: Do not connect the mower to a power source until the mower is fully assembled.

1

Unfolding the Handle

No Parts Required

Procedure

1. Carefully unfold the handle, keeping the cables clear of the pivot points so that they do not get pinched.

⚠ CAUTION

The handles pass each other like a scissors while folding and unfolding them and can pinch your fingers.

Keep your fingers clear of the pivot points and crossing handles as you fold or unfold the handles.

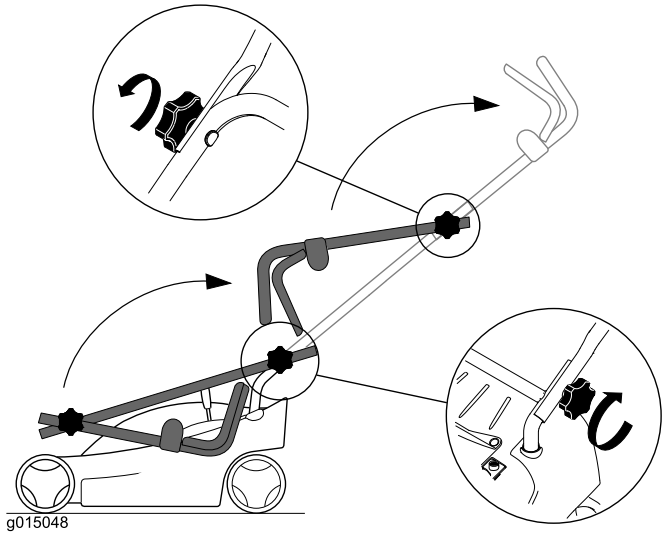

Figure 1
Model 21180

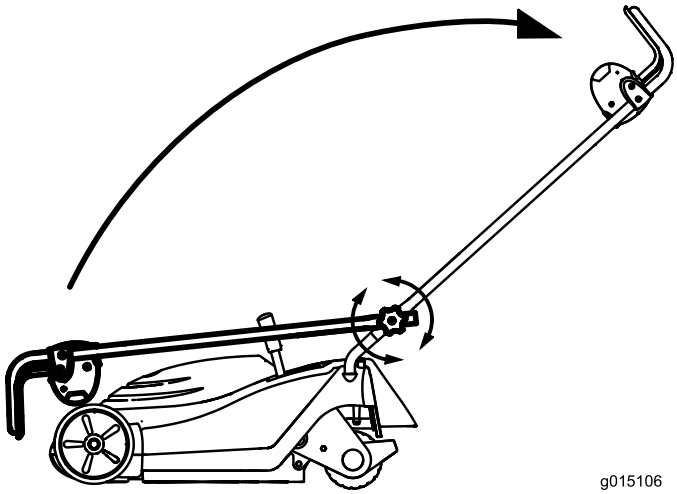

Figure 2
Model 21190

2. Tighten the knobs on the handle to secure the handle in place.

2

Assembling the Grass Bag

No Parts Required

Procedure

1. Slide the wire bag frame into the grass bag, ensuring that the handle is above the fabric (Figure 3).

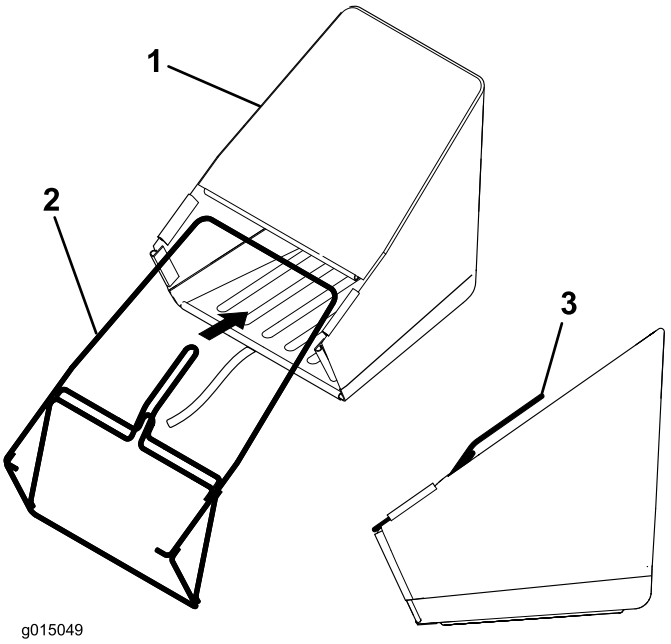

Figure 3

1. Grass bag
2. Wire frame
3. Handle

2. Starting at the handle, connect the 6 plastic clips on the grass bag to the wire frame (Figure 4).

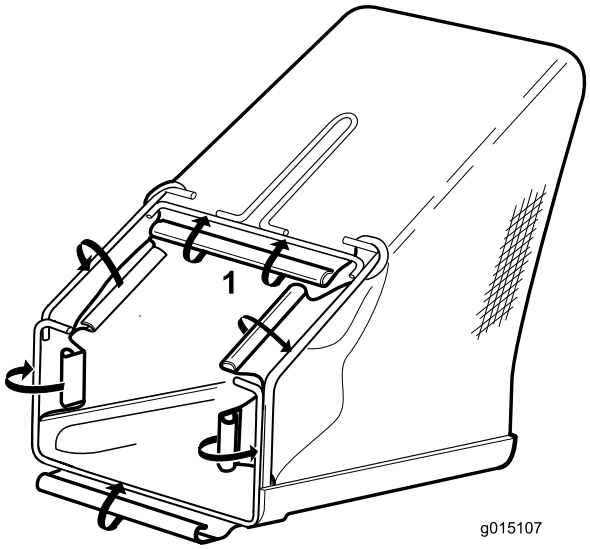

Figure 4

1. Start here and work downward.

3. Install the plastic cover onto the bag frame as shown in Figure 5.

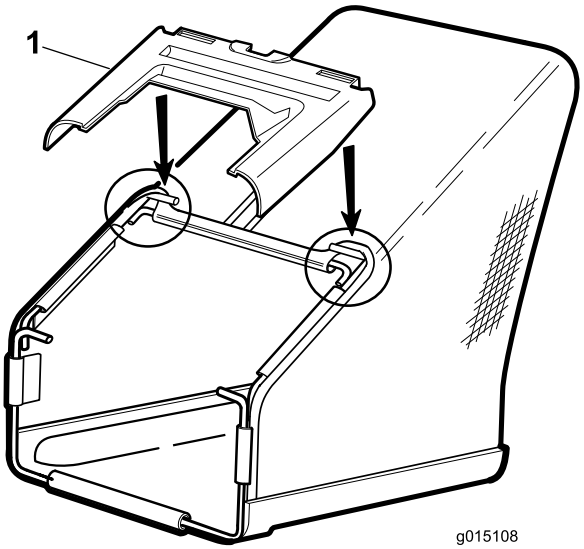

Figure 5

1. Plastic cover

Product Overview

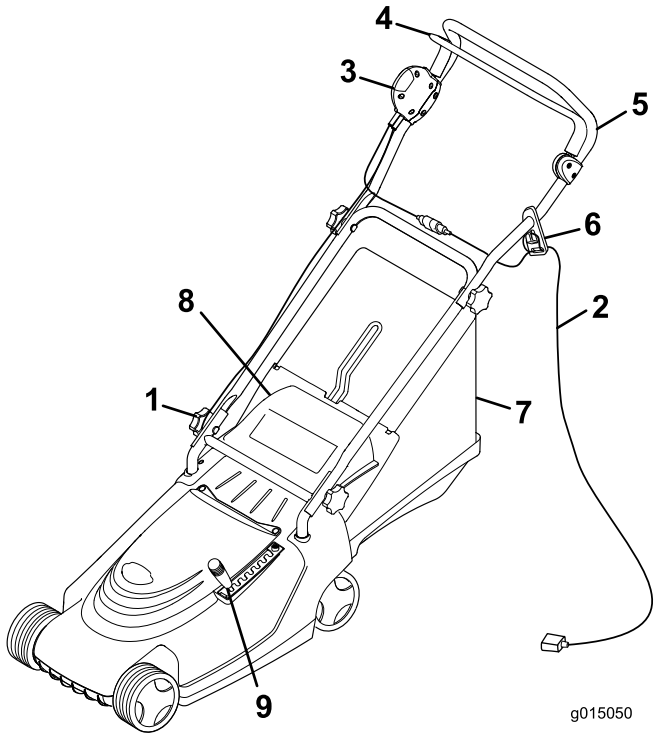

Figure 6

1. Handle knob (2)
2. Extension cord (not supplied)
3. Button
4. Control bar
5. Handle
6. Cord lock
7. Grass bag
8. Rear door
9. Height-of-cut lever

Specifications

Model	21180	21190
Weight	20.4 kg	27.4 kg
Length	136 cm	138 cm
Width	45 cm	48 cm
Height	104 cm	106 cm
Width of cut	36 cm	41 cm
Height-of-cut range (7 positions)	13 to 60 mm	13 to 65 mm
Volts and Frequency	230 V / 50 Hz	230 V / 50 Hz
Power	1.4 kW	1.5 kW

Operation

Securing the Extension Cord

Use only an extension cord recommended for outdoor, cold-weather use.

⚠ WARNING

Contacting water while operating the mower could cause an electric shock, which can cause an injury or death.

- **Don't handle the plug or the mower with wet hands or while standing in water.**
- **Use only an extension cord recommended for outdoor, cold-weather use.**

1. Form a loop in the extension cord and secure it in the cord lock (Figure 7).

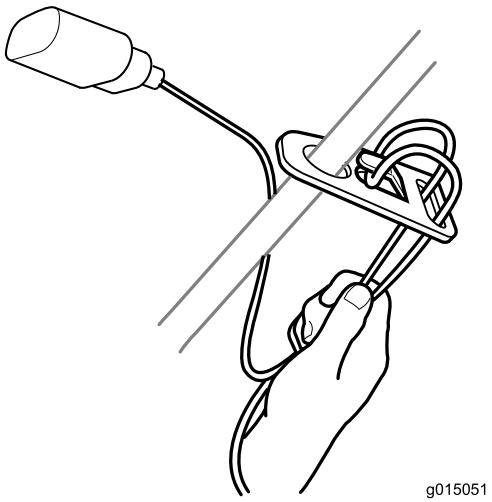

Figure 7

2. Connect the extension cord to the mower plug.

   Note: Do not unplug the extension cord by pulling on the cord; to unplug the cord, grasp the plug, not the cord.

⚠ WARNING

The electrical cord could be damaged, causing a shock or fire.

Thoroughly inspect the electrical cord before using the mower. If the cord is damaged, do not operate the mower. Have an Authorized Toro Service Dealer replace or repair a damaged cord immediately.

Planning Your Mowing Pattern

Following the suggested mowing pattern will reduce the risk of running over the cord with the mower, and the cord will not sustain unnecessary wear. Do not allow the power cord to wrap around trees, shrubs, or other obstacles.

Begin by mowing near the electrical power source. Mow back and forth, gradually mowing away from the power source (Figure 8).

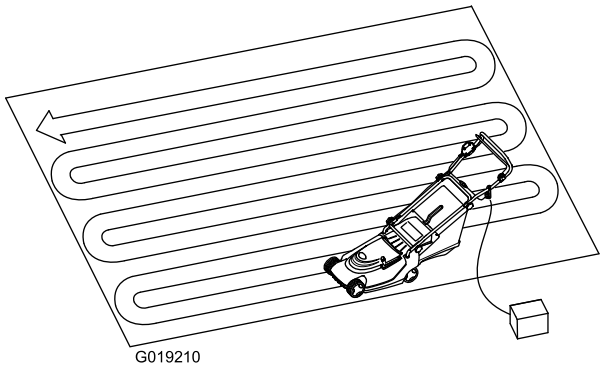

Figure 8

Starting the Motor

⚠ WARNING

Allow the motor to come to a complete stop before starting it. Failure to do this could damage the motor, making the mower unsafe.

1. Connect the extension cord to the mower (if applicable).
2. Plug the other end of the cord into a household electrical power outlet.
3. Push the button on the right side of the handle and hold it in (Figure 9).

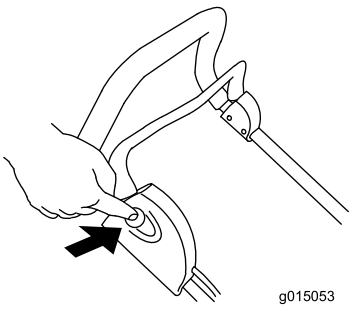

Figure 9

4. While holding in the button, pull the control bar toward the handle (Figure 10).

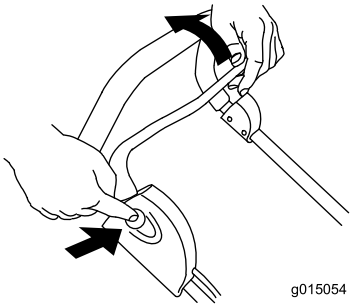

Figure 10

5. Hold the control bar to the handle and release the button (Figure 11).

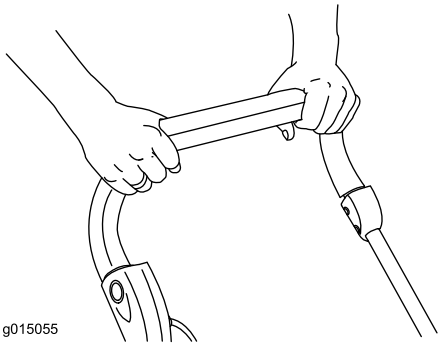

Figure 11

Stopping the Motor

1. Release the control bar (Figure 12).

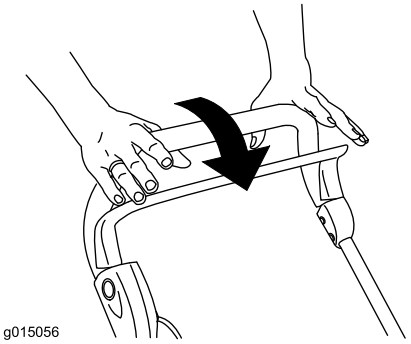

Figure 12

2. Disconnect the mower from the power source if you leave the mower unattended.

Adjusting the Height-of-Cut Setting

⚠ DANGER

Adjusting the height-of-cut setting could bring your hands and feet into contact with a moving blade and result in serious injury.

Stop the motor and wait for all moving parts to stop before changing the height-of-cut setting.

1. Stop the motor and wait for all moving parts to stop.
2. Pull the height-of-cut lever out of the position slot it is in, and move it forward or rearward to the desired slot (Figure 13).

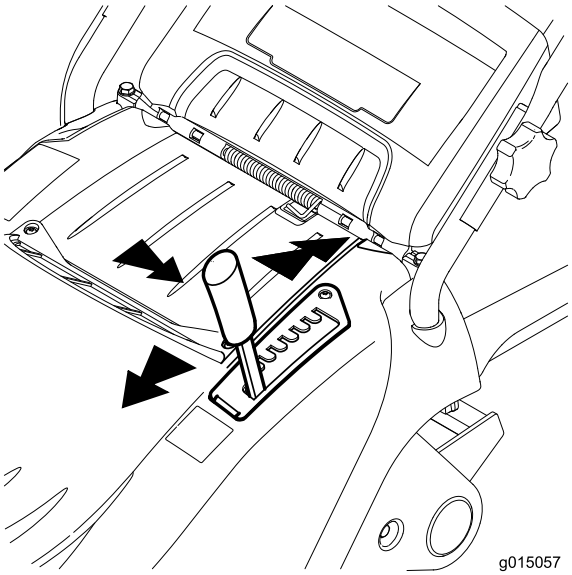

Figure 13

Bagging the Clippings

Install the grass bag to collect the clippings.

1. Lift the rear door and remove the mulch plug (Figure 14).

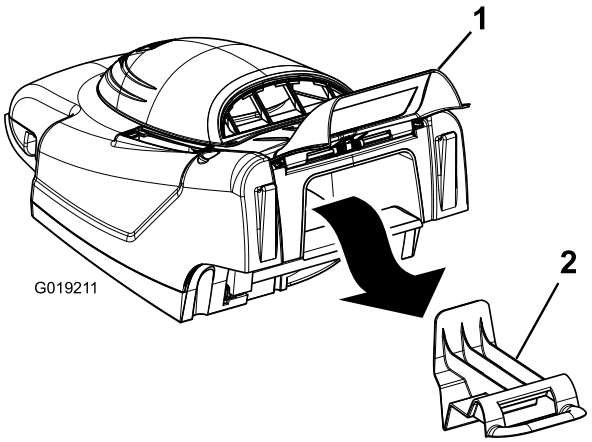

Figure 14

1. Rear door
2. Mulch plug

2. While holding up the rear door, install the grass bag onto the lugs (Figure 15).

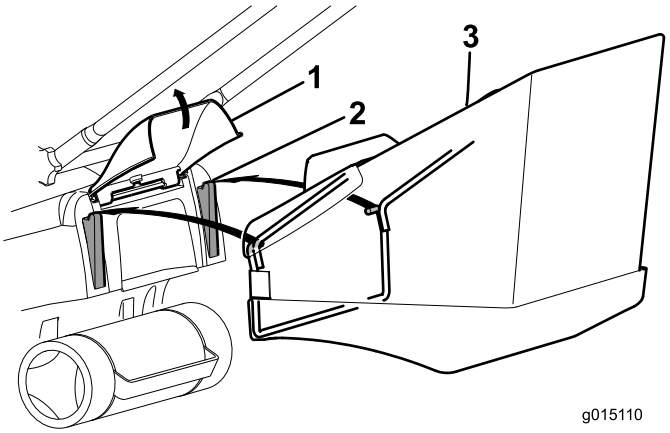

Figure 15

1. Rear door
2. Lug
3. Grass bag

3. Release the rear door.
4. Mow with the grass bag attached.
5. When the bag is full, stop the motor, remove the grass bag from the mower, and empty the contents.

Note: To convert from bagging to recycling, remove the grass bag, and insert the mulch plug that you removed in step 1 (Figure 16).

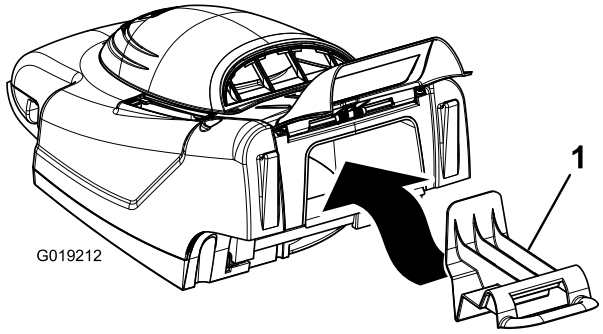

Figure 16
Model 21180 shown

1. Mulch plug

Mowing Tips

Follow these instructions when cutting grass for the best cutting results and lawn appearance.

- Maintain a **sharp blade** throughout the mowing season.
- **Only mow dry grass.** Wet grass tends to clump on the yard and may cause the mower to plug up or the motor to stall. They may also be slippery to walk on and could cause you to slip and fall.
- While cutting single swaths, ensure an overlap of about 4 cm.
- When cutting very tall grass, you may want to first mow at the highest height-of-cut setting and a slower walking speed; then mow again at a lower setting for best lawn appearance.
- If the finished cut lawn appearance is unsatisfactory, try one or more of the following:
  - Sharpen the blade.
  - Walk at a slower pace while mowing.
  - Raise the height-of-cut setting on your mower.
  - Cut the grass more frequently.
  - Overlap cutting swaths instead of cutting a full swath with each pass.

Maintenance

Toro has designed this product to give you years of trouble-free use. Should it need service, bring the product to an Authorized Toro Service Dealer.

⚠ WARNING

When the mower is connected to a household power source, the mower is operational. Someone could accidentally start the mower and cause a serious injury to you or other bystanders.

Always disconnect the mower from the power source when you leave the mower unattended.

Double-insulated Appliances

In a double-insulated appliance, 2 systems of insulation are provided instead of grounding. No grounding means is provided on a double-insulated appliance, nor should a means for grounding be added to the appliance. Servicing a double-insulated appliance requires extreme care and knowledge of the system, and should be done only by the qualified service personnel at an Authorized Toro Service Dealer. Replacement parts for a double-insulated appliance must be identical to the parts they replace. A double-insulated appliance is marked with the words "Double Insulation" or "Double Insulated." The symbol (square within a square) ⧈ may also be marked on the appliance.

Cleaning the Mower Housing

After each use, clean the mower housing.

Before cleaning, stop the motor, wait for all moving parts to stop, and disconnect the mower from the power source.

Important: Do not clean the mower with water. Moisture can get trapped in the mower and may cause corrosion of internal parts.

- Clean the underside of the mower housing. Remove dirt and grass clippings with a hardwood scraper or brush (Figure 17).

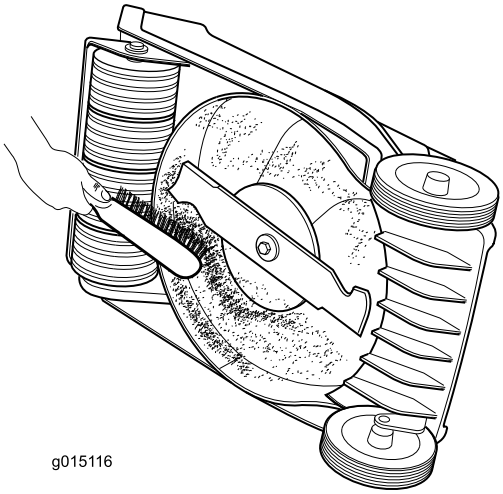

Figure 17

- Remove the debris from the housing vents along the top of the mower.
- Brush all the debris off the mower housing.
- Inspect the power plug receptacle for signs of melting or heating. Old worn-out extension cord plugs that fit loosely in the plug receptacle can cause overheating from poor contact. Replace any damaged extension cords immediately (if applicable) .

Lubricating the Machine

Lubricate the wheels, linkages, and pivot points every 25 operating hours with engine oil (Figure 18).

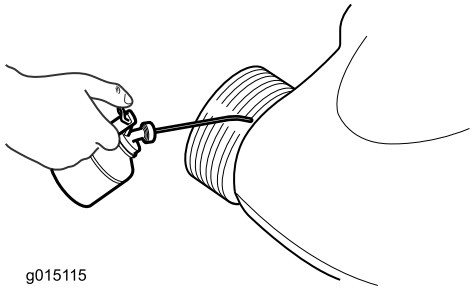

Figure 18

Servicing the Blade

Always mow with a sharp blade. A sharp blade cuts the grass evenly, without tearing or shredding the grass.

When you replace the blade, use only genuine Toro replacement blades.

⚠ WARNING

Someone could accidentally start the motor and cause a serious injury to the operator or to bystanders.

Do not attempt to inspect, remove, or replace the blade without first disconnecting the mower from the power source.

1. Stop the motor and wait for all moving parts to stop.
2. Disconnect the mower from the electrical power source.
3. Tip the mower onto its side.
4. Carefully examine the blade for sharpness and wear, especially where the flat and curved parts of the blade meet. If you notice wear, replace the blade.

   Note: For best performance, install a new blade before the mowing season begins. During the season, file down small nicks on the blade to maintain its cutting edge.

⚠ DANGER

A worn or damaged blade could break and a piece of blade could be thrown in the operator's or bystander's direction, causing serious personal injury or death.

Inspect the blade periodically for wear or damage, and replace a worn or damaged blade.

Removing the Blade

1. Grasp the end of the blade (Figure 19) with a rag or thickly padded glove.

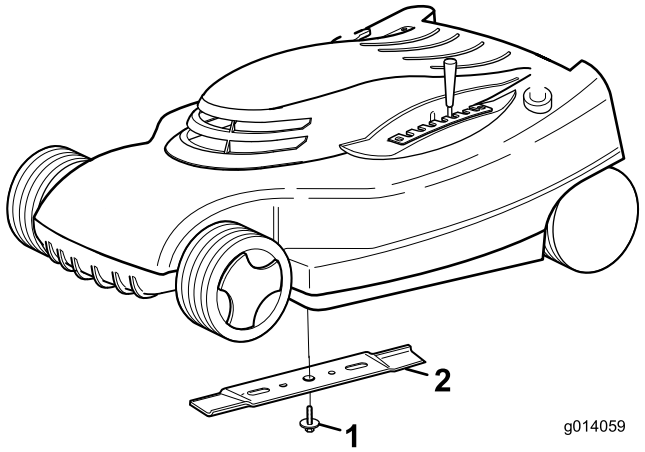

Figure 19

1. Blade bolt
2. Blade

2. Remove the blade bolt and the blade.

   Important: If the blade adapter comes off, ensure that you install it before installing the blade and

blade bolt. Operating the mower without the blade adapter will damage the mower.

Sharpening the Blade

Use a file to sharpen the top side of the blade and maintain the original cutting angle.

Note: The blade will remain balanced if you remove the same amount of material from both cutting edges.

Important: Check the balance of the blade by putting it on a blade balancer. You can purchase an inexpensive balancer at a hardware store. A balanced blade stays in a horizontal position; an unbalanced blade settles to the heavy side. If the blade is not balanced, file more metal off the cutting edge on the heavy end of the blade.

Installing the Blade

Install a sharp, balanced blade and the blade bolt. The sail part of the blade must point toward the top of the mower housing to ensure correct installation. Tighten the blade bolt to 20 N-m.

Servicing the On/Off and Blade Brake System

The motor and blade are designed to stop within 3 seconds after you release the control bar. Ensure that the control bar functions properly each time before you operate the mower. If the blade does not stop within 3 seconds or there is a grinding or scraping, metal-to-metal noise when you release the control bar, contact an Authorized Toro Service Dealer. This same recommendation applies if you observe heavy vibrations when using the mower.

Storage

1. Clean the mower housing.
2. Check the condition of the blade.
3. Fold the handle as shown in Figure 20 and Figure 21, depending on your model.

   Important: Ensure that you do not crimp the control cables as you fold the handle.

   ⚠ CAUTION

   The handles pass each other like a scissors while folding and unfolding them and can pinch your fingers.

   Keep your fingers clear of the pivot points and crossing handles as you fold or unfold the handles.

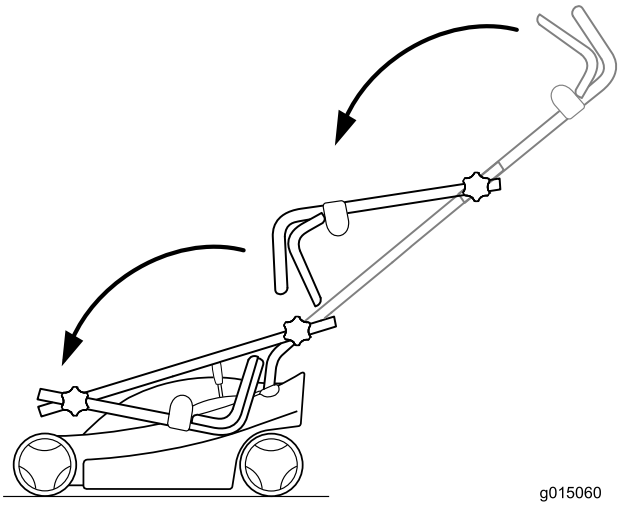

Figure 20
Model 21180 shown

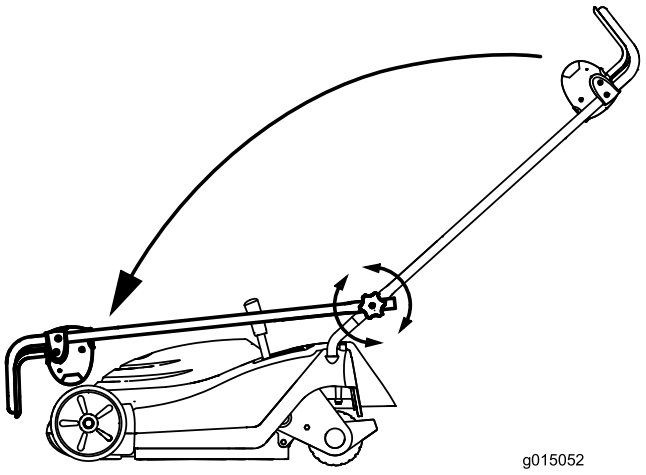

Figure 21
Model 21190 shown

4. Store the mower in a cool, clean, and dry place away from children.
5. Cover the mower to keep it clean and protected.

Troubleshooting

Problem	Possible Cause	Corrective Action
Motor will not start	1. The extension cord is not connected to the mower. 2. The extension cord is damaged. 3. The fuse or circuit breaker is blown.	1. Connect the extension cord to the mower and plug the other end of the extension cord into a normal household outlet. 2. Check the extension cord, and repair or replace the cord if it is damaged. 3. Check the outlet fuse or the circuit breaker.
Motor starts hard or loses power	1. The mower discharge chute is plugged. 2. The underside of the mower housing needs to be cleaned. 3. The cutting height is set too low.	1. Clean the mower discharge chute. 2. Clean the underside of the mower housing. 3. Set the mower cutting height in a higher position and start the motor again.
Mower or motor vibrates excessively	1. The blade is not balanced. 2. The blade mounting bolt is loose. 3. The mower discharge chute is plugged. 4. The underside of the mower housing needs to be cleaned. 5. The motor mounting bolts are loose.	1. Balance the blade. 2. Tighten the blade mounting bolt. 3. Clean the mower discharge chute. 4. Clean the underside of the mower deck. 5. Tighten the motor mounting bolts.
Uneven cutting pattern	1. The blade is dull and is not balanced. 2. You are mowing the same pattern every time you mow. 3. The underside of the mower housing needs to be cleaned.	1. Sharpen and balance the blade. 2. Change the mowing pattern. 3. Clean the underside of the mower deck.
Discharge chute plugs	1. The height-of-cut setting is set too low. 2. You are trying to mow wet grass. 3. The underside of the mower housing needs to be cleaned.	1. Raise the height-of-cut setting. 2. Allow the grass to dry before mowing. 3. Clean the underside of the mower deck.

Notes:

International Distributor List

Distributor:	Country:	Phone Number:	Distributor:	Country:	Phone Number:
Atlantis Su ve Sulama Sisstemleri Lt	Turkey	90 216 344 86 74	Jean Heybroek b.v.	Netherlands	31 30 659 4611
Balama Prima Engineering Equip.	Hong Kong	852 2155 2163	Maquiver S.A.	Colombia	57 1 236 4079
B-Ray Corporation	Korea	82 32 551 2076	Maruyama Mfg. Co. Inc.	Japan	81 3 3252 2285
Casco Sales Company	Puerto Rico	787 788 8383	Agrolanc Kft	Hungary	36 27 539 640
Ceres S.A.	Costa Rica	506 239 1138	Mountfield a.s.	Czech Republic	420 255 704 220
CSSC Turf Equipment (pvt) Ltd.	Sri Lanka	94 11 2746100	Munditol S.A.	Argentina	54 11 4 821 9999
Cyril Johnston & Co.	Northern Ireland	44 2890 813 121	Oslinger Turf Equipment SA	Ecuador	593 4 239 6970
Equiver	Mexico	52 55 539 95444	Oy Hako Ground and Garden Ab	Finland	358 987 00733
Femco S.A.	Guatemala	502 442 3277	Parkland Products Ltd.	New Zealand	64 3 34 93760
G.Y.K. Company Ltd.	Japan	81 726 325 861	Prochaska & Cie	Austria	43 1 278 5100
Geomechaniki of Athens	Greece	30 10 935 0054	RT Cohen 2004 Ltd.	Israel	972 986 17979
Guandong Golden Star	China	86 20 876 51338	Riversa	Spain	34 9 52 83 7500
Hako Ground and Garden	Sweden	46 35 10 0000	Sc Svend Carlsen A/S	Denmark	45 66 109 200
Hako Ground and Garden	Norway	47 22 90 7760	Solvert S.A.S.	France	33 1 30 81 77 00
Hayter Limited (U.K.)	United Kingdom	44 1279 723 444	Spypros Stavrinides Limited	Cyprus	357 22 434131
Hydroturf Int. Co Dubai	United Arab Emirates	97 14 347 9479	Surge Systems India Limited	India	91 1 292299901
Hydroturf Egypt LLC	Egypt	202 519 4308	T-Markt Logistics Ltd.	Hungary	36 26 525 500
Ibea S.P.A.	Italy	39 0331 853611	Toro Australia	Australia	61 3 9580 7355
Irriamc	Portugal	351 21 238 8260	Toro Europe NV	Belgium	32 14 562 960
Irrigation Products Int'l Pvt Ltd.	India	86 22 83960789			

European Privacy Notice

The Information Toro Collects
Toro Warranty Company (Toro) respects your privacy. In order to process your warranty claim and contact you in the event of a product recall, we ask you to share certain personal information with us, either directly or through your local Toro dealer.

The Toro warranty system is hosted on servers located within the United States where privacy law may not provide the same protection as applies in your country.

BY SHARING YOUR PERSONAL INFORMATION WITH US, YOU ARE CONSENTING TO THE PROCESSING OF YOUR PERSONAL INFORMATION AS DESCRIBED IN THIS PRIVACY NOTICE.

The Way Toro Uses Information
Toro may use your personal information to process warranty claims and to contact you in the event of a product recall. Toro may share your information with Toro's affiliates, dealers or other business partners in connection with any of these activities. We will not use personal information provided for warranty purposes for marketing, nor shall we give or sell personal information provided for warranty purposes to any other company for marketing. We reserve the right to disclose personal information in order to comply with applicable laws and with requests by the appropriate authorities, to operate its systems properly or for our own protection or that of other users.

Retention of your Personal Information
We will keep your personal information as long as we need it for the purposes for which it was originally collected or for other legitimate purposes (such as regulatory compliance), or as required by applicable law.

Toro's Commitment to Security of Your Personal Information
We take reasonable precautions in order to protect the security of your personal information. We also take steps to maintain the accuracy and current status of personal information.

Access and Correction of your Personal Information
If you would like to review or correct your personal information, please contact us by email at legal@toro.com.

Australian Consumer Law

Australian customers will find details relating to the Australian Consumer Law either inside the box or at your local Toro Dealer.

The Toro Warranty

Conditions and Products Covered

The Toro Company and its affiliate, Toro Warranty Company, pursuant to an agreement between them, jointly promise to the original purchaser* to repair the Toro Products listed below if defective in materials or workmanship.

The following time periods apply from the date of purchase:

Products	Warranty Period
Walk Power Mowers	
• Cast Deck	5 years Residential Use[2] 45 Days Commercial Use
• Engine	5 years GTS Promise See engine manufacturer's warranty[1]
• Steel Deck	2 years Residential Use[2] 45 Days Commercial Use
• Engine	2 years GTS Promise See engine manufacturer's warranty[1]
Electric Hand Held Products	2 year limited warranty
Snowthrowers	
• Single Stage	2 years Residential Use[2] 45 Days Commercial Use
• Two Stage	2 years Residential Use[2] 45 Days Commercial Use
• Electric	2 years Residential Use[2]
All Ride-On Units Below	
• Engine	See engine manufacturer's warranty[1] 1 year Parts only
• Attachments	1 year
Rear Engine Riders	2 years Residential Use[2] 90 Days Commercial Use
Lawn & Garden Tractors	2 years Residential Use[2] 90 Days Commercial Use
TimeCutter Z Mowers	3 years Residential Use[2] 30 Days Commercial Use
TITAN Mowers	3 years or 240 hours[3]
• Frame	Lifetime (original owner only)[4]
TITAN MX Mowers	3 years or 400 hours[3]
• Frame	Lifetime (original owner only)[4]
Z Master Mowers — 2000 Series	5 years or 1200 hours[3]
• Frame	Lifetime (original owner only)[4]

*Original Purchaser means the person who originally purchased the Toro Product.

[1]Some engines used on Toro Products are warranted by the engine manufacturer.

[2]Residential use means use of the product on the same lot as your home. Use at more than one location is considered commercial use and the commercial use warranty would apply.

[3]Whichever occurs first.

[4]Lifetime Frame Warranty - If the main frame, consisting of the parts welded together to form the tractor structure that other components such as the engine are secured to, cracks or breaks in normal use, it will be repaired or replaced, at Toro's option, under warranty at no cost for parts and labor. Frame failure due to misuse or abuse and failure or repair required due to rust or corrosion are not covered.

This warranty includes the cost of parts and labor, but you must pay transportation costs.

Warranty may be denied if the hour meter is disconnected, altered, or shows signs of being tampered with.

Owner Responsibilities

You must maintain your Toro Product by following the maintenance procedures described in the *Operator's Manual*. Such routine maintenance, whether performed by a dealer or by you, is at your expense.

Instructions for Obtaining Warranty Service

If you think that your Toro Product contains a defect in materials or workmanship, follow this procedure:

1. Contact your seller to arrange service of the product. If for any reason it is impossible for you to contact your seller, you may contact any Toro Authorized Distributor to arrange service.
2. Bring the product and your proof of purchase (sales receipt) to the Service Dealer. If for any reason you are dissatisfied with the Service Dealer's analysis or with the assistance provided, contact us at:

   Customer Care Department, RLC Division
   The Toro Company
   8111 Lyndale Avenue South
   Bloomington, MN 55420-1196
   Manager: Technical Product Support: 001–952–887–8248

   See attached Distributor List

Items and Conditions Not Covered

This express warranty does not cover the following:

- Cost of regular maintenance service or wear parts, such as blades, rotor blades (paddles), scraper blades, belts, fuel, lubricants, oil changes, spark plugs, cable/linkage or brake adjustments
- Any product or part which has been altered or misused and requires replacement or repair due to accidents or lack of proper maintenance
- Repairs necessary due to failure to use fresh fuel (less than one month old), or failure to properly prepare the unit prior to any period of non-use over one month
- Engine and transmission. These are covered by the appropriate manufacturer's guarantees with separate terms and conditions

All repairs covered by these warranties must be performed by an Authorized Toro Service Dealer using Toro approved replacement parts.

General Conditions

The purchaser is covered by the national laws of each country. The rights to which the purchaser is entitled with the support of these laws are not restricted by this warranty.