FORM NO. 3319–121 Rev. B

TORO®

MODEL NO. 07210 – 70001
THRU 80001 & Up

OPERATOR'S MANUAL

WORKMAN® 3100

Air Cooled Gasoline Utility Vehicle

To assure maximum safety, optimum performance, and to gain knowledge of the product, it is essential that you or any other operator of the machine read and understand the contents of this manual before the engine is ever started. Pay particular attention to the SAFETY INSTRUCTIONS highlighted by this symbol–

The safety alert symbol means CAUTION, WARNING or DANGER — personal safety instruction. Failure to comply with the instruction may result in personal injury or death.



© The TORO Company – 1996, Rev. 1997

FOREWORD

The TORO WORKMAN® 3100 was developed to provide an efficient, versatile, trouble free and economical work vehicle. The latest concepts of engineering, design and safety have been incorporated into this machine, along with the highest quality parts and workmanship. Excellent service will be derived if proper operation and maintenance practices are followed.

WARNING

The WORKMAN® is an off−highway vehicle only, and is not designed, equipped, or manufactured for use on public streets, roads or highways.

You know, since you have purchased the industry leader in maintenance excellence, that future performance and dependability are of prime importance. TORO also is concerned about future use of the machine and of safety to the user. Therefore, this manual must be read by you and those involved with the WORKMAN® 3100 to make sure that safety, proper set-up, operation and maintenance procedures are followed at all times. The major sections of the manual are:

1. Safety Instructions
2. Set-Up Instructions
3. Before Operating
4. Operating Instructions
5. Maintenance

Safety, mechanical and some general information in this manual are emphasized. **DANGER**, **WARNING** and **CAUTION** identify safety messages. Whenever the triangle safety symbol appears, it is followed by a safety message that must be read and understood. For more details concerning safety, read the safety instructions on pages 4 and 5. **IMPORTANT** identifies special mechanical information and **NOTE** identifies general information worthy of special attention.

WARNING:

The engine exhaust from this product contains chemicals known to the State of California to cause cancer, birth defects, or other reproductive harm.

FOREWORD

The TORO WORKMAN® 3100 meets the requirements of ANSI B56.8a–1994.

Supervisors, operators and service persons should be familiar with the following standards and publications: (The material may be obtained from the address shown).

- Flammable and Combustible Liquids Code:
  ANSI/NFPA 30
- National Fire Protection Association:
  ANSI/NFPA #505; Powered Industrial Trucks
  ADDRESS:
  National Fire Prevention Association
  Barrymarch Park
  Quincy, Massachusetts 02269 U.S.A
- ANSI/ASME B56.8 Personal Burden Carriers
  ADDRESS:
  American National Standards Institute, Inc.
  1430 Broadway
  New York, New York 10018 U.S.A.
- ANSI/UL 558; Internal Combustion Engine Powered Industrial Trucks
  ADDRESS:
  American National Standards Institute, Inc.
  1430 Broadway
  New York, New York 10018 U.S.A.
  OR
  Underwriters Laboratories
  333 Pfingsten Road
  Northbrook, Illinois 60062 U.S.A.

OPTIONAL SPARK ARRESTER

In some places a spark arrester muffler must be used because of local, state or federal regulations. The spark arrester available from your local Toro Distributor is approved by the United States Department of Agriculture and the United States Forest Service.

When the machine is used or operated on any California forest, brush or grass covered land, a properly operating spark arrester must be attached to the muffler. The operator is violating state law, Section 442 Public Resources Code if a spark arrester is not used.

If help concerning set up, operation, maintenance or safety is ever needed, contact your local Authorized TORO Distributor. In addition to genuine TORO replacement parts, the distributor also has optional equipment for the complete line of TORO turf care equipment. Keep your TORO all TORO. Buy genuine TORO parts and accessories.

TABLE OF CONTENTS

SAFETY INSTRUCTIONS 5–7
SAFETY AND INSTRUCTION DECALS 7–9
SPECIFICATIONS 10
LOOSE PARTS CHART 11
SET–UP INSTRUCTIONS 12–14
Install Wheels 12
Install Steering Wheel 12
Install Front Fenders 12
Install Seat Frame 12
Install Seat Back Cushions, Manual Tube and Bed Support 13
Install ROPS 13
Activate and Charge Battery 14
BEFORE OPERATING 15–17
Check Crankcase Oil 15
Fill Fuel Tank 15
Check Transaxle / Hydraulic Fluid 16
Check Brake Fluid 16
Check Torque Of Wheel Nuts Or Bolts 16
Check Tire Pressure 17
CONTROLS 18–20
OPERATING INSTRUCTIONS 20–26
Pre–starting Checks 20
Starting Engine 20
Driving Vehicle 20
Stopping Vehicle 21
Stopping Engine 21
New Vehicle Break–in 21
Check Interlock System 21
Operating Characteristics 21
Passengers 22
Speed 22
Turning 22
Braking 22
Tipovers 23
Hills 24
Loading And Dumping 24
Using The Differential Lock 25
Transporting Vehicle 25
Towing Vehicle 25
Trailer Towing 26
MAINTENANCE CHART & CHECKLIST 27
SERVICE INTERVAL CHART 28
LUBRICATION 28–29
MAINTENANCE 30
Using Bed Safety Support 30
Jacking Vehicle 30
Servicing Air Cleaner 31
Changing Engine Oil And Filter 31
Fuel System 32
Removing Debris From Engine 32
Adjusting Belt 32
Adjusting Carburetor 33
Adjusting Choke 33
Replacing Spark Plugs 33
Adjusting Accelerator 34
Changing Transaxle / Hydraulic Fluid 34
Replacing Hydraulic Filter 34
Cleaning Hydraulic Strainer 35
Adjusting Brake Pedal 35
Adjusting Clutch Pedal 36
Adjusting Parking Brake 36
Adjusting Shift Cables 36
Adjusting High–Low Cable 37
Adjusting Differential Lock Cable 37
Inspect Brakes 37
Inspect Tires 37
Front Wheel Toe–in 37
Emergency Box Raising (Without Starting Engine) 38
Fuses 38
Jump Starting Procedure 38
Battery Storage 39
Battery Care 39
MAINTENANCE SCHEDULE 40
HYDRAULIC SCHEMATIC 41
ELECTRICAL SCHEMATIC 42
IDENTIFICATION AND ORDERING 43
Model And Serial Numbers 43
THE TORO PROMISE . . . . . BACK COVER

SAFETY INSTRUCTIONS

The WORKMAN® 3100 was designed and tested to offer safe service when operated and maintained properly. Although hazard control and accident prevention partially are dependent upon the design and configuration of the machine, these factors are also dependent upon the awareness, concern, and proper training of the personnel involved in the operation, maintenance and storage of the machine. Improper use or maintenance of the machine can result in injury or death.

This is a specialized utility vehicle designed for off−road use only. Its ride and handling will have a different feel than what drivers experience with passenger cars or trucks. So take time to become familiar with your WORKMAN® 3100.

Not all of the attachments that adapt to the WORKMAN® 3100 are covered in this manual. See the specific Operator's Manual provided with attachment for additional safety instructions. READ THESE MANUALS.

TO REDUCE THE POTENTIAL FOR INJURY OR DEATH, COMPLY WITH THE FOLLOWING SAFETY INSTRUCTIONS.

SUPERVISOR'S RESPONSIBILITIES

1. Make sure operators are thoroughly trained and familiar with the Operator's Manual and all labels on the vehicle.

2. Be sure to establish your own special procedures and work rules for unusual operating conditions (e.g. slopes too steep for vehicle operation). Use the 3rd High Lockout switch if high speed could result in a safety or vehicle abuse situation.

BEFORE OPERATING

3. Operate the machine only after reading and understanding the contents of this manual. A replacement manual is available by sending complete model and serial number to: The Toro Company, 8111 Lyndale Avenue South, Minneapolis, Minnesota 55420−1196.

4. Never allow children to operate the vehicle. Never allow adults to operate it without proper instructions. Only trained and authorized persons should operate this vehicle. Make sure all operators are physically and mentally capable of operating the vehicle. Anyone who operates the vehicle should have a motor vehicle license.

5. This vehicle is designed to carry only you, the operator, and one passenger in the seat provided by the manufacturer. Never carry any other passengers on the vehicle.

6. Never operate the vehicle when under the influence of drugs or alcohol.

7. Become familiar with the controls and know how to stop the engine quickly.

8. Keep all shields, safety devices and decals in place. If a shield, safety device or decal is malfunctioning, illegible, or damaged, repair or replace it before operating the machine.

9. Always wear substantial shoes. Do not operate machine while wearing sandals, tennis shoes or sneakers. Do not wear loose fitting clothing or jewelry which could get caught in moving parts and cause personal injury.

10. Wearing safety glasses, safety shoes, long pants and a helmet is advisable and required by some local safety and insurance regulations.

11. Keep everyone, especially children and pets, away from the areas of operation.

12. Before operating the vehicle, always check all parts of the vehicle and any attachments. If something is wrong, stop using vehicle. Make sure problem is corrected before vehicle or attachment is operated again.

13. Since gasoline is highly flammable, handle it carefully.

A. Use an approved gasoline container.

B. Do not remove cap from fuel tank when engine is hot or running.

C. Do not smoke while handling gasoline.

D. Fill fuel tank outdoors and to about one inch below top of tank (bottom of filler neck). Do not overfill.

E. Wipe up any spilled gasoline.

14. Check the safety interlock system daily for proper operation; refer to page 20. If a switch should malfunction, replace the switch before operating machine. After every two years, replace the interlock switches in the safety system, whether they are working properly or not.

WHILE OPERATING

WARNING: Engine exhaust contains carbon monoxide which is an odorless, deadly poison. Carbon monoxide is also known to the State of California to cause birth defects. Do not run engine indoors or in an enclosed area.

15. Operator and passenger should remain seated whenever the vehicle is in motion. Operator should keep both hands on steering wheel, whenever possible and passenger should use hand holds provided. Keep arms and legs within the vehicle body at all times. Never carry passengers in box or on attachments. Remember your passenger may not be expecting you to brake or turn and may not be ready.

SAFETY INSTRUCTIONS

16. Never overload your vehicle. Name plate (located under dash on passenger side) shows load limits for vehicle. Never overfill attachments or exceed the vehicle maximum GVW.

17. When starting the engine:

A. Sit on operator's seat and engage parking brake.

B. Disengage PTO's (if so equipped) and return hand throttle lever to OFF position (if so equipped).

C. Move shift lever to NEUTRAL and depress clutch pedal.

D. Pull up choke knob when engine is cold.

E. Depress and hold accelerator pedal about halfway.

F. Turn ignition key to START.

G. Push choke knob down as engine warms up.

18. Using the machine demands attention. Failure to operate vehicle safely may result in a accident, tip over of vehicle and serious injury or death. Drive carefully. To prevent tipping or loss of control:

A. Use extreme caution, reduce speed and maintain a safe distance around sand traps, ditches, creeks, ramps, any unfamiliar areas or other hazards.

B. Watch for holes or other hidden hazards.

C. Use caution when operating vehicle on a steep slope. Normally travel straight up and down slopes. Reduce speed when making sharp turns or when turning on hillsides. Avoid turning on hillsides whenever possible.

D. Use extra caution when operating vehicle on wet surfaces, at higher speeds or with a full load. Stopping time will increase with a full load. Shift into a lower gear before starting up or down a hill.

E. When loading bed, distribute load evenly. Use extra caution if the load exceeds the dimensions of the vehicle/bed. Operate vehicle with extra caution when handling off−center loads that cannot be centered. Keep loads balanced and secure to prevent them from shifting.

F. Avoid sudden stops and starts. Do not go from reverse to forward or forward to reverse without first coming to a complete stop.

G. Do not attempt sharp turns or abrupt maneuvers or other unsafe driving actions that may cause a loss of vehicle control.

H. When dumping, do not let anyone stand behind vehicle and do not dump load on any one's feet. Release tailgate latches from side of box, not from behind.

I. Before backing up, look to the rear and assure no one is behind. Back up slowly.

J. Watch out for traffic when near or crossing roads. Always yield the right of way to pedestrians and other vehicles. This vehicle is <u>not</u> designed for use on streets or highways. Always signal your turns or stop early enough so other persons know what you plan to do. Obey all traffic rules and regulations.

K. Never operate vehicle in or near an area where there is dust or fumes in the air which are explosive. The electrical and exhaust systems of the vehicle can produce sparks capable of igniting explosive materials.

L. Always watch out for and avoid low over hangs such as tree limbs, door jambs, over head walkways, etc. Make sure there is enough room over head to easily clear the vehicle and your head.

M. If ever unsure about safe operation, STOP WORK and ask your supervisor.

19. Do not touch engine, transaxle, radiator, manifold, muffler or manifold shield while engine is running or soon after it has stopped because these areas may be hot enough to cause burns.

20. If the machine ever vibrates abnormally, stop immediately, turn engine off, wait for all motion to stop and inspect for damage. Repair all damage before commencing operation.

21. Before getting off the seat:

A. Stop movement of the machine.

B. Lower bed.

C. Shut engine off and wait for all movement to stop.

D. Set parking brake.

E. Remove key from ignition.

F. Block wheels if machine is on an incline.

MAINTENANCE

22. Before servicing or making adjustments to the machine, stop engine, set parking brake and remove key from ignition to prevent accidental starting of the engine.

23. Never work under a raised bed without placing bed safety support on fully extended cylinder rod.

24. Make sure all hydraulic line connectors are tight, and all hydraulic hoses and lines are in good condition before applying pressure to the system.

SAFETY INSTRUCTIONS

25. Keep body and hands away from pin hole leaks or nozzles that eject hydraulic fluid under high pressure. Use paper or cardboard, not hands, to search for leaks. Hydraulic fluid escaping under pressure can have sufficient force to penetrate skin and do serious damage. If fluid is injected into the skin it must be surgically removed within a few hours by a doctor familiar with this form of injury or gangrene may result.

26. Before disconnecting or performing any work on the hydraulic system, all pressure in system must be relieved by stopping engine, cycling dump valve from raise to lower and/or lowering box and attachments. Place the remote hydraulics lever in the float position. If box must be in raised position, secure with safety support.

27. To make sure entire machine is in good condition, keep all nuts, bolts and screws properly tightened.

28. To reduce potential fire hazard, keep the engine area free of excessive grease, grass, leaves and accumulation of dirt.

29. If the engine must be running to perform a maintenance adjustment, keep hands, feet, clothing, and any parts of the body away from the engine and any moving parts. Keep everyone away.

30. Do not overspeed engine by changing governor settings. Maximum engine speed is 3650 rpm. To assure safety and accuracy, have an Authorized TORO Distributor check maximum engine speed with a tachometer.

31. If major repairs are ever needed or assistance is required, contact an Authorized TORO Distributor.

32. To be sure of optimum performance and safety, always purchase genuine TORO replacement parts and accessories. Replacement parts and accessories made by other manufacturers could be dangerous. Altering this vehicle in any manner may affect the vehicle's operation, performance, durability or its use may result in injury or death. Such use could void the product warranty of The TORO Company.

33. This vehicle should not be modified without the TORO Company's authorization. Direct any inquiries to:

The TORO Company
Commercial Division
Vehicle Engineering Dept.
300 West 82nd St.
Bloomington, Minnesota 55420−1196. USA

SOUND PRESSURE LEVEL

This unit has an equivalent continuous A-weighted sound pressure at the operator ear of 82 dB(A) based on measurements of identical machines per Directive 84/538/EEC and amendments.

VIBRATION LEVEL

Hand-Arm

This unit does not exceed a vibration level of 2.5 m/s^2, at the hands based on measurements of identical machines per ISO 5349 procedures.

WHOLE BODY

This unit does not exceed a vibration level of .5 m/s^2 at the posterior based on measurements of identical machines per ISO 2631 procedures.

SAFETY AND INSTRUCTION DECALS

The following safety and instruction decals are installed on the machine. If any become damaged or illegible, replace them. Decal part numbers are listed below and in the parts catalog. Order replacements from your Authorized TORO Distributor.

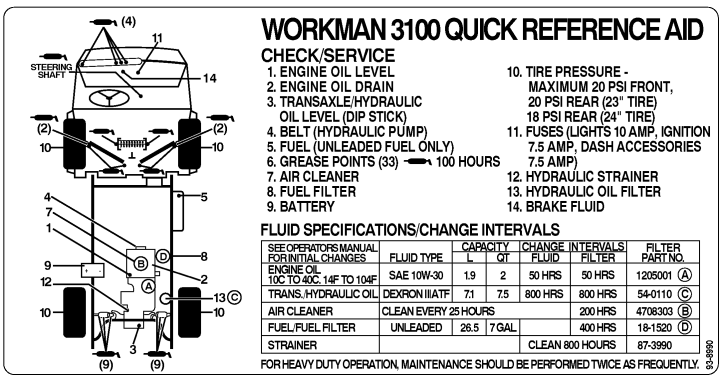

ON REAR OF SKIRT
(Part No. 93−8990)

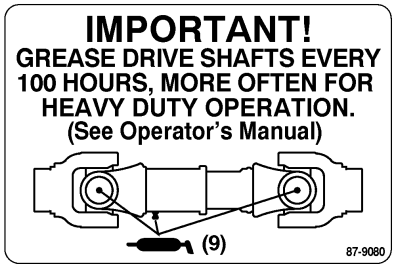

ON REAR AXLE TUBE
(Part No. 87−9080)

SAFETY AND INSTRUCTION DECALS



ON LEFT FRAME RAIL
AND NEAR ENGINE
MANIFOLD
(Part No. 66–6840)

OPTIONAL FUSE BLOCK	OPTIONAL FUSE BLOCK	STANDARD FUSE BLOCK
		OPEN
		LIGHTS 10 AMP
		DASH 7.5 AMP
		IGNITION 7.5 AMP

87 - 6670

UNDER DASH NEXT
TO FUSE BLOCK
(Part No. 87–6670)



ON SKIRT
(Part No. 87–5920)



ON SPRING CRADLE
(Part No. 44–0760)



ON CONSOLE
(Part No. 87–6000)

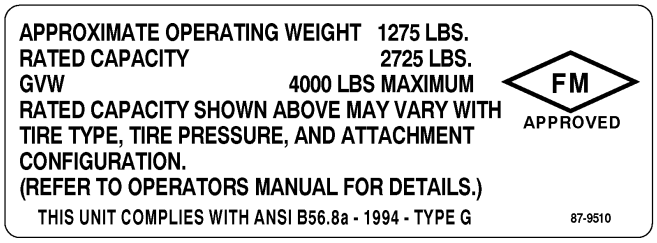

UNDER RIGHT SIDE OF DASH
(Part No. 87–9510)

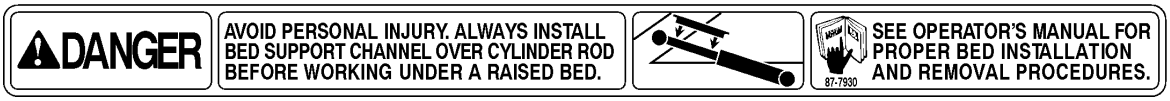

ON LIFT CYLINDERS & BED SUPPORT
(Part No. 87–7930)

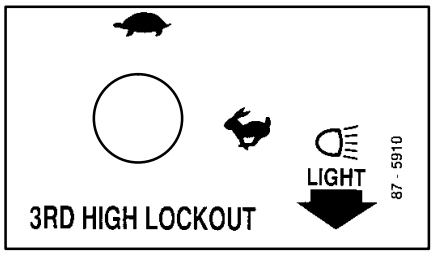

ON DASH
(Part No. 87–5910)

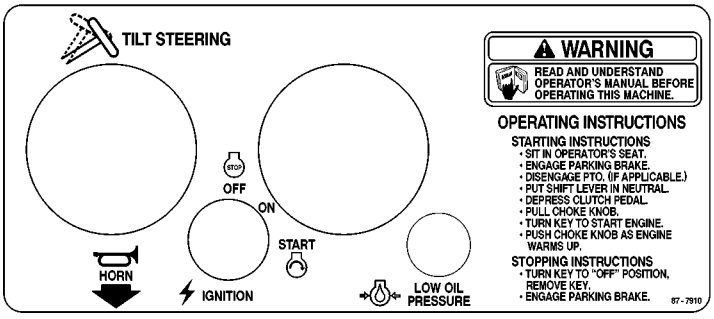

ON DASH
(Part No. 87–7910)

SAFETY AND INSTRUCTION DECALS

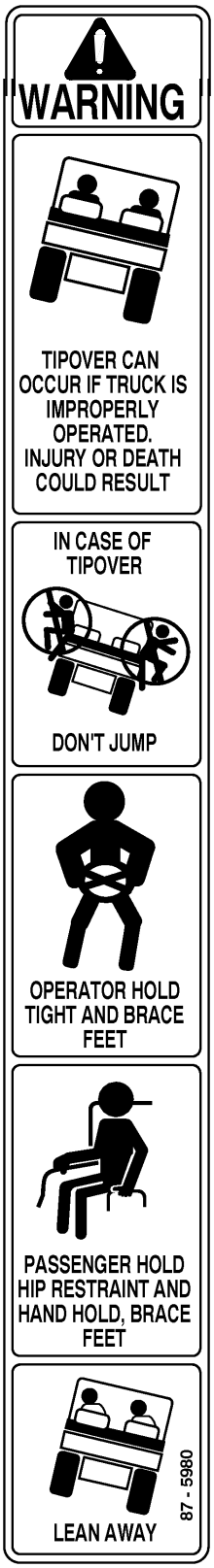

ON ROPS
(Part No. 87−5980)



ON CONSOLE
(Part No. 87−6020)

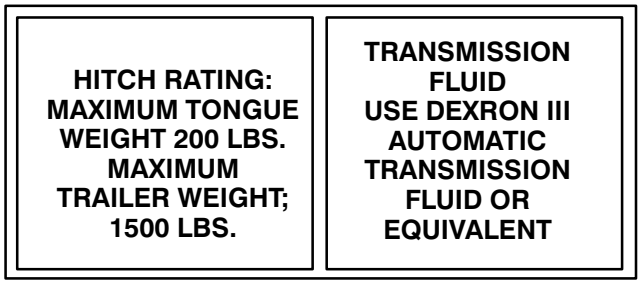

ON AXLE TUBE
(Part No. 87−6060)

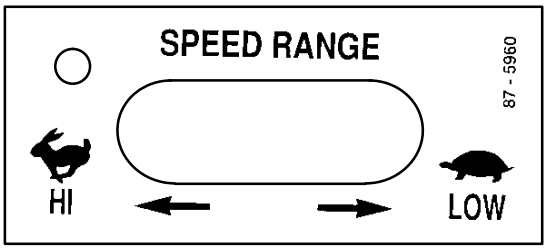

ON CONSOLE
(Part No. 87−5960)

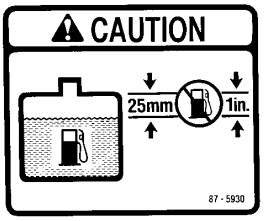

ON SKIRT
(Part No. 87−5930)



ON BATTERY COVER
(Part No. 36−3400)



ON DASH
(Part No. 94−5272)

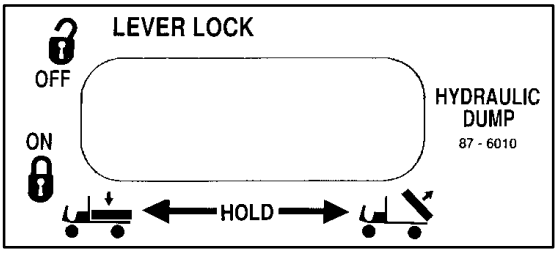

ON CONSOLE
(Part No. 87−6010)

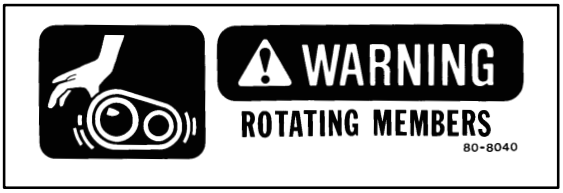

ON FAN SUPPORT
(Part No. 80−8040)



ON ROPS
(Part No. 87−5940)

SPECIFICATIONS

Type: 4 wheel step through, out front operator style, two person vehicle. Certified to meet ANSI Specifications B56.8a–1994.

Engine: Kohler, 4 cycle, air cooled, 22 hp @ 3600 rpm, 38.1 cu. in. (624 cc) displacement. Mechanical fuel pump, 2 qt. oil capacity. Large capacity dual element air cleaner.

Battery: 12 volt with 370 cold cranking Amps @ 0 degrees F.

Fuel System: Gasoline tank capacity is 7 gallons.

Transmission: Rear transaxle configuration, twin axle drive. 3 speed synchromesh, H–shift pattern with high–low range providing 6 forward and 2 reverse speeds. Manual engage differential lock.

Clutch: 6.7" clutch and pressure plate.

Frame: Welded, high strength steel channels and tubes.

Front Suspension: Independent "A" frame control arm, dual coil springs and dual shock absorbers with anti–sway bar.

Rear Suspension: DeDion axle (weight carrying axle is independent of transaxle), leaf spring and dual shock absorbers.

Steering System: Power assist, 3 position tilt steering wheel, 3–3/4 turns lock–to–lock. 17.5 to 1 ratio, 13.5" diameter steering wheel.

Tires: Front tires: 20" x 10"-10, 4-ply rating, rib tread.
Rear tires: 23" x 10.5"-12, 4-ply rating, turf tread.
Optional Rear tires: 24" x 13"-12, 4-ply rating, turf tread.

Brakes: 4 wheel hydraulic, dual safety circuit self adjusting drum: 7" diameter front, 8" diameter rear. Hand actuated parking brake actuates rear brake shoes.

ROPS: 2 post roll over protection structure with shoulder restraint.

Hydraulics: 4 gpm pressure balanced gear pump provides hydraulic flow for power steering, lift and optional remote hydraulics. Lift control valve and dual cylinders for lifting dump box. Transaxle is used for reservoir for hydraulic system. 8 quart total capacity. Spin–on 10 micron hydraulic oil filter. 100 mesh strainer in transaxle.

Seat: Twin molded cushions and backrests, with shoulder and hip restraints.

Controls: Foot operated accelerator, clutch and brake pedals. Hand operated shifter, differential lock, parking brake, high–low range shifter, hydraulic lift and tilt steering levers. Ignition switch, light switch, choke knob, horn button and 3rd high lockout switch.

Gauges: Hour meter, oil pressure warning light and fuel gauge. Tachometer optional.

Lights: Twin halogen headlights and single taillight. Rear stop light.

Tow Hitch: Hitch has hole for ball or pin.

Interlocks: Clutch pedal must be depressed to start engine.

Ground Speed:

Forward Speeds w/23" Tires–
High range: 7.3/11.0/19 mph
Low range: 2.8/4.3/7.4 mph
Reverse Speeds w/23" Tires–
High range: 6.9 mph
Low range: 2.7 mph

General Specifications (approx.):

Base Weight:	Dry w/o flatbed 1275 lbs.
Rated Capacity:	*2,725 lbs. *includes 200 lb. operator and 200 lb. passenger and loaded attachment.
Maximum. Gross Vehicle Weight:	4,000 lbs.
Tow Capacity	Tongue weight 200 lbs. Maximum trailer weight 1,500 lbs.
Overall Width:	58" w/23" tires
Overall Length:	124.5"w/o bed 127" w/full bed 133" w/2/3 bed in rear mounting location
Height:	75" to top of ROPS
Ground Clearance:	7" w/ no load
Wheel Base:	70"
Wheel Tread: (center line to center line)	46" Front 47.7" Rear (w 23" Rear Tire)

Specifications and design subject to change without notice.

LOOSE PARTS CHART

Note: Use this chart as a checklist to assure all parts necessary for assembly have been received. Without these parts, total set-up cannot be completed. Some parts may have already been assembled at factory.

DESCRIPTION	QTY.	USE
Wheel Nut Wheel−Front Wheel Nut Wheel−Rear	10 2 10 2	Mount wheels.
Steering wheel Foam Seal Washer Nut Cap	1 1 1 1 1	Install steering wheel.
Fenders−Front Phillips Screw 10−24 Washer Locknut 10−24	2 14 14 14	Install front fenders
Seat Frame Seat Frame Bracket Carriage Bolts 3/8−16 x 3/4” lg. Flange Locknut 3/8−16 Capscrew 1/2−13 x 1” lg. Locknut 1/2−13 Capscrew 3/8−16 x 1” lg. Lockwasher 3/8−16	1 2 4 4 2 2 2 2	Install seat frame
Seat Back Cushion Seat Back Bracket Capscrew 1/4−20 x 3/4” lg. Washer 1/4” Carriage Bolts 5/16−18 x 5/8” lg. Flange Locknuts 5/16−18 Manual Tube R−Clamp	2 4 8 8 8 8 1 2	Install seat back cushion and manual tube
ROPS Capscrew 1/2−13 x 3” lg. Locknuts 1/2−13	1 4 4	Mount ROPS
Operator’s Manual (Vehicle) Parts Catalog	2 1	Read before operating machine.
Registration Card	1	Fill out and return to Toro

SET−UP INSTRUCTIONS

INSTALL WHEELS (Fig. 1)

1. Remove and discard fasteners securing wheels.

2. Mount wheels and torque nuts to 45-55 ft-lb.

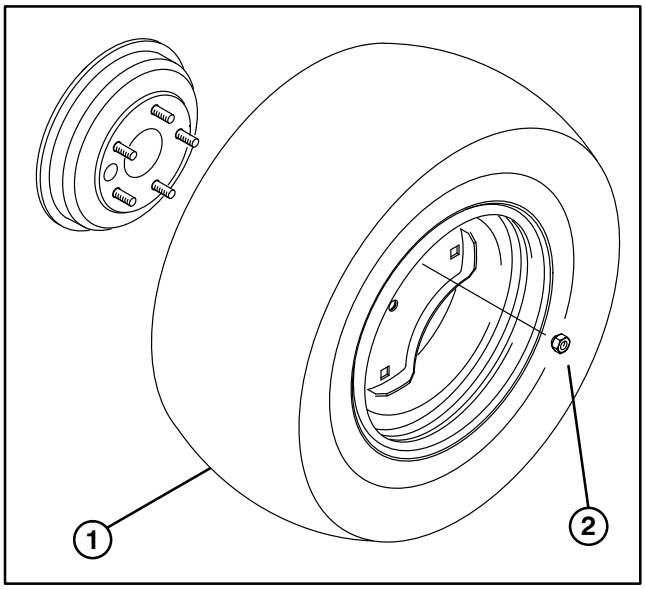

Figure 1
1. **Wheel**
2. **Wheel Nut**

INSTALL STEERING WHEEL (Fig. 2)

1. Remove jam nut from steering shaft. Slide foam seal, steering wheel and washer onto steering shaft.

2. Secure steering wheel to shaft with jam nut and tighten it to 10−15 ft-lb.

3. Install cap to steering wheel.

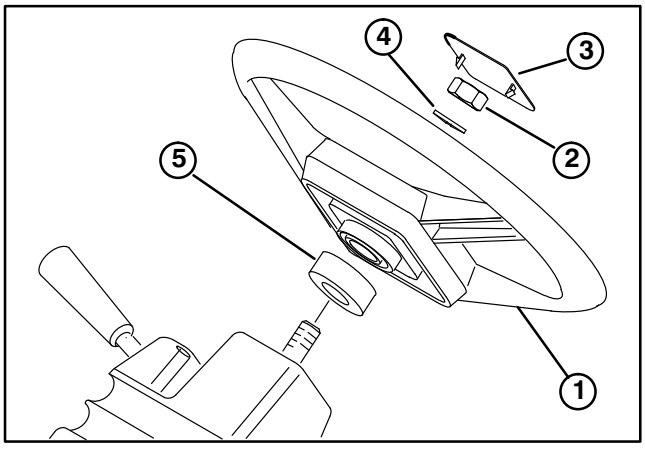

Figure 2
1. **Steering Wheel**
2. **Jam Nut**
3. **Cap**
4. **Washer**
5. **Foam Seal**

INSTALL FRONT FENDERS (Fig. 3)

1. Mount a fender to each side of skirt with (7) 10−24 Phillips screws, flat washers and locknuts.

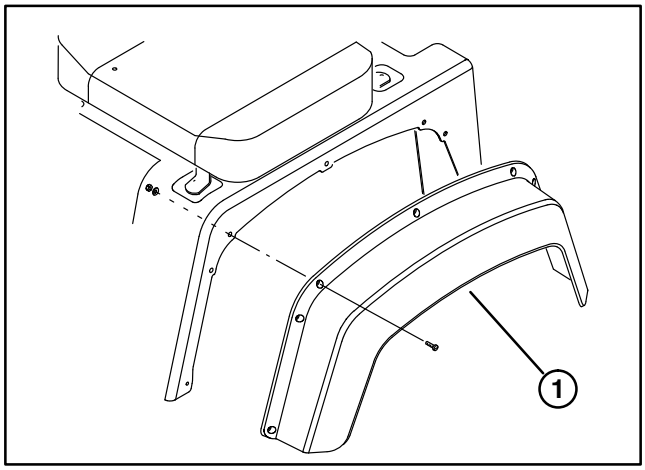

Figure 3
1. **Fender**

INSTALL SEAT FRAME (Fig. 4)

1. Mount a seat frame bracket to each end of seat frame with (2) 3/8−16 x 3/4" carriage bolts and flange locknuts.

2. Position seat frame on vehicle, aligning mounting holes in frame with holes in vehicle.

3. Secure front legs of seat frame to sides of vehicle floor with (2) 1/2−13 x 1" lg. capscrews and locknuts.

4. Secure bottom of each seat frame bracket to vehicle frame with a 3/8−16 x 1" capscrew and lockwasher.

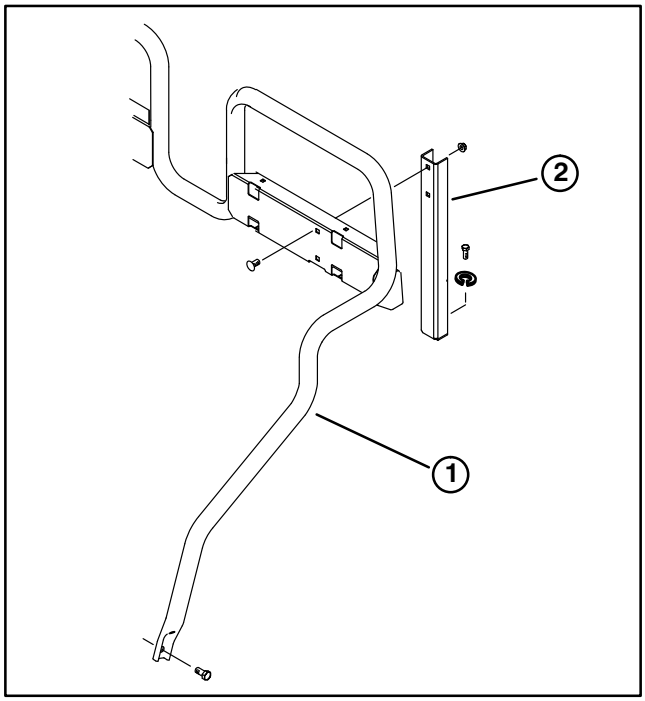

Figure 4
1. **Seat frame**
2. **Seat frame bracket**

SET−UP INSTRUCTIONS

INSTALL SEAT BACK CUSHIONS, MANUAL TUBE AND BED SUPPORT (Fig. 5 − 7)

1. Mount (2) seat back brackets to each seat back cushion with (4) 1/4−20 x 3/4" lg. capscrews and 1/4" flat washers. Position brackets on seat back cushions as shown in figure 5.

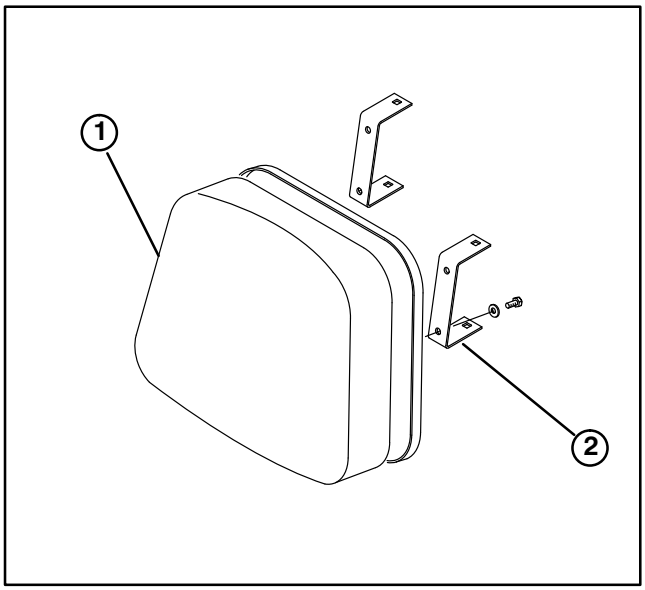

Figure 5
1. **Cushion seat back**
2. **Seat back bracket**

2. Mount cushion with seat back brackets to right side of seat back with (4) 5/16−18 x 5/8" lg. carriage bolts and flange locknuts.

3. Slide manual tube into (2) R−clamps.

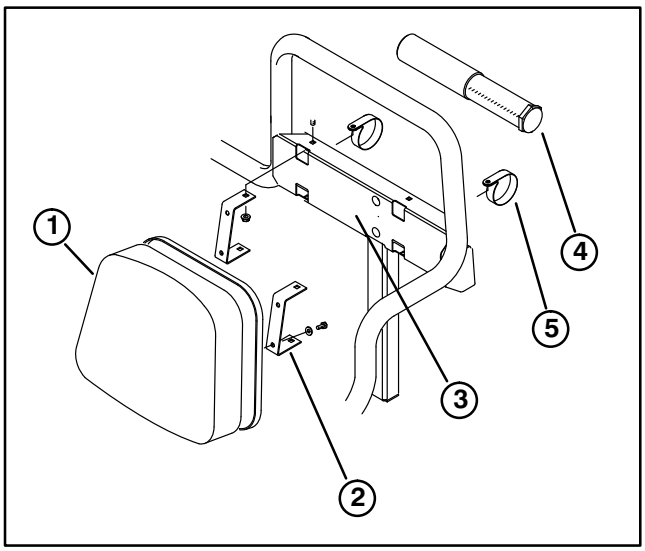

Figure 6
1. **Cushion seat back**
2. **Seat back bracket**
3. **Seat back**
4. **Manual tube**
5. **R−clamp**

4. Mount cushion with seat back brackets and manual tube R−clamps to left seat back with (4) 5/16−18 x 5/8" lg. carriage bolts and flange locknuts.

5. Slide bed support onto storage stud (Fig. 7).

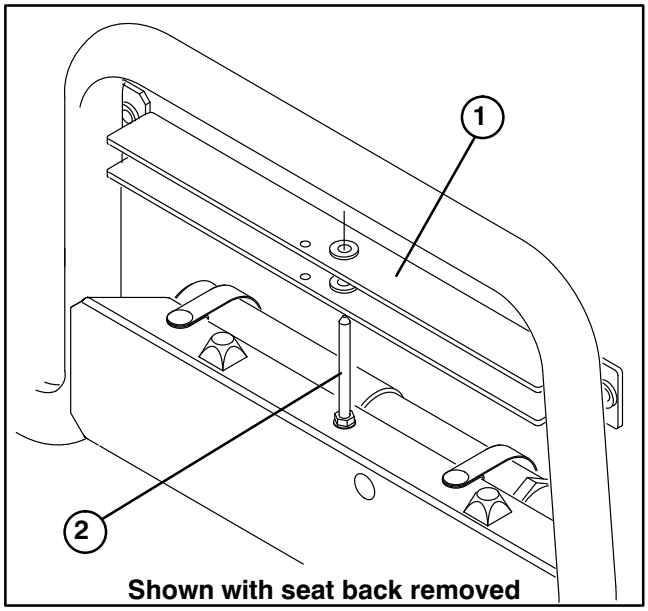

Figure 7
1. **Bed support**
2. **Storage stud**

INSTALL ROPS (Fig. 8)

1. Insert each side of ROPS into mounting bracket on each side of vehicle frame, positioning ROPS as shown in figure 8.

2. Secure each side of ROPS to mounting brackets with (2) 1/2−13 x 3" lg. capscrews and locknuts.

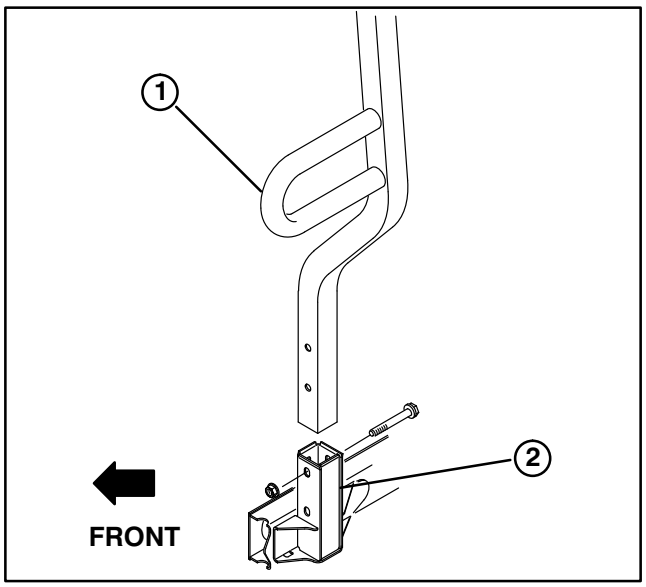

Figure 8
1. **ROPS**
2. **Mounting brackets**

SET–UP INSTRUCTIONS

ACTIVATE AND CHARGE BATTERY

(Fig. 9 & 10)

If Battery is not filled with electrolyte or activated, it must be removed from vehicle, filled with electrolyte and charged. Bulk electrolyte with 1.260 specific gravity can be purchased from a local battery supply outlet.

CAUTION

Electrolyte gases are explosive and can cause serious injury to eyes, lungs and skin. Wear safety goggles and rubber gloves when working with electrolyte or battery. Charge the battery in a well ventilated place so gasses produced while charging can dissipate. Since the gases are explosive, keep open flames and electrical spark away from the battery; do not smoke. Nausea may result if the gases are inhaled. Unplug charger from electrical outlet before connecting to or disconnecting charger leads from battery posts.

1. Loosen knobs securing battery cover to battery base and slide cover off.

2. Remove capscrew, washers and locknut securing battery hold down to battery base. Remove hold down and slide battery out of battery base.

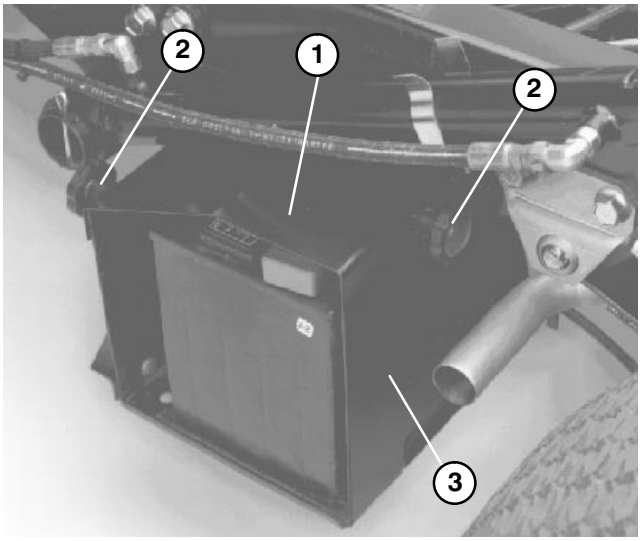

Figure 9

1. **Battery cover**
2. **Knob**
3. **Battery base**

3. Remove filler caps from battery and slowly fill each cell until electrolyte is just above the plates.

4. Replace filler caps and connect a 3 to 4 amp battery charger to the battery posts. Charge the battery at a rate of 3 to 4 amperes for 4 to 8 hours.

5. When battery is charged, disconnect charger from electrical outlet and battery posts.

6. Remove filler caps. Slowly add electrolyte to each cell until level is up to fill ring. Install filler caps.

IMPORTANT: **Do not overfill battery. Electrolyte will overflow onto other parts of the vehicle and severe corrosion and deterioration will result.**

7. Slide battery into battery base so battery terminals are toward the rear of the vehicle.

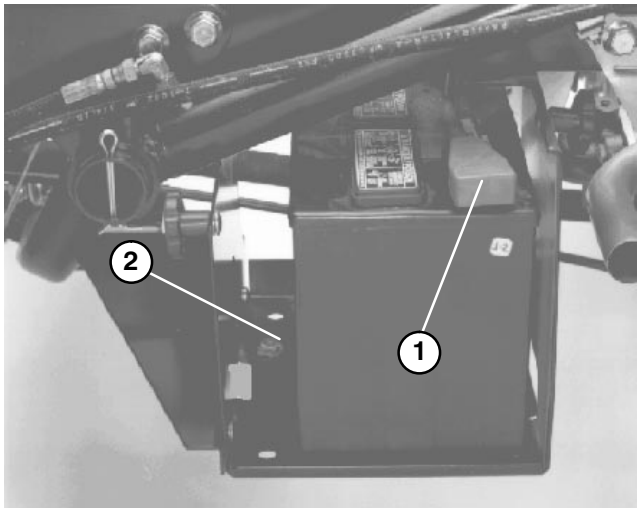

Figure 10

1. **Positive (+) cable**
2. **Hold down**

8. Install the positive cable (red) to the positive (+) terminal and the negative cable (black) to the negative (—) terminal of the battery and secure with capscrews and nuts. Slide the rubber boot over the positive terminal to prevent possible short–out from occurring.

WARNING

Connecting cables to the wrong post could result in personal injury and/or damage to the electrical system. Make sure battery or cables do not interfere or rub on any moving or hot parts.

9. Install battery hold down and secure to base with capscrew, washers and locknut.

10. Reinstall battery cover to battery base and tighten knobs.

CAUTION

Before servicing or making adjustments to the machine, stop engine, set parking brake and remove key from the switch. Any load material must be removed from bed or other attachment before working under raised bed. Always place safety support on extended lift cylinder, to hold up bed, before working under raised bed.

CHECK CRANKCASE OIL (Fig. 11)

The engine is shipped with approximately 2 quarts (w/ filter) of oil in the crankcase; however, level of oil must be checked before and after the engine is first started.

1. Position machine on a level surface.

2. Remove dipstick and wipe it with a clean rag. Insert dipstick into tube and make sure it is seated fully. Remove dipstick and check level of oil. If oil level is low, remove filler cap and add enough oil to raise level to FULL mark on dipstick.

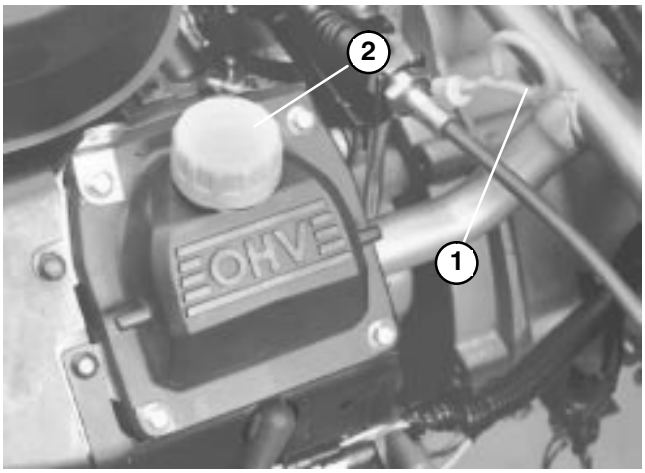

Figure 11

1. **Dipstick**
2. **Filler cap**

3. The engine uses any high-quality detergent oil having the American Petroleum Institute -API- "service classification" SF or SG. Oil viscosity — weight — is selected according to anticipated ambient temperature.

Temperature/ viscosity recommendations are:

A. Above 0° F (−20° C) — Use 10W−30 or 10W−40

B. Below 32° F (0° C) — Use SAE 5W−20 or 5W−30.

4. Pour oil into fill opening until the oil level is up to the "FULL" mark on the dipstick. Add the oil slowly and check the level often during this process. DO NOT OVERFILL.

IMPORTANT: Check level of oil every 8 operating hours or daily. Change oil and filter initially after the first 5 hours of operation, thereafter, change oil and filter every 50 hours. However, change oil more frequently when engine is operated in extremely dusty or dirty conditions.

5. Install the dipstick firmly in place.

FILL FUEL TANK (Fig. 12)

Fuel tank capacity is approximately 7 gallons.

THE TORO COMPANY STRONGLY RECOMMENDS THE USE OF FRESH, CLEAN, **UNLEADED** REGULAR GRADE GASOLINE IN TORO GASOLINE POWERED PRODUCTS. UNLEADED GASOLINE BURNS CLEANER, EXTENDS ENGINE LIFE, AND PROMOTES GOOD STARTING BY REDUCING THE BUILD−UP OF COMBUSTION CHAMBER DEPOSITS. LEADED GASOLINE CAN BE USED IF UNLEADED IS NOT AVAILABLE. MINIMUM OCTANE RATING OF 87.

NOTE: NEVER USE METHANOL, GASOLINE CONTAINING METHANOL, GASOLINE CONTAINING MORE THAN 10% ETHANOL, GASOLINE ADDITIVES, OR WHITE GAS BECAUSE ENGINE FUEL SYSTEM DAMAGE COULD RESULT.

1. Clean area around fuel tank cap.

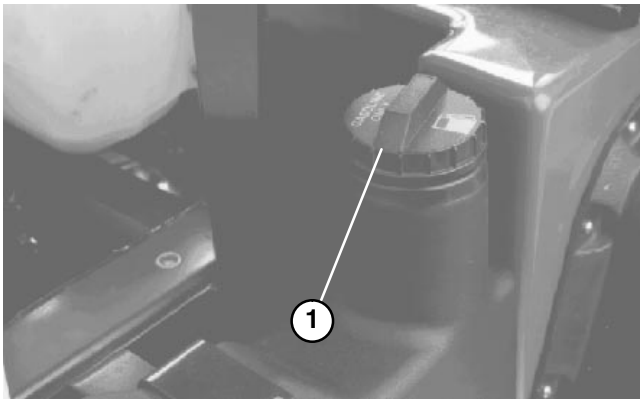

Figure 12

1. **Fuel tank cap**

2. Remove fuel tank cap.

3. Fill tank to about one inch below top of tank, (bottom of filler neck). **DO NOT OVERFILL.** Then install cap.

4. Wipe up any fuel that may have spilled to prevent a fire hazard.

DANGER

Because gasoline is flammable, caution must be used when storing or handling it. Do not fill fuel tank while engine is running, hot or when machine is in an enclosed area. Vapors may build up and be ignited by a spark or flame source many feet away. DO NOT SMOKE while filling the fuel tank to prevent the possibility of an explosion. Always fill fuel tank outside and wipe up any spilled gasoline before starting engine. Use a funnel or spout to prevent spilling gasoline, and fill tank no higher than one inch below top of tank, (bottom of filler neck). DO NOT OVER FILL. Store gasoline in a clean safety approved container and keep the cap on the container. Keep gasoline in a cool, well−ventilated place; never in an enclosed area such as a hot storage shed. To assure volatility, do not buy more than a 30 day supply of gasoline. Gasoline is a fuel for internal combustion engines; therefore do not use it for any other purpose. Since many children like the smell of gas, keep it out of their reach because the fumes are explosive and dangerous to inhale.

CHECK TRANSAXLE / HYDRAULIC FLUID (Fig. 13)

The transaxle reservoir is filled with Dexron III ATF. Check level before engine is first started and every 8 hours or daily, thereafter. Capacity of system is 7.5 qt.

1. Position the vehicle on a level surface.

2. Clean area around dipstick.

3. Unscrew dipstick from top of transaxle and wipe it with a clean rag.

4. Screw dipstick into transaxle and make sure it is seated fully. Unscrew dipstick and check fluid level. Fluid should be up to top of flat portion of dipstick. If level is low, add enough fluid to achieve the proper level.

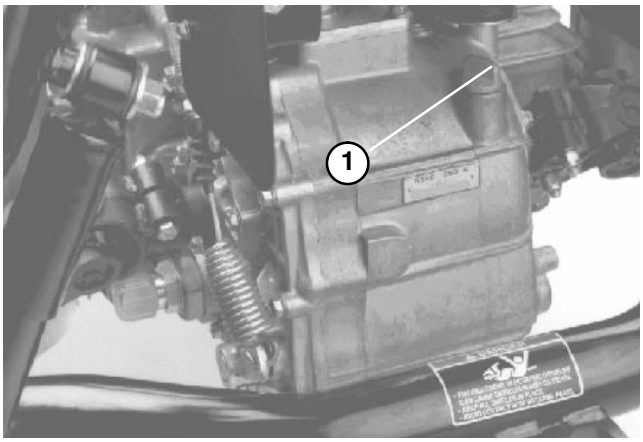

Figure 13
1. Dipstick

CHECK BRAKE FLUID (Fig. 14)

The brake fluid reservoir is shipped from the factory filled with “DOT 3” brake fluid. Check level before engine is first started and every 8 hours or daily, thereafter.

1. Park machine on a level surface.

2. Fluid level should be up to FULL line on reservoir.

3. If fluid level is low, clean area around cap, remove reservoir cap and fill to proper level. **DO NOT OVERFILL**.

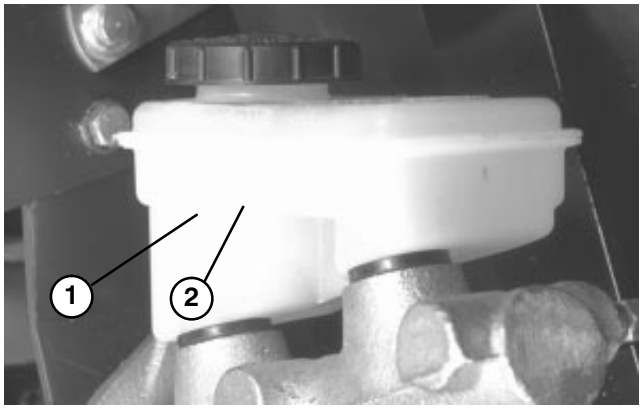

Figure 14
1. Brake fluid reservoir
2. Full line

CHECK TORQUE OF WHEEL NUTS

WARNING

Failure to maintain proper torque could result in failure or loss of wheel and may result in personal injury. Torque front and rear wheel nuts to 45-65 ft −lb after 1-4 hours of operation and again after 10 hours of operation and every 200 hours thereafter.

BEFORE OPERATING

CHECK TIRE PRESSURE

Check tire pressure every 8 hours or daily to assure proper levels.

Maximum air pressure in front and rear (23") tires is 20 psi.

Optional rear (24") tires is 18 psi maximum.

1. The air pressure needed is determined by the payload carried.

2. The lower the air pressure, the less the compaction and tire marks are minimized. Lower pressure should not be used for heavy payloads at high speeds. Tire damage may result.

3. Higher pressures should be used for heavier payloads at higher speeds. Do not exceed the maximum pressure. Use the following charts to determine correct tire pressures for tire size and payload of vehicle.

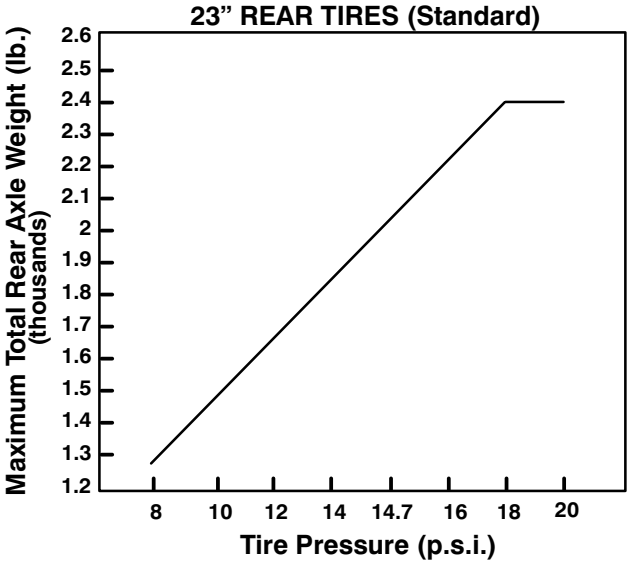

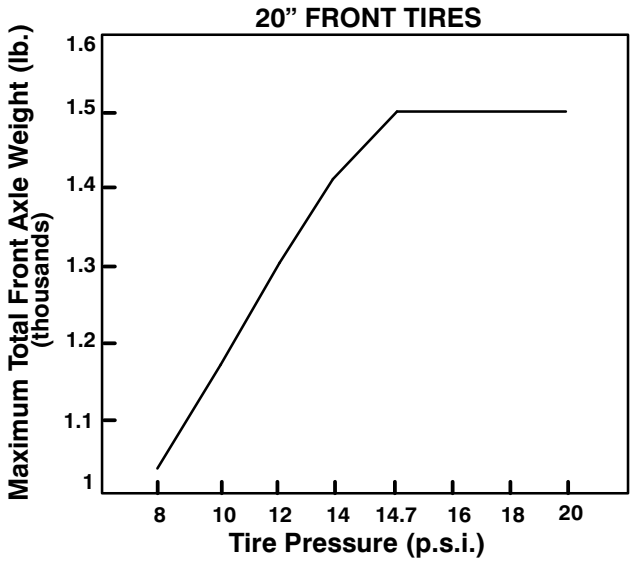

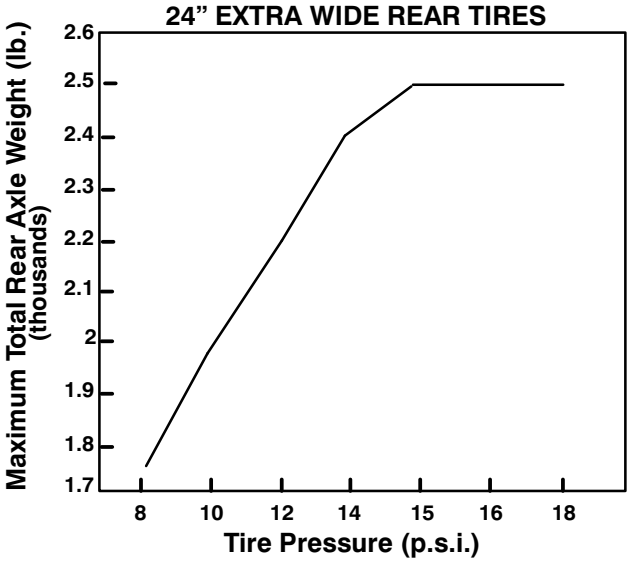

CONTROLS

Accelerator Pedal (Fig. 15) – The accelerator pedal gives the operator the ability to vary engine and ground speed of the vehicle, when the transmission is in gear. Depressing the pedal increases engine RPM and ground speed. Releasing pedal will decrease engine RPM and ground speed of the machine.

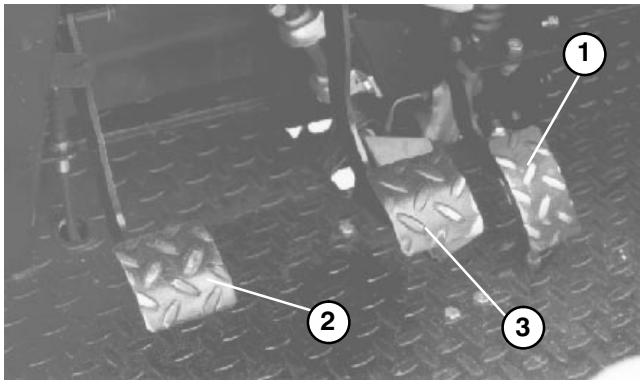

Figure 15

1. **Accelerator pedal**
2. **Clutch pedal**
3. **Brake pedal**

Clutch Pedal (Fig. 15) –The clutch pedal must be fully depressed to disengage clutch when starting engine or shifting transmission gears. Release pedal smoothly when transmission is in gear to prevent unnecessary wear on transmission and other related parts.

IMPORTANT: Do not ride clutch pedal during operation. Clutch pedal must be fully out or clutch will slip causing friction and wear. Never hold the vehicle stopped on a hill using the clutch pedal. Damage to the clutch may occur.

Brake Pedal (Fig. 15)) –The brake pedal is used to apply service brakes to stop or slow vehicle.

CAUTION

Worn or misadjusted brakes may result in personal injury. If brake pedal travels to within 1" of the vehicle floor board, the brakes must be adjusted or repaired.

Gear Shift Lever (Fig. 16) – Fully depress clutch pedal and move shift lever into desired gear selection. A diagram of the shift pattern is indicated below.

Shift Pattern

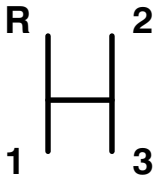

IMPORTANT: Do not shift the transaxle to the reverse or forward gear unless the vehicle is standing still. Damage to transaxle may occur.

CAUTION

Down shifting from too high a speed can cause the rear wheels to skid resulting in loss of vehicle control as well as clutch and/or transmission damage. Shift smoothly to avoid grinding gears.

Differential Lock (Fig. 16) – Allows rear axle to be locked for increased traction. Differential lock may be engaged with vehicle in motion. Move lever forward and to the right to engage lock.

Note: Vehicle motion plus a slight turn is required to engage or disengage differential lock.

WARNING

Turning with the differential lock on can result in loss of vehicle control. Do not operate with differential lock on when making sharp turns or at high speeds. Refer to using the differential lock, page 24.

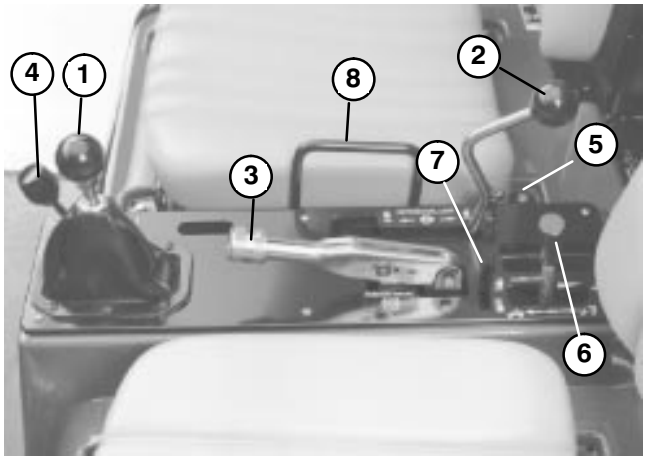

Figure 16

1. **Gear shift lever**
2. **Differential lock**
3. **Parking brake**
4. **High–low range shifter**
5. **Choke**
6. **Hydraulic lift**
7. **Hydraulic lift lock**
8. **Passenger hand hold**

Choke (Fig. 16) — To start a cold engine, close carburetor choke by pulling choke control upward to ON position. After engine starts, regulate choke to keep engine running smoothly. As soon as possible, open the choke by pushing it downward to the OFF position. A warm engine requires little or no choking.

CONTROLS

Parking Brake (Fig. 16) – Whenever the engine is shut off, the parking brake must be engaged to prevent accidental movement of the vehicle. To engage the parking brake, pull back on lever. To disengage, push lever forward. Make sure parking brake is released before moving vehicle. If vehicle is parked on a steep grade, make sure parking brake is applied. Also, shift the transmission into 1st gear on a uphill grade or reverse on a down hill grade. Place chocks at the down hill side of wheels.

Hydraulic Lift (Fig. 16) – Raises and lowers bed. Move rearward to raise, forward to lower.

IMPORTANT: When lowering bed, hold lever in forward position for 1 or 2 seconds after bed contacts frame to secure it in lowered position. Do not hold the hydraulic lift in either the raise or lower position, for more than 5 seconds, once the cylinders have reached the end of their travel. The hydraulic pump may over heat, resulting in pump damage.

Hydraulic Lift Lock (Fig. 16) – Locks lift lever so hydraulic cylinders do not operate when vehicle is not equipped with a bed.

Passenger Hand Hold (Fig. 16) – Left side of passenger seat.

High–Low Range Shifter (Fig. 16) – Adds three additional speeds for precise speed control.

A. Vehicle must be completely stopped before shifting between High and Low range.

B. Shift only on level ground.

C. Depress clutch pedal fully.

D. Move lever fully forward for High and fully rearward for Low.

HIGH is for higher speed driving on level, dry surfaces with light loads.

LOW is for low speed driving. Use this range when greater than normal power or control is required. For example, steep grades, difficult terrain, heavy loads, slow speed but high engine speed (spraying).

NOTE: There is a location between HIGH and LOW in which the transaxle is in neither range. This should not be used as a neutral position because the vehicle could move unexpectedly if the HIGH–LOW shifter is bumped and the gear shift lever is in gear.

Tilt Steering Lever (Fig. 17) – Lever on right side of console allows steering wheel to be adjusted for operator comfort.

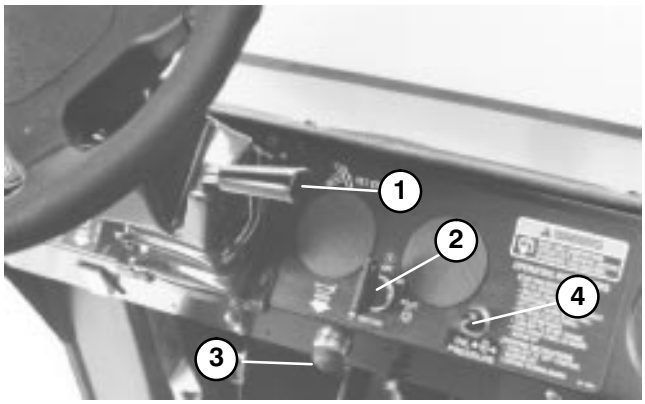

Figure 17

1. **Tilt steering lever**
2. **Ignition switch**
3. **Horn button**
4. **Oil pressure warning light**

Horn Button (Fig. 17) – Pressing button activates horn.

Ignition Switch (Fig. 17) – The ignition switch, used to start and stop the engine, has three positions: OFF, RUN and START. Rotate key clockwise — START position — to engage starter motor. Release key when engine starts. The key will move automatically to the ON position. To shut engine off, rotate key counterclockwise to OFF position.

Oil Pressure Warning Light (Fig. 17) – Light glows if engine oil pressure drops below a safe level. If light flickers or remains ON, stop vehicle, turn off engine and check oil level. If oil level was low, but adding oil does not cause light to go out when engine is restarted, turn engine off immediately and contact your local TORO distributor for assistance.

To check operation of warning lights:

1. Apply parking brake.

2. Turn ignition key to “ON”, but do not start engine. The oil pressure light should glow. If light does not function, either a bulb is burned out or there is a malfunction in the system which must be repaired.

NOTE: If engine was just turned off, it may take 1 to 2 minutes for light to come on.

Hour Meter (Fig. 18) – Indicates the total hours of machine operation. The hour meter starts to function whenever the key switch is rotated to “ON” position.

Light Switch (Fig.18) – Toggle switch to activate headlights. Push to turn lights “ON”.

Fuel Gauge (Fig.18) – Shows amount of fuel in tank. Operates only when ignition switch is in “ON” position.

3rd High Lockout Switch (Fig.18) – Moving switch to slow– – position and removing key will prevent use of third gear when in the High range. Engine will shut off if shift lever is moved to third gear when in High range. Key is installed with teeth pointing downward. Push key in to turn. Key is removable in either position.

CONTROLS

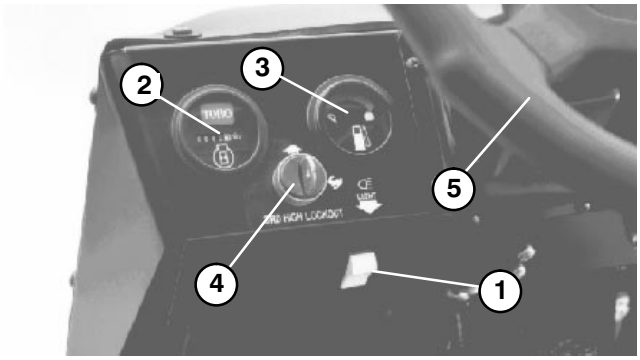

Figure 18

1. **Light switch**
2. **Hour meter**
3. **Fuel gauge**
4. **3rd High lockout switch**
5. **Steering wheel**

Steering Wheel (Fig. 18) – Turns vehicle. If engine stalls or power assist fails due to a malfunction, vehicle steering will require greater effort.

Tachometer (optional–not shown) – Indicates engine RPM. Gear selection graphics indicates speed.

Remote Hydraulic Lever (optional–not shown) – Controls hydraulic flow to optional quick rear couplers.

OPERATING INSTRUCTIONS

PRE–STARTING CHECKS

Safe operation begins before taking the vehicle out for a day's work. You should check these items each time:

1. Check tire pressure.

Note: These tires are different than car tires, they require less pressure to minimize turf compaction and damage.

2. Check all fluid levels and add the appropriate amount of Toro specified fluids, if any are found to be low.

3. Check brake pedal operation.

4. Check to see that the lights and horn are working.

5. Turn steering wheel to the left and right to check steering response.

6. Check for oil leaks, loose parts and any other noticeable malfunctions. Make sure engine is off and all moving parts have stopped before checking for oil leaks, loose parts and other malfunctions.

If any of the above items are not correct, notify your mechanic or check with your supervisor before taking the vehicle out for the day. Your supervisor may want you to check other items on a daily basis, so ask what your responsibilities are.

STARTING ENGINE

1. Sit on operator's seat and engage parking brake.

2. Disengage PTO's (if so equipped) and return hand throttle lever to OFF position (if so equipped).

3. Move shift lever to NEUTRAL position and depress clutch pedal.

4. Keep foot off accelerator pedal.

A. If engine is cold– depress and hold the accelerator pedal about half way down and pull choke knob up to ON position while cranking engine.

B. If engine is hot– depress and hold the accelerator pedal about half way down while cranking engine.

C. If engine is flooded – fully depress accelerator pedal and hold it to the floor until the engine starts. Never pump the accelerator pedal.

5. Insert key into ignition switch and rotate it clockwise to start the engine. Release key when engine starts. Regulate the choke to keep engine running smoothly.

IMPORTANT: To prevent overheating of the starter motor, do not engage starter longer than 10 seconds. After 10 seconds of continuous cranking, wait 60 seconds before engaging starter motor again.

DRIVING VEHICLE

1. Release parking brake.

2. Fully depress clutch pedal.

3. Move gear shift lever to 1st gear.

4. Release clutch pedal smoothly while depressing accelerator pedal.

5. When vehicle gains enough speed, remove foot from accelerator pedal, fully depress clutch pedal, move gear shift lever to next gear and release clutch pedal while depressing accelerator pedal. Repeat procedure until desired speed is attained. Stop vehicle before shifting to reverse and forward.

Note: Avoid long periods of engine idling.

Note: Leaving ignition switch in "ON" position for long periods of time without running engine will discharge battery.

IMPORTANT: Do not hold front wheels turned against the right or left stops for longer than 5 seconds. The hydraulic pump may over heat, resulting in pump or steering gear damage.

6. Do not attempt to push or tow vehicle to get it started. Damage to drive train could result.

STOPPING VEHICLE

1. To stop machine, remove foot from accelerator pedal, depress clutch pedal, then depress brake pedal.

STOPPING ENGINE

1. To stop engine, rotate ignition key to OFF and engage parking brake. Remove key from switch to prevent accidental starting.

NEW VEHICLE BREAK−IN

Your Workman 3100® is ready for work. To provide proper performance and long vehicle life, follow these guidelines for the first 100 operating hours.

- Check the fluid and engine oil levels regularly and be alert for indications of overheating in any component of the vehicle.
- After starting a cold engine, let it warm up for about 15 seconds before shifting into gear.
- Avoid racing the engine.
- Avoid situations requiring hard stops, especially when hauling heavy loads or pulling a trailer. It is necessary to fully break−in a new set of brake linings to achieve full braking performance. Follow this guideline whenever new linings are installed.
- Vary vehicle speeds during operation. Avoid excessive idling. Avoid fast starts and quick stops.
- A break−in oil for engine is not required. Original engine oil is the same type specified for regular oil changes.
- Refer to Maintenance section of Operator's Manual for any special low hour checks.

CHECK INTERLOCK SYSTEM

The purpose of the interlock system is to prevent the engine from cranking or starting unless the clutch pedal is depressed.

CAUTION

The interlock switches are for the operator's protection, so do not bypass them. Check operation of the switches daily to assure interlock system is operating. If a switch is malfunctioning replace it before operating. Regardless whether switches are operating properly or not, replace them every two years to assure maximum safety. Do not rely entirely on safety switches − use common sense!

To verify clutch interlock switch operation:

1. Sit on operator's seat and engage parking brake. Move shift lever to NEUTRAL position.

2. Without depressing clutch pedal, rotate key clockwise to start position.

3. If engine cranks or starts, there is a malfunction in the interlock system that must be repaired before operating vehicle.

Refer to Attachment Operator's Manual for procedure on checking attachment interlock system.

OPERATING CHARACTERISTICS

The vehicle is designed with safety in mind. It has four wheels for added stability. It uses familiar automotive style controls, including the steering wheel, brake pedal, clutch pedal, accelerator pedal, and gear shifter. It is important to remember, however, that this vehicle is not a passenger car. It is a work vehicle and not designed for use on roadways.

The vehicle has special tires, low gear ratios, a locking differential, and other features that give it extra traction. These features add to the versatility of the vehicle but, they can also get you into dangerous situations. You must keep in mind that the vehicle is not a recreation vehicle. It is not an all terrain vehicle. And, it is definitely not meant for "stunt driving" or "horsing around". It is a work vehicle, not a play vehicle. Children should not be allowed to operate the vehicle. Anyone who operates the vehicle should have a motor vehicle license.

OPERATING INSTRUCTIONS

If you are not experienced at driving the vehicle, practice driving it in a safe area away from other people. Be sure you are familiar with all the vehicle's controls, particularly those used for braking, steering and transmission shifting. Learn how your vehicle handles on different surfaces. Your operating skills will improve with experience, but as in operating any vehicle, take it easy as you begin. Be sure you know how to stop quickly in an emergency. If you need help, ask your supervisor for assistance.

Many factors contribute to accidents. You have control over several of the most important. Your actions, such as driving too fast for conditions, braking too fast, turning too sharp, and combinations of these, are frequent cause of accidents.

One of the major causes of accidents is fatigue. Be sure to take occasional breaks. It is very important that you stay alert at all times.

Never operate the vehicle, or any equipment, if you are under the influence of alcohol or other drugs. Even prescription drugs and cold medicines can cause drowsiness. Read the label on the medicine or check with your doctor or pharmacist if you are unsure about a certain medication.

One of the most important rules to follow is to go slower in unfamiliar areas. It is surprising how much damage and injury common things can cause. Tree branches, fences, wires, other vehicles, tree stumps, ditches, sand traps, streams, and other things found in most parks and golf courses can be hazardous to the operator and passenger.

Avoid driving when it is dark, especially in unfamiliar areas. If you must drive when it is dark, be sure to drive cautiously, use the head lights, and even consider adding additional lights.

PASSENGERS

Whenever you have a passenger riding in the vehicle make sure he or she is holding on securely. Drive slower and turn less sharply because your passenger does not know what you are going to do next and may not be prepared for turning, stopping, accelerating, and bumps.

You and your passenger should remain seated at all times, keeping arms and legs inside the vehicle. The operator should keep both hands on steering wheel, whenever possible and passenger should use hand holds provided.

There should never be passengers in the dump box or on any attachments. The vehicle is meant to have one driver and only one passenger—no more.

SPEED

Speed is one of the most important variables leading to accidents. Driving too fast for the conditions can cause you to lose control and have an accident. Speed can also make a minor accident worse. Driving head—on into a tree at slow speed can cause injury and damage, but, driving into a tree at high speed can destroy the vehicle and kill you and your passenger.

Never drive too fast for the conditions. If there is any doubt about how fast to drive, slow down.

When using heavy attachments (more than 1000 pounds), such as sprayers, top dressers, or spreaders, etc., operating speeds should be restricted by moving 3rd high lockout switch to slow— — position.

TURNING

Turning is another important variable leading to accidents. Turning too sharply for the conditions can cause the vehicle to lose traction and skid, or even tip over.

Wet, sandy and slippery surfaces make turning more difficult and risky. The faster you are going, the worse this situation becomes so, slow down before turning.

During a sharp turn at higher speeds, the inside rear wheel may lift off of the ground. This is not a flaw in the design, it happens with most four wheel vehicles including passenger cars. If this happens, you are turning too sharply for the speed at which you are traveling. Slow down!

BRAKING

It is good practice to slow down before you get near an obstacle. This gives you extra time to stop or turn away. Hitting an obstacle can damage the vehicle and its contents. More important, it can injure you and your passenger.

Gross vehicle weight has a major impact on your ability to stop and/or turn. Heavier loads and heavier attachments make a vehicle harder to stop or turn. The heavier the load, the longer it takes to stop.

The braking characteristics also change with no bed or attachment on the vehicle. Fast stops may cause the rear wheels to lock up before the front wheels lock up, which may affect the control of the vehicle. It is a good idea to decrease vehicle speed with no bed or attachment.

Turf and pavement are much slipperier when they are wet. It can take 2 to 4 times as long to stop on wet surfaces as on dry surfaces.

If you drive through standing water deep enough to get the brakes wet, they will not work well until they are dry. After driving through water, you should test the brakes to make sure they work properly. If they do not, drive slowly in first gear while putting light pressure on the brake pedal. This will dry the brakes out.

OPERATING INSTRUCTIONS

Do not downshift for braking on icy or slippery surfaces (wet grass) or while going down a hill because engine braking may cause skidding and loss of control. Shift to a lower gear before starting down a hill.

TIPOVERS

The TORO WORKMAN® is equipped with a roll bar, hip restraints, shoulder restraints and hand hold. The ROPS system used on the vehicle will reduce the risk of serious or fatal injury in the unlikely event of a tipover, although the system cannot protect the operator from all possible injuries.



TIPOVER CAN OCCUR IF TRUCK IS IMPROPERLY OPERATED. INJURY OR DEATH COULD RESULT

IN CASE OF TIPOVER

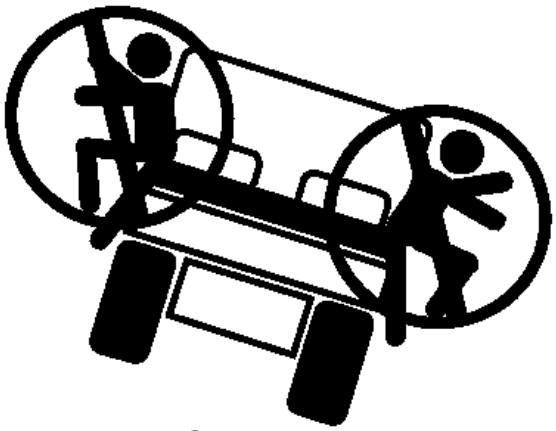

DON'T JUMP

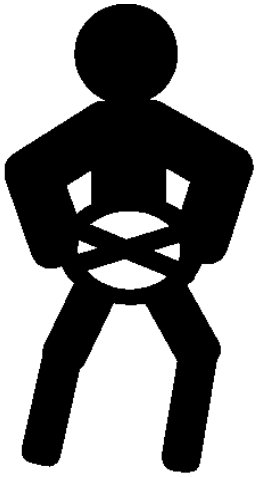

OPERATOR HOLD TIGHT AND BRACE FEET

Replace a damaged ROPS, do not repair or revise. Any alteration of ROPS must be approved by manufacturer.

The best way to prevent accidents involving utility vehicles is through continuous supervision and training of operators and paying constant attention to the area in which vehicle is being operated.

The best way for operators to prevent serious injury or death to themselves or others, is to familiarize themselves with the proper operation of the utility vehicle, to stay alert and to avoid actions or conditions which could result in a accident. In the event of a tip over, the risk of serious injury or death will be reduced if the operator is using the ROPS system and follows the instructions provided.



PASSENGER HOLD HIP RESTRAINT AND HAND HOLD, BRACE FEET



HILLS

WARNING

Tipping or rolling the vehicle on a hill will cause serious personal injury.

- **If engine stalls or you lose headway on a hill, never attempt to turn vehicle around.**
- **Always back straight down a hill in reverse gear.**
- **Never back down in neutral or with the clutch depressed, using only the brakes.**
- **Never drive across a steep hill, always drive straight up or down.**
- **Avoid turning on a hill**
- **Don't "drop the clutch" or slam on the brakes. Sudden speed change can initiate tipover.**

Use extra care when on hills. Never go on hills that are extremely steep. Stopping while going down a hill will take longer than on level ground. Turning while going up or down a hill is more dangerous than turning on the level. Turns while going down hill, especially with the brakes on, and, turning up hill while traversing a hill are particularly dangerous. Even at a slow speed and without a load, tip overs are more likely if you turn on a hill.

Slow down and shift into a lower gear before starting up or down a hill. If you have to turn while on a hill, do it as slowly and cautiously as possible. Never make sharp or fast turns on a hill.

If you stall or begin to lose headway while climbing a steep hill, quickly apply the brakes, shift to neutral, restart the engine and shift to reverse. At idle speed, engine and transaxle drag will aid the brakes in controlling the vehicle on the hill and help you back down the hill more safely.

Reduce the weight of the load if it is a steep hill or if the load has high center of gravity. Remember, loads can shift. Secure them.

Note: The Workman 3100® has excellent hill climbing ability. The differential lock will increase this ability. Hill climbing traction can also be increased by adding weight to the rear of the vehicle in one of the following ways:

- Adding weight to inside of box, making sure it is secured.
- Mounting wheel weights to rear wheels.
- Adding liquid ballast (calcium chloride) to rear tires.
- Traction will increase with no passenger in front seat.

LOADING AND DUMPING

The weight and position of the cargo and passenger can change the vehicle center of gravity and vehicle handling. To avoid loss of control resulting in personal injury, follow these guidelines.

Do not carry loads which exceed the load limits described on the vehicle weight label.

WARNING

The bed will lower whenever the dump lever is pushed down, even when the engine is off. Turning off the engine will NOT prevent the box from lowering. Always place the safety support on extended lift cylinder to hold box up if you are not going to lower it right away.

WARNING

When lowering the box it is possible for you or others to get their hands or other body parts in the wrong spot and have them crushed. Take extra care that no one will get hurt. Also, do not dump on anyone's feet. It may seem funny but, it can be dangerous.

OPERATING INSTRUCTIONS

The vehicle has several combinations of boxes, platforms, and attachments available. These can be used in various combinations that allow for maximum capacity and versatility. The full sized box is 55 inches wide by 65 inches long and can hold up to 2000 pounds of evenly distributed cargo.

WARNING

When raising or lowering bed or implement hydraulic oil will bypass over a relief valve when cylinder reach the end of their travel, stopping power assist to steering gear and increasing steering effort. Release lift levers to NEUTRAL after bed or implement is raised or lowered, to regain assist to power steering.

Loads vary in how they are distributed. Sand spreads out evenly and quite low. Other items, such as bricks, fertilizer or landscape timbers, stack higher in the box.

The height and weight of the load has a significant influence on tip overs. The higher a load is stacked, the more likely the vehicle is to tip over. You may find that 2000 pounds stacks too high for safe operation. Reducing the total weight is one way to reduce the risk of a tip over. Distributing the load as low as possible is another way to reduce the risk of a tip over.

If the load is positioned toward one of the sides, it will make the vehicle much more likely to tip over on that side. This is especially true when turning if the load is on the outside of the turn.

Never position heavy loads behind the rear axle. If the load is positioned so far to the rear that it is behind the rear axle, it will reduce the weight on the front wheels and this will reduce steering traction. With the load all the way to the back, the front wheels can even come off of the ground when going over bumps or up a hill. This will result in a loss of steering and may lead to the vehicle tipping over.

As a general rule, position the weight of the load evenly from front to rear and evenly from side to side.

If a load is not secured, or you are transporting a liquid in a large container such as a sprayer, it can shift. This shifting happens most often while turning, going up or down hills, suddenly changing speeds or while driving over rough surfaces. Shifting loads can lead to tip overs. Always secure loads so that they do not shift. Never dump the load while the vehicle is sideways on the hill.

Heavy loads increase stopping distance and reduce your ability to turn quickly without tipping over.

The rear cargo space is intended for load carrying purposes only, not for passengers.

USING THE DIFFERENTIAL LOCK

The differential lock increases the vehicle's traction by locking the rear wheels so one wheel will not spin out. This can help when you have heavy loads to haul on wet turf or slippery areas, going up hills and on sandy surfaces. It is important to remember however, that this extra traction is only for temporary limited use. Its use does not replace the safe operation, already discussed concerning steep hills and heavy loads.

The differential lock causes the rear wheels to spin at the same speed. When using differential lock your ability to make sharp turns is somewhat restricted and may scuff the turf. Use the differential lock only when needed, at slower speeds and only in first or second gear.

WARNING

Tipping or rolling the vehicle on a hill will cause serious injury.

- **The extra traction available with the differential lock can be enough to get you into dangerous situations such as climbing slopes that are too steep to turn around. Be extra careful when operating with the differential lock on, especially on steeper slopes.**
- **If the differential lock is on when making a sharp turn at a higher speed and inside rear wheel lifts off the ground, there may be a loss of control which could cause vehicle to skid (Refer to section on Differential Lock Operation). Use the differential lock only at slower speeds.**

TRANSPORTING VEHICLE

For moving the vehicle long distances, a trailer should be used. Make sure the vehicle is secured to the trailer. Refer to Figures 19 and 20 for location of tie down points.

TOWING VEHICLE

In case of emergency, the vehicle can be towed for a short distance. However, Toro does not recommend this as a standard procedure.

WARNING

Towing at excessive speeds could cause vehicle to lose steering control. Never tow vehicle faster than 5 MPH.

OPERATING INSTRUCTIONS

Towing the vehicle is a two person job. Affix a tow line to holes in front frame member. Move shifter to Neutral and release parking brake. If machine must be moved a considerable distance, transport it on a truck or trailer.

Note: The power steering will not function, making it difficult (increase effort) to steer.

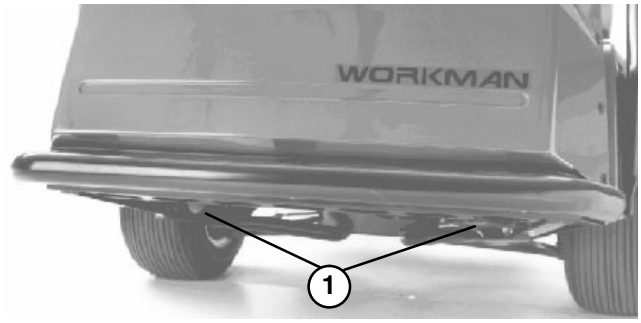

Figure 19

1. **Eye holes in frame**

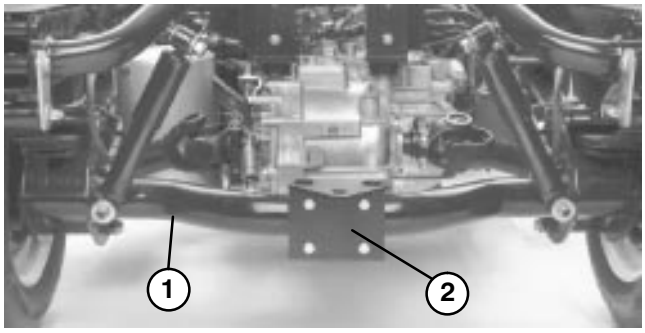

Figure 20

1. **Axle tube**
2. **Hitch plate**

TRAILER TOWING

The Workman 3100® is capable of pulling trailers and attachments of greater weight than the vehicle itself.

Several types of tow hitches are available for the Workman, depending on your application. Contact your Authorized TORO Distributor for details.

When equipped with a tow hitch bolted onto rear axle tube, your Workman can tow trailers or attachments with a Gross Trailer Weight (GTW) up to 1500 lbs. Always load a trailer with 60% of the cargo weight in the front of the trailer. This places approximately 10% (200 lbs. max.) of the Gross Trailer Weight (GTW) on the tow hitch of the vehicle.

When towing either standard tongue or 5th wheel trailers having a Gross Trailer Weight (GTW) in excess of 1500 lbs., use either a chassis mounted draw bar hitch (rated for 3500 lb. GTW) or 5th wheel kit with brakes. Trailer brakes are required whenever a trailer over 1500 lbs. GTW is towed behind a Workman vehicle.

When hauling cargo or towing a trailer (attachment), do not overload your vehicle or trailer. Overloading can cause poor performance or damage to the brakes, axle, engine, transaxle, steering, suspension, body structure or tires.

Important: To reduce potential for drive line damage, use low range.

When towing 5th wheel attachments, like a fairway aerator, always install the ”wheely bar”(included with the 5th wheel kit) to prevent the front wheels from lifting off the ground if the towed attachments movement is suddenly impaired.

MAINTENANCE CHART AND CHECKLIST

Daily Maintenance: (duplicate this page for routine use)
Check proper section of Operator's Manual for fluid specifications

Maintenance Check Item ➧	**Daily Maintenance Check For Week Of _____**						
	MON	TUES	WED	THURS	FRI	SAT	SUN
✓ Safety Interlock Operation							
✓ Service & Park Brake Operation							
✓ Clutch & Shifter Operation							
✓ Fuel Level							
✓ Engine Oil Level							
✓ Transaxle Oil Level							
✓ Brake Fluid Level							
✓ Air Filter Prefilter							
Inspect Engine Cooling Fins							
✓ Unusual Engine Noises							
✓ Unusual Operating Noises							
✓ Tire Pressure							
✓ Hydraulic Hoses for Damage							
✓ Fluid Leaks							
✓ Instrument Operation							
✓ Accelerator Operation							
Lubricate All Grease Fittings[1]							
Touch–up Damaged Paint							

[1] = Immediately after every washing, regardless of the interval listed.

Notation for areas of concern: Inspection performed by_____

Item	Date	Information
1		
2		
3		
4		
5		
6		
7		
8		

SERVICE INTERVAL CHART

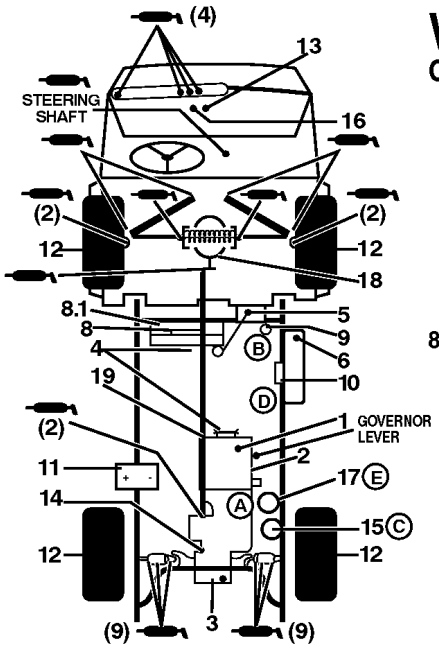

WORKMAN 4300-D QUICK REFERENCE AID

CHECK/SERVICE

1. ENGINE OIL LEVEL
2. ENGINE OIL DRAIN
3. TRANSAXLE/HYDRAULIC OIL LEVEL (DIP STICK)
4. BELTS (GOVERNOR, WATER PUMP, HYDRAULIC PUMP)
5. COOLANT LEVEL FILL
6. FUEL (DIESEL FUEL ONLY)
7. GREASE POINTS (37) — 100 HRS.
8. RADIATOR SCREEN

8.1. RADIATOR CLEANOUT DOOR

9. AIR CLEANER
10. FUEL PUMP
11. BATTERY
12. TIRE PRESSURE - MAXIMUM 20 PSI FRONT, 18 PSI REAR (24" TIRE)
13. FUSES (LIGHTS 10 AMP, IGNITION 7.5 AMP, DASH ACCESSORIES 7.5 AMP)
14. HYDRAULIC STRAINER
15. HYDRAULIC OIL FILTER
16. BRAKE FLUID
17. WATER SEPARATOR
18. DIFFERENTIAL FILL/CHECK
19. 4WD SHAFT

FLUID SPECIFICATIONS/CHANGE INTERVALS

SEE OPERATOR'S MANUAL FOR INITIAL CHANGES	FLUID TYPE	CAPACITY		CHANGE INTERVALS		FILTER PART NO.
		L	QT	FLUID	FILTER	
ENGINE OIL	SAE 10W-30 CD	3.7	3.9	100 HRS.	100 HRS.	67-4330 (A)
TRANS/HYDRAULIC OIL	DEXRON III ATF	7.1	7.5	800 HRS.	800 HRS.	54-0110 (C)
AIR CLEANER	CLEAN EVERY 50 HRS.				200 HRS.	33-1300 (B)
FUEL > 32° F	NO. 2-D	26.5	7 GAL	—	400 HRS.	63-8300 (E) WATER SEPARATOR
FUEL PUMP	—	—	—	—	400 HRS.	43-2550 (D)
COOLANT 50/50 ETHYLENE GLYCOL WATER	—	4.3	4.5	1200 HRS.	—	—
STRAINER	—	—		CLEAN 800 HRS.		87-3990
DIFFERENTIAL OIL	SAE 10W-30 CD	.95	1	800 HRS.	—	—

FOR HEAVY DUTY OPERATION, MAINTENANCE SHOULD BE PERFORMED TWICE AS FREQUENTLY.

87-9110

LUBRICATION

CAUTION

Before servicing or making adjustments to the machine, stop engine, set parking brake and remove key from the switch. Any load material must be removed from bed or other attachment before working under raised bed. Always place safety support on extended lift cylinder, to hold up bed, before working under raised bed.

GREASING BEARINGS AND BUSHINGS

(Fig. 21 – 24)

The vehicle has (33) grease fittings that must be lubricated regularly with No. 2 General Purpose Lithium Base Grease. If machine is operated under normal conditions, lubricate all bearings and bushings after every 100 hours of operation. More frequent lubrication is required if used for heavy duty vehicle operations.

The grease fitting locations and quantities are: Tie rod ends (4) (Fig. 21), Front ball joints (4) (Fig. 21), Rear drive shafts (18) (Fig. 23), Steering shaft (1) (Fig. 24), Front pivot bushings (2) (Fig. 22) and Pedal pivots (4) (Fig. 25).

IMPORTANT: When greasing drive shaft universal shaft bearing crosses, pump grease until it comes out of all 4 cups at each cross.

1. Wipe grease fitting clean so foreign matter cannot be forced into the bearing or bushing.
2. Pump grease into the bearing or bushing.
3. Wipe off excess grease.

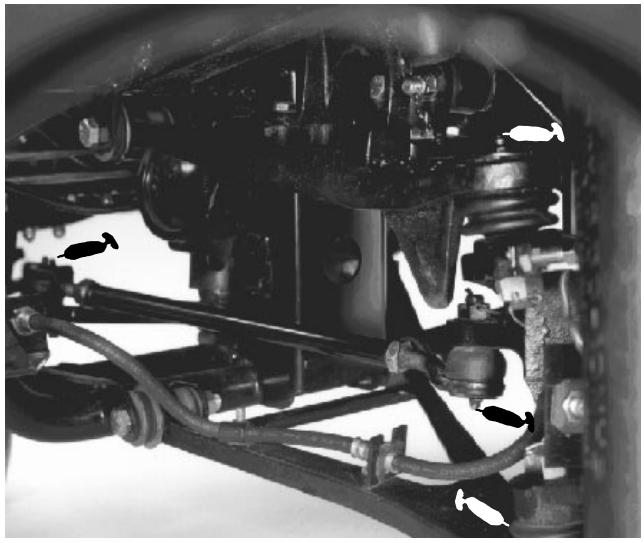

Figure 21

LUBRICATION



Figure 22

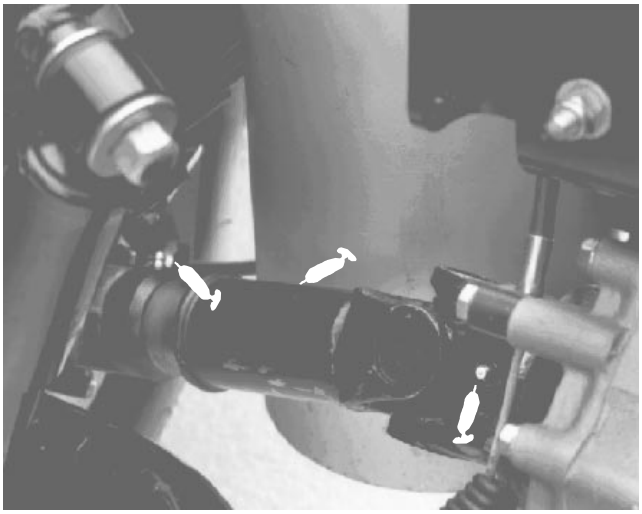

Figure 23



Figure 24

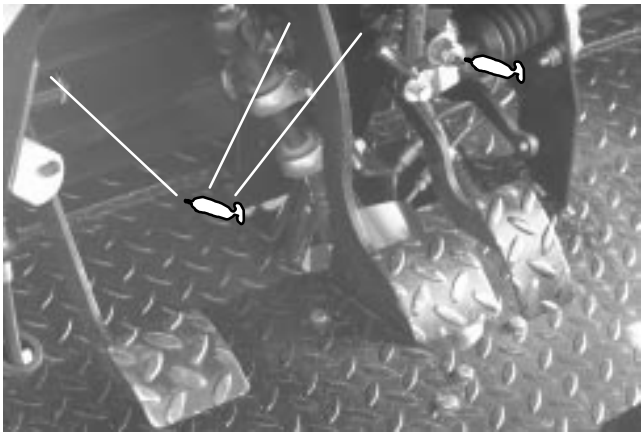

Figure 25

IMPORTANT

Heavy Duty Operation

If vehicle is subjected to conditions listed below, maintenance should be performed twice as frequently.

- **Desert operation**
- **Cold climate operation (below 32°F)**
- **Trailer or 5th wheel towing**
- **Frequent operation on dusty roads**
- **Frequent operation under maximum vehicle gross weight**
- **Construction work**
- **After extended operation in mud, sand, water or similar dirty conditions, have your brakes inspected and cleaned and drive axle joints greased as soon as possible. This will prevent any abrasive material from causing excessive wear.**
- **Under frequent heavy duty operating conditions, lubricate all grease fittings and inspect air cleaner daily to prevent excessive wear.**

MAINTENANCE

CAUTION

Only qualified and authorized personnel shall be permitted to maintain, repair, adjust or inspect the vehicle.

Avoid fire hazards and have fire protection equipment present in the work area. Do not use an open flame to check level or leakage of fuel, battery electrolyte or coolant. Do not use open pans of fuel or flammable cleaning fluids for cleaning parts.

Many of the subjects covered in this maintenance section require raising and lowering the bed. The following precautions must be taken or serious injury or death could result.

WARNING

Before servicing or making adjustments to the machine, stop engine, set parking brake and remove key from ignition switch. Any load material must be removed from bed or other attachment before working under raised bed. Never work under a raised bed without positioning safety support on a fully installed cylinder rod.

After maintenance is completed, remove safety support, slide it onto storage stud and lower bed.

USING BED SAFETY SUPPORT (Fig. 26 & 27)

1. Raise bed until lift cylinders are fully extended.

2. Remove bed support from storage stud on top of back rest support channel on Workman (Fig. 26).

3. Push bed support onto cylinder rod, making sure support end tabs rest on end of cylinder barrel and on cylinder rod end (Fig. 27).

4. To store bed support, remove bed support from cylinder and insert on stud on top of back rest support channel.

5. Always install or remove bed support from outside of bed.

6. Do not try to lower bed with bed safety support on cylinder.

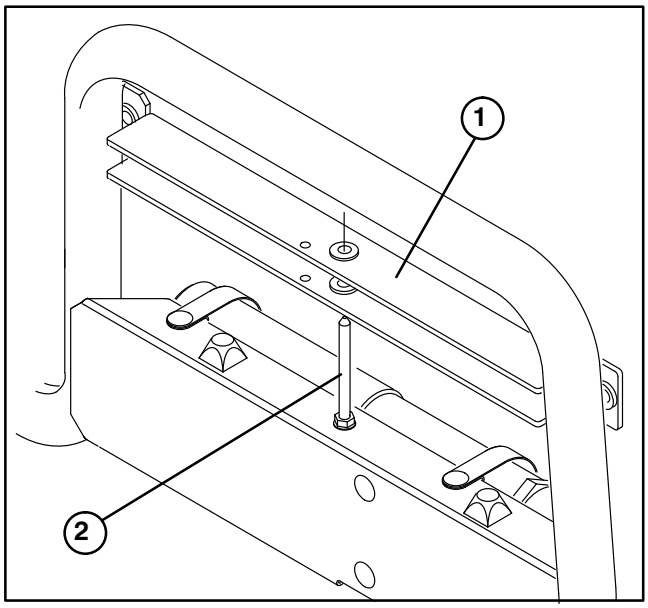

Figure 26
1. Bed support
2. Storage stud

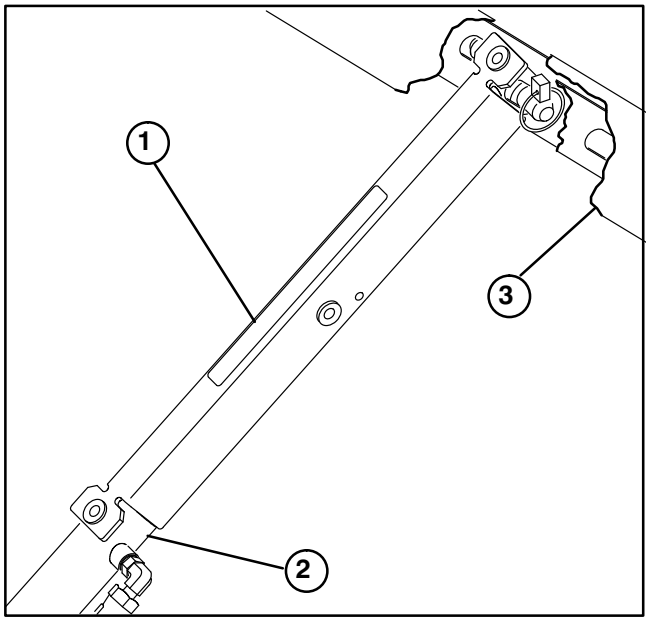

Figure 27
1. Bed support
2. Cylinder barrel
3. Bed

JACKING VEHICLE (Fig. 28 & 29)

1. Do not start engine while vehicle is on jack, because engine vibration or wheel movement could cause vehicle to slip off jack.

2. Do not work under vehicle without jack stands supporting it. The vehicle could slip off jack, injuring any one beneath it.

3. The jacking point at the front of the vehicle is under the front center frame support and at the rear it is under the axle tube.

4. When jacking up front of vehicle, always place a 2x4 block (or similar material) between jack and vehicle frame.

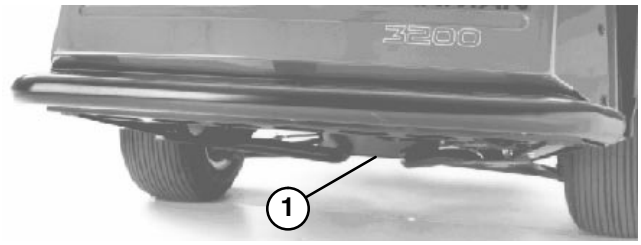

Figure 28
1. Front jacking point

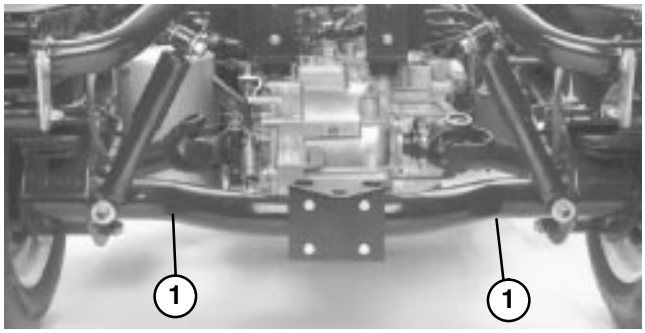

Figure 29
1. Rear jacking points

SERVICING AIR CLEANER (Fig. 30 & 31)

The foam pre−cleaner must be cleaned and re−oiled after every 25 hours engine operation if engine is operated in clean air conditions. However, air cleaner must be cleaned every few hours if operating conditions are extremely dusty or sandy.

1 Remove wing nut and cover.

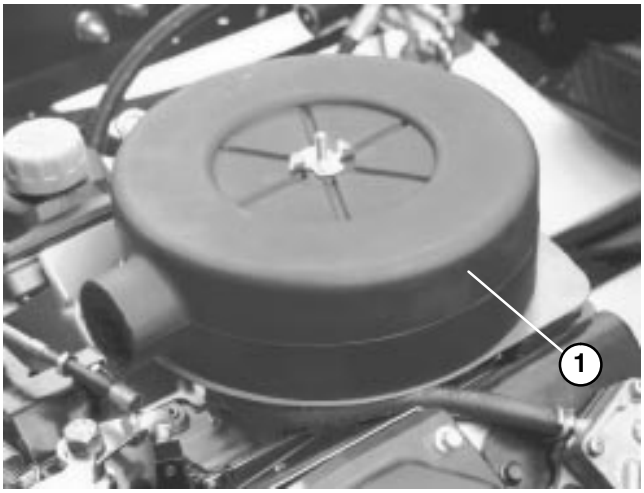

Figure 30
1. Air cleaner cover

2 Remove foam pre−cleaner by sliding it off the paper element.

A. Wash foam pre−cleaner in detergent and warm water.

B. Wrap foam pre−cleaner in cloth and squeeze dry. Do not wring precleaner. Allow to air dry.

C. Saturate foam pre−cleaner in engine oil. Squeeze to remove excess oil.

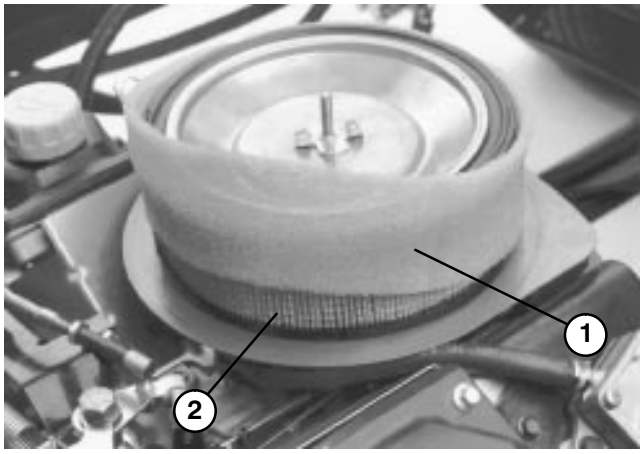

Figure 31
1. Pre−cleaner
2. Paper element

3 Reinstall on paper cartridge.

Inspect paper element every 25 hours of operation and replace if dirty or damaged. Change paper element every 200 hours. Do not wash paper element or do not clean with compressed air as damage will occur.

Note: With air cleaner disassembled, check air cleaner components for damage. Replace if necessary. Make sure rubber breather tube in base plate is securely in place or severe engine damage may occur.

4 Reinstall element with pre−cleaner, element cover sealing tube, air cleaner element cover, wing nut, second sealing tube, air cleaner cover and wing nut.

5 Tighten wing nut 1/2 to 1 turn after nut contacts cover. Do not overtighten.

CHANGING ENGINE OIL AND FILTER (Fig. 32)

Change oil and filter initially after the first 5 hours of operation, thereafter, change oil and filter every 50 hours.

1. Raise bed (if so equipped) and place safety support on extended lift cylinder to hold up bed.

2. Remove drain plug and let oil flow into drain pan. When oil stops, install drain plug.

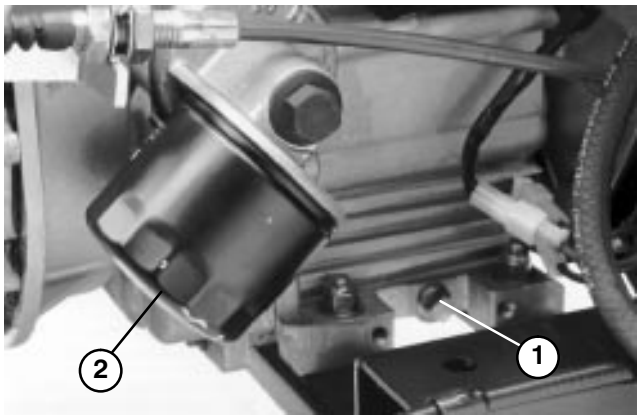

Figure 32
1. **Engine oil drain plug**
2. **Engine oil filter**

3. Remove oil filter. Apply a light coat of clean oil to the new filter seal before screwing it on. Screw filter on until gasket contacts mounting plate, then tighten filter and additional 1/2 turn. DO NOT OVER−TIGHTEN.

4. Add oil to crankcase, refer to Check Engine Oil.

FUEL SYSTEM (Fig. 33)

Fuel Lines and Connections

Check lines and connections every 400 hours or yearly, whichever comes first. Inspect for deterioration, damage, or loose connections.

Fuel Filter

Replace filter canister after every 600 hours of operation.

1. Raise bed (if so equipped) and place safety support on extended lift cylinder to hold up bed.

2. Place a clean container under fuel filter.

3. Loosen R−clamp securing filter to frame.

4. Remove clamps securing fuel filter to fuel lines.

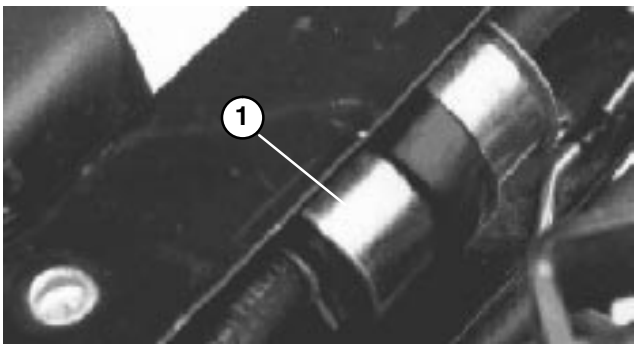

Figure 33
1. **Fuel Filter**

5. Install new fuel filter to fuel lines with clamps previously removed. Filter to be mounted so arrow points toward carburetor.

REMOVING DEBRIS FROM ENGINE

To ensure proper cooling, make sure the grass screen, cooling fins and other external surfaces of the engine are kept clean at all times.

Every 100 hours of operation (more often under extremely dusty, dirty conditions) remove the blower housing and other cooling shrouds and clean the cooling fins and external surfaces as necessary. Make sure cooling shrouds are reinstalled.

NOTE: Operating the engine with a blocked grass screen, dirty or plugged cooling fins or cooling shrouds removed, will cause engine damage due to overheating.

ADJUSTING BELT (Fig. 34)

Check condition and tension of pump drive belt after first day of operation and every 200 operating hours thereafter. Raise bed (if so equipped) and position safety support on extended lift cylinder to hold up bed.

1. Check tension by depressing belt at mid span of crankshaft and pump pulleys with 22 lbs. of force. A new belt should deflect .48−.58 in. A used belt should deflect .55−.65 in. If deflection is incorrect, proceed to next step. If correct, continue operation.

2. To adjust belt tension:

A. Loosen nuts securing hydraulic pump to engine frame.

B. Rotate pump until desired belt tension is attained. Tighten nuts.

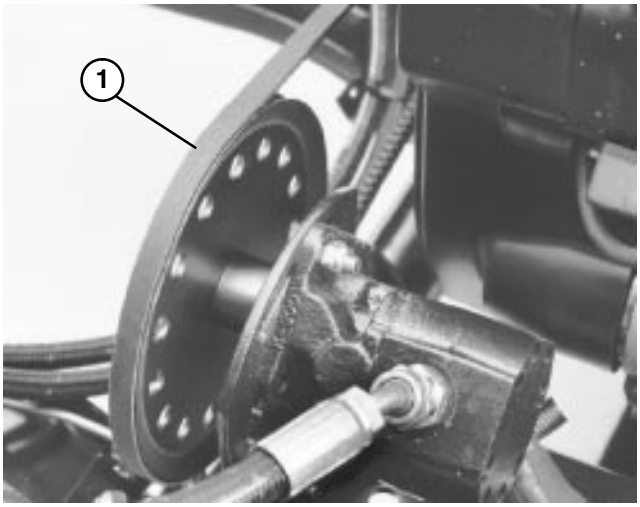

Figure 34
1. **Pump belt**

MAINTENANCE

ADJUSTING CARBURETOR (Fig. 35)

IMPORTANT: Make sure engine has warmed up, choke is operating correctly, fuel tank is full, fuel tank cap vent is not blocked, fuel filter is clean and air cleaner element is clean and all components are fastened securely before adjusting the carburetor.

1. Raise bed (if so equipped) and place safety support on extended lift cylinder to hold up bed. Stop engine and engage parking brake.

2. Low Idle Mixture Adjusting Needle — Close adjusting needle by gently rotating it clockwise.

IMPORTANT: Do not close the screw too tightly because the screw will likely be damaged.

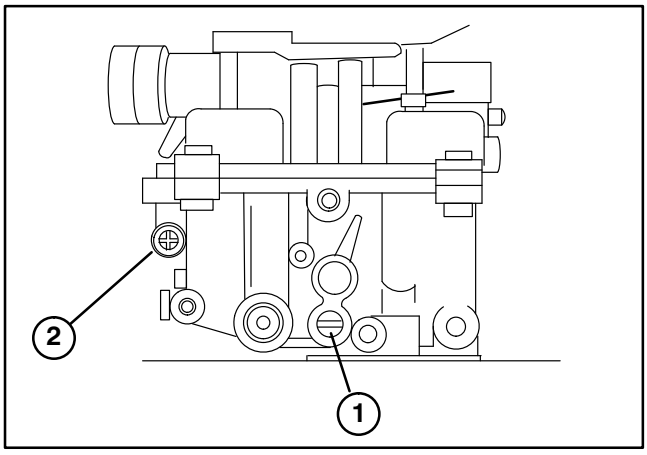

Figure 35

1. **Low idle mixture adjusting needle**
2. **Low idle speed adjusting screw**

3. Rotate−open the adjusting needle− 1−5/8 turns counterclockwise.

WARNING

Engine must be running so final adjustment of the carburetor can be performed. To guard against possible personal injury, keep hands, feet, face and other parts of the body away from muffler, engine and other moving or rotating parts.

4. Start engine and let it run for 5−10 minutes. Engine must be warm before making final adjustments. Check to make sure throttle and choke plates open fully.

5. With engine idling, turn low idle speed adjusting screw in or out to obtain a low idle speed of 1200 ± 100 rpm. Check speed with a tachometer.

6. Turn the low idle mixture adjusting needle in (slowly) until engine speed decreases and then back it out approximately 3/4 to 1 turn to obtain the best low speed performance.

7. Recheck idle speed using a tachometer and readjust if necessary.

ADJUSTING CHOKE

1. Raise bed (if so equipped) and place safety support on extended lift cylinder to hold up bed. Stop engine and engage parking brake.

2. Loosen cable clamp screw securing cable to engine.

3. Push choke knob down to OFF position.

4. Push choke cable firmly toward operators side of vehicle and tighten cable clamp screw.

REPLACING SPARK PLUGS (Fig. 36)

Replace spark plugs after every 800 operating hours to assure proper engine performance and reduce exhaust emission level.

Correct spark plug to use is a Champion RC 12YC or equivalent.

Recommended air gap is .040".

Note: The spark plug usually lasts a long time; however, the plug should be removed and checked whenever the engine malfunctions.

1. Clean area around spark plugs so foreign matter cannot fall into cylinder when spark plug is removed.

2. Pull spark plug wires off spark plugs and remove plugs from cylinder head.

3. Check condition of side electrode, center electrode, and center electrode insulator to assure there is no damage.

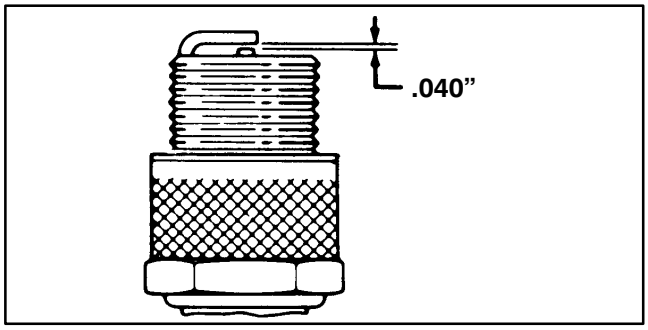

Figure 36

IMPORTANT: A cracked, fouled, dirty or otherwise malfunctioning spark plug must be replaced. Do not sand blast, scrape, or clean electrodes by using a wire brush because grit may eventually release from the plug and fall into the cylinder. The result is usually a damaged engine.

4. Set air gap between center and side of electrodes at .040". Install correctly gapped spark plug and tighten plug to 18−22 ft−lb. If torque wrench is not used, tighten plug firmly.

5. Install spark plug wires.

ADJUSTING ACCELERATOR (Fig. 37)

Check adjustment every 200 hours.

1. Position vehicle on level surface, stop engine and engage the parking brake.

2. With return spring installed, hold engine governor arm toward operator's side of vehicle and adjust low idle stop to obtain a .01" − .05" gap between O.D. of hole in throttle lever and inside of governor spring hook.

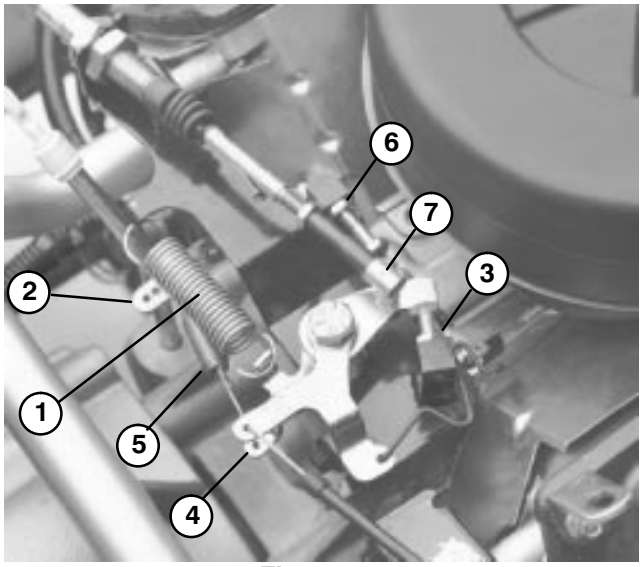

Figure 37

1. Return spring
2. Engine governor arm
3. Low idle stop
4. Throttle lever
5. Governor spring
6. High idle stop
7. Ball joint

WARNING

Engine must be running so final adjustment of the accelerator can be performed. To guard against possible personal injury, engage parking brake and keep hands, feet, face and other parts of body away from any moving parts.

3. Start engine and allow it to warm up to normal operating temperature. Verify low idle setting of 1200 ± 100 rpm.

4. Adjust high idle stop to obtain 3600 ± 50 rpm when throttle lever contacts stop.

5. Stop engine.

6. Adjust ball joint on accelerator cable and/or cable jam nuts while throttle lever is against high idle stop to allow .100"− .250" of clearance between accelerator pedal arm and top of diamond tread floor plate, when a 25 lb. force is applied to center of pedal. Tighten locknut.

Note: Engine must not be running and return spring must be attached.

CHANGING TRANSAXLE / HYDRAULIC FLUID (Fig. 38)

Change Transaxle hydraulic fluid, filter and clean strainer every 600 hours.

1. Position the vehicle on a level surface, stop engine, engage the parking brake and remove key from ignition switch.

2. Remove drain plug from side of reservoir and let hydraulic fluid flow into drain pan. Reinstall and tighten plug when hydraulic fluid stops draining.

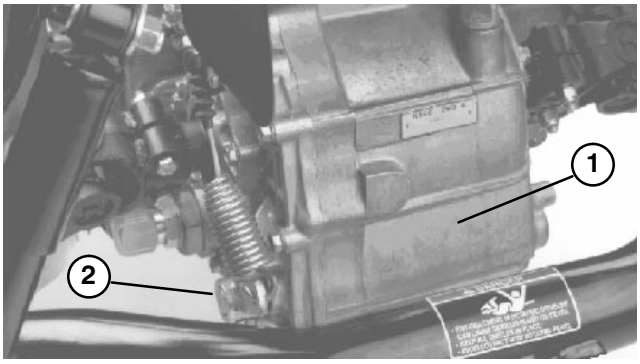

Figure 38

1. Hydraulic Reservoir
2. Drain plug

3. Fill reservoir with approximately 7.5 qt. of Dexron III ATF. Refer to Checking Hydraulic Fluid.

4. Start engine and operate to fill hydraulic system. Recheck oil level and replenish, if required.

IMPORTANT: Use only hydraulic fluids specified. Other fluids could cause system damage.

REPLACING HYDRAULIC FILTER (Fig. 39)

Use the Toro replacement filter (Part No. 54−0110).

IMPORTANT: Use of any other filter may void the warranty on some components.

1. Position vehicle on a level surface, stop engine, engage the parking brake and remove key from ignition switch.

2. Clean area around filter mounting area. Place drain pan under filter and remove filter.

3. Lubricate new filter gasket.

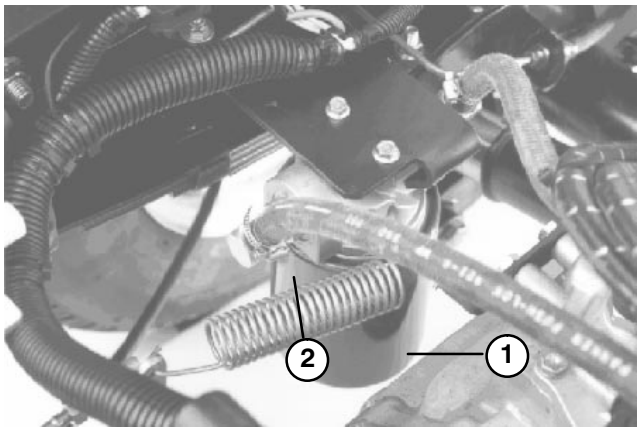

Figure 39
1. Hydraulic Filter
2. Gasket

4. Assure filter mounting area is clean. Screw filter on until gasket contacts mounting plate. Then tighten filter one−half turn.

5. Start engine and let run for about two minutes to purge air from the system. Stop the engine and check the hydraulic oil level and for leaks.

CLEANING HYDRAULIC STRAINER (Fig. 40)

1. Position the vehicle on a level surface, stop engine, engage the parking brake and remove key from ignition switch.

2. Remove drain plug (Fig. 38) from side of reservoir and let hydraulic fluid flow into drain pan.

3. Note orientation of hydraulic hose and 90° fitting connected to strainer on side of reservoir. Remove hydraulic hose and 90° fitting.

4. Remove strainer and clean by back flushing with a clean degreaser. Allow to air dry before reinstalling.

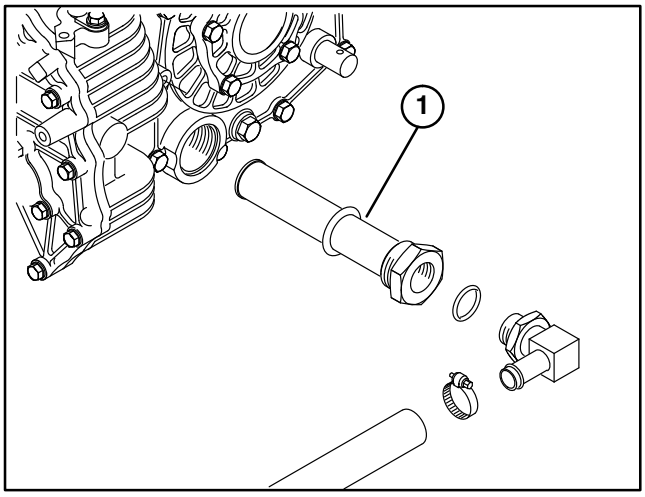

Figure 40
1. Hydraulic strainer

5. Reinstall strainer.

6. Reinstall hydraulic hose and 90° fitting to strainer in same orientation.

7. Reinstall and tighten drain plug.

8. Fill reservoir with approximately 7.5 qt. of Dexron II ATF. Refer to Checking Hydraulic Fluid.

ADJUSTING BRAKE PEDAL (Fig. 41−42)

Check adjustment every 200 hours.

1. Loosen jam nut on link rod ball joint.

2. Rotate rod until gap between brake pedal and up stop is .020−.080".

3. Tighten jam nut after adjustment has been attained.

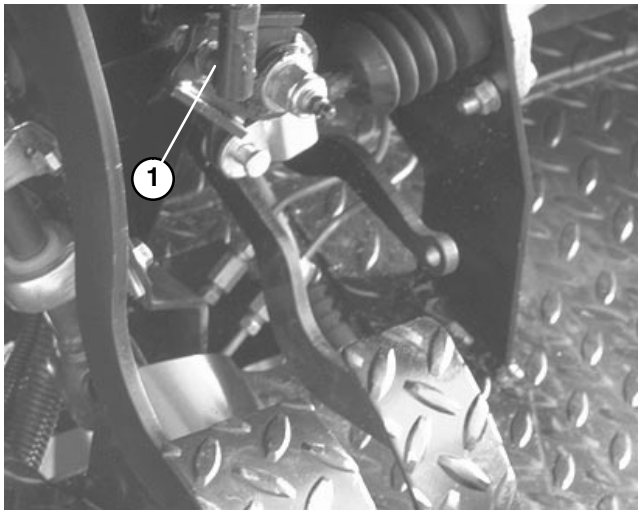

Figure 41
1. Link rod ball joint

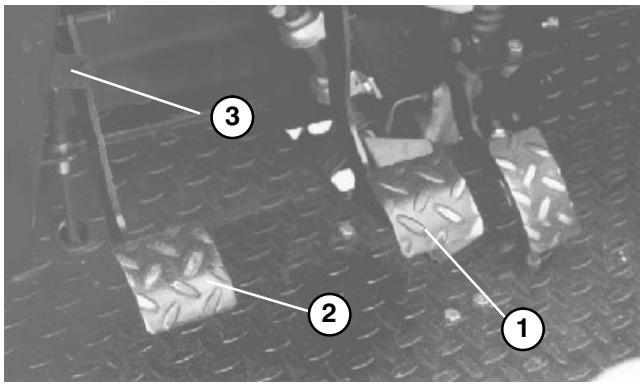

Figure 42
1. Brake pedal
2. Clutch pedal
3. Clutch pedal upstop

ADJUSTING CLUTCH PEDAL (Fig. 43–44)

Check adjustment every 200 hours.

1. Loosen jam nuts securing clutch cable to bracket on bell housing.

2. Disconnect return spring from clutch lever.

3. Adjust jam nuts until bottom rear edge of clutch pedal is 3.75" ± .12" from top of floor plate diamond pattern, when an 4 lb. force is applied to pedal.

Note: Force is applied so release bearing lightly contacts pressure plate fingers.

4. Reconnect return spring to clutch lever.

5. Verify that rear edge of clutch pedal is 5.5" ± .12" from top of floor plate diamond pattern. If dimension is not attained, adjust clutch pedal up stop.

Note: The clutch free play should never be less than .75".

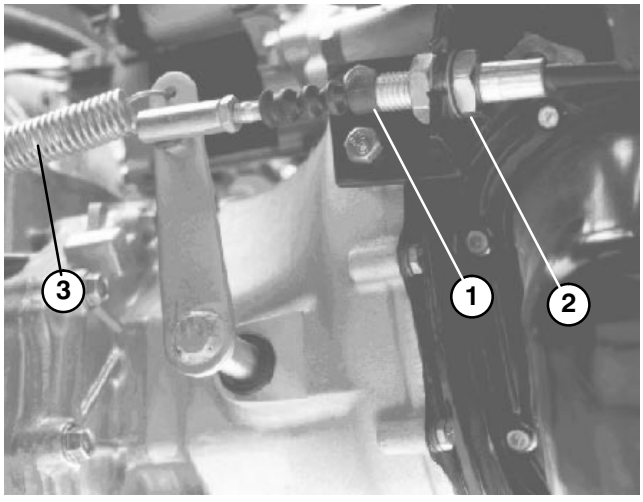

Figure 43

1. **Clutch cable**
2. **Jam nuts**
3. **Return spring**

6. Tighten jam nuts after adjustment has been attained.

7. Recheck clutch safety switch adjustment (Fig. 44). Engine must not crank unless clutch pedal is 1.25" ±.12" from floor. If an adjustment is required, loosen switch jam nuts and adjust up or down.

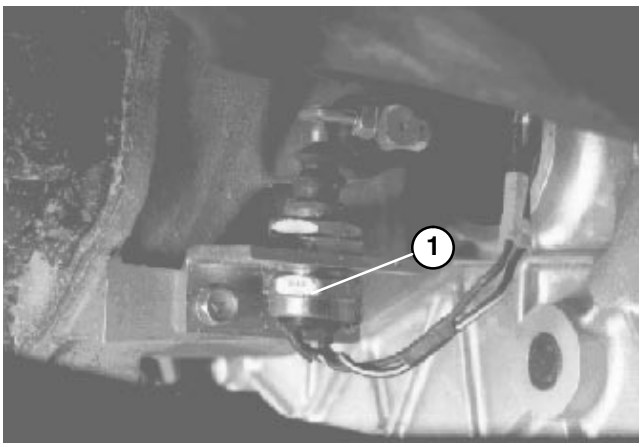

Figure 44

1. **Clutch switch**

ADJUSTING PARKING BRAKE (Fig. 45)

Check adjustment every 200 hours.

1. Loosen set screw securing knob to parking brake lever.

2. Rotate knob until a force of 45 lbs. is required to actuate lever.

3. Tighten set screw after adjustment has been attained.

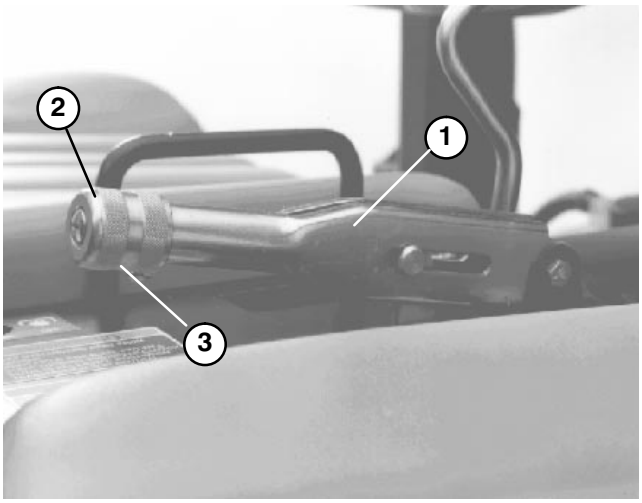

Figure 45

1. **Parking brake lever**
2. **Knob**
3. **Set screw**

ADJUSTING SHIFT CABLES (Fig. 46)

Check adjustment every 200 hours.

1. Move shift lever to Neutral position.

2. Remove clevis pins securing shift cables to transaxle shift arms.

3. Loosen clevis jam nuts and adjust each clevis so cable free play is equal forward and backward relative to hole in transaxle shift arm (With transaxle lever free play taken up in same direction).

4. Reinstall clevis pins and tighten jam nuts after adjustments have been attained.

ADJUSTING HIGH−LOW CABLE (Fig. 46)

Check adjustment every 200 hours.

1. Remove clevis pin securing High−Low cable to transaxle.

2. Loosen clevis jam nut and adjust clevis so clevis hole aligns with hole in transaxle bracket.

3. Reinstall clevis pin and tighten jam nut after adjustment has been attained.

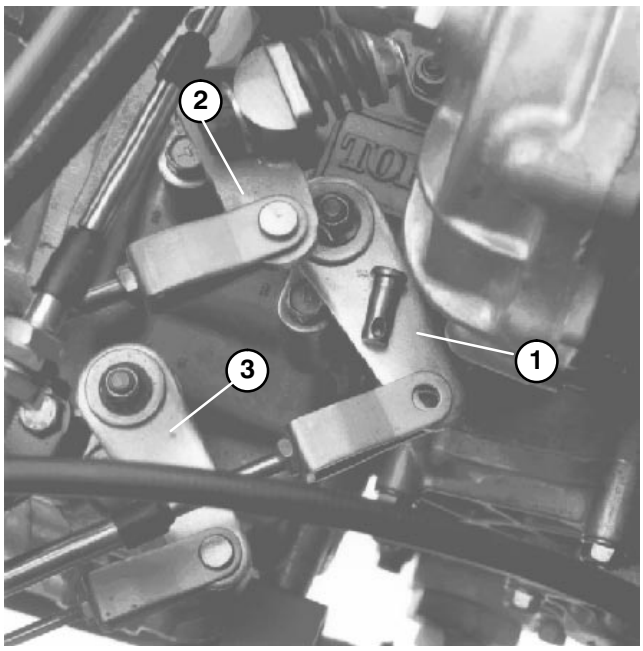

Figure 46
1. **Shift arm (1st − Rev.)**
2. **Shift arm (2nd − 3rd)**
3. **Shift arm (High−low)**

ADJUSTING DIFFERENTIAL LOCK CABLE (Fig. 47)

Check adjustment every 200 hours.

1. Move differential lock lever to Off position.

2. Loosen jam nuts securing differential lock cable to bracket on transaxle.

3. Adjust jam nuts to obtain .035" ± .025" gap between spring hook and O.D. of hole in transaxle lever.

4. Tighten jam nuts after adjustment has been attained.

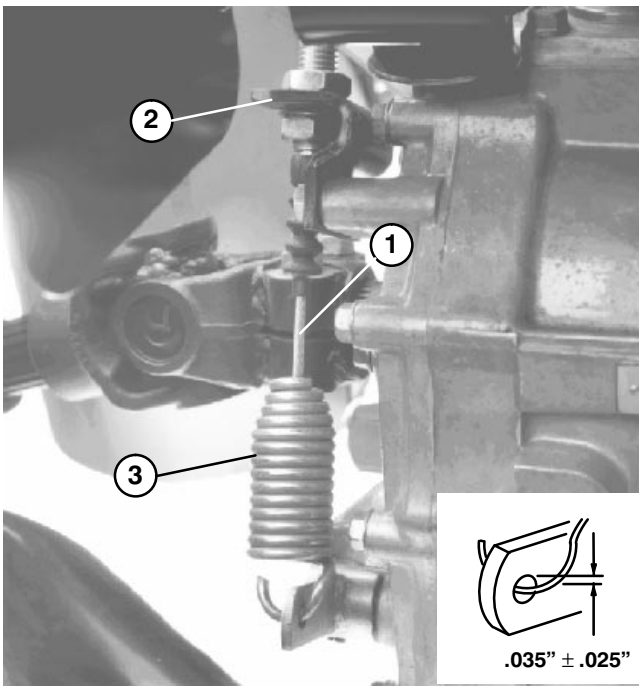

Figure 47
1. **Differential lock cable**
2. **Transaxle bracket**
3. **Spring**

INSPECT BRAKES

Visually inspect brakes for worn brake shoes after every 400 hours of operation.

INSPECT TIRES

Check tire condition at least every 100 hours of operation. Operating accidents, such as hitting curbs, can damage a tire or rim and also disrupt wheel alignment, so inspect tire condition after an accident.

FRONT WHEEL TOE−IN (Fig. 48−49)

After every 400 operating hours or annually, check front wheel toe−in.

1. Measure center−to−center distance (at axle height) at front and rear of steering tires. Front measurement must be equal to the rear measurement ±1/8 in..

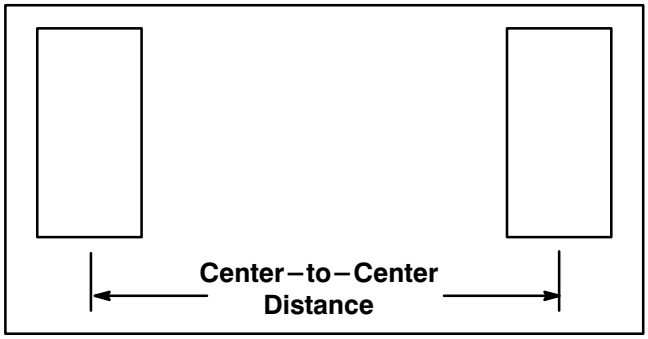

Figure 48

2. To adjust**,** loosen jam nuts at both ends of tie rod.

3. Rotate tie rod to move front of tire inward or outward.

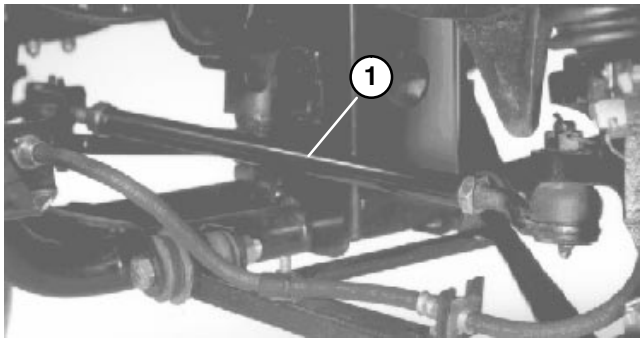

Figure 49
1. Tie rod

4. Tighten tie rod jam nuts when adjustment is correct.

EMERGENCY BOX RAISING (without starting engine)

The box can be raised in an emergency by cranking starter and holding lift lever. Run starter for 10 seconds then wait 60 seconds before engaging starter again.

If engine will not crank, the load and box (attachment) must be removed to service engine or transaxle.

FUSES (Fig. 50)

There are 3 fuses in the machine's electrical system. They are located under right side of dash panel.

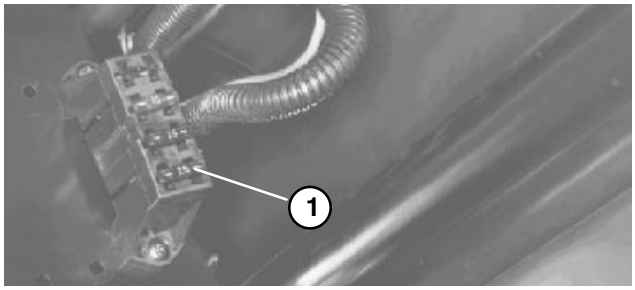

Figure 50
1. Fuse block

FUSES	
OPEN	– –
LIGHTS & HORN	10A
DASH	7.5A
IGNITION	7.5A

JUMP STARTING PROCEDURE

WARNING

Jump starting can be dangerous. To avoid personal injury or damage to electrical components in vehicle, observe the following warnings:

- **Never jump start with a voltage sources greater than 15 volts D.C. This will damage the electrical system.**
- **Never attempt to jump start a discharged battery that is frozen. It could rupture or explode during jump starting.**
- **Observe all battery warnings while jump starting your vehicle.**
- **Be sure your vehicle is not touching the jump start vehicle.**
- **Connecting cables to the wrong post could result in personal injury and/or damage to the electrical system.**

1. Loosen knobs securing battery cover to battery base and slide cover off.

2. Connect a jumper cable between the positive posts of the two batteries. The positive post may be identified by a "+" sign on top of battery cover.

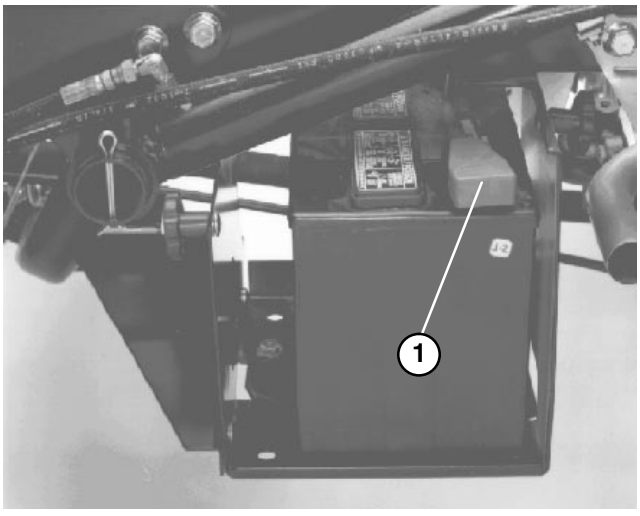

Figure 51
1. Positive (+) cable

3. Connect one end of the other jumper cable to the negative terminal of the battery in the other vehicle. The negative terminal has "NEG" on the battery cover. Do not connect the other end of the the jumper cable to the negative post of the discharged battery. Connect it to the engine. Do not connect the jumper cable to the fuel system.

4. Start the engine in the vehicle providing the jump start. Let it run a few minutes, then start your engine.

5. Remove the negative jumper cable first from your engine, then the battery in the other vehicle.

6. Reinstall battery cover to battery base and tighten knobs.

BATTERY STORAGE

If the machine will be stored for more than 30 days, remove the battery and charge it fully. Either store it on the shelf or on the machine. Leave the cables disconnected if stored on the machine. Store the battery in a cool atmosphere to avoid quick deterioration of the charge in the battery. To prevent battery from freezing, make sure it is fully charged. The specific gravity of a fully charged battery is 1.250.

BATTERY CARE

1. Battery electrolyte level must be properly maintained and the top of the battery kept clean. If the machine is stored in a location where temperatures are extremely high, the battery will run down more rapidly than if the machine is stored in a location where temperatures are cool.

2. Keep top of battery clean by washing periodically with a brush dipped in ammonia or bicarbonate of soda solution. Flush the top surface with water after cleaning. Do not remove the fill cap while cleaning.

3. Battery cables must be tight on terminals to provide good electrical contact.

4. If corrosion occurs at terminals,remove battery cover, disconnect cables, negative (−) cable first and scrape clamps and terminals separately. Reconnect cables, positive (+) cable first and coat terminals with petroleum jelly.

5. Check the electrolyte level every 50 operating hours or, if machine is in storage, every 30 days.

6. Maintain cell level with distilled or demineralized water. Do not fill cells above the bottom of the fill ring inside each cell.



CAUTION

Wear safety goggles and rubber gloves when working with electrolyte. Charge the battery in a well ventilated place so gasses produced while charging can dissipate. Since the gases are explosive, keep open flames and electrical spark away from the battery; do not smoke. Nausea may result if the gases are inhaled. Unplug charger from electrical outlet before connecting to or disconnecting charger leads from battery posts.

MAINTENANCE SCHEDULE

Minimum Recommended Maintenance Intervals

Maintenance Procedure	Maintenance Interval & Service				
	Every 50hrs	Every 100hrs	Every 200hrs	Every 400hrs	Every 800hrs
Check Battery Fluid Level	●	●	●	●	●
Check Battery Cable Connections	●	●	●	●	●
Lubricate Engine Prefilter	●	●	●	●	●
† Change Engine Oil and Filter	●	●	●	●	●
Lubricate All Grease Fittings		●	●	●	●
Remove Engine Shrouds, Clean Fins		●	●	●	●
Inspect Condition and Wear of Tires		●	●	●	●
‡ Check Cable Adjustments			●	●	●
‡ Check Pump Drive Belt Tension			●	●	●
Replace Air Filter			●	●	●
Check Engine RPM (idle and full throttle)			●	●	●
‡ Torque Wheel Lug Nuts			●	●	●
Check Front Wheel Alignment				●	●
Inspect Service and Parking Brakes				●	●
Inspect Fuel Lines				●	●
Replace Fuel Filter				●	●
‡ Replace Transaxle Filter					●
Change Transaxle Oil					●
Clean Transaxle Strainer					●
Pack Front Wheel Bearings					●
Replace Spark Plugs					●

† Initial break in at 5 hours

‡ Initial break in at 10 hours

Replace all Interlock Switches
Fuel Tank – Drain/Flush
Change Brake Fluid

Annual Recommendations:
Items listed are recommended every 1200 hours or 2 years, whichever occurs first.

HYDRAULIC SCHEMATIC

(Base Vehicle)

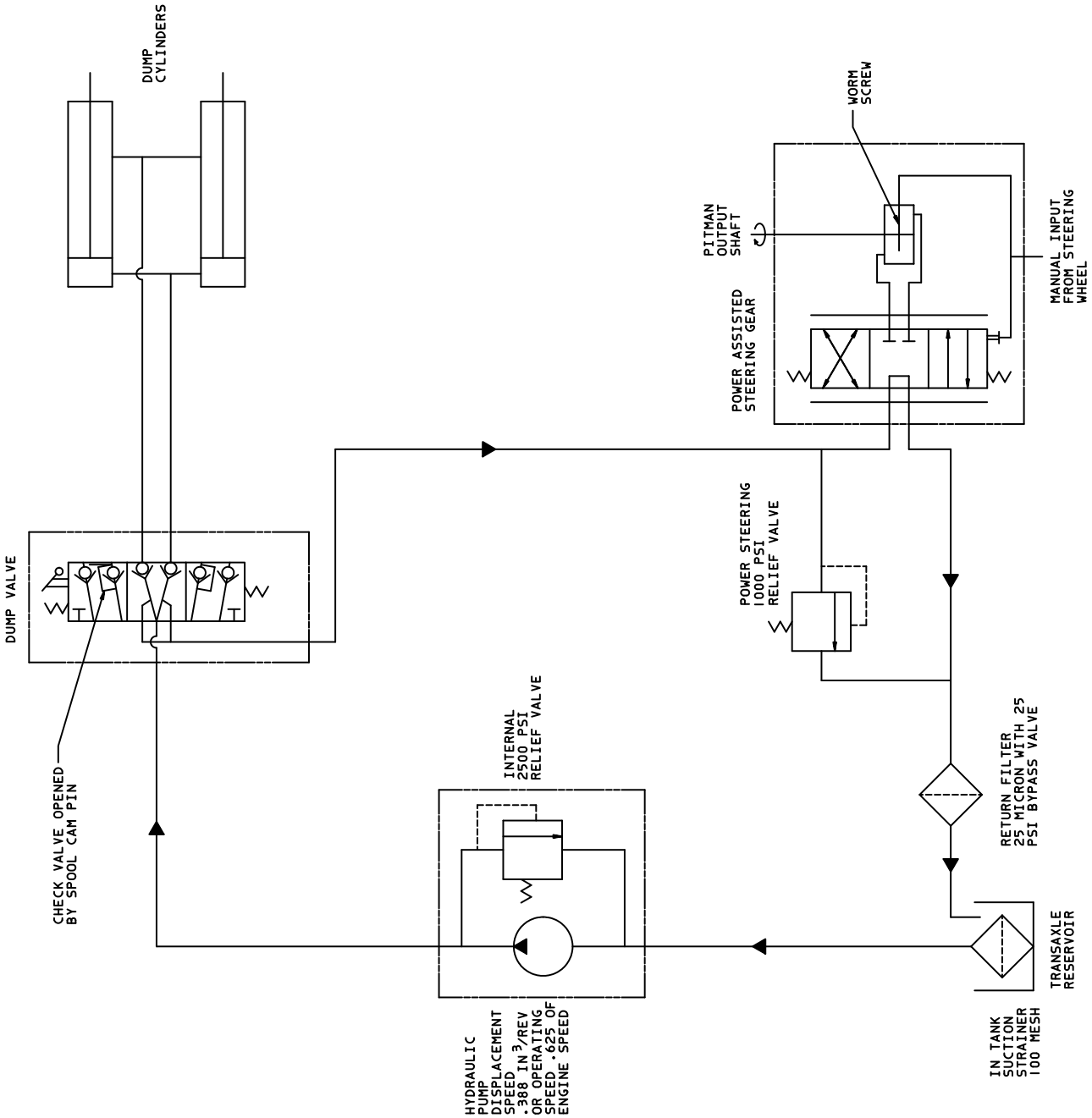

ELECTRICAL SCHEMATIC

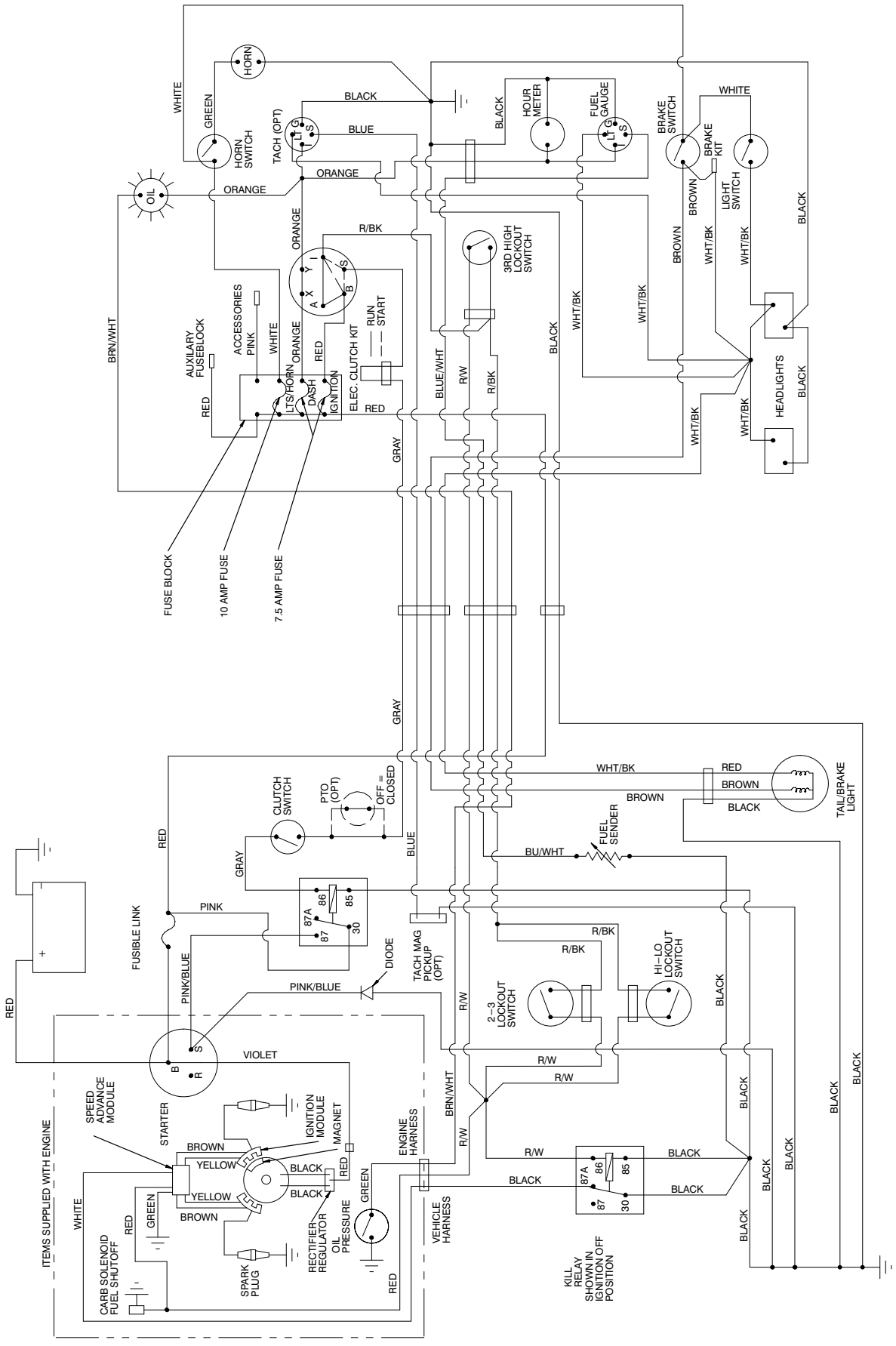

IDENTIFICATION AND ORDERING

MODEL AND SERIAL NUMBERS

The WORKMAN® 3100 has two identification numbers: a model number and a serial number. These numbers are stamped into a plate located on the right frame member under dash. In any correspondence concerning the unit, supply the model and serial numbers to ensure correct information and replacement parts are obtained.

Note: Do not order by reference number if a parts catalog is being used; use the part number.

To order replacement parts from an authorized TORO Distributor, supply the following information:

1. Model and serial numbers.

2. Part number, description, and quantity of parts desired.

The Toro Commercial Products Two Year Limited Warranty

The Toro Company warrants your 1996 or newer Toro Commercial Product ("Product") purchased after January 1, 1997, to be free from defects in materials or workmanship for the period of time listed below. Where a warrantable condition exists, Toro will repair the Product at no cost to you including diagnosis, labor, parts, and transportation. This warranty begins on the date the Product is delivered to the original retail purchaser.

Warranty Duration: Two years or 1500 operational hours*, whichever occurs first.
***Product equipped with hour meter**

Owner Responsibilities:

As the Product owner, you are responsible for required maintenance and adjustments stated in your Owner's Manual. Failure to perform required maintenance and adjustments can be grounds for disallowing a warranty claim.

Instructions for Obtaining Warranty Service:

You are responsible for notifying the Commercial Products Distributor or Authorized Commercial Products Dealer from whom you purchased the Product as soon as you believe a warrantable condition exists.

If you need help locating a Commercial Products Distributor or Authorized Dealer, or if you have questions regarding your warranty rights or responsibilities, you may contact us at:

Toro Commercial Products Service Department
8111 Lyndale Avenue South
Minneapolis, MN, 55420–1196
Telephone: (612) 888–8801
Facsimile: (612) 887–8258
E–Mail: Commercial.Service@Toro.Com

Maintenance Parts:

Parts scheduled for replacement as required maintenance ("Maintenance Parts"), are warranted for the period of time up to the scheduled replacement time for that part.

Items/Conditions Not Covered:

Not all product failures or malfunctions that occur during the warranty period are defects in materials or workmanship. The items / conditions listed below are not covered by this warranty:

- Product failures which result from the use of non–Toro replacement parts, or from installation and use of add–on, modified, or unapproved accessories are not covered.
- Product failures which result from failure to perform required maintenance and/or adjustments are not covered.
- Product failures which result from operating the Product in an abusive, negligent or reckless manner are not covered.
- This warranty does not apply to parts subject to consumption through use unless found to be defective. Examples of parts which are consumed, or used up, during normal Product operation include, but are not limited to, blades, reels, bedknives, tines, spark plugs, castor wheels, tires, filters, belts, etc.
- This warranty does not apply to failures caused by outside influence. Items considered to be outside influence include, but are not limited to, weather, storage practices, contamination, use of unapproved coolants, lubricants, additives, or chemicals, etc.
- This warranty does not apply to normal "wear and tear" items. Normal "Wear and Tear" includes, but is not limited to, damage to seats due to wear or abrasion, worn painted surfaces, scratched decals or windows, etc.

Other Legal Disclaimers:

The above remedy of product defects through repair by an authorized distributor or dealer is the purchaser's sole remedy for any defect. This warranty gives you specific legal rights, and you may also have other rights which vary from state to state.

Except for the Emissions warranty referenced below, if applicable, there is no other express warranty. All implied warranties of merchantability and fitness for use are limited to the duration of the express warranty.

Some states do not allow limitations on how long an implied warranty lasts, so the above limitation may not apply to you.

The Toro Company is not liable for indirect, incidental or consequential damages in connection with the use of the Product, including any cost or expense of providing substitute Product or service during periods of malfunction or non–use.

Some states do not allow the exclusion of incidental or consequential damages, so the above exclusion may not apply to you.

Note to California residents: The Emissions Control System on your Product may be covered by a separate warranty meeting requirements established by the U.S. Environmental Protection Agency (EPA), or the California Air Resources Board (CARB). The hour limitations set forth above do not apply to the Emissions Control System Warranty. Refer to the California Emission Control Warranty Statement printed in your Owner's Manual or contained in the engine manufacturer's documentation for details.