FORM NO. 3317–669 Rev. B

TORO®

SIDE DISCHARGE MODEL:
30722–51124 thru 70001 & UP
REAR DISCHARGE MODEL:
30710–50251 thru 70001 & UP

OPERATOR'S MANUAL

72" CUTTING UNITS

FOR GROUNDSMASTER 300 SERIES TRACTION UNITS

To assure maximum safety, optimum performance, and to gain knowledge of the product, it is essential that you or any other operator of the machine read and understand the contents of this manual before the engine is ever started. Pay particular attention to the SAFETY INSTRUCTIONS highlighted by this symbol —

The safety alert symbol means CAUTION, WARNING or DANGER — personal safety instruction. Failure to comply with the instruction may result in personal injury.

TORO®
THIS UNIT CONFORMS TO
ANSI/OPEI B71.4–1990

The Groundsmaster 300 Series Traction unit with a 72" Side Discharge Deck or 72" Rear Discharge Deck conforms to the American National Standards Institute's for Riding Mowers when weights are installed according to chart on page 10.

©The Toro Company — 1995, 1996

FOREWORD

The cutting units have advanced concepts in engineering, design and safety; and if maintained properly, will give excellent service.

Since they are high–quality products, Toro is concerned about the future use of the machines and safety of the user. Therefore, read this manual to familiarize yourself with proper set–up, operation and maintenance instructions. The major sections of the manual are:

1. Safety Instructions
2. Set–up Instructions
3. Before Operating
4. Lubrication
5. Maintenance

Certain information in this manual is emphasized. DANGER, WARNING and CAUTION identify personal safety-related information. IMPORTANT identifies mechanical information demanding special attention. Be sure to read this directive because it deals with the possibility of damaging a part or parts of the machine. NOTE identifies general information worthy of special attention.

TABLE OF CONTENTS

	Page
SAFETY INSTRUCTION	2–4
SAFETY AND INSTRUCTION DECALS	4
SPECIFICATIONS	5
LOOSE PARTS	5
SET–UP INSTRUCTIONS	5–10
Install Castor Wheel Assemblies	5
Lower Grass Deflector	6
Install Ball Joint and Connect Lift Cylinder	7
Install Belly Shield	6
Connect PTO Shaft to Traction Unit	8
Connect Right Hand Push Arm To Cutting Unit	8
Connect Left Hand Push Arm To Cutting Unit	8
Connect PTO Shaft and Install Lift Chains	9
Grease Cutting Unit	10
Install Rear Weight	10
BEFORE OPERATING	10
OPERATING INSTRUCTIONS	11
Adjusting Height-of-Cut	11
Grass Deflector	11
LUBRICATION MAINTENANCE	12
CUTTING UNIT MAINTENANCE	13–18
Troubleshooting	13
Separating Cutting Unit from Traction Unit	14
Mounting Cutting Unit to Traction Unit	14
Replacing Blade Drive Belts	15
Servicing Bushings in Caster Arms	15
Servicing Rear Caster Wheel and Bearing	16
Servicing Front Wheel Caster Bearing	16
Removing Cutter Blade	17
Inspecting and Sharpening Blade	17
Checking and Correcting Mismatch of Blade	18
IDENTIFICATION AND ORDERING	19
THE TORO PROMISE	20

SAFETY INSTRUCTIONS

The safety alert symbol means CAUTION, WARNING or DANGER — "personal safety instruction". Read and under stand the instruction because it has to do with safety. Failure to comply with the instruction may result in personal injury.

The cutting units have been tested and certified by TORO for compliance with the B71.4—1990 specifications of the American National Standards Institute. Although hazard control and accident prevention partially are dependent upon the design and configuration of the machine, these factors are also dependent upon the awareness, concern, and proper training of the personnel involved in the operation, transport, maintenance, and storage of the machine. Improper use or maintenance of the machine can result in injury or death. To reduce the potential for injury or death, comply with the following safety instructions.

BEFORE OPERATING

1. Read and understand the contents of this Operator's Manual before operating the machine. Become familiar with all controls and know how to stop quickly. A free replacement manual is available by sending complete Model and Serial Number to:

The Toro Company
8111 Lyndale Avenue South
Minneapolis, Minnesota 55420

2. Never allow children to operate the machine. Do not allow adults to operate the machine without proper instruction. Only trained operators who have read this manual should operate this machine.

SAFETY INSTRUCTIONS

3. Never operate the machine when under the influence of drugs or alcohol.

4. Remove all debris or other objects that might be picked up and thrown by the cutter blades. Keep all bystanders away from the mowing area.

5. Keep all shields and safety devices in place. If a shield, safety device or decal is damaged, malfunctioning, or illegible, repair or replace it before operation is commenced. Also tighten any loose nuts, bolts and screws to ensure machine is in safe operating condition.

6. Do not operate machine while wearing sandals, tennis shoes, sneakers or shorts. Also, do not wear loose fitting clothing which could get caught in moving parts. Always wear long pants and substantial shoes. Wearing safety glasses, safety shoes and a helmet is advisable and required by some local ordinances and insurance regulations.

7. Check interlock switches daily for proper operation (Refer To Section in Traction Unit Operator's Manual on Checking Interlock Switches). Do not rely entirely on safety switches -shut off engine before getting off seat. If a switch fails, replace it before operating the machine. The interlock system is for your protection, so do not bypass it. Replace all interlock switches every two years. Interlock switches should be adjusted so:

A. Engine cannot be started unless traction pedal is released (neutral position) and PTO lever is DISENGAGED (off position).

B. Engine stops if operator gets off seat when traction pedal is depressed.

C. Engine stops if operator gets off seat when PTO lever is ENGAGED (on position).

8. Grass deflectors must be installed in lowest position on side discharge units.

9. Fill fuel tank before starting the engine. Avoid spilling any fuel. Since fuel is flammable, handle it carefully.

A. Use an approved fuel container.

B. Do not fill tank while engine is hot or running.

C. Do not smoke while handling fuel.

D. Fill fuel tank outdoors and up to about one inch (25 mm) from the top of the tank (bottom of filler neck).

E. Wipe up any spilled fuel.

WHILE OPERATING

10. Do not run the engine in a confined area without adequate ventilation. Exhaust fumes are hazardous and could possibly be deadly.

11. Maximum seating capacity is one person. Never carry passengers.

12. Sit on the seat when starting the engine and operating the machine.

13. Before starting the engine:

A. Engage parking brake.

B. Ensure traction pedal is in neutral and PTO is in OFF, disengaged position.

C. After engine is started, release parking brake and keep foot off traction pedal. Machine must not move. If movement is evident, the neutral return mechanism is adjusted incorrectly; therefore, shut engine off and adjust until machine does not move when traction pedal is released.

14. Using the machine demands attention, and to prevent loss of control:

A. Mow only in daylight or when there is good artificial light.

B. Drive slowly and watch for holes or other hidden hazards.

C. Do not drive close to a sand trap, ditch, creek or other hazard.

D. Reduce speed when making sharp turns and when turning on hillsides.

E. Avoid sudden stops and starts.

F. Before backing up, look to the rear and assure no one is behind the machine.

G. Watch out for traffic when near or crossing roads. Always yield the right–of –way.

H. The cutting deck must be lowered when going down slopes for steering control.

15. If engine stalls or machine loses headway and cannot make it to the top of a slope, do not turn machine around. Always back slowly straight down the slope.

16. The grass deflector must always be installed in lowest position on the side discharge cutting unit. This product is designed to drive objects into the ground where they lose energy quickly in grassy areas. However, don't take an injury risk! ! When a person or pet appears unexpectedly in or near the mowing area, STOP MOWING. Careless operation, combined with terrain angles, ricochets, or improperly positioned guards, can lead to thrown object injuries. Do not resume mowing until area is cleared.

17. Never raise the cutting unit while the blades are rotating.

18. If the cutting blades strike a solid object or the machine vibrates abnormally, disengage PTO, move throttle to SLOW, set parking brake and shut engine off. Remove key from switch to prevent possibility of accidental starting. Check cutting unit and traction unit for damage and defective parts. Repair any damage before restarting the engine and operating the cutting unit. Be sure blades are in good condition and blade bolts are tight.

19. Cut grass slopes carefully. Do not start, stop, or turn suddenly when traveling uphill or downhill.

SAFETY INSTRUCTIONS

20. Do not touch engine, muffler or radiator while engine is running or soon after it is stopped. These areas could be hot enough to cause a burn.

21. Before getting off the seat:

A. Move traction pedal to neutral position and remove foot from pedal.

B. Set parking brake and disengage the PTO.

C. Shut the engine off and remove key from ignition switch. Wait for all movement to stop before getting off the seat.

22. Lower the cutting unit to the ground and remove key from ignition switch whenever machine is left unattended.

23. This product may exceed noise levels of 85 dB(a) at the operator position. Ear protectors are recommended for prolonged exposure to reduce the potential of permanent hearing damage.

MAINTENANCE

24. Remove key from ignition switch to prevent accidental starting of the engine when servicing, adjusting or storing the machine.

25. Perform only those maintenance instructions described in this manual. If major repairs are ever needed or assistance is desired, contact an Authorized Toro Distributor. Ask about Red Wagon Maintenance.

26. To reduce potential fire hazard, keep the engine free of excessive grease, grass, leaves and accumulations of dirt.

27. Assure machine is in safe operating condition by keeping nuts, bolts and screws tight. Check the blade mounting bolts frequently to assure they are tight.

28. Make sure all hydraulic line connectors are tight, and all hydraulic hoses and lines are in good condition before applying pressure to the system.

29. Keep body and hands away from pin hole leaks in hydraulic lines that eject high pressure hydraulic fluid. Use paper or cardboard, not hands, to search for hydraulic leaks. Hydraulic fluid escaping under pressure can have sufficient force to penetrate skin and do serious damage. If fluid is injected into the skin it must be surgically removed within a few hours by a doctor familiar with this form of injury or gangrene may result.

30. Before disconnecting or performing any work on the hydraulic system, all pressure in system must be relieved by stopping engine and lowering implement to the ground.

31. If the engine must be running to perform a maintenance adjustment, keep hands, feet, clothing and other parts of the body away from the cutting unit blades and other moving parts.

32. Do not overspeed the engine by changing governor settings. To be sure of safety and accuracy, have an Authorized TORO Distributor check maximum engine speed with a tachometer.

33. Engine must be shut off before checking oil or adding oil to the crankcase.

34. At the time of manufacture the cutting units conformed to safety standards in effect for riding mowers. Therefore, to ensure optimum performance and safety, always purchase genuine TORO replacement parts and accessories to keep the Toro all TORO. NEVER USE “WILL–FIT” REPLACEMENT PARTS AND ACCESSORIES MADE BY OTHER MANUFACTURERS. Look for the TORO logo to assure genuineness. Using unapproved replacement parts and accessories could void the warranty of The Toro Company.

SAFETY AND INSTRUCTION DECALS

The following safety and instruction decals are installed on the unit. If any become damaged or illegible, replace them. Decal part numbers are listed under decals and also in your Parts Catalog. Order replacements from your Authorized Toro Distributor.

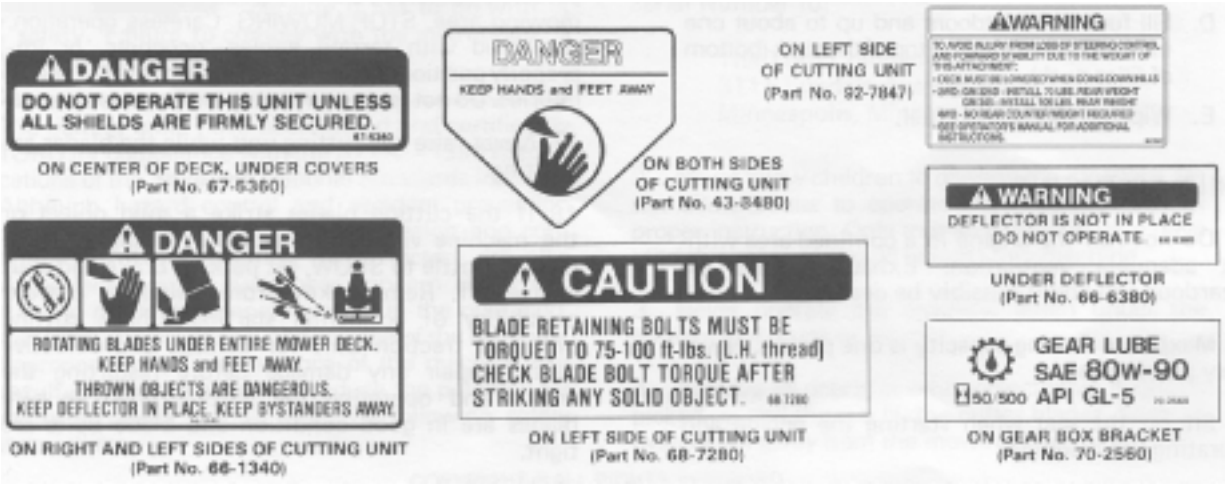

SPECIFICATIONS

Width of Cut: Models 30722 and 30710 have a 71-1/2 inch (1.816 m) width of cut.

Height–of–Cut: Adjustable from 1 to 4 in. (25 to 102 mm) in 1/2 in. (13 mm) increments.

Cutter Housing: Both cutter housings are made from 11 gauge (13 mm) steel and reinforced with 3-1/2 inch (89 mm) x 7 gauge (4.76 mm) channel iron.

Cutting Unit Drive: Gear box mounted on cutting unit is driven by PTO shaft. Power is transmitted to the blades by three B section belts. Spindle shafts are 1–1/4 inch (32 mm) in diameter and supported by two externally sealed, greaseable, tapered roller bearings.

Cutting Unit: Front mounted cutting units have front and rear caster wheels, three heat–treated steel blades 25 inches (0.63 m) long and 1/4 inch (6 mm) thick.

Caster Wheels: Two front castor wheels have roller bearings with 10.25 in. (260.4 mm) x 3.25 in. (82.55 mm) hard rubber tires. Rear wheels have roller bearings and 6 in. (152.8 mm) x 2.50 in. (63.5 mm) hard rubber tires.

Blade Tip Speed: At 3200 engine rpm, blade tip speed is 15,000 ft/min. (76.2 m/sec.).

Cutting Unit Lift: Cutting units are lifted by hydraulic cylinder that has a 2–1/2 in. (64 mm) bore and 3–1/4 in. (82 mm) stroke.

Dimensions and Weights (approx):

Model 30722	Width: 85–1/2 in. (2.17 m) Weight: 400 lb (181.4 Kg)
Model 30710	Width: 76 in. (1.93 m) Weight: 415 lb (188.2 Kg)

Optional Equipment:

High Sail Blade	Part No. 23–2410
23 x 10.5 x 12 Tire and Wheel (Model 30722 only)	Part No. 36–1050

LOOSE PARTS

NOTE: Use this chart as a checklist to assure all parts necessary for assembly have been shipped. Without any of these parts, total set–up cannot be completed.

Description	Qty.	Use
Large Caster Wheel Assembly Small Caster Wheel Assembly	2 2	Install Caster Wheel Assembly, page 5.
Belly Shield Belly Shield Hook Locknut–5/16 Belly Shield Hanger Capscrew–3/8 NC x 1–1/4 Nut Hairpin Cotter Clevis Pin–3/8 x 1–7/8 Belly Shield Spacer	1 2 4 2 2 2 2 2 2	Install Belly Shield, page 6. (Model 30710 only) (Diesel only)
Capscrew 7/16–14 x 3 Flatwasher 15/32 I.D. x 59/64 O.D. Nut 7/16–14	2 2 2	Connect Right Hand Push Arm to Cutting Unit, page 7.
Flatwasher 15/32 I.D. x 59/64 O.D. Capscrew 7/16–14 x 3 Nut 7/16–14	2 2 2	Connect Left Hand Push Arm to Cutting Unit, page 8.
PTO Shaft Capscrews 5/16 – 18 x 1–3/4” lg. Locknuts 5/16 – 18 Roll Pin 3/16 x 1–1/2” lg.	1 2 2 2	Connect PTO Shaft page 8
Registration Card Decal–EEC 105 Operator’s Manual	1 1 1	

SET–UP INSTRUCTIONS

INSTALL CASTER WHEEL ASSEMBLIES

The thrust washers and spacers have been installed on caster wheel spindles and secured in place by the lynch pins. Remove these parts from the caster spindles.

1. Cut front and sides of carton and remove caster assemblies from carton. Squeeze back of wire on lynch pin, rotate wire and pull pins out of caster spindles.
2. Slide spacers and thrust washers off spindle.

3. Slide spacers onto castor spindle to get desired height–of–cut: refer to Height–of–Cut Chart, Page 10. Slide thrust washer onto spindle, push large caster spindle through front caster arm and small caster spindle through rear caster arm, install remaining spacers onto spindle and install lynch pin to secure assembly (Fig. 1, 2).

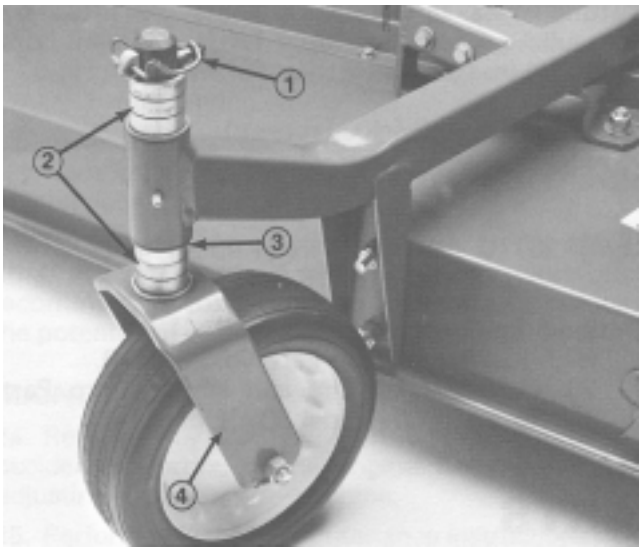

Figure 1

1. Lynch pin
2. Spacers
3. Thrust washer
4. Large (front) castor spindle

IMPORTANT: Thrust washer -- not the spacers -- must contact the bottom of the caster arm (Fig. 1, 2).

Note: Insert lynch pin in front side of spindle with caster wheels pointed in a forward direction (Fig. 1, 2).

4. Assure all four caster wheels are set at same height–of–cut and roll cutting unit off the wooden pallet.

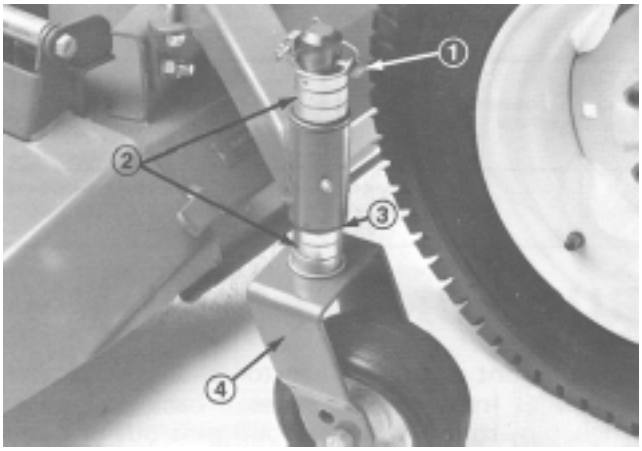

Figure 2

1. Lynch pin
2. Spacers
3. Thrust washer
4. Small (rear) caster spindle

GRASS DEFLECTOR (MODEL 30722)

1. Remove shipping bands allowing deflector to be lowered.

WARNING

Deflector is spring loaded in the down position and will rotate downward, if not restrained, when band is cut. If done improperly, it may cause personal injury.

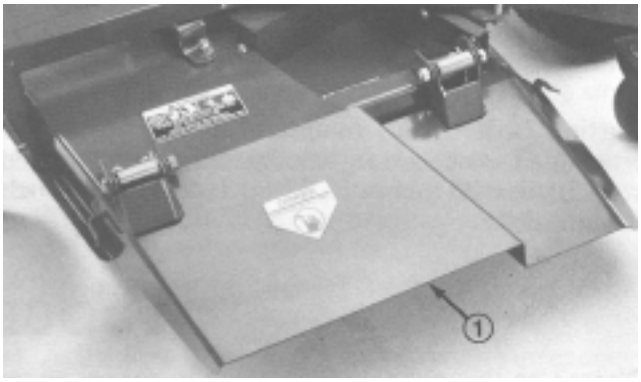

Figure 3

1. Deflector–lowest position

INSTALL BELLY SHIELD (MODEL 30710)

1. Position traction unit on level surface, shut engine off and engage parking brake.

2. Block up the forward end of engine to prevent it from shifting during disassembly.

3. Remove capscrew and flangenut securing front engine support to frame. Secure Belly Shield hanger and engine support to frame with 3/8 x 1–1/4 capscrew and flangenut. Repeat procedure on opposite side of machine (Fig. 4). Discard 3/8" x 1" long capscrew removed (gas units only).

Note: On diesel units a 3/8" thick spacer must be inserted between shield hanger and frame.

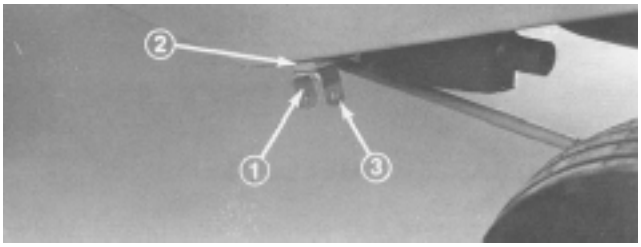

Figure 4

1. Capscrew and flangenut
2. Engine support or spacer (diesel only)
3. Shield hanger

4. Position Belly Shield mounting hooks over hub of push arm mounting brackets (Fig. 5).

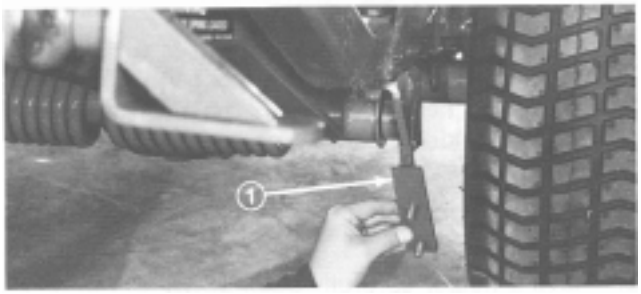

Figure 5
1. Belly shield mounting hooks

5. Secure Belly Shield to Belly Shield hooks with (2) 5/16 locknuts on each side (Fig. 6).

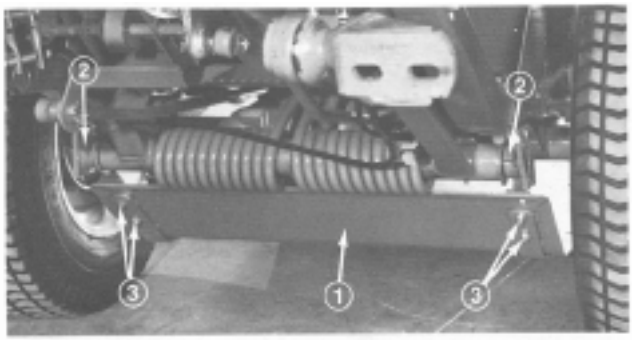

Figure 6
1. Belly shield
2. Belly shield hook
3. Locknuts

6. Raise rear of Belly Shield and secure to Belly Shield hangers with a clevis pin and hairpin cotter on each side (Fig. 7). Push hairpin cotter all the way to loop, to prevent loss.

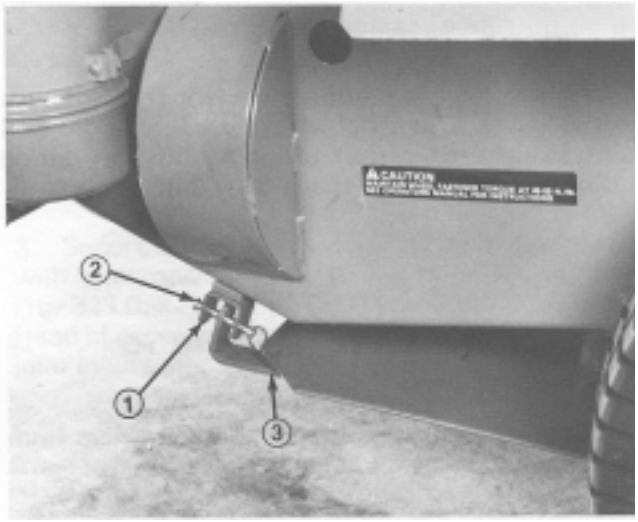

Figure 7
1. Belly shield hanger
2. Clevis pin
3. Hairpin cotter

INSTALL BALL JOINT AND CONNECT LIFT CYLINDER

Note: Ball joints are shipped with traction units.

1. Thread jam nut fully onto right hand ball joint.

2. Screw ball joint into right hand push arm until center of ball joint is 2-3/8 inches (60 mm) away from front of push arm (Fig. 8). Do not tighten jam nut.

WARNING

Since push arms are spring loaded, a helper is required to push the arms down during installation of the ball joints or other implements. Sudden release of the push arms could cause injury.

4. Have a helper push down on the left push arm. Then insert a 2 x 4 in. (51 x 102 mm) block of wood between the frame and top of the push arm (Fig. 8). Screw ball joint into left hand push arm until center of ball joint is 2-3/8 inches (60 mm) away from front of push arm (Fig. 9). Do not tighten jam nut.

5. Carefully remove 2 x 4 in. (51 x 102 mm) block of wood from between frame and push arm.

6. Remove spring pin from cylinder pin and slide cylinder pin out of cylinder.

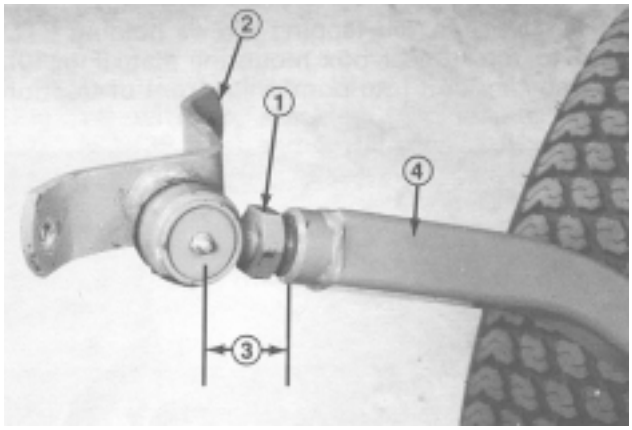

Figure 8
1. Jam nut
2. Ball joint mount
3. 2-3/8 in. (60 mm)
4. Right hand push arm

7. Raise front of list arm until hole in movable end of cylinder lines up with holes in lift arm brackets. Use caution as lift arm is spring-loaded. Hold parts together with cylinder pin, spring pin, and cotter pin. Cotter pin must be to the outside.

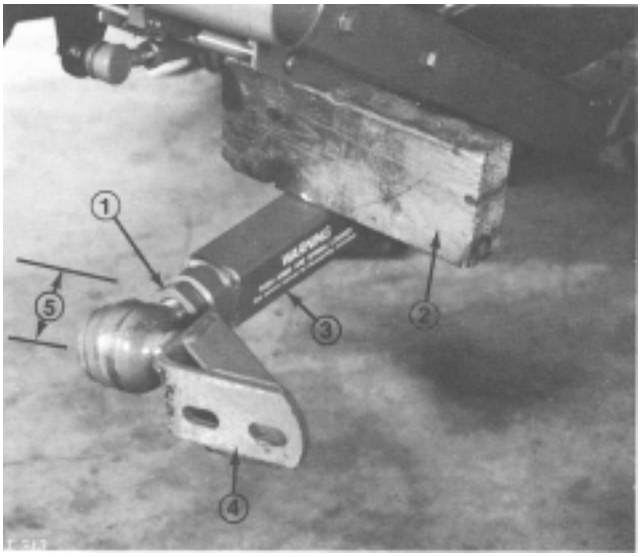

Figure 9

1. Jam nut
2. 2 x 4 in. (51 x 102 mm) block
3. Left hand push arm
4. Ball joint mount
5. 2-3/8 in. (60 mm)

CONNECT PTO SHAFT TO TRACTION UNIT

1. Slide smaller yoke end of PTO shaft onto traction unit PTO shaft onto traction unit PTO shaft while aligning mounting holes (Fig. 13). Secure with roll pin. Do not install front end of drive shaft at this time.

CONNECT RIGHT HAND PUSH ARM TO CUTTING UNIT

1. Remove bands securing PTO shaft to underside of traction unit.

2. Remove two self–tapping screws holding PTO shield to top of gear box mounting plate (Fig. 10). Move cutting unit into position in front of traction unit.

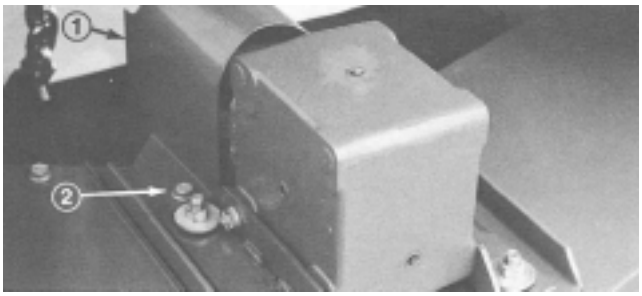

Figure 10

1. PTO shield
2. Self tapping screw (2)

WARNING

Since the right hand push arm is spring loaded to about 100 pounds (455 N), a helper is needed to push the arm down. Sudden release of the push arm could cause injury.

4. Have a helper carefully push down on the push arm until holes in ball joint mount line up with holes in caster arm.

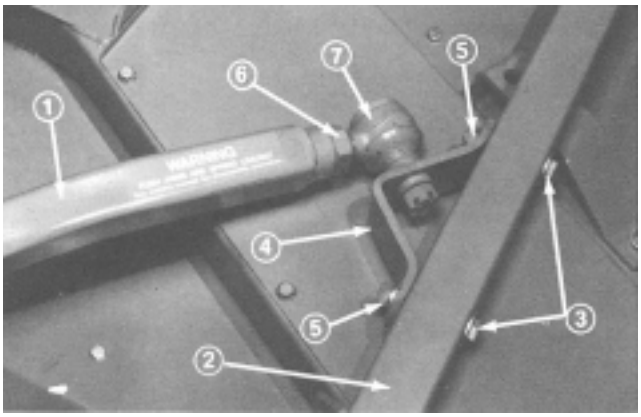

Figure 11

1. R.H. Push Arm
2. Caster Arm
3. Capscrews and flat washers
3. Ball joint mount
4. Flange locknuts
5. Jam nut
6. Ball joint

5. Secure ball joint mount to caster arm (Fig. 11) with two capscrews (7/16 – 14 x 3”), flatwasher (15/32 I.D. x 59/64 in. O.D.), and nuts (7/16 – 14). Head of capscrew and the large flatwasher must be outside of caster arm.

6. Tighten large jam nut against front of right push arm (Fig. 11). When tightening jam nut, hold ball joint straight to permit proper oscillation during raising and lowering of the cutting unit.

CONNECT LEFT HAND PUSH ARM TO CUTTING UNIT

1. Remove capscrews, nuts and flatwashers from push arm mount holes in left caster arm.

WARNING

Since left hand push arm is spring loaded to about 150 pounds (667 N) a helper is needed to push down on the push arm. Sudden release of the push arm could cause injury.

2. Have a helper carefully push down on the push arm until ball joint mount contacts front of mount bracket on cutting unit. Immediately slide 4 x 4 in. (102 x 102 mm) block of wood between top of push arm and underside of chassis.

WARNING

Make sure the wooden block does not slip out accidentally.

Note: If holes in ball joint mount do not line up with holes in mount bracket, turn ball joint until correct alignment results.

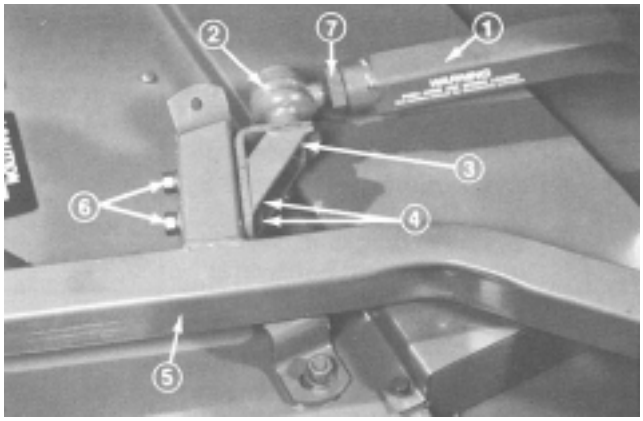

Figure 12

1. L.H. Push Arm
2. Ball joint
3. Ball joint mount
4. Capscrews and flatwashers
5. Caster arm
6. Flange locknuts
7. Jam nuts

3. Secure ball joint mount (Fig. 12) to mount bracket with two capscrews (7/16-14 x 3”), flatwater (15/32 I.D. x 59/64 in. O.D.) and nuts (7/16-14).Head of capscrews and flatwasher must contact ball joint mount.

4. Tighten large jam nut against front of left push arm (Fig. 12). When tightening jam nut, hold ball joint straight to permit proper oscillation during raising and lowering of cutting unit.

5. Carefully remove block holding push arm down.

CONNECT PTO SHAFT AND INSTALL LIFT CHAINS

IMPORTANT: The PTO shaft yokes must be exactly in line with each other when outer PTO sleeve is installed on splined shaft. Remove sleeve and change yoke position if alignment is not correct. Misalignment of the two yokes will shorten life of PTO shaft assembly and cause unnecessary vibration when cutting unit is operated.

1. Line up holes in yoke and input shaft of gear box. Slide yoke onto shaft (Fig. 13) and secure parts together with a roll pin (3/16 x 1-1/2 in.) (38 mm). Tighten (2) capscrews and locknuts securing yoke to input shaft.

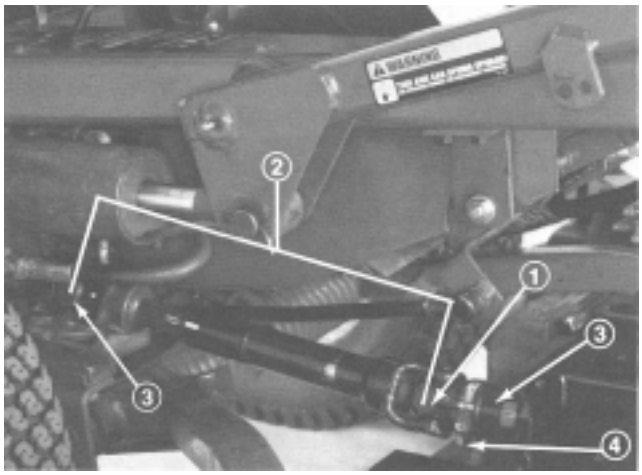

Figure 13

1. PTO yoke
2. Yokes in phase
3. Roll pin
3. Capscrews & locknuts

2. Mount PTO shield over input shaft and onto gear box mounting plate with two self-tapping screws (Fig. 14).

3. Attach lift chains to lift arm and cutting unit (Fig. 14) with six shackles, shackle pins (3/8 x 1 – 1/2 in.) (38 mm) and cotter pins (1/8 x 3/4 in.) (19 mm). Adjust chain length so both become tight at the same time when lifting lift arm.

3. Connect ends of tension spring between fourth link of rear chain and eye of cotter pin that holds cylinder pin in place (Fig. 14). Adjust length of chain so rear caster wheels are off the ground in transport position.

SET – UP INSTRUCTIONS

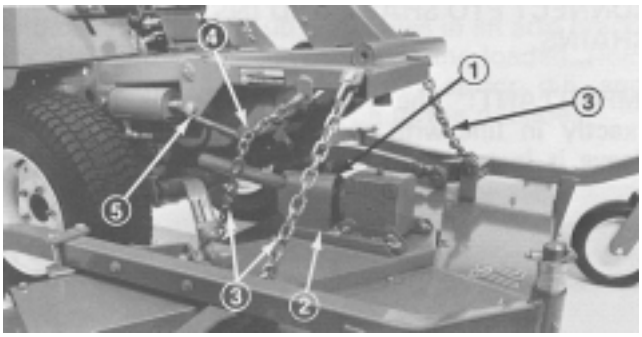

Figure 14

1. PTO shield
2. Self-tapping screws
3. Lift chain
4. Spring in 4th link
5. Spring in cotter pin

GREASE CUTTING UNIT

Before the cutting unit is operated, it must be greased to assure proper lubricating characteristics: refer to Lubrication, page 12. Failure to grease the machine will result in premature failure of critical parts.

INSTALL REAR WEIGHT

Two Wheel Drive Groundsmaster 300 Series Traction Units comply with ANSI B71.4 – 1990 Standard when equipped with rear weight. Use chart below to determine combinations of weight required. Order parts from your local Authorized Toro Distributor.

Four Wheel Drive Groundsmaster 300 Series Traction Units do not need additional rear weight to comply with ANSI B71.4 – 1990 Standard.

Traction Unit Description	Rear Weight Required	Weight Part Number	Weight Description	Qty.
Groundsmaster 325 – D (30788 / 30739)	70 lb.	24 – 5780	Rear Weight Kit (includes two 35 lb. weights and mounting hardware)	1
Groundsmaster 345 (30789)	105 lb.	24 – 5780	Rear Weight Kit (includes two 35 lb. weights and mounting hardware) &	1
		24 – 5790	Rear Weight Kit (includes one 35 lb. weight and mounting hardware)	1
Groundsmaster 325 – D 4 Wheel Drive (30795 / 30741)	0 lb.	–	–	–

BEFORE OPERATING

CHECK LUBRICANT IN GEAR BOX

The gear box in designed to operate on SAE 80 – 90 wt. gear lube. Although the gear box is shipped with lubricant from the factory, check the level before operating the cutting unit.

1. Position machine and cutting unit on a level surface. Lower cutting unit onto level surface.

2. Remove check plug from side of gear box (Fig. 15) and make sure lubricant is up to bottom of hole. If level of lubricant is low, remove fill plug on top of gear case and add enough lubricant to bring it up to bottom of hole in side.

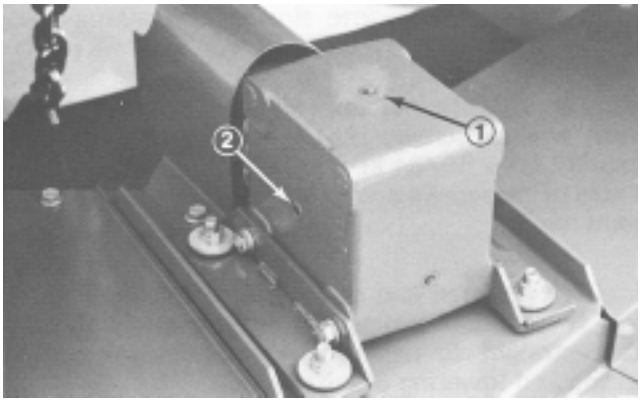

Figure 15

1. Filler Plug
2. Check Plug

ADJUSTING HEIGHT-OF-CUT

The height-of-cut is adjustable from 1 to 4 inches (25 to 102 mm) in 1/2 inch (13 mm) increments, by adding or removing an equal number of spacers on the front and rear caster forks. The height-of-cut chart below gives the combinations of spacers to use for all height-of-cut settings.

Note: 1/4 inch (6 mm) spacers are available and can be ordered from your Toro distributor by Toro Part No. 27-1040. (Quantity – 8).

Height-of-Cut Chart

Height-of-Cut Setting	Spacers Below Castor Arm	
	Front	Rear
1 (25 mm)	0	0
1-1/2 (38 mm)	1	1
2 (51 mm)	2	2
2-1/2 (64 mm)	3	3
3 (76 mm)	4	4
3-1/2 (89 mm)	5	5
4 (102 mm)	6	6

Note: A more optimum cutting appearance of the turf can be achieved in the lower heights-of-cut by lowering the rear of the cutting unit. Accomplish this by relocating the rear caster wheel axles in the upper hole of the caster forks (Fig. 17). Replace the axles into the lower caster fork holes for higher height-of-cut settings where optimum cutting appearance is not required.

IMPORTANT: Do not attempt to cut off more than one inch (25 mm) of the grass blades in the one (1) inch (25 mm) height-of-cut setting with the rear of the cutting unit lowered, as this may cause the engine to labor excessively.

1. Start the engine and raise cutting unit so front caster height-of-cut can be changed. Stop engine after cutting unit is raised. Rear caster height-of-cut can be changed with cutting unit lowered.

2. Squeeze back of wire and rotate wire on lynch pin. Pull pin out of caster spindle. Slide spacers onto the caster spindle to get desired height-of-cut (Fig. 16 and 17). Then slide washer (Fig. 16 and 17) onto spindle.

2. Push castor spindle through caster arm. Slide any remaining spacers onto spindle (Fig. 16 and 17). Install lynch pin to retain parts in place.

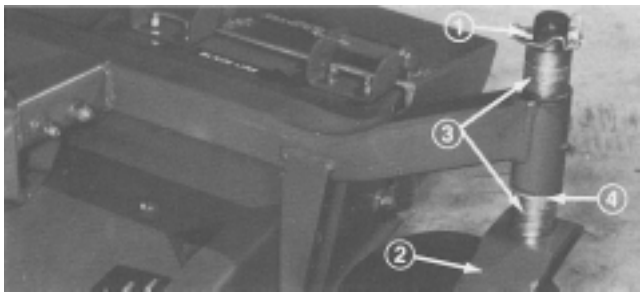

Figure 16

1. Lynch pin
2. Large (front) caster
3. Spacers
4. Washer

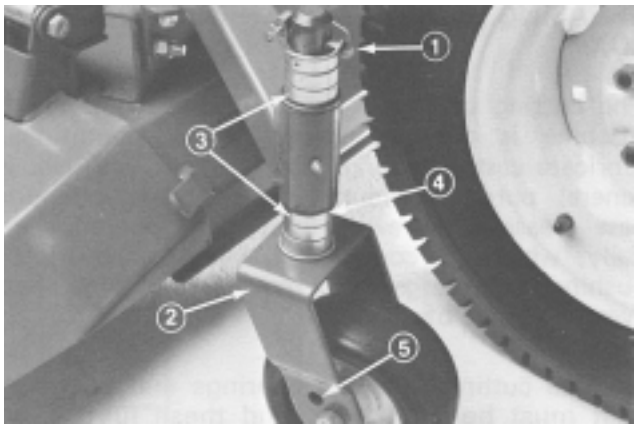

Figure 17

1. Lynch pin
2. Small (rear) caster
3. Spacers
4. Washer
5. For 1 in. (25 mm) H.O.C. only

Note: When cutting unit is used in 1 in. (25 mm) or 1-1/2 in. (38 mm) height-of-cut setting, front and rear rollers must be positioned in the upper bracket holes.

GRASS DEFLECTOR

WARNING

The grass deflector (Fig. 18) is a safety device that diverts grass and other foreign objects being discharged downwardly. WE STRONGLY RECOMMEND THAT THE DEFLECTOR BE IN ITS NORMAL OPERATING POSITION WHENEVER THE CUTTING UNIT IS ENGAGED. NEVER OPERATE CUTTING UNIT WITH THE DEFLECTOR REMOVED FROM THE CUTTING UNIT OR TIED/BLOCKED IN A RAISED POSITION, SINCE THE BLADES COULD THEN THROW DEBRIS A CONSIDERABLE DISTANCE WITH SUFFICIENT FORCE TO CAUSE PERSONAL INJURY OR DAMAGE TO PROPERTY. If the grass deflector is damaged, repair or replace the affected part(s).

Note: The deflector is spring loaded into its downward normal operating position, but the operator can temporarily swing it out of the way to facilitate loading in a trailer or when otherwise necessary.

Figure 18

1. Deflector in lowest position

CAUTION: This product may exceed noise levels of 85 dB(A) at the operator position. Ear protectors are recommended, for prolonged exposure, to reduce the potential of permanent hearing loss.

LUBRICATION MAINTENANCE

GREASE BEARINGS, BUSHINGS AND GEAR BOX

The cutting unit must be lubricated regularly. If machine is operated under normal conditions, lubricate caster bearings and bushings with No. 2 general purpose lithium base grease or molybdenum base grease, after every 8 hours of operation or daily, whichever comes first. All other bearings, bushings and the gear box must be lubricated after every 50 hours of operation.

1. The cutting unit has bearings and bushings that must be lubricated, and these lubrication points are: caster spindle bushings (Fig. 19 and 20); caster wheel bearings (Fig. 20 & 21); blade spindle bearings (Fig. 22); right and left push arm ball joints (Fig. 22).

2. Lower cutting unit so caster wheels are on a level surface. Remove check plug (Fig. 23) from side of gear box and check level of lubricant. If level of lubricant is low, remove fill plug on top of gear box and add SAE 80 – 90 wt. gear lube until level is up to bottom of check hole.

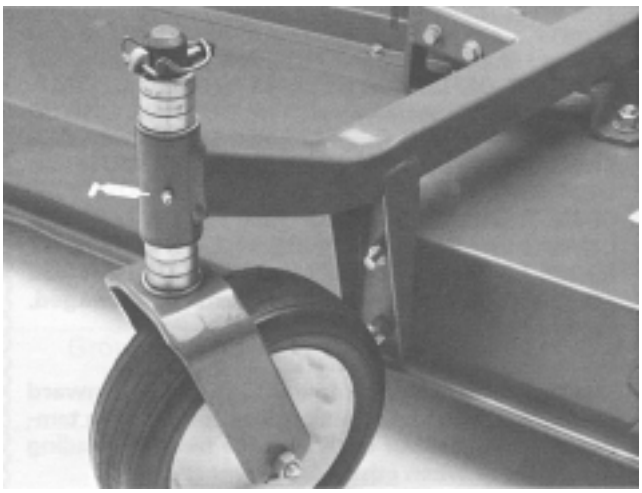

Figure 19

Figure 20

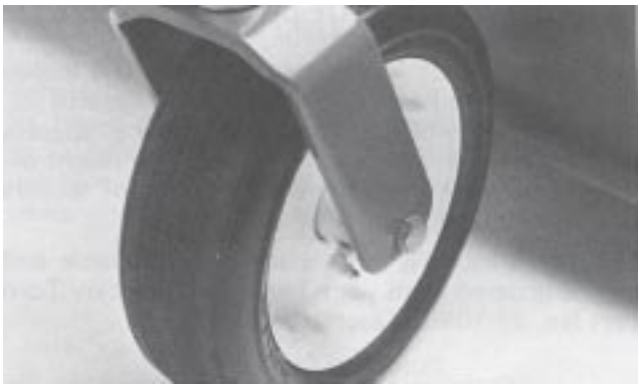

Figure 21

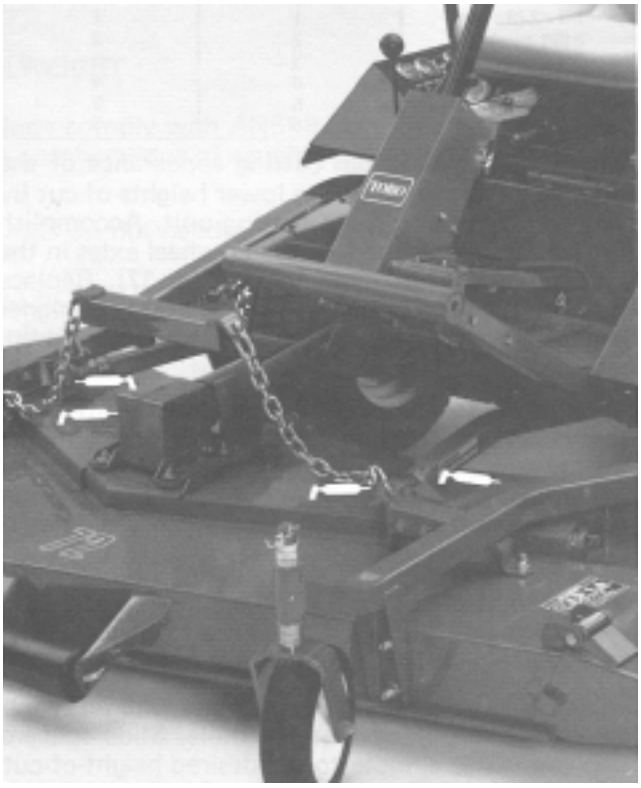

Figure 22

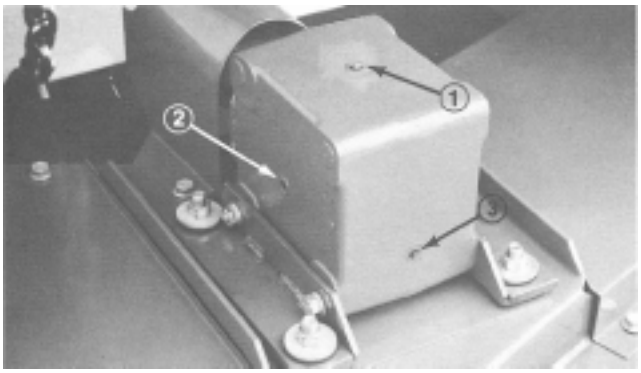

Figure 23

1. Filler Plug
2. Check Plug
3. Drain Plug

CUTTING UNIT MAINTENANCE TROUBLESHOOTING

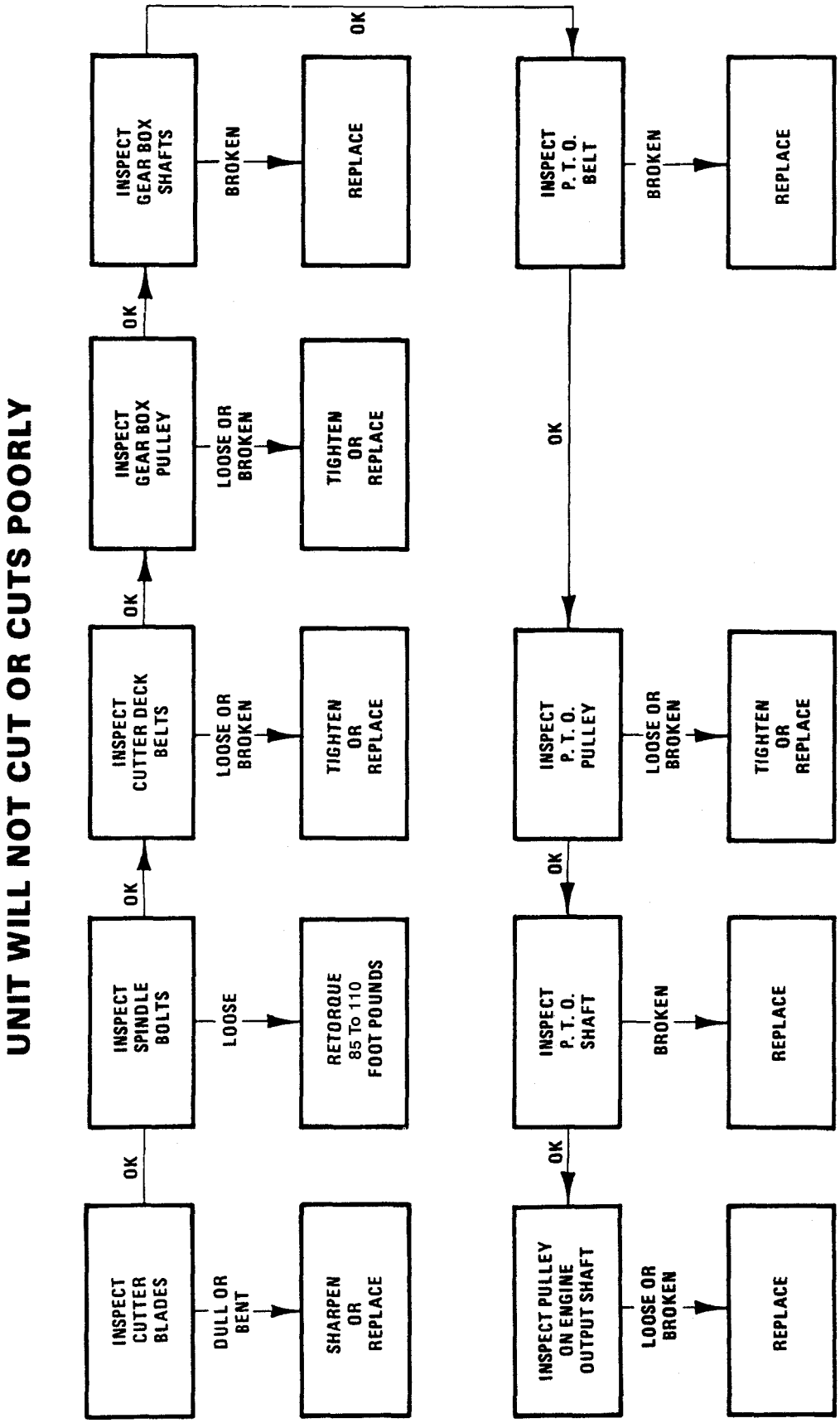

CUTTING UNIT MAINTENANCE

SEPARATING CUTTING UNIT FROM TRACTION UNIT

1. Position machine on level surface, lower cutting unit to the shop floor, shut engine off and engage parking brake.

2. Remove self-tapping screws securing shield to top of cutting unit and set shield aside.

3. Drive roll pin out of yoke and input shaft of gear box (Fig. 24). Also, loosen capscrews and locknuts. Slide yoke off the input shaft. If traction unit will be used without the cutting unit, drive roll pin out of yoke at PTO pivot shaft and remove entire universal shaft from traction unit.

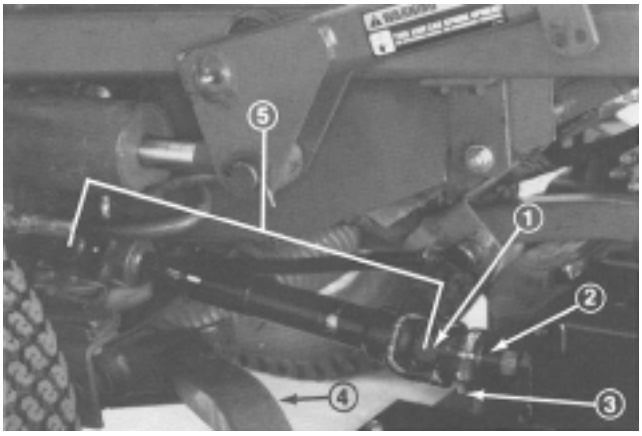

Figure 24

1. PTO yoke
2. Roll pin
3. Capscrews & locknuts
4. R.H. push arm
5. Yokes in phase

DANGER

Do not start the engine and engage the PTO lever when PTO shaft is not connected to gear box on cutting unit. If engine is started and PTO shaft is allowed to rotate, serious injury could result.

4. Disconnect spring from lift cylinder cotter pin. Remove cotter pins and clevis pins securing lift chains to lift arm.

WARNING

Since the right hand push arm is spring-loaded to about 100 pounds (445 N) and the left hand push arm is spring-loaded to about 150 pounds (667 N), a helper is needed to release push arms from cutting unit. Sudden release of the push arms could cause injury.

5. Have a helper push down on the right push arm while you remove the capscrews, flatwashers, lockwashers and nuts securing ball joint mount to caster arm on cutting unit (Fig. 24). Now the helper can carefully allow push arm to move upward, which will gradually release the 100 pounds (445 N) of spring load.

6. Have a helper push down on the left push arm while you remove the capscrews, flatwashers, lockwashers and nuts securing ball joint mount to mount bracket on cutting unit (Fig. 25). Now the helper can carefully allow push arm to move upward, which will gradually release the 150 pounds (667 N) of spring load.

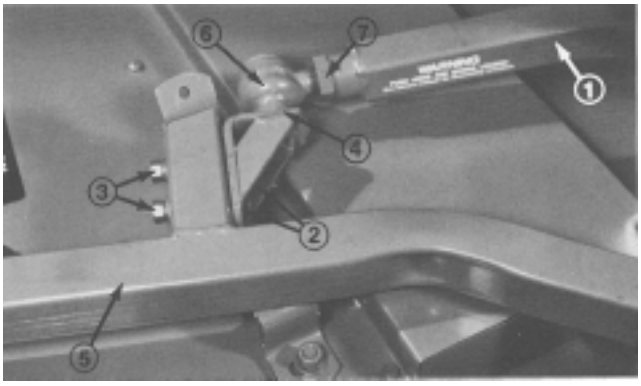

Figure 25

1. L.H. push arm
2. Capscrew and flatwasher
3. Flange locknut
4. Ball joint mount
5. Caster arm
6. Ball joint
7. Jam nut

7. Roll the cutting unit away from the traction unit.

MOUNTING CUTTING UNIT TO TRACTION UNIT

1. Position machine on level surface and shut engine off.

2. Move cutting unit into position in front of traction unit.

WARNING

Since the right hand push arm is spring-loaded to about 100 pounds (445 N) and left hand push arm is spring-loaded to about 150 pounds (667 N), a helper is needed to push the arm down. Sudden release of the push arm could cause injury.

3. Slide a large flatwasher (1/2 I.D. x 1-1/4 in. (32 mm) O.D.) onto both capscrews (7/16-14 x 3 in.) (76 mm).

4. Have a helper carefully push down on right hand push arm until holes in ball joint mount line up with holes in caster arm. Secure ball joint mount to caster arm with two capscrews w/large flatwashers, one flatwasher (15/32 I.D. x 59/64 in. (23.4 mm) O.D.), two lockwashers and nuts (7/16-14). Heads of capscrews and large flatwashers must be on outside of caster arm.

5. Slide flatwashers (15/32 I.D. x 59/64 in. (23.4 mm) O.D.) onto two capscrews (7/16-14 x 3 in.) (76 mm).

6. Have a helper carefully push down on left hand push arm until holes in ball joint mount are in line with holes in mount bracket on cutting unit. Immediately slide 4 x 4 in. (102 x 102 mm) block of wood between top of push arm and underside of chassis

WARNING

Make sure wooden block does not slip out accidentally.

7. Secure ball joint mount to mount bracket with two capscrews, flatwashers, and flange locknuts (7/16-14). Head of capscrews and flatwashers must contact ball joint mount.

8. Connect PTO shaft to gear box with roll pin and (2) capscrews and nuts, install shield and connect lift chains to lift arm: refer to Connect PTO Shaft and Install Lift Chains, page 10.

REPLACING BLADE DRIVE BELTS

1. Lower cutting unit to the shop floor. Remove covers on top of cutting unit and set covers aside. Loosen idler pulleys to release tension of belts.

2. Remove carriage bolts, lockwashers and nuts holding gear box in place. Lift gear box off mounting plate and lay it on top of cutting unit.

3. Remove belts from spindle pulleys.

4. Mount a belt on lower pulley groove of left spindle, slide belt under belt idler mount plate and install around center spindle pulley. Tension belt by levering idler pulley against belt and tighten idler pulley flange nut (Fig. 26).

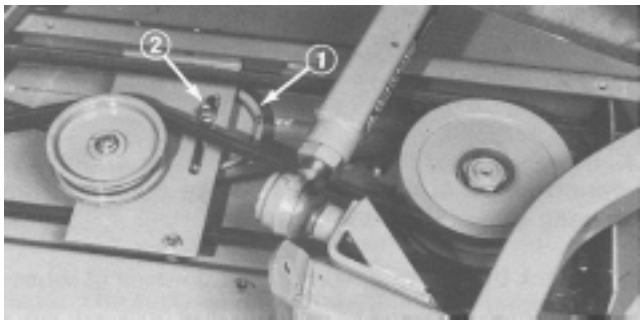

Figure 26
1. Lower belt idler
2. Flange nut

5. Place the right spindle belt under the gear box mount plate and the opposite end on top of the right spindle pulley. Place the left spindle belt under the gear box mount plate and the opposite end on top of the left spindle pulley. Mount the gear box and loop the belts around the gear box pulley.

6. Feed the right and left spindle belts over the pulleys by rotating the cutter blades. Tighten the gear box mounting fasteners.

7. Tension idler pulleys against both belts. Install covers on top of cutting unit.

SERVICING BUSHINGS IN CASTER ARMS

The caster arms have bushings pressed into the top and bottom portion of the tube and after many hours of operation, the bushings will wear. To check the bushings, move caster fork back and forth and from side-to-side. If caster spindle is loose inside the bushings, bushings are worn and must be replaced.

1. Raise cutting unit and block it so it cannot fall accidentally.

2. Remove lynch pin and spacers from top of caster spindle.

3. Pull castor spindle out of mounting tube. Allow spacer(s) and thrust washer to remain on bottom of spindle to assure same height-of-cut when caster spindle is reinstalled.

4. Insert pin punch into top or bottom of mounting tube and drive bushing out of tube (Fig. 27). Also drive other bushing out of tube. Clean inside of tubes to remove dirt.

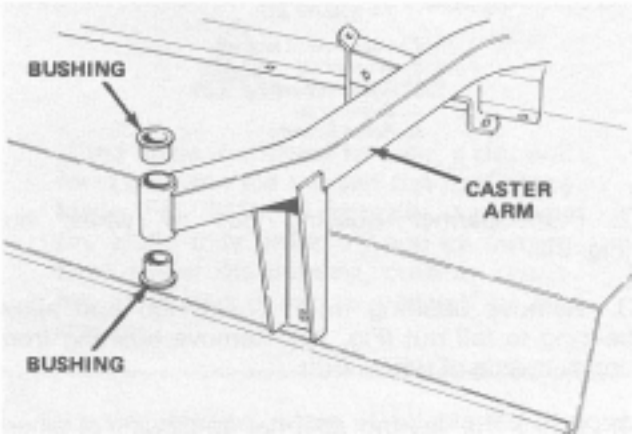

Figure 27

5. Apply grease to inside and outside of new bushings. Using a hammer and flat plate, drive bushings into mounting tube.

6. Inspect caster spindle for wear and replace it if damaged.

7. Push caster spindle through bushings and mounting tube. Slide spacers onto spindle. Install lynch pin through caster spindle to retain all parts in place.

SERVICING REAR CASTER WHEEL AND BEARING

The rear caster wheels rotate on high-quality roller bearings which are supported by spanner bushings. Even after many hours of use, provided that the bearing was kept well-lubricated, bearing wear will be minimal. However, failure to keep bearings lubricated will cause rapid wear. A wobbly caster wheel usually indicates a worn bearing.

1. Remove capscrew and locknut holding caster wheel and (2) washers between caster fork (Fig. 28).

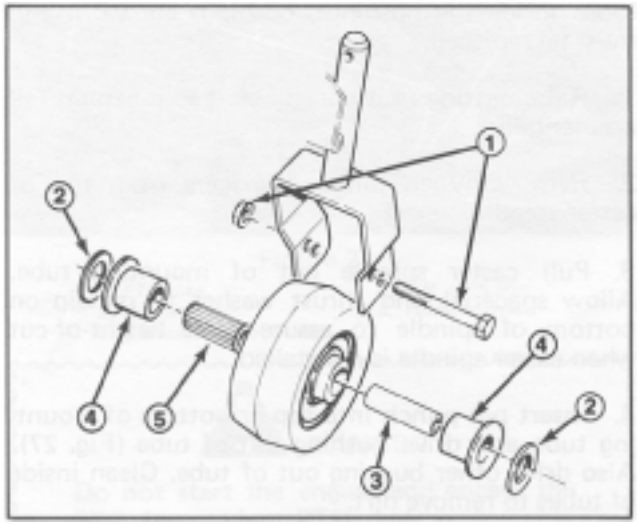

Figure 28

1. Capscrew & locknut
2. Washer (2)
3. Spanner bushing
4. Bushing (2)
5. Roller Bearing

2. Pull spanner bushing out of wheel hub (Fig. 28).

3. Remove bushing from wheel hub and allow bearing to fall out (Fig. 28). Remove bushing from opposite side of wheel hub.

4. Check the bearing, spanner and inside of wheel hub for wear. Replace defective parts.

5. To assemble the caster wheel, push bushing into wheel hub. Slide bearing into wheel hub. Push other bushing into open end of wheel hub to captivate the bearing inside the wheel hub.

6. Carefully slide spanner through the bushings and wheel hub.

7. Install caster wheel assembly and (2) washers between caster fork, and secure all parts in place with capscrew and locknut.

8. Lubricate caster wheel bearing through grease fitting, using No. 2 general purpose lithium grease.

SERVICING FRONT WHEEL CASTER BEARING

The front caster wheels rotate on high-quality roller bearings which are supported by spanner bushings. Even after many hours of use, provided that the bearing was kept well-lubricated, bearing wear will be minimal. However, failure to keep bearings lubricated will cause rapid wear. A wobbly caster wheel usually indicates a worn bearing.

1. Remove capscrew and locknut holding caster wheel and (2) washers between caster fork (Fig. 29).

2. Pull spanner bushing out of wheel hub (Fig. 29).

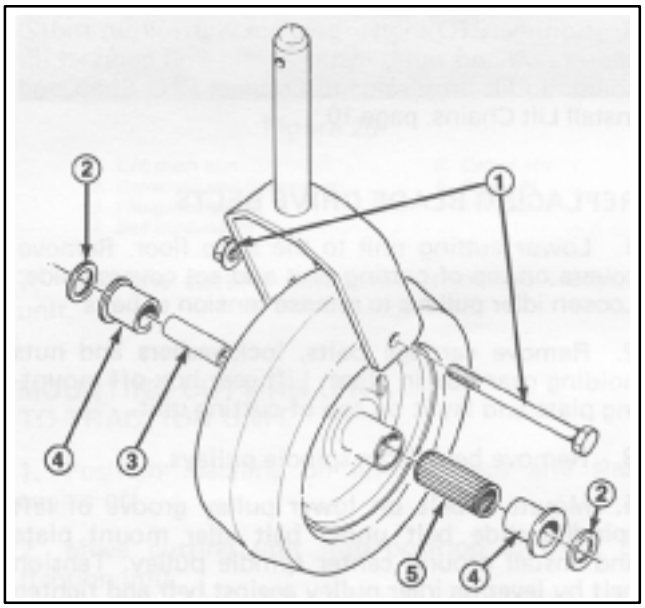

Figure 29

1. Capscrew & locknut
2. Washer (2)
3. Spanner bushing
4. Bushing (2)
5. Roller Bearing

3. Remove bushing from wheel hub and allow bearing to fall out (Fig. 29). Remove bushing from opposite side of wheel hub.

4. Check the bearing, spanner and inside of wheel hub for wear. Replace defective parts.

5. To assemble the caster wheel, push bushing into wheel hub. Slide bearing into wheel hub. Push other bushing into open end of wheel hub to captivate the bearing inside the wheel hub.

6. Carefully slide spanner through the bushings and wheel hub.

7. Install caster wheel assembly and (2) washers between caster fork, and secure all parts in place with capscrew and locknut.

8. Lubricate caster wheel bearing through grease fitting, using No. 2 general purpose lithium grease.

REMOVING CUTTER BLADE

The blade must be replaced if a solid object is hit, the blade is out-of-balance, worn or bent. Always use genuine TORO replacement blades to ensure safety and optimum performance. Never use blades made by other manufacturers because they could be dangerous.

CAUTION

Do not try to straighten a blade that is bent, and never weld a broken or cracked blade. Always use a new TORO blade to assure continued safety certification of the product.

1. Raise cutting unit to highest position, shut the engine off and engage parking brake. Block cutting unit to prevent it from falling accidentally.

2. Grasp end of blade using a rag or thickly padded glove. Remove special screw, belleville washer and blade from spindle assembly (Fig. 30).

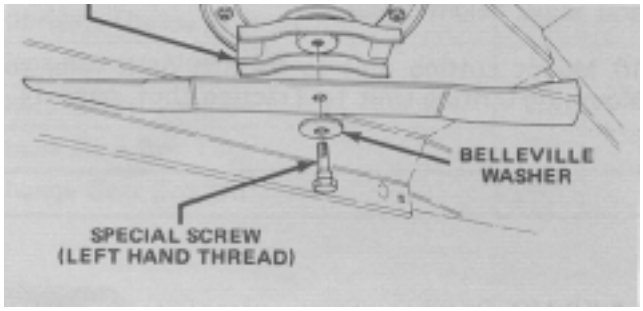

Figure 30

Note: The special screw has left hand thread.

3. To install the blade, assemble parts in reverse order, and make sure the blade sail is facing up.

Tighten special screw to 75 to 100 ft-lb (102 to 136 N·m).

INSPECTING AND SHARPENING BLADE

1. Raise cutting unit to highest position, shut the engine off and engage parking brake. Block cutting unit to prevent it from falling accidentally.

2. Examine cutting ends of the blade carefully, especially where the flat and curved parts of the blade meet (Fig. 31A). Since sand and abrasive material can wear away the metal that connects the flat and curved parts of the blade, check the blade before using the machine. If wear is noticed (Fig. 31B), replace the blade: refer to Removing Cutter Blade, page 17.

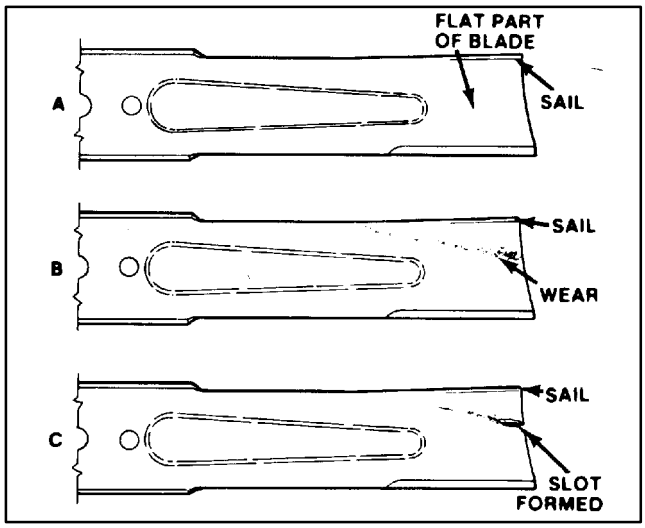

Figure 31

WARNING

If the blade is allowed to wear, a slot will form between the sail and flat part of the blade (Fig. 31C). Eventually, a piece of the blade may break off and be thrown from under the housing, possibly resulting in serious injury to yourself or bystander.

2. Examine cutting edges of all blades. Sharpen the cutting edges if they are dull or nicked. Sharpen only the top side of the cutting edge and maintain the original cutting angle to assure sharpness (Fig. 32). The blade will remain balanced if same amount of metal is removed from both cutting edges.

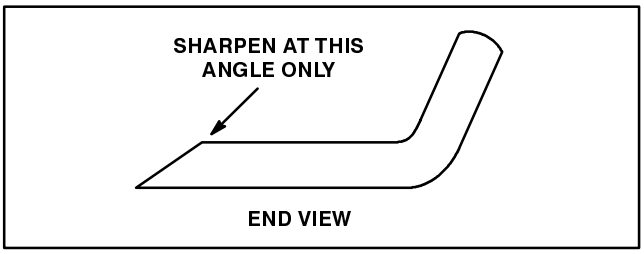

Figure 32

4. To check blade for being straight and parallel, lay blade on level surface and check its ends. Ends of blade must be slightly lower than the center, and cutting edge must be lower than heel of the blade. This blade will produce good quality-of-cut and require minimal power from the engine. By contrast, a blade that is higher at the ends than the center, or cutting edge higher than the heel of the blade is warped or bent and must be replaced.

5. To install the blade, assemble parts in reverse order, and make sure the blade sail is facing up. Tighten special screw to 75 – 100 ft-lb (102 to 136 N·m).

CHECKING AND CORRECTING MISMATCH OF BLADES

If there is mismatch between the blades, the grass will appear streaked when it is cut. This problem can be corrected by making sure the blades are straight and all blades are cutting on the same plane.

1. Using a 3 foot (0.914 m) long carpenters level, find a flat surface on the shop floor.

2. Set rear caster wheels in the upper hole of caster forks and adjust height-of-cut so all six height-of-cut spacers are below the caster arm.

3. Lower cutting unit onto flat surface. Remove covers from top of cutting unit. Loosen idler pulleys to release tension against all three belts.

4. Rotate blades until the ends face forward and backward. Measure from floor to front tip of cutting edge and remember this dimension. Then rotate same blade so opposite end is forward and measure again. The difference between dimensions must not exceed 1/8 inch (3 mm). If difference exceeds 1/8 inch (3 mm), replace the blade because it is bent. Make sure to measure all three blades.

5. Compare measurements of outer blades with the center blade. Center blade must not be more than 3/8 inch (10 mm) lower than outer blades. If center blade is more than 3/8 inch (10 mm) lower than outer blades, proceed to step 7 and add shims between spindle housing and bottom of cutting unit.

6. Rotate blades so tips line up with one another. Tips of the adjacent blades must be within 1/8 inch (3 mm) of each other. If tips are not within 1/8 inch (3 mm) of each other, proceed to step 7 and add shims between spindle housing and bottom of cutting unit.

7. Remove capscrews, flatwashers, lockwashers and nuts from outer spindle, in the area where shims must be added. To raise or lower the blade, add a shim, Part No. 3256-24, between spindle housing and bottom of cutting unit. Continue to check alignment of blade and add shims until tips of blades are within the required dimension.

IMPORTANT: Do not use more than three shims at any one hole location. Use decreasing numbers of shims in adjacent holes if more than one shim is added to any one hole location.

8. Tension idler pulleys against all three belts. Also install covers to top of cutting unit.

9. Set rear caster wheels in lower holes in caster forks if height-of-cut is above one (1) inch (25 mm) and adjust height-of-cut.

10. Mount cutting unit to traction unit: refer to Mounting Cutting Unit To Traction Unit, page 14.

IDENTIFICATION AND ORDERING

MODEL AND SERIAL NUMBERS

The cutting unit has two identification numbers: a model number and a serial number. The two numbers are stamped into a plate. The cutting unit identification plate is located just ahead of the left rear caster wheel (Fig. 33). In any correspondence concerning the cutting unit, supply the model and serial numbers to assure correct information and replacement parts are obtained.

To order replacement parts from an authorized TORO Distributor, supply the following information:

1. Model and serial numbers of the cutting unit.

2. Part number, description and quantity of parts desired.

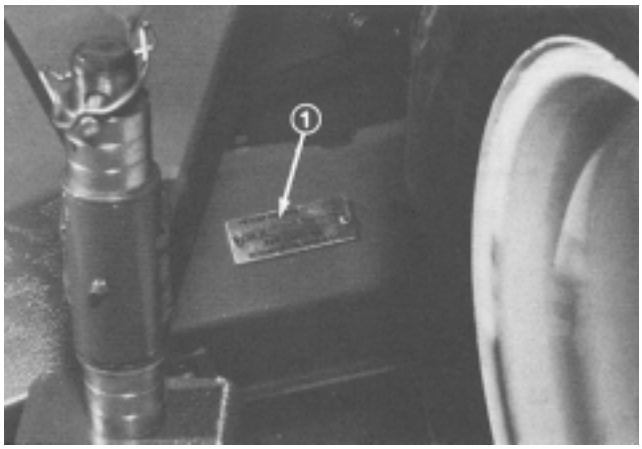

Figure 33
1. Cutting unit model and serial number

Note: Do not order by reference number if a parts catalog is being used; use the part number.

SERVICE INTERVAL CHART

Date									
Hour Meter Reading									
Service Interval	↓	Daily	10	50	100	150	200	250	300
Check Blades	Daily								
Lubricate Caster Arm Bushings	Daily								
Lubricate Caster Wheel Bearings	Daily								
Tighten Castor Wheel Nuts (Tighten after 2 & 10 hrs. initially)	50								
Torque Blade Bolts (Tighten after 10 hrs. initially)	50								
Lubricate Grease Fittings	50								
Clean Cutting Unit	50								
Check Blade Drive Belts	50								
Check Gear Box Oil	50								
Change Gear Box Oil	250								

SERVICE SPECIFICATIONS:

Cutting Unit Gear Box Oil — 80-90 wt. Gear Lube

The Toro Promise

A One Year Limited Warranty

The Toro Company promises to repair your TORO product if defective in materials or workmanship. The following time periods from the date of purchase apply:

Commercial Products ..... 1 Year

The cost of parts and labor are included, but the customer pays the transportation costs on walk rotary mowers with cutting unit widths of less than 25".

If you feel your TORO Product is defective and wish to rely on The Toro Promise, the following procedure is recommended:

1. Contact your Authorized TORO Distributor or Commercial Dealer (the Yellow Pages of your telephone directory is a good reference source).

2. The TORO Distributor or Commercial Dealer will advise you on the arrangements that can be made to inspect and repair your product.

3. The TORO Distributor or Commercial Dealer will inspect the product and advise you whether the product is defective and, if so, make all repairs necessary to correct the defect without an extra charge to you.

If for any reason you are dissatisfied with the distributor's analysis of the defect or the service performed, you may contact us.

Write:

TORO Commercial Products Service Department
8111 Lyndale Avenue South
Minneapolis, MN 55420

The above remedy of product defects through repair by an Authorized TORO Distributor or Commercial Dealer is the purchaser's sole remedy for any defect.

THERE IS NO OTHER EXPRESS WARRANTY. ALL IMPLIED WARRANTIES OF MERCHANTIBILITY AND FITNESS FOR USE ARE LIMITED TO THE DURATION OF THE EXPRESS WARRANTY.

Some states do not allow limitations on how long an implied warranty lasts, so the above limitation may not apply to you.

This Warranty applies only to parts or components which are defective and does not cover repairs necessary due to normal wear, misuse, accidents, or lack of proper maintenance. Regular, routine maintenance of the unit to keep it in proper operating condition is the responsibility of the owner.

All warranty repairs reimbursable under The Toro Promise must be performed by an Authorized Toro Commercial Dealer or Distributor using Toro approved replacement parts.

Repairs or attempted repairs by anyone other than an Authorized TORO Distributor or Commercial Dealer are not reimbursable under the TORO Promise. In addition, these unauthorized repair attempts may result in additional malfunctions, the correction of which is not covered by warranty.

THE TORO COMPANY IS NOT LIABLE FOR INDIRECT, INCIDENTAL OR CONSEQUENTIAL DAMAGES IN CONNECTION WITH THE USE OF THE PRODUCT INCLUDING ANY COST OR EXPENSE OF PROVIDING SUBSTITUTE EQUIPMENT OR SERVICE DURING PERIODS OF MALFUNCTION OR NON–USE.

Some states do not allow the exclusion of incidental or consequential damages, so the above exclusion may not apply to you.

This warranty gives you specific legal rights, and you may also have other rights which vary from state to state.

COUNTRIES OTHER THAN THE UNITED STATES OR CANADA

Customers who have purchased TORO products exported from the United States or Canada should contact their TORO Distributor (Dealer) to obtain guarantee policies for your country, province, or state. If for any reason you are dissatisfied with your Distributor's service or have difficulty obtaining guarantee information, contact the TORO importer. If all other remedies fail, you may contact us at The Toro Company.

Compliance with Radio Interference Regulations Certified.