Form No. 3368-984 Rev D

TORO®

Count on it.

Operator's Manual

Reelmaster® 7000-D 4-Wheel Drive Traction Unit

Model No. 03708—Serial No. 311000001 and Up

CE

To register your product or download an *Operator's Manual* or *Parts Catalog* at no charge, go to www.Toro.com.

Original Instructions (EN)

This product complies with all relevant European directives, for details please see the separate product specific Declaration of Conformity (DOC) sheet.

WARNING

CALIFORNIA
Proposition 65 Warning

Diesel engine exhaust and some of its constituents are known to the State of California to cause cancer, birth defects, and other reproductive harm.

Because in some areas there are local, state, or federal regulations requiring that a spark arrester be used on the engine of this machine, a spark arrester is incorporated with the muffler assembly.

Genuine Toro spark arresters are approved by the USDA Forestry Service.

Important: This engine is equipped with a spark arrester muffler. It is a violation of California Public Resource Code Section 4442 to use or operate the engine on any forest-covered, brush-covered, or grass-covered land without a spark arrester muffler maintained in working order, or the engine constricted, equipped, and maintained for the prevention of fire. Other states or federal areas may have similar laws.

The enclosed *Engine Owner's Manual* is supplied for information regarding the US Environmental Protection Agency (EPA) and the California Emission Control Regulation of emission systems, maintenance, and warranty. Replacements may be ordered through the engine manufacturer.

Introduction

This machine is a ride-on, reel-blade lawn mower intended to be used by professional, hired operators in commercial applications. It is primarily designed for cutting grass on well-maintained lawns in golf courses, parks, sports fields, and on commercial grounds. It is not designed for cutting brush, mowing grass and other growth alongside highways, or for agricultural uses.

Read this information carefully to learn how to operate and maintain your product properly and to avoid injury and product damage. You are responsible for operating the product properly and safely.

You may contact Toro directly at www.Toro.com for product and accessory information, help finding a dealer, or to register your product.

Whenever you need service, genuine Toro parts, or additional information, contact an Authorized Service Dealer or Toro Customer Service and have the model and serial numbers of your product ready. Figure 1 identifies the location of the model and serial numbers on the right front frame member of the product. Write the numbers in the space provided.

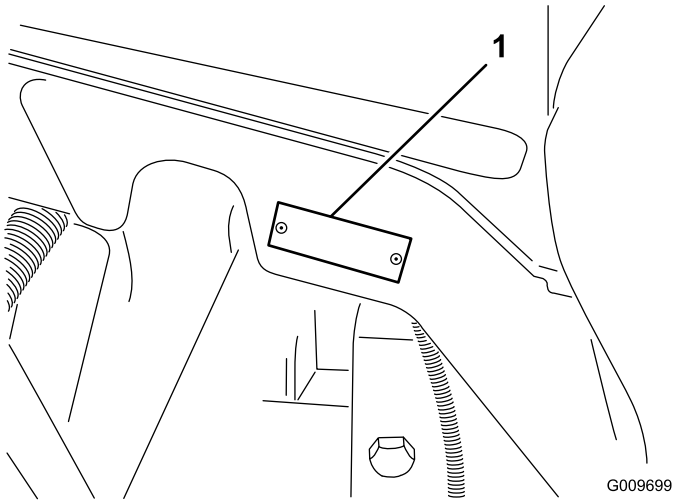

Figure 1

1. Model and serial number location

Model No. _____

Serial No. _____

This manual identifies potential hazards and has safety messages identified by the safety alert symbol (Figure 2), which signals a hazard that may cause serious injury or death if you do not follow the recommended precautions.



Figure 2

1. Safety alert symbol.

This manual uses two other words to highlight information. **Important** calls attention to special mechanical information and **Note** emphasizes general information worthy of special attention.

© 2012—The Toro® Company
8111 Lyndale Avenue South
Bloomington, MN 55420

Contact us at www.Toro.com.
Printed in the USA.
All Rights Reserved

Contents

Introduction 2
Safety 4
- Safe Operating Practices 4
- Toro Riding Mower Safety 6
- Sound Power Level 7
- Sound Pressure Level 7
- Vibration Level 7
- Safety and Instructional Decals 7

Setup 12
- 1 Replacing the Warning Decal for CE Compliance 13
- 2 Installing the Hood Lock for CE Compliance 13
- 3 Installing the Cutting Units 14
- 4 Adjusting the Turf Compensation Spring 17
- 5 Using the Cutting Unit Kickstand 17
- 6 Greasing the Machine 18
- 7 Checking Fluid Levels 18
- 8 Using the Gauge Bar 19

Product Overview 19
- Controls 19
- Specifications 23
- Traction Unit Specifications 23
- Attachments/Accessories 23

Operation 24
- Checking the Engine Oil Level 24
- Checking the Cooling System 25
- Filling the Fuel Tank 25
- Checking the Hydraulic Fluid Level 27
- Checking the Tire Pressure 28
- Starting and Stopping the Engine 28
- Checking the Interlock Switches 28
- Setting the Reel Speed 29
- Adjusting the Lift Arm Counterbalance 30
- Adjusting the Lift Arm Turn Around Position 30
- Pushing or Towing the Machine 31
- Jacking Points 31
- Tie Downs 31
- Understanding the Diagnostic Light 31
- Diagnostic Ace Display 32
- Checking the Interlock Switches 32
- Operating Characteristics 33
- Engine Cooling Fan Operation 34
- Operating Tips 34

Maintenance 35
- Recommended Maintenance Schedule(s) 35
- Daily Maintenance Checklist 36
- Service Interval Chart 37
- Premaintenance Procedures 38
- Removing the Hood 38

Lubrication 38
- Greasing the Bearings and Bushings 38

Engine Maintenance 40
- Servicing the Air Cleaner 40
- Servicing the Engine Oil and Filter 41
- Adjusting the Throttle 41

Fuel System Maintenance 42
- Fuel Tank 42
- Fuel Lines and Connections 42
- Servicing the Water Separator 42
- Fuel Pick up Tube Screen 42
- Bleeding Air from the Injectors 43

Electrical System Maintenance 43
- Charging and Connecting the Battery 43
- Battery Care 44
- Fuses 45

Drive System Maintenance 46
- Checking the Torque of the Wheel Nuts 46
- Checking the Planetary Gear Drive Oil 46
- Changing the Planetary Gear Drive Oil 46
- Checking the Rear Axle Lubricant 47
- Changing the Rear Axle Lubricant 47
- Adjusting the Traction Drive for Neutral 48
- Checking the Rear Wheel Toe-In 48

Cooling System Maintenance 49
- Servicing the Engine Cooling System 49

Brake Maintenance 50
- Adjusting the Service Brakes 50

Belt Maintenance 50
- Servicing the Alternator Belt 50

Hydraulic System Maintenance 51
- Changing the Hydraulic Fluid 51
- Replacing the Hydraulic Filters 51
- Checking the Hydraulic Lines and Hoses 52

Cutting Unit Maintenance 52
- Backlapping the Cutting Units 52

Cleaning 53
- Servicing the Spark Arrestor Muffler 53

Storage 54
- Engine 54
- Traction Unit 54

Schematics 55

Safety

This machine meets or exceeds CEN standard EN 836:1997 (when appropriate decals applied), and ANSI B71.4-2004 specifications in effect at the time of production.

Improper use or maintenance by the operator or owner can result in injury. To reduce the potential for injury, comply with these safety instructions and always pay attention to the safety alert symbol, which means CAUTION, WARNING, or DANGER- "personal safety instruction." Failure to comply with the instruction may result in personal injury or death.

Safe Operating Practices

The following instructions are from the CEN standard EN 836:1997, ISO standard 5395:1990, and ANSI B71.4-2004.

Training

- Read the operator's manual and other training material carefully. Be familiar with the controls, safety signs, and the proper use of the equipment.
- Never allow children or people unfamiliar with these instructions to use or service the mower. Local regulations may restrict the age of the operator.
- Never mow while people, especially children, or pets are nearby.
- Keep in mind that the operator or user is responsible for accidents or hazards occurring to other people or their property.
- Do not carry passengers.
- All drivers and mechanics should seek and obtain professional and practical instruction. The owner is responsible for training the users. Such instruction should emphasize:
  - the need for care and concentration when working with ride-on machines;
  - control of a ride-on machine sliding on a slope will not be regained by the application of the brake. The main reasons for loss of control are:
    - ◊ insufficient wheel grip;
    - ◊ being driven too fast;
    - ◊ inadequate braking;
    - ◊ the type of machine is unsuitable for its task;
    - ◊ lack of awareness of the effect of ground conditions, especially slopes;
    - ◊ incorrect hitching and load distribution.
- The owner/user can prevent and is responsible for accidents or injuries occurring to himself or herself, other people, or property.

Preparation

- While mowing, always wear substantial footwear, long trousers, hard hat, safety glasses, and ear protection. Long hair, loose clothing, or jewelry may get tangled in moving parts. Do not operate the equipment when barefoot or wearing open sandals.
- Thoroughly inspect the area where the equipment is to be used and remove all objects which may be thrown by the machine.
- **Warning**—Fuel is highly flammable. Take the following precautions:
  - Store fuel in containers specifically designed for this purpose.
  - Refuel outdoors only and do not smoke while refuelling.
  - Add fuel before starting the engine. Never remove the cap of the fuel tank or add fuel while the engine is running or when the engine is hot.
  - If fuel is spilled, do not attempt to start the engine but move the machine away from the area of spillage and avoid creating any source of ignition until fuel vapors have dissipated.
  - Replace all fuel tanks and container caps securely.
- Replace faulty silencers/mufflers.
- Evaluate the terrain to determine what accessories and attachments are needed to properly and safely perform the job. Only use accessories and attachments approved by the manufacturer.
- Check that the operator's presence controls, safety switches and shields are attached and functioning properly. Do not operate unless they are functioning properly.

Operation

- Do not operate the engine in a confined space where dangerous carbon monoxide fumes can collect.
- Mow only in daylight or in good artificial light.
- Before attempting to start the engine, disengage all blade attachment clutches, shift into neutral, and engage the parking brake.
- Remember there is no such thing as a safe slope. Travel on grass slopes requires particular care. To guard against overturning:
  - do not stop or start suddenly when going up or downhill;

  - machine speeds should be kept low on slopes and during tight turns;
  - stay alert for humps and hollows and other hidden hazards;
  - Do not turn sharply. Use care when reversing.
  - Use counterweight(s) or wheel weights when suggested in the operator's manual.
- Stay alert for holes in the terrain and other hidden hazards.
- Watch out for traffic when crossing or near roadways.
- Stop the blades rotating before crossing surfaces other than grass.
- When using any attachments, never direct discharge of material toward bystanders nor allow anyone near the machine while in operation.
- Never operate the machine with damaged guards, shields, or without safety protective devices in place. Be sure all interlocks are attached, adjusted properly, and functioning properly.
- Do not change the engine governor settings or over-speed the engine. Operating the engine at excessive speed may increase the hazard of personal injury.
- Before leaving the operator's position:
  - stop on level ground;
  - disengage the power take-off and lower the attachments;
  - change into neutral and set the parking brake;
  - stop the engine and remove the key.
- Disengage drive to attachments when transporting or not in use.
- Stop the engine and disengage drive to attachment:
  - before refuelling;
  - before making height adjustment unless adjustment can be made from the operator's position.
  - before clearing blockages;
  - before checking, cleaning or working on the mower;
  - after striking a foreign object or if an abnormal vibration occurs. Inspect the mower for damage and make repairs before restarting and operating the equipment.
- Reduce the throttle setting during engine run-out and, if the engine is provided with a shut-off valve, turn the fuel off at the conclusion of mowing.
- Keep hands and feet away from the cutting units.
- Look behind and down before backing up to be sure of a clear path.
- Slow down and use caution when making turns and crossing roads and sidewalks. Stop cylinders/reels if not mowing.
- Do not operate the mower under the influence of alcohol or drugs.
- Lightning can cause severe injury or death. If lightning is seen or thunder is heard in the area, do not operate the machine; seek shelter.
- Use care when loading or unloading the machine into a trailer or truck.
- Use care when approaching blind corners, shrubs, trees, or other objects that may obscure vision.

Maintenance and Storage

- Keep all nuts, bolts and screws tight to be sure the equipment is in safe working condition.
- Never store the equipment with fuel in the tank inside a building where fumes may reach an open flame or spark.
- Allow the engine to cool before storing in any enclosure.
- To reduce the fire hazard, keep the engine, silencer/muffler, battery compartment and fuel storage area free of grass, leaves, or excessive grease.
- Keep all parts in good working condition and all hardware and hydraulic fittings tightened. Replace all worn or damaged parts and decals.
- If the fuel tank has to be drained, do this outdoors.
- Be careful during adjustment of the machine to prevent entrapment of the fingers between moving blades and fixed parts of the machine.
- On multi-cylinder/multi-reel machines, take care as rotating one cylinder/reel can cause other cylinders/reels to rotate.
- Disengage drives, lower the cutting units, set parking brake, stop engine and remove key from ignition. Wait for all movement to stop before adjusting, cleaning or repairing.
- Clean grass and debris from cutting units, drives, silencers/mufflers, and engine to help prevent fires. Clean up oil or fuel spillage.
- Use jack stands to support components when required.
- Carefully release pressure from components with stored energy.
- Disconnect battery before making any repairs. Disconnect the negative terminal first and the

positive last. Reconnect positive first and negative last.

- Use care when checking the cylinders/reels. Wear gloves and use caution when servicing them.
- Keep hands and feet away from moving parts. If possible, do not make adjustments with the engine running.
- Charge batteries in an open well ventilated area, away from spark and flames. Unplug charger before connecting or disconnecting from battery. Wear protective clothing and use insulated tools.

Toro Riding Mower Safety

The following list contains safety information specific to Toro products or other safety information that you must know that is not included in the CEN, ISO, or ANSI standard.

This product is capable of amputating hands and feet and throwing objects. Always follow all safety instructions to avoid serious injury or death.

Use of this product for purposes other than its intended use could prove dangerous to user and bystanders.

⚠ WARNING

Engine exhaust contains carbon monoxide, which is an odorless, deadly poison that can kill you.

Do not run engine indoors or in an enclosed area.

- Know how to stop the engine quickly.
- Do not operate the machine while wearing tennis shoes or sneakers.
- Wearing safety shoes and long pants is advisable and required by some local ordinances and insurance regulations.
- Handle fuel carefully. Wipe up any spills.
- Check the safety interlock switches daily for proper operation. If a switch should fail, replace the switch before operating the machine.
- Before starting the engine, sit on the seat.
- Using the machine demands attention. To prevent loss of control:
  - Do not drive close to sand traps, ditches, creeks, embankments, or other hazards.
  - Reduce speed when making sharp turns. Avoid sudden stops and starts.
  - When near or crossing roads, always yield the right-of-way.
  - Apply the service brakes when going downhill to keep forward speed slow and to maintain control of the machine.
- When operating a machine with ROPS (roll-over protection system) never remove the ROPS and always use the seat belt.
- Raise the cutting units when driving from one work area to another.
- Do not touch the engine, silencer/muffler, or exhaust pipe while the engine is running or soon after it has stopped because these areas could be hot enough to cause burns.
- On any hill, there is the possibility of tipping or rolling over, but the risk increases as the slope angle increases. Steep hills should be avoided.

  Cutting units must be lowered when going down slopes to maintain steering control
- Engage traction drive slowly, always keep foot on traction pedal, especially when traveling downhill.

  Use reverse on traction pedal for braking.
- If the machine stalls when climbing a slope, do not turn the machine around. Always back slowly, straight down the slope.
- When a person or pet appears unexpectedly in or near the mowing area, stop mowing. Careless operation, combined with terrain angles, ricochets, or improperly positioned guards can lead to thrown object injuries. Do not resume mowing until the area is cleared.

Maintenance and Storage

- Make sure all hydraulic line connectors are tight and all hydraulic hoses and lines are in good condition before applying pressure to the system.
- Keep your body and hands away from pin hole leaks or nozzles that eject hydraulic fluid under high pressure. Use paper or cardboard, not your hands, to search for leaks. Hydraulic fluid escaping under pressure can have sufficient force to penetrate the skin and cause serious injury. Seek immediate medical attention if fluid is injected into skin.
- Before disconnecting or performing any work on the hydraulic system, all pressure in the system must be relieved by stopping the engine and lowering the cutting units and attachments to the ground.
- Check all fuel lines for tightness and wear on a regular basis. Tighten or repair them as needed.
- If the engine must be running to perform a maintenance adjustment, keep hands, feet, clothing,

and any parts of the body away from the cutting units, attachments, and any moving parts.

- To ensure safety and accuracy, have an Authorized Toro Distributor check the maximum engine speed with a tachometer.
- If major repairs are ever needed or if assistance is desired, contact an Authorized Toro Distributor.
- Use only Toro-approved attachments and replacement parts. The warranty may be voided if used with unapproved attachments.

Sound Power Level

This unit has a guaranteed sound power level of 101 dBA, which includes an Uncertainty Value (K) of 1 dBA.

Sound power level was determined according to the procedures outlined in ISO 11094.

Sound Pressure Level

This unit has a sound pressure level at the operator's ear of 83 dBA, which includes an Uncertainty Value (K) of 1 dBA.

Sound pressure level was determined according to the procedures outlined in EN 836.

Vibration Level

Hand-Arm

Measured vibration level for right hand =0.3 m/s^2

Measured vibration level for left hand =0.3 m/s^2

Uncertainty Value (K) = 0.16 m/s^2

Measured values were determined according to the procedures outlined in EN 836.

Whole Body

Measured vibration level = 0.2 m/s^2

Uncertainty Value (K) = 0.1 m/s^2

Measured values were determined according to the procedures outlined in EN 836.

Safety and Instructional Decals

Safety decals and instructions are easily visible to the operator and are located near any area of potential danger. Replace any decal that is damaged or lost.

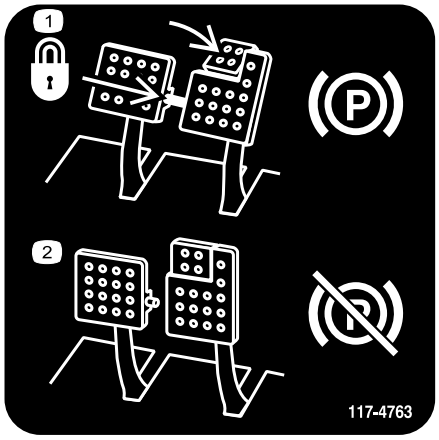

117-4763

1. To engage the parking brake, secure the brake pedals with the locking pin, press the parking brake pedals and engage the toe pedal.
2. To disengage the parking brake, disengage the locking pin and release the pedals.

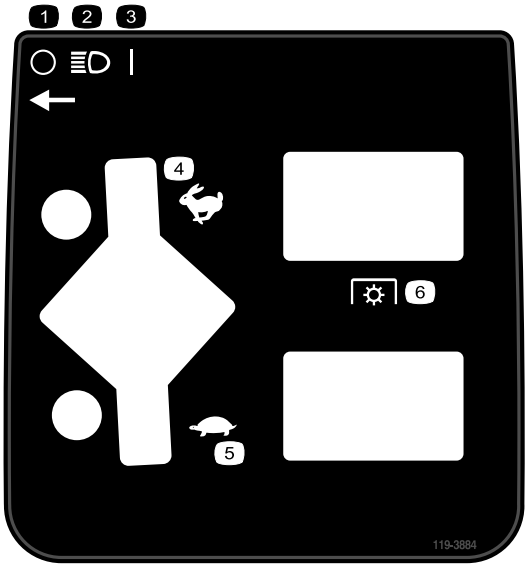

119-3884

1. Off
2. Headlights
3. On
4. Fast, throttle
5. Slow, throttle
6. Power Take-off (PTO)

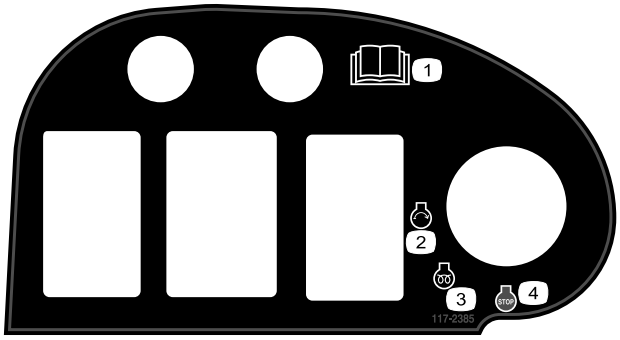

117–2385

1. Read the *Operators Manual*.
2. Engine—start
3. Engine—preheat
4. Engine—stop

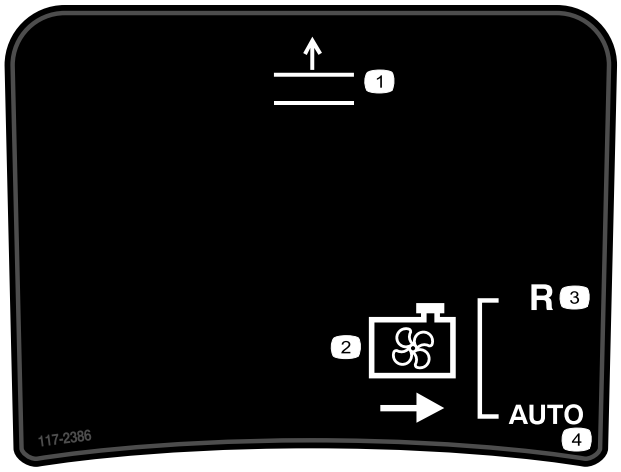

117-2386

1. Raise deck
2. Blow off fan
3. Reverse
4. Automatic

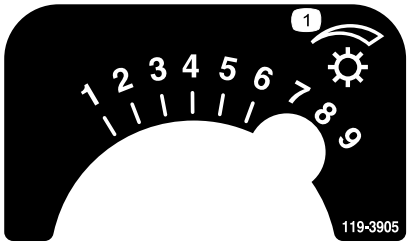

119-3905

1. Reel speed

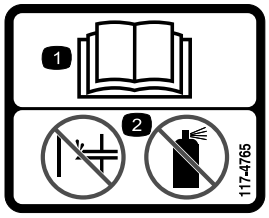

117-4765

1. Read the *Operator's Manual.*
2. Do not use starting aids.

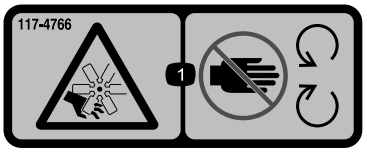

117-4766

1. Cutting/dismemberment hazard; fan—stay away from moving parts.

CALIFORNIA SPARK ARRESTER WARNING

Operation of this equipment may create sparks that can start fires around dry vegetation. A spark arrester may be required. The operator should contact local fire agencies for laws or regulations relating to fire prevention requirements. 117-2718

117–2718



106-6755

1. Engine coolant under pressure.
2. Explosion hazard—read the *Operator's Manual.*
3. Warning—do not touch the hot surface.
4. Warning—read the *Operator's Manual.*



98-4387

1. Warning—wear hearing protection.



93-6688

1. Warning—read the instructions before servicing or performing maintenance.
2. Cutting hazard of hand or foot—stop the engine and wait for moving parts to stop.

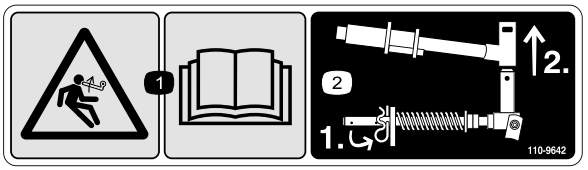

110-9642

1. Stored energy hazard—read the *Operator's Manual.*
2. Move the cotter pin to the hole closest to the rod bracket and then remove the lift arm and pivot yoke.

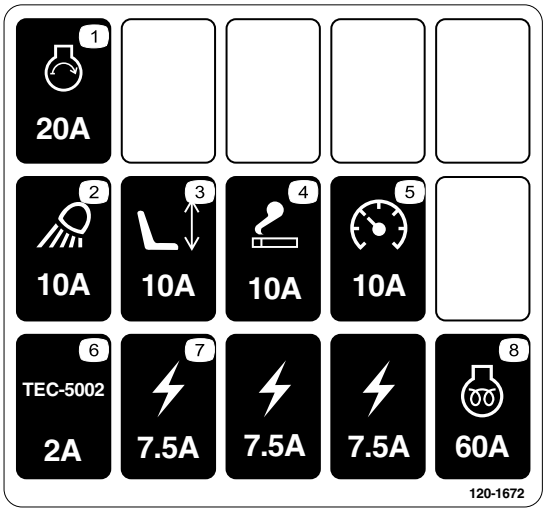

120-1672

1. Starter, 20A
2. Work light, 10A
3. Seat, 10A
4. Power point, 10A
5. Gauges, 10A
6. GM4500 controller, 2A
7. Power supplied, 7.5A
8. Engine preheat, 60A

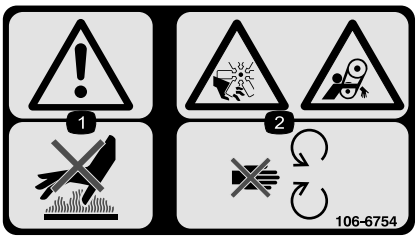

106-6754

1. Warning—do not touch the hot surface.
2. Cutting/dismemberment hazard, fan and entanglement hazard, belt—stay away from moving parts.

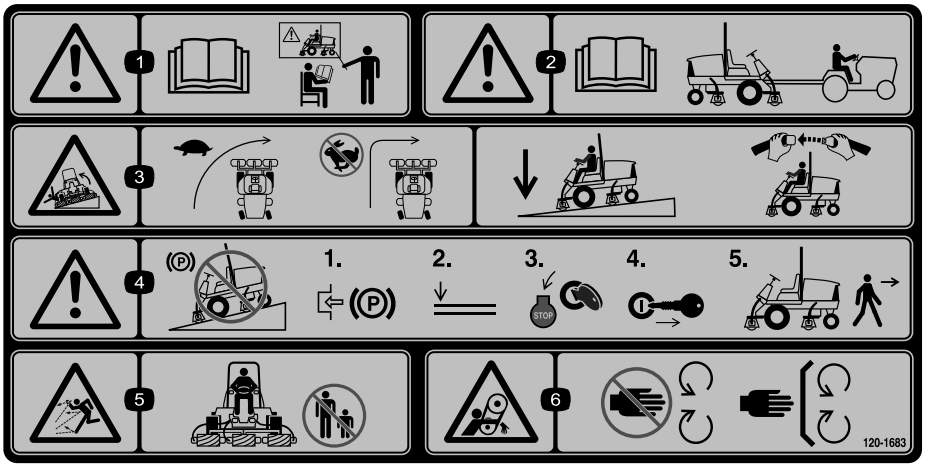

120-1683

1. Warning—read the *Operator's Manual*, do not operate this machine unless you are trained.
2. Warning—read the *Operator's Manual* before towing the machine.
3. Tipping hazard—slow machine before turning, do not turn at high speeds; lower the cutting unit when driving down slopes; use a roll over protection system and wear the seat belt
4. Warning—do not park the machine on slopes; engage the parking brake, lower the cutting units, stop the engine and remove the ignition key before leaving the machine.
5. Thrown object hazard—keep bystanders a safe distance from the machine.
6. Entanglement hazard, belt—stay away from moving parts, keep all guards and shields in place.

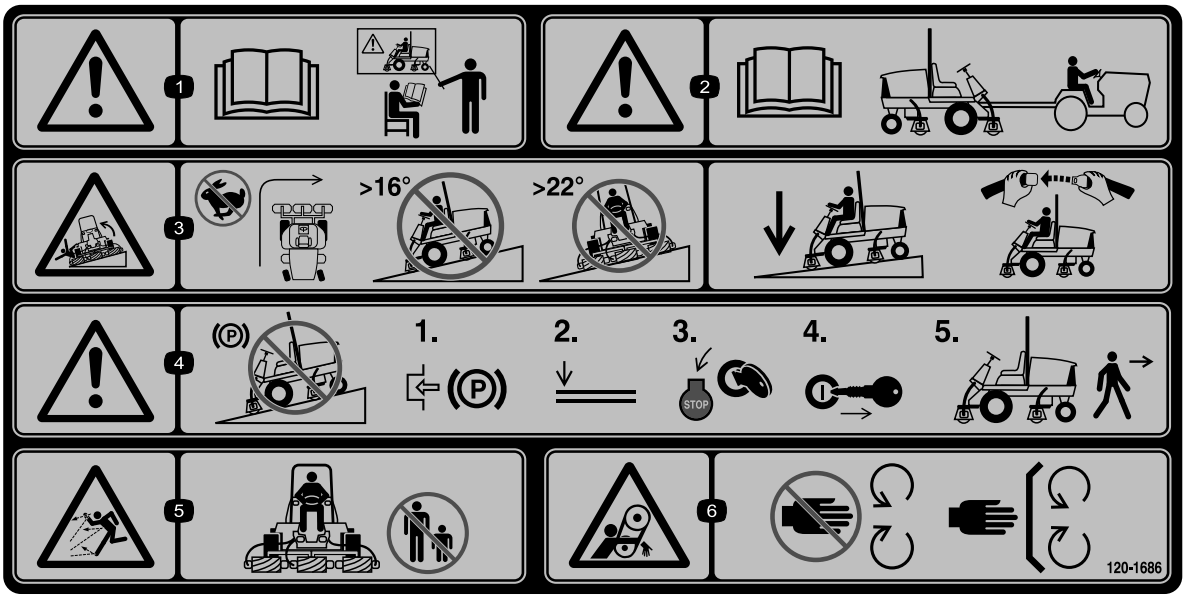

120-1686

Affix over part no. 120–1683 for CE*

*This safety decal includes a slope warning required on the machine fro compliance to the European Lawn Mower Standard EN 836.1997. The conservative maximum slope angles indicated for operation of this machine are prescribed by and required by this standard.

1. Warning—read the *Operator's Manual*, do not operate this machine unless you are trained.
2. Warning—read the *Operator's Manual* before towing the machine.
3. Tipping hazard—do not turn at high speeds, do not up and down slopes greater than 16 degrees, do not mow across slopes greater than 22 degrees; lower the cutting unit when driving down slopes; use a roll over protection system and wear the seat belt
4. Warning—do not park the machine on slopes; engage the parking brake, lower the cutting units, stop the engine and remove the ignition key before leaving the machine.
5. Thrown object hazard—keep bystanders a safe distance from the machine.
6. Entanglement hazard, belt—stay away from moving parts, keep all guards and shields in place.

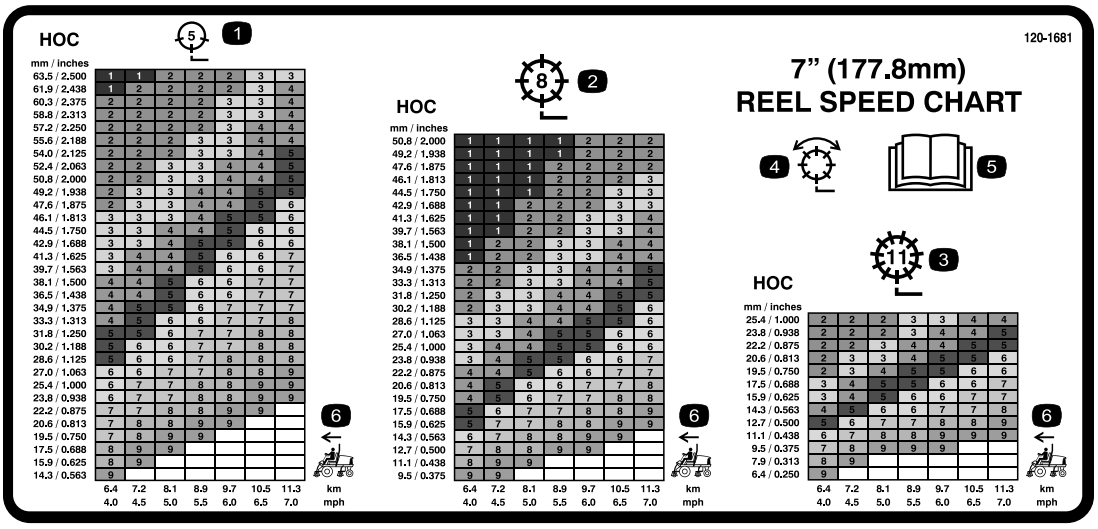

120-1681

1. 5 Blade cutting unit
2. 8 Blade cutting unit
3. 11 Blade cutting unit
4. Mow and backlap
5. Read the *Operator's Manual.*
6. Machine speed

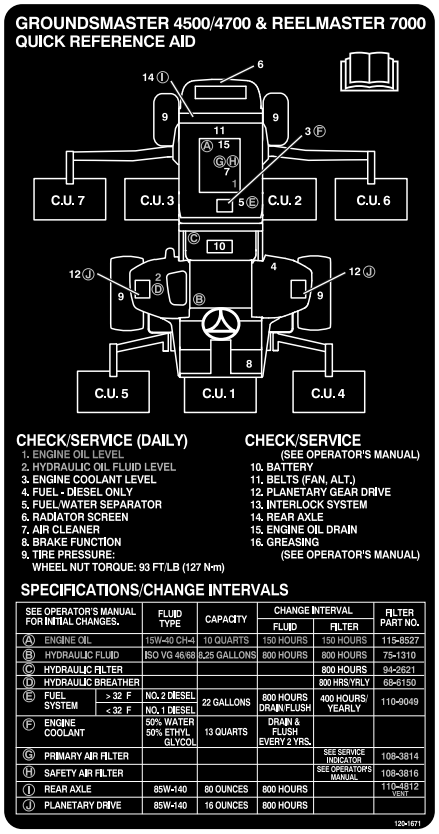

120-1671

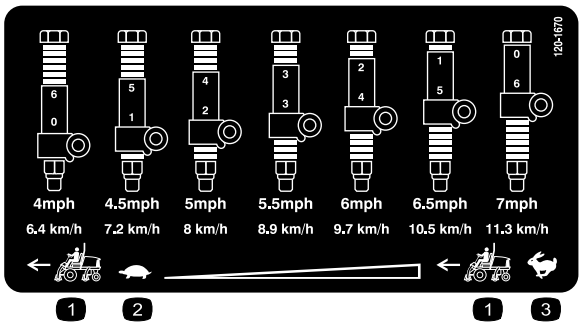

120-1670

1. Traction unit speed
2. Slow
3. Fast



Battery Symbols

Some or all of these symbols are on your battery

1. Explosion hazard
2. No fire, open flame, or smoking.
3. Caustic liquid/chemical burn hazard
4. Wear eye protection
5. Read the *Operator's Manual.*
6. Keep bystanders a safe distance from the battery.
7. Wear eye protection; explosive gases can cause blindness and other injuries
8. Battery acid can cause blindness or severe burns.
9. Flush eyes immediately with water and get medical help fast.
10. Contains lead; do not discard.

Setup

Loose Parts

Use the chart below to verify that all parts have been shipped.

Procedure	Description	Qty.	Use
1	Warning decal	1	Used only on machines requiring CE Compliance.
2	Hood lock bracket Rivet Screw, 1/4 x 2 inch Flat washer, 1/4 inch Locknut, 1/4 inch	1 2 1 2 1	Used only on machines requiring European CE Compliance.
3	Front hose guide-R.H. Front hose guide-L.H.	1 1	Install the cutting units
4	No parts required	–	Adjust the turf compensation spring.
5	Cutting unit kickstand	1	Install the Cutting Unit Kickstand.
6	No parts required	–	Grease the machine.
7	No parts required	–	Check the rear axle lubricant, hydraulic fluid, and engine oil levels
8	Gauge bar	1	Use the gauge bar to adjust the cutting unit.

Media and Additional Parts

Description	Qty.	Use
Operator's Manual	1	Read before operating machine
Engine Operator's Manual	1	Read before operating engine
Parts Catalog	1	Use to reference part numbers
Operator Training Material	1	View before operating machine
Certificate of Compliance	1	Use for CE Compliance

Note: Determine the left and right sides of the machine from the normal operating position.

1

Replacing the Warning Decal for CE Compliance

Parts needed for this procedure:

1	Warning decal

Procedure

On machines requiring CE Compliance, affix the warning decal, part no. 120–1683 over the warning decal part no. 120–1686.

2

Installing the Hood Lock for CE Compliance

Parts needed for this procedure:

1	Hood lock bracket
2	Rivet
1	Screw, 1/4 x 2 inch
2	Flat washer, 1/4 inch
1	Locknut, 1/4 inch

Procedure

1. Unhook the hood latch from the hood latch bracket (Figure 3).

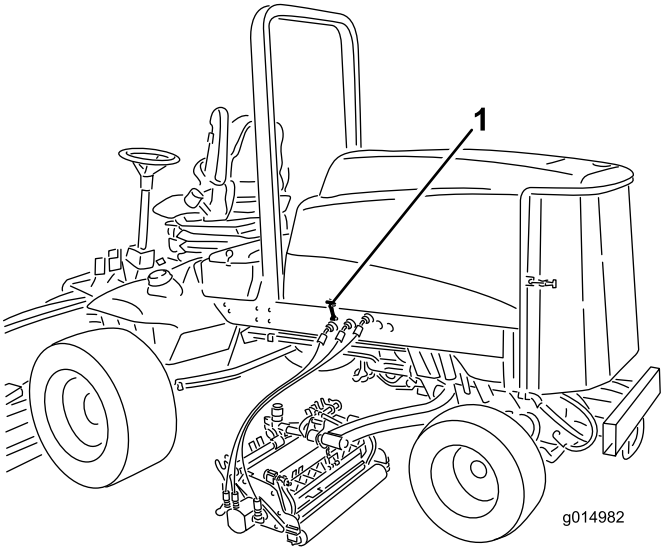

Figure 3

1. Hood latch

2. Remove the (2) rivets securing the hood latch bracket to the hood (Figure 4). Remove the hood latch bracket from the hood.

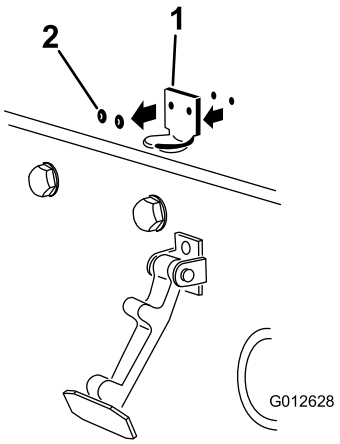

Figure 4

1. Hood latch bracket 2. Rivets

3. While aligning the mounting holes, position the CE lock bracket and the hood latch bracket onto the hood. The lock bracket must be against the hood (Figure 4). Do not remove bolt and nut assembly from the lock bracket arm.

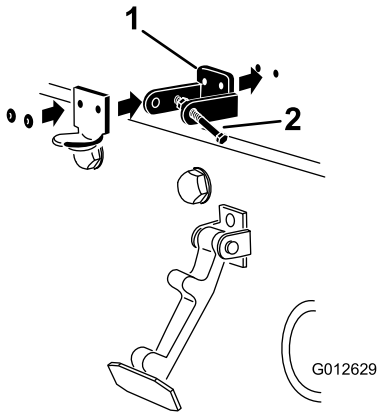

Figure 5

1. CE lock bracket
2. Bolt and nut assembly

4. Align the washers with the holes on the inside of the hood.
5. Rivet the brackets and the washers to the hood (Figure 5).
6. Hook the latch onto the hood latch bracket (Figure 6).

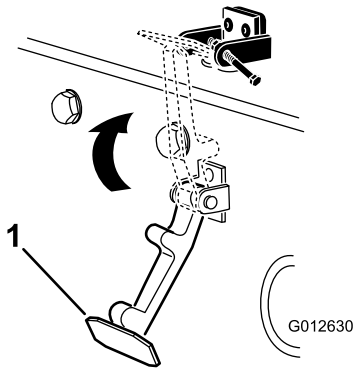

Figure 6

1. Hood latch

7. Screw the bolt into the other arm of hood lock bracket to lock the latch in position (Figure 7). Tighten bolt securely but do not tighten nut.

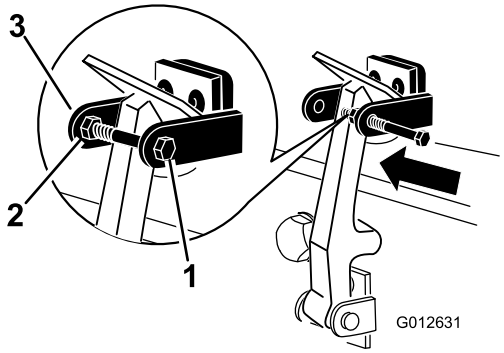

Figure 7

1. Bolt
2. Nut
3. Arm of hood lock bracket

3

Installing the Cutting Units

Parts needed for this procedure:

1	Front hose guide-R.H.
1	Front hose guide-L.H.

Procedure

1. Remove the reel motors from the shipping brackets.
2. Remove the shipping brackets and discard.
3. Remove the cutting units from the cartons. Assemble and adjust as described in the cutting unit *Operator's Manual*.
4. Make sure the counter weight (Figure 8) is installed to the proper end of the cutting unit as described in the cutting unit *Operator's Manual*.

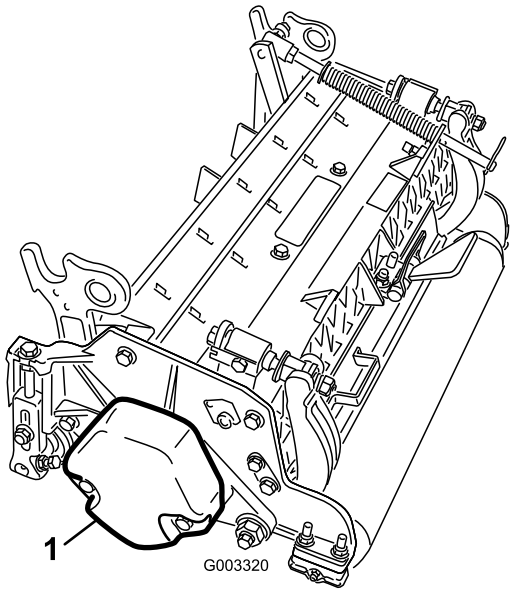

Figure 8

1. Counter weight

5. All the cutting units are shipped with the turf compensation spring mounted to the right side of the cutting unit. The turf compensation spring must be mounted to the same side of the cutting unit as the reel drive motor. Reposition the turf compensation as follows:

   A. Remove the 2 carriage bolts and nuts securing the rod bracket to the cutting unit tabs (Figure 9).

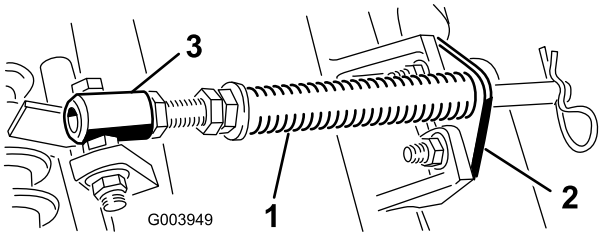

Figure 9

1. Turf compensation spring
2. Rod bracket
3. Spring tube

B. Remove the flange nut securing the spring tube bolt to the carrier frame tab (Figure 9) Remove the assembly.

C. Mount the spring tube bolt to the opposite tab on the carrier frame and secure with the flange nut. The bolt head is to be positioned to the outer side of the tab as shown in Figure 10.

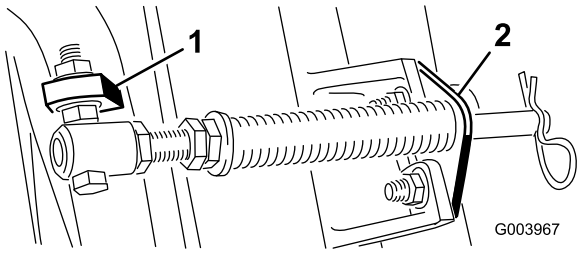

Figure 10

1. Opposite carrier frame tab
2. Rod bracket

D. Mount the rod bracket to the cutting unit tabs with the carriage bolts and nuts (Figure 10). Also, on the #4 (left front) cutting unit, mount the left hand hose guide to the front of the cutting unit tabs when reinstalling the rod bracket (Figure 12).

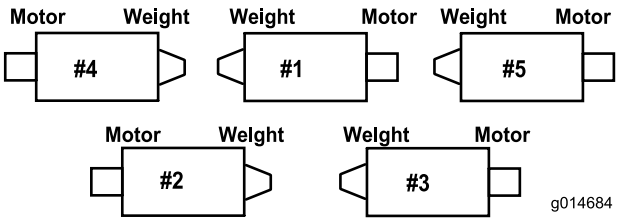

Figure 11

Note: On the #5 (right front) cutting unit, use the rod bracket mounting nuts to install the right hand hose guide to the front of the cutting unit tabs.

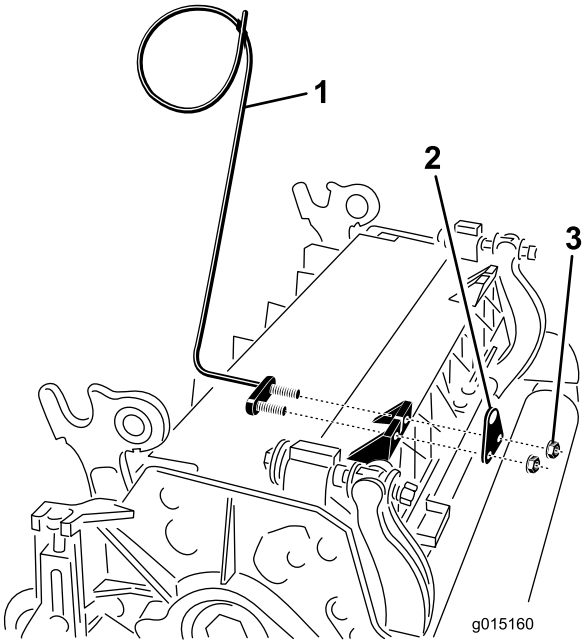

Figure 12

1. Hose guide (Left hand shown)
2. Rod bracket
3. Nuts

Note: When installing or removing the cutting units, make sure the hairpin cotter is installed in the spring rod hole next to the rod bracket. Otherwise, the hairpin cotter must be installed in the hole in the end of the rod.

6. On 27 inch cutting units only, increase the steering on the rear cutting units by removing the (2) pivot spacers, hex socket screws and flange lock nuts (Figure 13) from the rear (#2 and #3) cutting unit carrier frames (Figure 11).

Note: 32 inch cutting units are not equipped with pivot spacers.

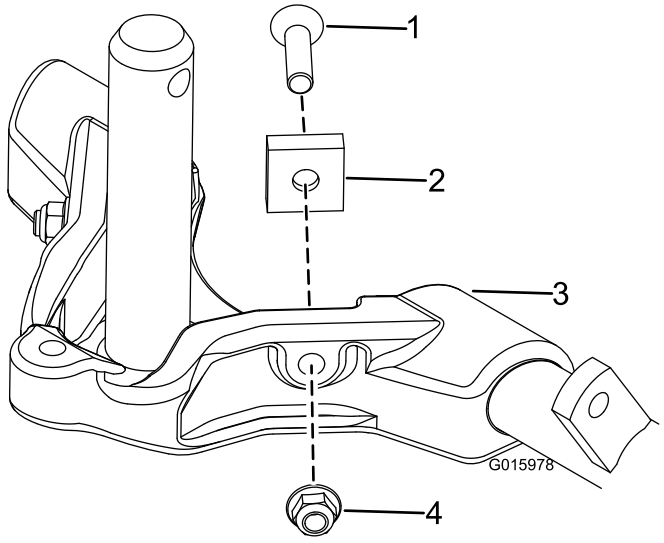

Figure 13

1. Hex socket screw
2. Pivot spacer
3. Carrier frame
4. Flange lock nut

7. Lower all the lift arms completely.
8. Coat the carrier frame shaft with clean grease (Figure 14).

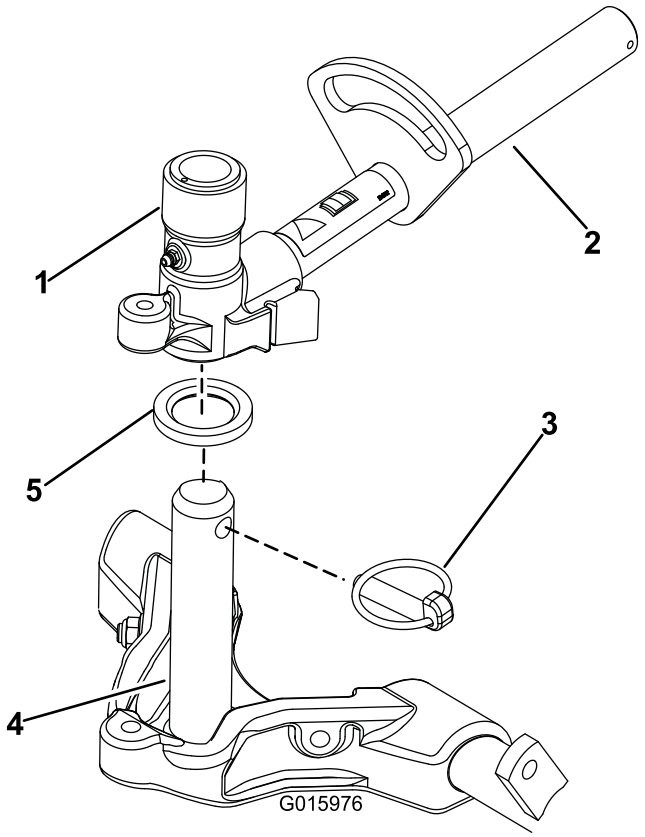

Figure 14

1. Lift arm pivot yoke
2. Lift arm
3. Klik pin
4. Carrier frame shaft
5. Thrust washer

9. For the front cutting units, slide a cutting unit under the lift arm while inserting the carrier frame shaft up into the lift arm pivot yoke (Figure 14). Make sure the thrust washer is in position on the carrier frame shaft.
10. Secure the carrier frame shaft to the lift arm yoke with the Klik pin (Figure 14).
11. To lock (fix) the steering on the cutting units, secure the pivot yoke to the carrier frame with the snapper pin (Figure 15).

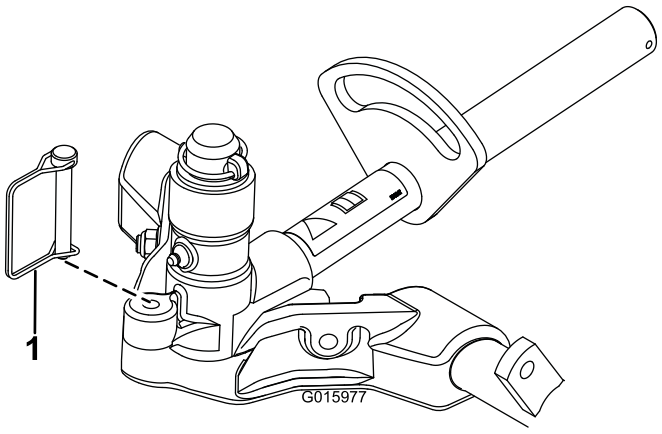

Figure 15

1. Snapper pin

Note: Fixed steering is recommended when cutting side hills.

12. Use the following procedure on the rear cutting units when the height of cut is above 3/4 inch.
    A. Remove the lynch pin and washer securing the lift arm pivot shaft to the lift arm and slide the lift arm pivot shaft out of the lift arm (Figure 16).

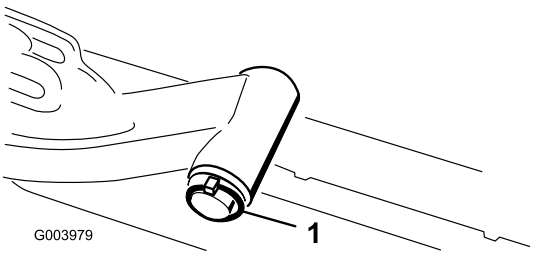

Figure 16

1. Lift arm pivot shaft lynch pin and washer

    B. Insert the lift arm yoke onto the carrier frame shaft (Figure 14).
    C. Insert the lift arm shaft into the lift arm and secure it with the washer and lynch pin (Figure 16).

13. Secure the lift arm chain to the chain bracket with the snapper pin (Figure 17). Use the number of chain links described in the cutting unit *Operator's Manual*.

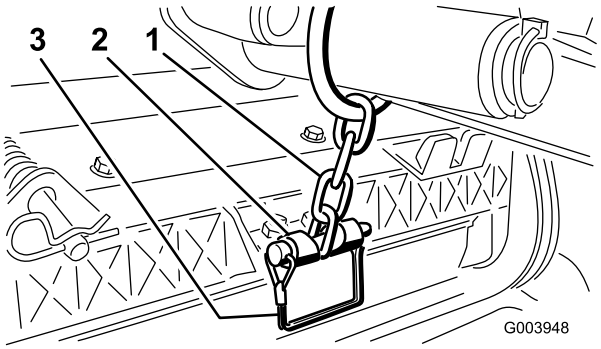

Figure 17

1. Lift arm chain
2. Chain bracket
3. Snapper pin

14. Coat the spline shaft of the reel motor with clean grease.
15. Oil the reel motor O-ring and install it onto the motor flange.
16. Install the motor by rotating it clockwise so that the motor flanges clear the bolts (Figure 18). Rotate the motor counterclockwise until the flanges encircle the bolts then tighten the bolts.

Important: Make sure the reel motor hoses are not twisted, kinked or in the risk of being pinched.

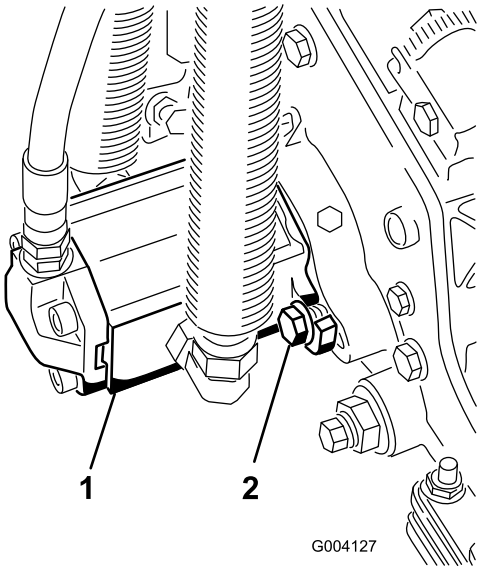

Figure 18

1. Reel drive motor
2. Mounting bolts

4

Adjusting the Turf Compensation Spring

No Parts Required

Procedure

The turf compensation spring (Figure 19) transfers weight from the front to the rear roller. (This helps to reduce a wave pattern in the turf, also known as marcelling or bobbing.)

Important: Make spring adjustments with the cutting unit mounted to the traction unit, pointing straight ahead and lowered to the shop floor.

1. Make sure the hairpin cotter is installed in the rear hole in the spring rod (Figure 19).

   Note: When servicing the cutting unit, move the hairpin cotter to the spring rod hole next to the turf compensation spring.

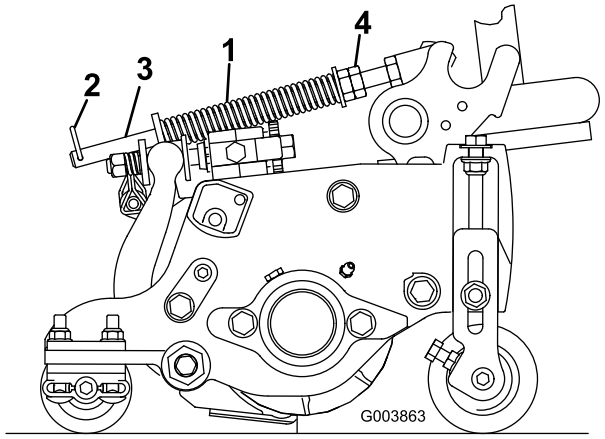

Figure 19

1. Turf compensation spring
2. Hair pin cotter
3. Spring rod
4. Hex nuts

2. Tighten the hex nuts on the front end of the spring rod until the compressed length of the spring is 6.25 inches (15.9 cm) (Figure 19).

   Note: When operating on rough terrain decrease the spring length by 1/2 inch. Ground following will be slightly decreased.

   Note: The turf compensation setting will need to be reset if the HOC setting or the Aggressiveness of Cut setting is changed.

5

Using the Cutting Unit Kickstand

Parts needed for this procedure:

1	Cutting unit kickstand

Procedure

Whenever the cutting unit has to be tipped to expose the bedknife/reel, prop up the rear of the cutting unit with the kickstand to make sure the nuts on the back end of the bedbar adjusting screws are not resting on the work surface (Figure 20).

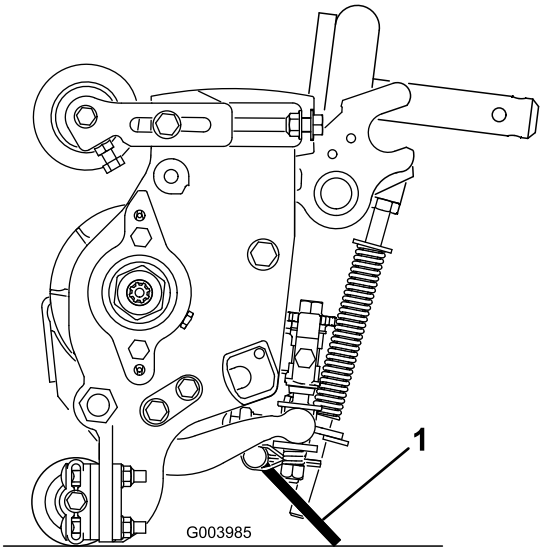

Figure 20

1. Cutting unit kickstand

Secure the kickstand to the chain bracket with the snapper pin (Figure 21).

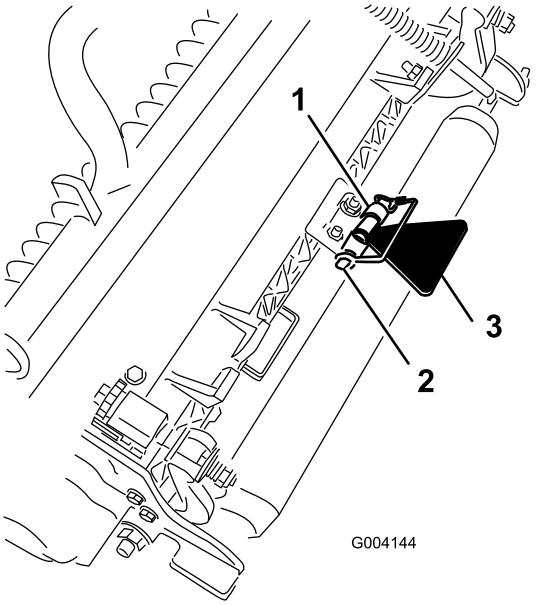

Figure 21

1. Chain bracket
2. Snapper pin
3. Cutting unit kickstand

6

Greasing the Machine

No Parts Required

Procedure

Before the machine is operated, it must be greased to ensure proper lubrication. Refer to Lubrication section. Failure to properly grease the machine will result in premature failure of critical parts.

7

Checking Fluid Levels

No Parts Required

Procedure

1. Check the rear axle lubricant level before the engine is first started, refer to Checking the Rear Axle Lubricant in Drive System Maintenance.

2. Check the hydraulic fluid level before the engine is first started, refer to Checking the Hydraulic Fluid Level in Operation.
3. Check the engine oil level before and after the engine is first started, refer to Checking the Engine Oil Level in Operation.

8

Using the Gauge Bar

Parts needed for this procedure:

1	Gauge bar

Procedure

Use the gauge bar to adjust the cutting unit. Refer to the Cutting Unit Operator's Manual for the adjustment procedures (Figure 22).

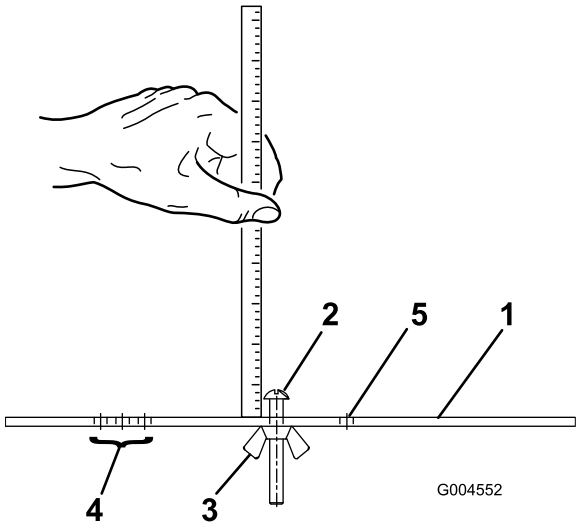

Figure 22

1. Gauge bar
2. Height adjusting screw
3. Nut
4. Holes used for setting Groomer HOG
5. Hole not used

Product Overview

Controls

Brake Pedals

Two foot pedals (Figure 23) operate individual wheel brakes for turning assistance and to aid in obtaining better side hill traction.

Pedal Locking Latch

The pedal locking latch (Figure 23) connects the pedals together to engage the parking brake.

Parking Brake Pedal

To engage the parking brake, (Figure 23) connect the pedals together with the pedal locking latch, push down on the right brake pedal while engaging the toe pedal. To release the parking brake, press one of the brake pedals until the parking brake latch retracts.

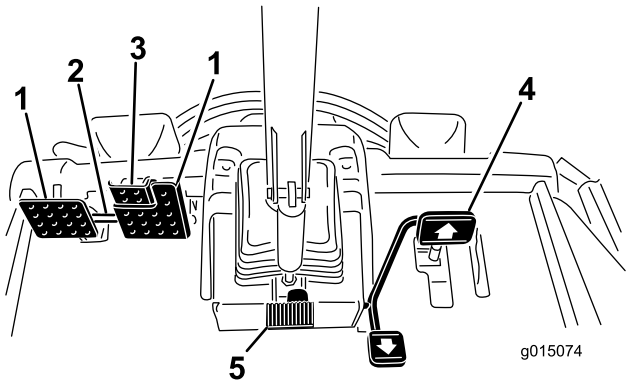

Figure 23

1. Brake pedal
2. Pedal locking latch
3. Parking brake pedal
4. Traction pedal
5. Tilt steering pedal

Traction Pedal

The traction pedal (Figure 23) controls forward and reverse operation. Depress the top of the pedal to move forward and the bottom to move backward. Ground speed depends on how far the pedal is depressed. For no load, maximum ground speed, fully depress the pedal while the throttle is in Fast.

To stop, reduce your foot pressure on the traction pedal and allow it to return to the center position.

Tilt Steering Pedal

To tilt the steering wheel towards you, press the foot pedal (Figure 23) down, and pull the steering tower

toward you to the most comfortable position and then release the pedal.

Mow Speed Limiter

When the mow speed limiter (Figure 24) is flipped up it will control the mow speed and allow the cutting units to be engaged. Each spacer adjusts the mowing speed by ½ mile per hour. The more spacers you have, on the top of the bolt the slower you will go. For transport, flip back the mow speed limiter and you will have maximum transport speed.

Speed Limiter Screws

Adjust the screw(s) (Figure 24) to limit the amount the traction pedal can be depressed in the forward or reverse direction to limit speed.

Important: The speed limiter screw must stop the traction pedal before the pump reaches full stroke or damage to the pump may occur.

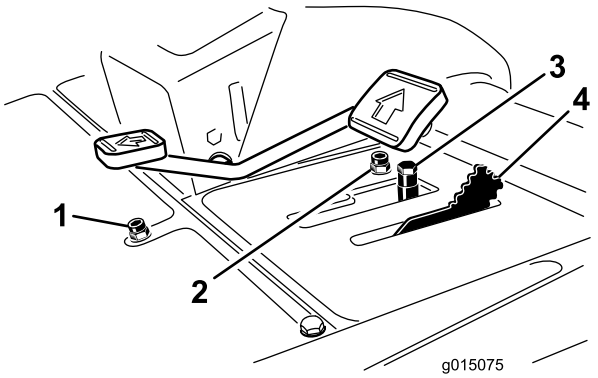

Figure 24

1. Reverse speed limiter screw
2. Forward speed limiter screw
3. Spacers
4. Mow speed limiter

Diagnostic Light

The diagnostic light (Figure 25) will illuminate should a system fault be recognized.

Engine Coolant Temperature Gauge

During normal operating conditions the gauge (Figure 25) should be in the green range. Check the cooling system if the gauge goes to the yellow or red range.

Engine Oil Pressure Warning Light

The light (Figure 25) illuminates when the engine oil pressure is dangerously low.

Charge Indicator

The charge indicator (Figure 25) illuminates when the system charging circuit malfunctions.

Key Switch

The key switch (Figure 25) has three positions: Off, On/Preheat, and Start.

PTO Switch

The PTO switch (Figure 25) has two positions: Out (start) and In (stop). Pull the PTO button out to engage the cutting unit blades. Push in the button to disengage the cutting unit blades.

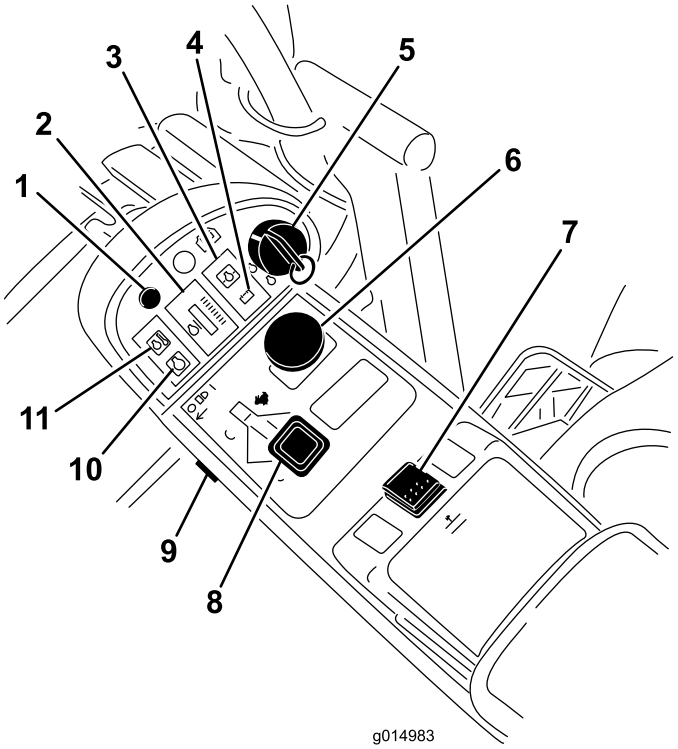

Figure 25

1. Diagnostic light
2. Engine coolant temperature gauge
3. Engine oil pressure warning light
4. Charge indicator
5. Key switch
6. PTO switch
7. Lift switch
8. Throttle control
9. Light switch
10. Glow plug indicator light
11. Engine coolant temperature warning light

Lift Switch

The lift switch (Figure 25) raises and lowers the cutting units. Press the switch forward to lower the cutting units and backward to raise the cutting units. When starting

the machine, with the cutting units in the down position, press the lift switch down to allow the cutting units to float and mow.

Throttle Control

Move the control (Figure 25) forward to increase the engine speed and rearward to decrease the speed.

Light Switch

Press the lower edge of the switch (Figure 25) to turn on the lights. Press the upper edge of the switch to turn off the lights.

Glow Plug Indicator Light

When lit, the glow plug indicator light (Figure 25) indicates that the glow plugs are on.

Engine Coolant Temperature Warning Light

The light (Figure 25) illuminates and the cutting units shut down (PTO disengages). If the temperature continues to rise the engine will shut down.

Power Point

The power point (Figure 26) is used to power optional 12 volt electrical accessories.

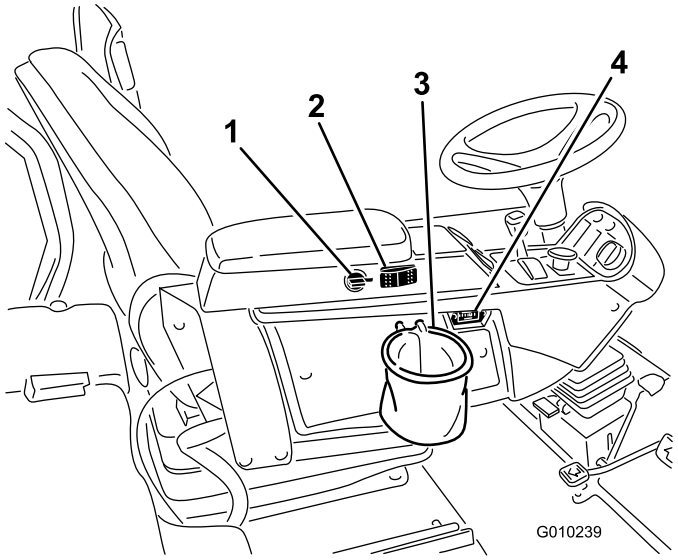

Figure 26

1. Power point
2. Engine cooling fan switch
3. Bag holder
4. Hour meter

Engine Cooling Fan Switch

The machine is equipped with a hydraulically driven auto reversing engine cooling fan. The fan switch (Figure 26) has two positions R (manual reverse) and Auto (normal). Refer to Engine Cooling Fan Operation in the Operation Section of manual.

Bag Holder

Use the bag holder (Figure 26) for storage.

Hour Meter

The hour meter (Figure 26) shows the total hours that the machine has been operated.

Backlap Levers

Use the backlap levers for backlapping the reels (Figure 27).

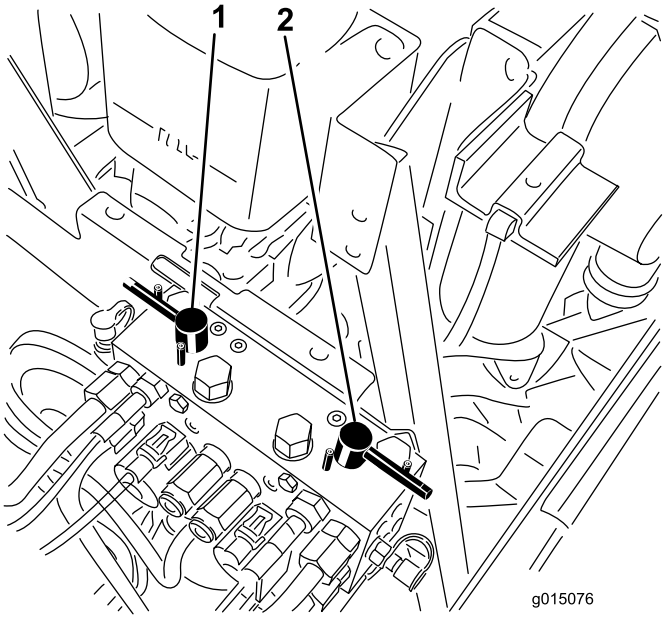

Figure 27

1. Front backlap lever
2. Rear backlap lever

Reel Speed Control

The reel speed control regulates the speed of the front and rear cutting units (Figure 28). The reel speed increases as the knob is turned clockwise.

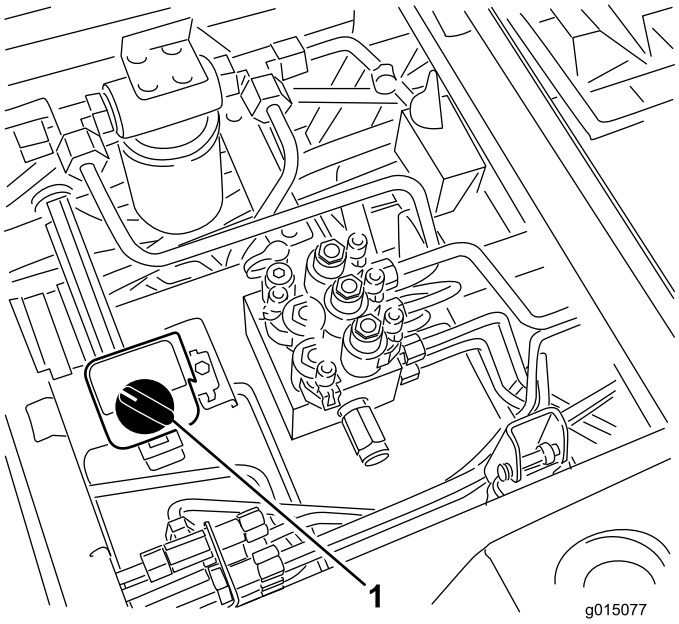

Figure 28

1. Reel speed controls

Fuel Gauge

The fuel gauge (Figure 29) indicates the level of fuel in the tank.

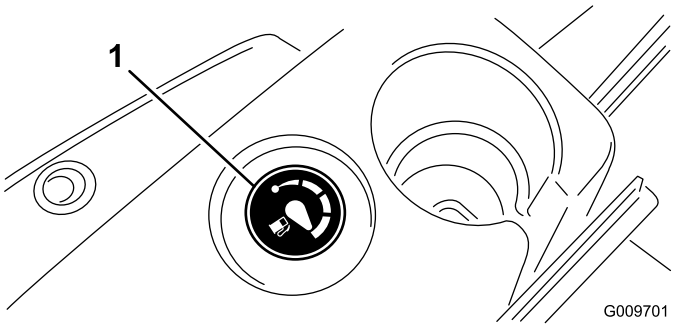

Figure 29

1. Fuel gauge

Seat Adjustments

Fore and Aft Adjusting Lever

Pull out on the lever to slide the seat fore or aft (Figure 30).

Seat Arm Rest Adjusting Knob

Rotate the knob to adjust the seat arm rest angle (Figure 30).

Seat Back Adjusting Lever

Move the lever to adjust the seat back angle (Figure 30).

Weight gauge

Indicates when the seat is adjusted to the weight of the operator (Figure 30). Height adjustment is made by positioning the suspension within the range of the green region.

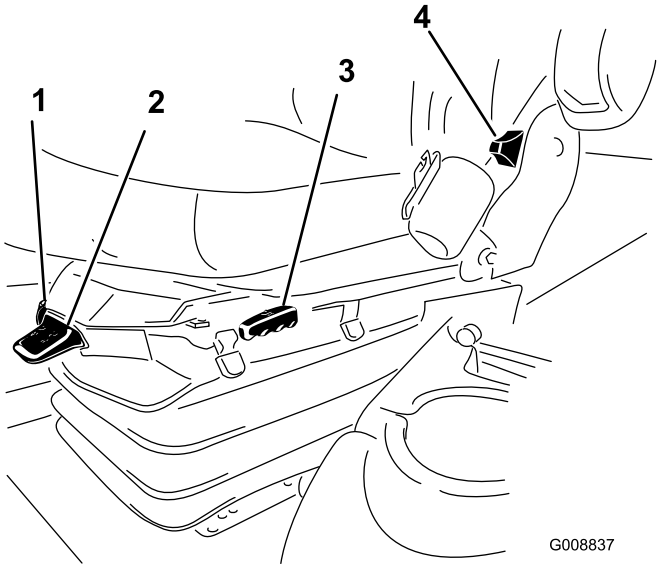

Figure 30

1. Weight gauge
2. Weight adjusting lever
3. Fore and Aft adjusting lever
4. Seat back adjusting lever
5. Arm rest adjusting knob

Weight Adjusting Lever

Adjust for operator weight (Figure 30). Pull up on the lever to increase the air pressure and push down to decrease the air pressure. The proper adjustment is attained when the weight gauge is in the green region.

Specifications

Note: Specifications and design are subject to change without notice.

Traction Unit Specifications

Width of cut	121 inches (307 cm)
Overall width, cutting units down	136 inches (345 cm)
Overall width, cutting units up (transport)	94 inches (239 cm)
Overall length	145.8 inches (370 cm)
Height with ROPS	87 inches (220 cm)
Track Width, front	90 inches (229 cm)
Track Width, rear	55.5 inches (141 cm)
Wheel base	67-1/2 inches (171 cm)
Net Weight (with no cutting units and no fluids)	3470 lb (1574 kg)

Attachments/Accessories

A selection of Toro approved attachments and accessories are available for use with the machine to enhance and expand its capabilities. Contact your Authorized Service Dealer or Distributor or go to www.Toro.com for a list of all approved attachments and accessories.

Operation

Note: Determine the left and right sides of the machine from the normal operating position.

⚠ CAUTION

This machine produces sound levels in excess of 85 dBA at the operator's ear and can cause hearing loss through extended periods of exposure.

Wear hearing protection when operating this machine.

⚠ CAUTION

If you leave the key in the ignition switch, someone could accidently start the engine and seriously injure you or other bystanders.

Remove the key from the ignition before you do any maintenance.

Checking the Engine Oil Level

Service Interval: Before each use or daily

The engine is shipped with oil in the crankcase; however, the oil level must be checked before and after the engine is first started.

The crankcase capacity is approximately 10 qt. (9.5 l) with the filter.

Use high-quality engine oil that meets the following specifications:

- API Classification Level Required: CH-4, CI-4 or higher.
- Preferred oil: SAE 15W-40 (above 0°F)
- Alternate oil: SAE 10W-30 or 5W-30 (all temperatures)

  Note: Toro Premium Engine oil is available from your distributor in either 15W-40 or 10W-30 viscosity. See the parts catalog for part numbers.

  Note: The best time to check the engine oil is when the engine is cool before it has been started for the day. If it has already been run, allow the oil to drain back down to the sump for at least 10 minutes before checking. If the oil level is at or below the 'add' mark on the dipstick, add oil to bring the oil level to the 'full' mark. **Do not overfill.** If the oil level is between the 'full' and 'add' marks, no oil addition is required.

1. Park the machine on a level surface.
2. Unlock the hood latches and open the hood (Figure 31).

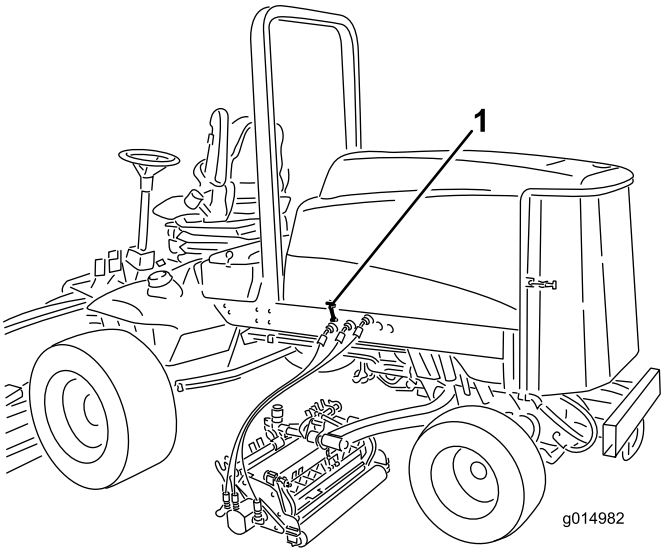

Figure 31

1. Hood latch

3. Remove the dipstick, wipe it clean, install the dipstick into the tube, and pull it out again.

   The oil level should be in the safe range (Figure 32).

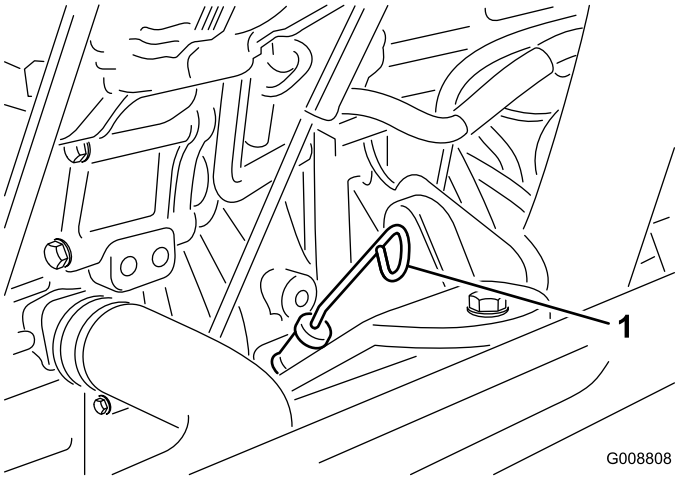

Figure 32

1. Dipstick

4. If the oil is below the safe range, remove the fill cap (Figure 33) and add oil until the level reaches the FULL mark. **Do not overfill**.

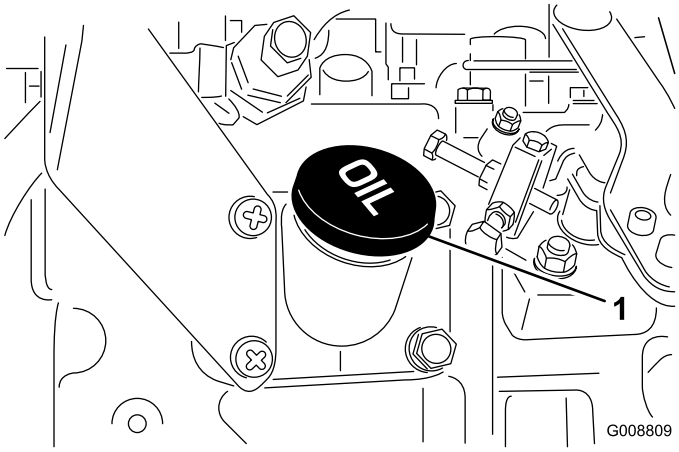

Figure 33

1. Oil fill cap

Note: When using different oil, drain all old oil from the crankcase before adding new oil.

5. Install the oil fill cap and dipstick.
6. Close the hood and secure it with the latches.

Checking the Cooling System

Service Interval: Before each use or daily

Check level of coolant at the beginning of each day. Capacity of system is 13 qt. (12.3 l).

1. Carefully remove the radiator cap.

⚠ CAUTION

If the engine has been running, the pressurized, hot coolant can escape and cause burns.

- **Do not open the radiator cap when the engine is running.**
- **Use a rag when opening the radiator cap, and open the cap slowly to allow steam to escape.**

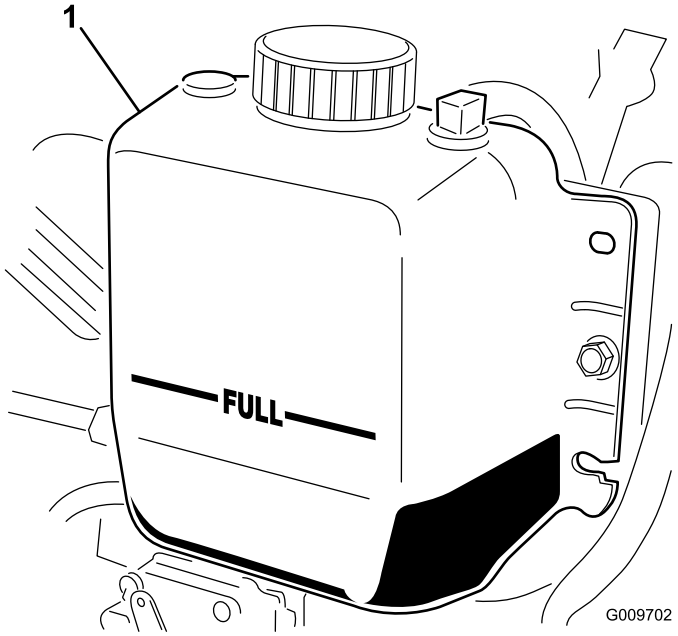

Figure 34

1. Expansion tank

2. Check the coolant level in the radiator. The radiator should be filled to the top of the filler neck and the expansion tank filled to the FULL mark (Figure 34).
3. If the coolant is low, add a 50/50 mixture of water and ethylene glycol anti freeze. Do not use water only or alcohol/methanol base coolants.
4. Install the radiator cap and expansion tank cap.

Filling the Fuel Tank

Use only clean, fresh diesel fuel or biodiesel fuels with low (<500 ppm) or ultra low (<15 ppm) sulfur content. The minimum cetane rating should be 40. Purchase fuel in quantities that can be used within 180 days to ensure fuel freshness.

Fuel tank capacity: 22 gallons (83 l).

Use summer grade diesel fuel (No. 2-D) at temperatures above 20° F (-7° C) and winter grade (No. 1-D or No. 1-D/2-D blend) below that temperature. Use of winter grade fuel at lower temperatures provides lower flash point and cold flow characteristics which will ease starting and reduce fuel filter plugging.

Use of summer grade fuel above 20° F (-7° C) will contribute toward longer fuel pump life and increased power compared to winter grade fuel.

Important: Do not use kerosene or gasoline instead of diesel fuel. Failure to observe this caution will damage the engine.

⚠ WARNING

Fuel is harmful or fatal if swallowed. Long-term exposure to vapors can cause serious injury and illness.

- **Avoid prolonged breathing of vapors.**
- **Keep face away from nozzle and gas tank or conditioner opening.**
- **Keep fuel away from eyes and skin.**

Biodiesel Ready

This machine can also use a biodiesel blended fuel of up to B20 (20% biodiesel, 80% petrodiesel). The petrodiesel portion should be low or ultra low sulfur. Observe the following precautions:

- The biodiesel portion of the fuel must meet specification ASTM D6751 or EN14214.
- The blended fuel composition should meet ASTM D975 or EN590.
- Painted surfaces may be damaged by biodiesel blends.
- Use B5 (biodiesel content of 5%) or lesser blends in cold weather.
- Monitor seals, hoses, gaskets in contact with fuel as they may be degraded over time.
- Fuel filter plugging may be expected for a time after converting to biodiesel blends.
- Contact your distributor if you wish for more information on biodiesel.

⚠ DANGER

In certain conditions, fuel is extremely flammable and highly explosive. A fire or explosion from fuel can burn you and others and can damage property.

- **Use a funnel and fill the fuel tank outdoors, in an open area, when the engine is cold. Wipe up any fuel that spills.**
- **Never fill the fuel tank inside an enclosed trailer.**
- **Do not fill the fuel tank completely full. Add fuel to the fuel tank until the level is 1 in. (25 mm) below the top of the tank, not the filler neck. This empty space in the tank allows the fuel to expand.**
- **Never smoke when handling fuel, and stay away from an open flame or where fuel fumes may be ignited by a spark.**
- **Store fuel in an approved container and keep it out of the reach of children. Never buy more than a 180-day supply of fuel.**
- **Do not operate without entire exhaust system in place and in proper working condition.**

1. Remove the fuel tank cap (Figure 35).

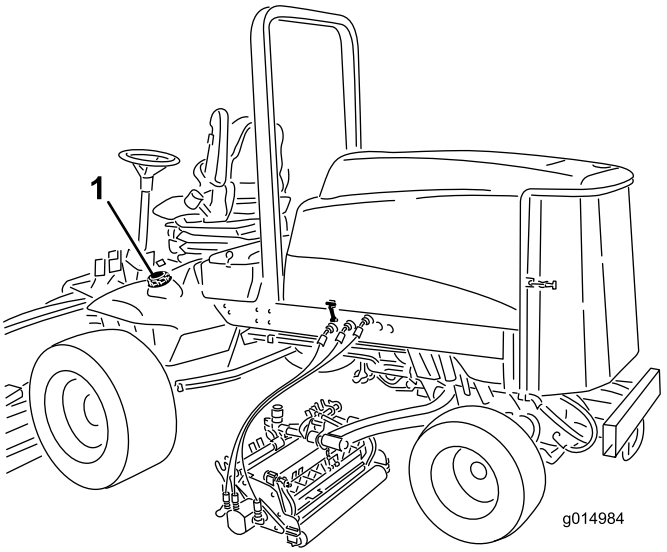

Figure 35

1. Fuel tank cap

2. Fill the tank to about 1 inch (25 mm) below the top of the tank, not the filler neck, with No. 2 diesel fuel. Then install the cap.

   Note: If possible, fill the fuel tank after each use. This will minimize possible buildup of condensation inside the fuel tank.

⚠ DANGER

In certain conditions during fueling, static electricity can be released causing a spark which can ignite the fuel vapors. A fire or explosion from fuel can burn you and others and can damage property.

- **Always place fuel containers on the ground away from your vehicle before filling.**
- **Do not fill fuel containers inside a vehicle or on a truck or trailer bed because interior carpets or plastic truck bed liners may insulate the container and slow the loss of any static charge.**
- **When practical, remove equipment from the truck or trailer and refuel the equipment with its wheels on the ground.**
- **If this is not possible, then refuel such equipment on a truck or trailer from a portable container, rather than from a fuel dispenser nozzle.**
- **If a fuel dispenser nozzle must be used, keep the nozzle in contact with the rim of the fuel tank or container opening at all times until fueling is complete.**

Checking the Hydraulic Fluid Level

Service Interval: Before each use or daily

The machines reservoir is filled at the factory with approximately 7.5 U.S. gallons (13.2 l) of high quality hydraulic fluid. Check the level of the hydraulic fluid before the engine is first started and daily thereafter. The recommended replacement fluid is as follows:

Toro Premium All Season Hydraulic Fluid
(Available in 5 gallon pails or 55 gallon drums. See parts catalog or Toro distributor for part numbers.)

Alternate fluids: If the Toro fluid is not available, other fluids may be used provided they meet all the following material properties and industry specifications. We do not recommend the use of synthetic fluid. Consult with your lubricant distributor to identify a satisfactory product Note: Toro will not assume responsibility for damage caused by improper substitutions, so use only products from reputable manufacturers who will stand behind their recommendation.

High Viscosity Index/Low Pour Point Anti-wear Hydraulic Fluid, ISO VG 46

Material Properties:
Viscosity, ASTM D445 cSt @ 40°C 44 to 48
cSt @ 100°C 7.9 to 8.5
Viscosity Index ASTM D2270 140 to 160
Pour Point, ASTM D97 -34°F to -49°F
Industry Specifications:
Vickers I-286-S (Quality Level), Vickers M-2950-S (Quality Level), Denison HF-0

Premium Biodegradable Hydraulic Fluid-Mobil EAL EnviroSyn 46H

Important: Mobil EAL EnviroSyn 46H is the only synthetic biodegradable fluid approved by Toro. This fluid is compatible with the elastomers used in Toro hydraulic systems and is suitable for a wide-range of temperature conditions. This fluid is compatible with conventional mineral oils, but for maximum biodegradability and performance the hydraulic system should be thoroughly flushed of conventional fluid. The oil is available in 5 gallon (19 l) containers or 55 gallon drums from your Mobil Distributor.

Note: Many hydraulic fluids are almost colorless, making it difficult to spot leaks. A red dye additive for the hydraulic system oil is available in 2/3 oz. (20 ml) bottles. One bottle is sufficient for 4-6 gal (15-22 1) of hydraulic oil. Order part no. 44-2500 from your authorized Toro distributor.

1. Position the machine on a level surface, lower the cutting units, stop the engine, and remove the key.
2. Clean the area around the filler neck and cap of the hydraulic tank (Figure 36). Remove the cap from the filler neck.

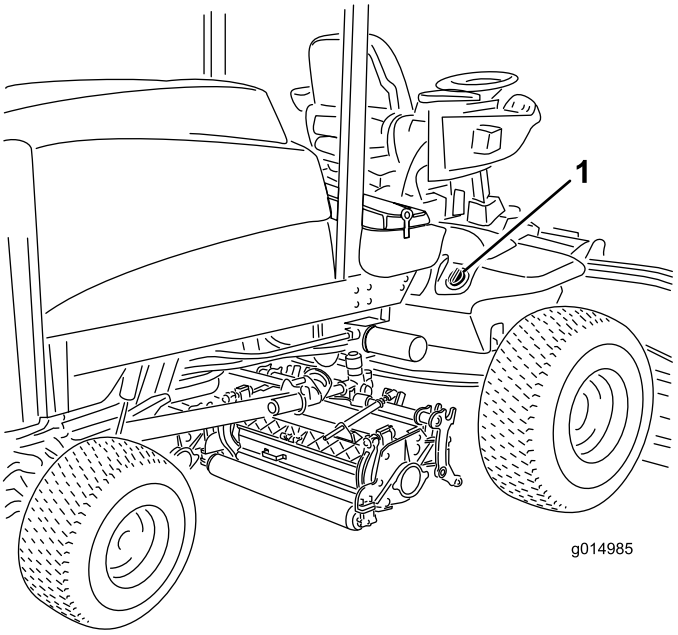

Figure 36

1. Hydraulic tank cap

3. Remove the dipstick from the filler neck and wipe it with a clean rag. Insert the dipstick into the filler neck; then remove it and check the fluid level. The fluid level should be between the two marks on the dipstick.
4. If the level is low, add the appropriate fluid to raise the level to the upper mark.
5. Install the dipstick and cap onto the filler neck.

Checking the Tire Pressure

Service Interval: Before each use or daily

The tires are over-inflated for shipping. Therefore, release some of the air to reduce the pressure. The correct air pressure in the tires is 12–15 psi (83-103 kPa). Check the tire pressure daily.

Important: Maintain the recommended pressure in all tires to ensure a good quality-of-cut and proper machine performance. Do not under-inflate.

Starting and Stopping the Engine

Starting the Engine

Important: The fuel system must be bled if any of the following situations have occurred:

- The engine has ceased running due to lack of fuel.
- Maintenance has been performed upon the fuel system components.

1. Remove your foot from the traction pedal and ensure that it is in neutral. Ensure that the parking brake is set.
2. Move the throttle control to the low idle position.
3. Turn the ignition key to the Run position. The glow indicator will light.
4. When the glow indicator dims, turn the ignition key to the Start position. Release the key immediately when the engine starts and allow it to return to the Run position. Move the throttle control to the desired position.

   Important: Do not run the starter motor more than 15 seconds at a time or premature starter failure may result. If the engine fails to start after 15 seconds, turn the key to the Off position, recheck the controls and procedures, wait 15 additional seconds, and repeat the starting procedure.

   When the temperature is less than 20°F (-7°C), the starter motor can be run for 30 seconds on then 60 seconds off for 2 attempts.

⚠ CAUTION

Shut the engine off and wait for all moving parts to stop before checking for oil leaks, loose parts, and other malfunctions.

Stopping the Engine

Important: Allow engine to idle for 5 minutes before shutting it off after a full load operation. This allows the turbo charger to cool down before shutting the engine off. Failure to do so may lead to turbo-charger trouble.

Note: Lower cutting units to the ground whenever machine is parked. This relieves the hydraulic load from the system, prevents wear on system parts and also prevents accidental lowering of the cutting units.

1. Move the throttle control backward to the Slow position.
2. Move the PTO switch to the Off position.
3. Set the parking brake.
4. Rotate the ignition key to Off.
5. Remove the key from the switch to prevent accidental starting.

Checking the Interlock Switches

Service Interval: Before each use or daily

⚠ CAUTION

If safety interlock switches are disconnected or damaged the machine could operate unexpectedly causing personal injury.

- **Do not tamper with the interlock switches.**
- **Check the operation of the interlock switches daily and replace any damaged switches before operating the machine.**

The machine has interlock switches in the electrical system. These switches are designed to stop the engine when operator gets off of the seat when the traction pedal is depressed. However, the operator may get off of the seat while the engine is running and the traction pedal is in neutral. Although the engine will continue to run if the PTO switch is disengaged and the traction

pedal is released, it is strongly recommended that the engine be stopped before rising from the seat.

To check the operation of the interlock switches, perform the following procedure:

1. Drive the machine slowly to a large, relatively open area. Lower the cutting unit, stop the engine, and apply the parking brake.
2. Sit on the seat and depress the traction pedal. Try to start the engine. The engine should not crank. If the engine cranks, there is a malfunction in the interlock system that should be corrected before beginning operation.
3. Sit on the seat and start the engine. Rise from the seat and move the PTO switch to On. The PTO should not engage. If the PTO engages, there is a malfunction in the interlock system that should be corrected before beginning operation.
4. Sit on the seat, engage the parking brake and start the engine. Move the traction pedal out of the neutral position. The engine should kill. If the engine does not kill, there is a malfunction in the interlock system that should be corrected before beginning operation.

Setting the Reel Speed

To achieve a consistent, high quality-of-cut and a uniform after cut appearance, it is important that you set the reel speed controls (located under the seat) correctly. Adjust the reel speed controls as follows:

1. Select the height-of-cut at which the cutting units are set.
2. Choose the desired ground speed best suited for conditions.
3. Using the appropriate graph on the decal (Figure 37) determine the proper reel speed setting.

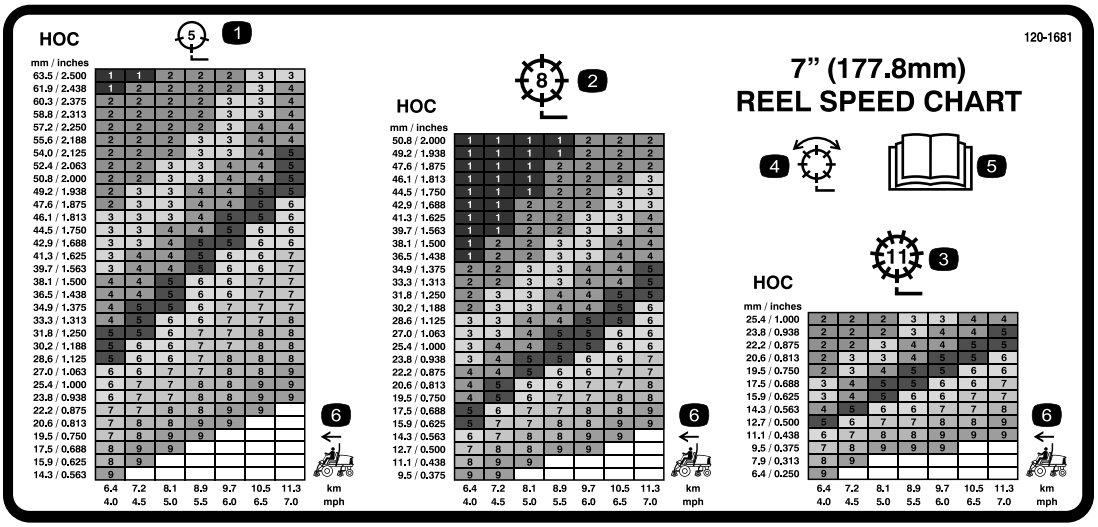

Figure 37

1. 5 blade cutting unit
2. 8 blade cutting unit
3. 11 blade cutting unit
4. Mow and backlap
5. Read the *Operator's Manual.*
6. Machine speed

To set the reel speed, rotate knobs (Figure 38) until the indicator arrows are in line with the number designating the desired setting.

Note: The reel speed can be increased or decreased to compensate for turf conditions.

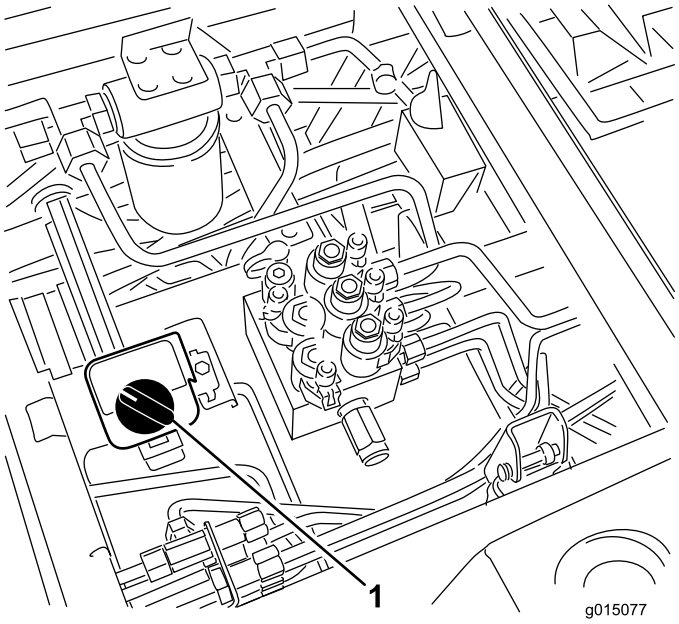

Figure 38

1. Reel speed control knob

Adjusting the Lift Arm Counterbalance

You can adjust the counterbalance on the rear cutting unit lift arms to compensate for different turf conditions and to maintain a uniform height-of-cut in the rough conditions or in areas of thatch build up.

You can adjust each counterbalance spring to one of four settings. Each increment increases or decreases counterbalance on the cutting unit by 5 lb (2.3 kg). The springs can be positioned on the back side of the spring actuator to remove all counter balance (forth position).

1. Position the machine on a level surface, lower the cutting units, stop the engine, engage the parking brakes, and remove the key from ignition switch.
2. Insert a tube or similar object onto the long spring end to relieve the spring tension during the adjustment (Figure 39).

⚠ CAUTION

The springs are under tension.

Use caution when adjusting them.

3. While relieving the spring tension, remove the bolt and locknut securing the spring actuator to the bracket (Figure 39).

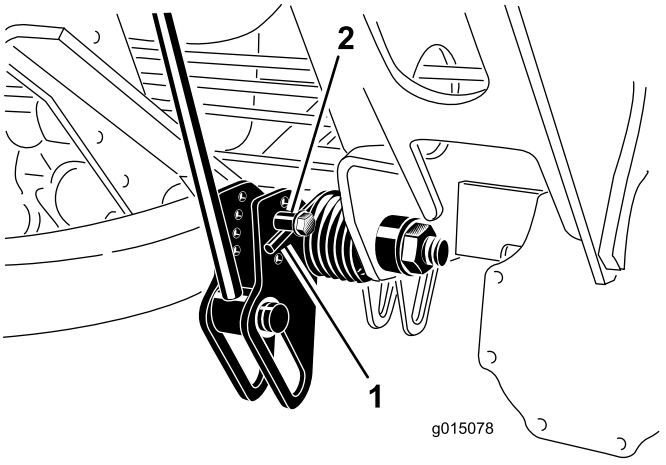

Figure 39

1. Spring
2. Spring actuator

4. Move the spring actuator to the desired hole location and secure with locknut.
5. Repeat the procedure on the remaining spring.

Adjusting the Lift Arm Turn Around Position

1. Position the machine on a level surface, lower the cutting units, stop the engine, engage the parking brakes, and remove the key from ignition switch.
2. The lift arm switch is located behind the front right lift arm (Figure 40).

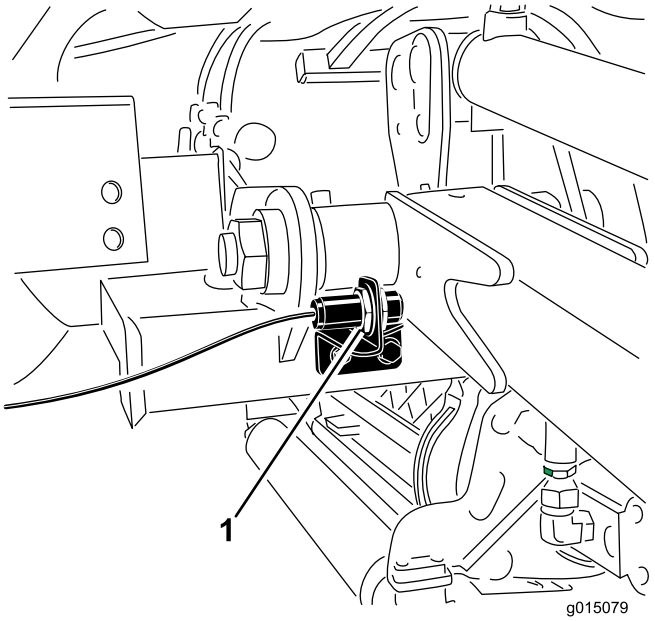

Figure 40

1. Switch

3. Loosen the switch mounting screws (Figure 40) and move the switch up to increase the lift arm

turn around height or move the switch down to decrease the lift arm turn around height. Tighten the mounting screws.

Pushing or Towing the Machine

In an emergency, the machine can be moved forward by actuating the bypass valve in the variable displacement hydraulic pump and pushing or towing the machine. Do not push or tow the machine for more than 1/4 mile (0.4 km).

Important: Do not push or tow the machine faster than 2-3 MPH (3-4.8 km/h) because internal transmission damage may occur. The bypass valve must be open whenever the machine is pushed or towed.

Important: If the machine must to be pushed or towed in reverse, the check valve in the four-wheel drive manifold must also be bypassed. To bypass the check valve, connect a hose assembly (Hose Part No. 95-8843, Coupler Fitting No. 95-0985 [Qty. 2], and Hydraulic Fitting No. 340-77 [Qty. 2]) to the reverse traction pressure test port and the reverse four-wheel drive pressure port.

1. Open hood and remove the center shroud
2. Rotate the bypass valve 90° (1/4 turn) in either direction to open and allow oil to bypass internally (Figure 41). Because fluid is bypassed, the machine can be slowly moved without damaging the transmission. Note the position of the valve when opening or closing.

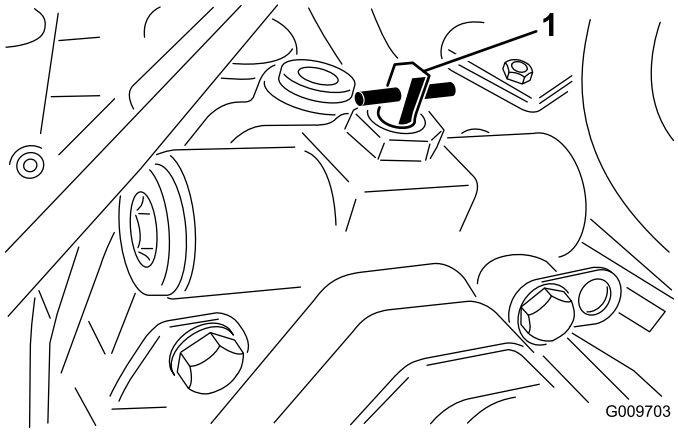

Figure 41

1. Bypass valve

3. Rotate the bypass valve 90° (1/4 turn) back before starting the engine. Do not exceed 5-8 ft.-lb. (7-11 N·m) torque to close the valve.

Jacking Points

- On the front of the machine on the frame on the inside of each drive tire
- On the rear of the machine at the center of the axle

Tie Downs

- On each side of the frame under the front steps
- The rear bumper

Understanding the Diagnostic Light

The machine is equipped with a diagnostic light which indicates if the electronic controller senses an electronic malfunction. The diagnostic light is located on the control arm (Figure 42). When the electronic controller is functioning correctly and the key switch is moved to the On position, the controller diagnostic light will turn ON for 3 seconds and turn OFF to indicate the light is working properly. If the machine kills the light will turn on steady until the key position is changed. The light will blink if the controller detects a malfunction in the electrical system. The light will stop blinking and automatically reset when the key switch is turned to the Off position once the fault has been resolved.

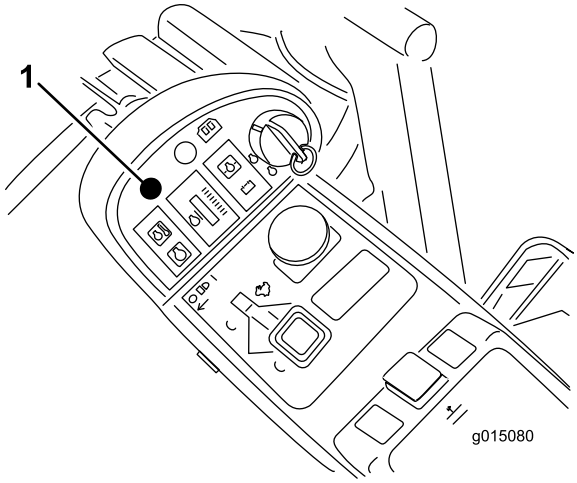

Figure 42

1. Diagnostic light

When the controller diagnostic light blinks, one of the following problems has been detected by the controller:

- One of the outputs has been shorted.
- One of the outputs is open circuited.

Using the diagnostic display, determine which output is malfunctioning; refer to Checking the Interlock Switches.

If the diagnostic light is not illuminated when the key switch is in the On position, this indicates that the electronic controller is not operating. Possible causes are as follows:

- Loop-back is not connected.
- The light is burned out.
- Fuses are blown.
- It is not functioning correctly.

Check the electrical connections, input fuses, and diagnostic light bulb to determine the malfunction. Ensure that the loop-back connector is secured to the wire harness connector.

Diagnostic Ace Display

The machine is equipped with an electronic controller which controls most machine functions. The controller determines what function is required for various input switches (i.e. seat switch, key switch, etc.) and turns on the outputs to actuate solenoids or relays for the requested machine function.

For the electronic controller to control the machine as desired, each of the input switches, output solenoids, and relays must be connected and functioning properly.

Use the Diagnostic ACE display to help verify and correct electrical functions of the machine.

Checking the Interlock Switches

The purpose of the interlock switches is to prevent the engine from cranking or starting unless the traction pedal is in the Neutral position, the PTO switch is in the OFF position, and the lift switch is in the Neutral position. In addition, the engine should stop when the traction pedal is pressed with operator off of the seat or if the parking brake is left engaged.

⚠ CAUTION

If safety interlock switches are disconnected or damaged the machine could operate unexpectedly causing personal injury.

- **Do not tamper with the interlock switches.**
- **Check the operation of the interlock switches daily and replace any damaged switches before operating the machine.**

Verifying the Interlock Switch Function

1. Park the machine on a level surface, lower the cutting units, stop the engine, and engage the parking brake.
2. Remove the access panel located beneath the front of the seat (Figure 43).
3. Locate the wire harness and connectors near the controller (Figure 43).

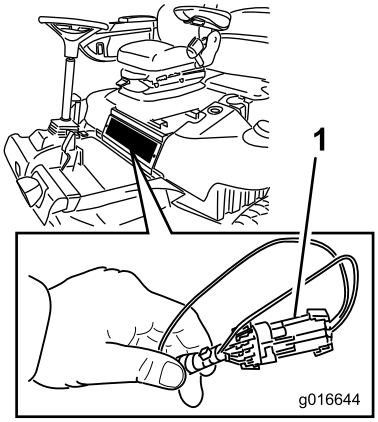

Figure 43

1. Wire harness and connectors

4. Carefully unplug loop back connector from harness connector.
5. Connect the Diagnostic ACE display connector to the harness connector (Figure 44).

   Note: Make sure correct overlay decal is positioned on Diagnostic ACE display.

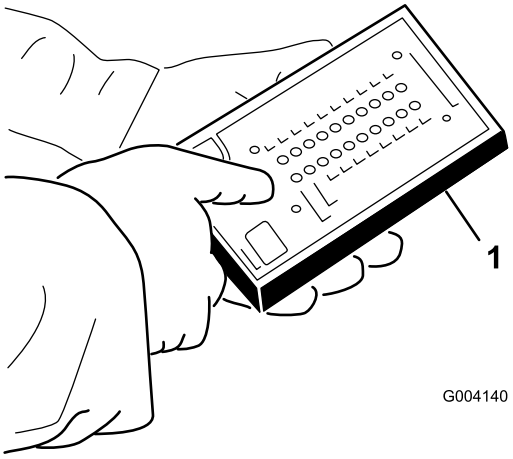

Figure 44

1. Diagnostic ACE

6. Turn the key switch to the On position, but do not start the machine.

   Note: The red text on the overlay decal refers to input switches and the green text refers to outputs.

7. The “inputs displayed” LED, on the lower right column of the Diagnostic ACE, should be illuminated. If the “outputs displayed” LED is illuminated, press the toggle button, on Diagnostic ACE, to change LED to “inputs displayed”.

   The Diagnostic ACE will illuminate the LED associated with each of the inputs when that input switch is closed.

8. Individually, change each of the switches from open to closed (i.e., sit on seat, engage traction pedal, etc.), and note that the appropriate LED on Diagnostic ACE will blink on and off when corresponding switch is closed. Repeat this for all switches that you can change by hand.
9. If a switch is closed and the appropriate LED does not turn on, check all wiring and connections to the switch and/or check the switches with an ohm meter. Replace any defective switches and repair any defective wiring.

Note: The Diagnostic ACE also has the ability to detect which output solenoids or relays are turned on. This is a quick way to determine if a machine malfunction is electrical or hydraulic.

Verifying Output Function

1. Park the machine on a level surface, lower the cutting units, stop the engine, and engage the parking brake.
2. Remove the access panel located beneath the front of the seat.
3. Locate wire harness and connectors near controller.
4. Carefully unplug loopback connector from harness connector.
5. Connect the Diagnostic ACE connector to the harness connector.

   Note: Make sure correct overlay decal is positioned on Diagnostic ACE.

6. Turn the key switch to the ON position, but do not start machine.

   Note: The red text on the overlay decal refers to input switches and the green text refers to outputs.

7. The “outputs displayed” LED, on lower right column of Diagnostic ACE, should be illuminated. If the “inputs displayed” LED is illuminated, press the toggle button, on the Diagnostic ACE, to change the LED to “outputs displayed”.

   Note: It may be necessary to toggle between “inputs displayed” and “outputs displayed” several times to do the following step. To toggle back and forth, press the toggle button once. This may be done as often as required. Do not hold the button.

8. Sit on the seat and attempt to operate the desired function of the machine. The appropriate output LEDs should illuminate to indicate that the ECM is turning on that function.

Note: If the correct output LEDs do not illuminate, verify that the required input switches are in the necessary positions to allow that function to occur. Verify correct switch function.

If the output LEDs are on as specified, but the machine does not function properly, this indicates a non-electrical problem. Repair as necessary.

Note: If each output switch is in the correct position and functioning correctly, but the output LEDs are not correctly illuminated, this indicates an ECM problem. If this occurs, contact your Toro Distributor for assistance.

Important: The Diagnostic ACE display must not be left connected to the machine. It is not designed to withstand the environment of the machine's every day use. When done using the Diagnostic ACE, disconnect it from the machine and connect loop-back connector to harness connector. The machine will not operate without loopback connector installed on the harness. Store the Diagnostic ACE in dry, secure location in the shop, not on the machine.

Operating Characteristics

Practice driving the machine because it has a hydrostatic transmission and its characteristics are different than many turf maintenance machines. Some points to consider when operating the traction unit and cutting units are the transmission, engine speed, load on the cutting blades and the importance of the brakes.

To maintain enough power for the traction unit while operating, regulate the traction pedal to keep the engine RPM high and somewhat constant. A good rule to follow is to decrease the ground speed as the load on the cutting units increases, and increase the ground speed as the load decreases.

Therefore, allow the traction pedal to move backward as the engine RPM decreases, and depress the pedal slowly as the RPM increases. By comparison, when driving from one work area to another, with no load and cutting unit raised, have the throttle in the Fast position and depress the traction pedal slowly but fully to attain maximum ground speed.

Another characteristic to consider is the operation of the pedals that are connected to the brakes. The

brakes can be used to assist in turning the machine. However, use them carefully, especially on soft or wet grass because the turf may be torn accidentally. Another benefit of the brakes is to maintain traction. For example, in some slope conditions, the uphill wheel slips and loses traction. If this situation occurs, depress the uphill turn pedal gradually and intermittently until the uphill wheel stops slipping, thus, increasing traction on the downhill wheel.

Use extra care when operating the machine on slopes. Make sure that the seat latch is properly secured and the seat belt is buckled. Drive slowly and avoid sharp turns on slopes to prevent roll overs. For steering control, the cutting unit must be lowered when going downhill.

Important: Allow engine to idle for 5 minutes before shutting it off after a full load operation. This allows the turbo charger to cool down before shutting the engine off. Failure to do so may lead to turbo-charger trouble.

Before stopping the engine, disengage all controls and move the throttle to Slow. Moving the throttle to Slow reduces high engine RPM, noise, and vibration. Turn the key to Off to stop the engine.

Engine Cooling Fan Operation

The engine cooling fan switch has two positions for controlling the operation of the fan. The two positions are R and Auto. The fan has the ability to reverse to blow debris off of the rear screen. Under normal operating conditions, the switch should be in the Auto position. In Auto, the fan speed will be controlled by the coolant or hydraulic oil temperature and will automatically reverse to blow debris off of the rear screen. A reverse cycle is automatically initiated when either the coolant or hydraulic temperature reaches a certain point. By pressing the fan switch forward into the R position, the fan will complete a manually initiated reverse cycle. It is recommended to reverse the fan when the rear screen is clogged or prior to entering the shop or the storage area.

Operating Tips

Familiarization

Before mowing grass, practice operating the machine in an open area. Start and stop the engine. Operate in forward and reverse. Lower and raise the cutting units and engage and disengage the reels. When you feel familiar with the machine, practice operating up and down slopes at different speeds.

Warning System

If a warning light comes on during operation, stop the machine immediately and correct the problem before continuing operation. Serious damage could occur if you operate the machine with a malfunction.

Mowing

Start the engine and move the throttle to the Fast position. Move the Mow Speed Limiter to the mow position. Move the PTO switch to the ON position and use the Lift Switch to control the cutting units (the front cutting units are timed to lower before the rear cutting units). To move forward and cut grass, press the traction pedal forward.

Transport

Move the PTO switch to the OFF position and raise the cutting units to the transport position. Move the Mow Speed Limiter to the transport position. Be careful when driving between objects so you do not accidentally damage the machine or cutting units. Use extra care when operating the machine on slopes. Drive slowly and avoid sharp turns on slopes to prevent roll overs. Lower the cutting units when going downhill for steering control.

Maintenance

Note: Determine the left and right sides of the machine from the normal operating position.

Recommended Maintenance Schedule(s)

Maintenance Service Interval	Maintenance Procedure
After the first 8 hours	• Torque the wheel nuts.
After the first 50 hours	• Change the engine oil and filter.
After the first 200 hours	• Change the planetary gear drive oil. • Change the rear axle lubricant. • Change the hydraulic filters.
Before each use or daily	• Check the engine oil level. • Check the cooling system. • Check the hydraulic fluid level. • Check the tire pressure. • Check the interlock switches. • Check the operation of the interlock switches. • Drain water or other contaminants from the water separator. • Drain water or other contaminants from fuel filter/water separator. • Remove debris from the engine area, oil cooler, and radiator. • Inspect the hydraulic lines and hoses for leaks, kinked lines, loose mounting supports, wear, loose fittings, weather deterioration, and chemical deterioration.
Every 50 hours	• Grease the bearings and bushings. • Check the battery condition.
Every 100 hours	• Check the condition and tension of the alternator belt.
Every 150 hours	• Change the engine oil and filter.
Every 200 hours	• Torque the wheel nuts. • Clean the spark arrestor muffler.
Every 400 hours	• Service the air cleaner. (Service the air cleaner earlier if the air cleaner indicator shows red. Service it more frequently in extremely dirty or dusty conditions.) • Check the fuel lines and connections. • Replace the fuel filter canister. • Check the planetary gear drive oil level (sooner if external leakage is noticed). • Check the rear axle lubricant level.
Every 800 hours	• Drain and clean the fuel tank. • Change the planetary gear drive oil. • Change the rear axle lubricant. • Check the rear wheel toe-in. • Change the hydraulic fluid. • Change the hydraulic filters.
Before storage	• Drain and clean the fuel tank. • Check the tire pressure. • Check all fasteners. • Grease or oil all grease fittings and pivot points. • Paint chipped surfaces.
Yearly	• Check the fuel lines and connections. • Change the planetary gear drive oil.

Important: **Refer to your engine *Operator's Manual* and cutting unit *Operator's Manual* for additional maintenance procedures.**

Daily Maintenance Checklist

Duplicate this page for routine use.

Maintenance Check Item	For the week of:						
	Mon.	Tues.	Wed.	Thurs.	Fri.	Sat.	Sun.
Check the safety interlock operation							
Check the brake operation							
Check the engine oil and fuel level							
Check the cooling system fluid level							
Drain the water/fuel separator							
Check the air filter restriction indicator							
Check the radiator, oil cooler, and screen for debris							
Check unusual engine noises [1]							
Check unusual operating noises							
Check the hydraulic system oil level							
Check hydraulic hoses for damage							
Check for fluid leaks							
Check the tire pressure							
Check the instrument operation							
Check the reel-to-bedknife adjustment							
Check the height-of-cut adjustment							
Lubricate all grease fittings [2]							
Touch-up damaged paint.							

1. Check the glow plug and injector nozzles if hard starting, excess smoke, or rough running is noted.

2. Immediately after every washing, regardless of the interval listed.

Service Interval Chart

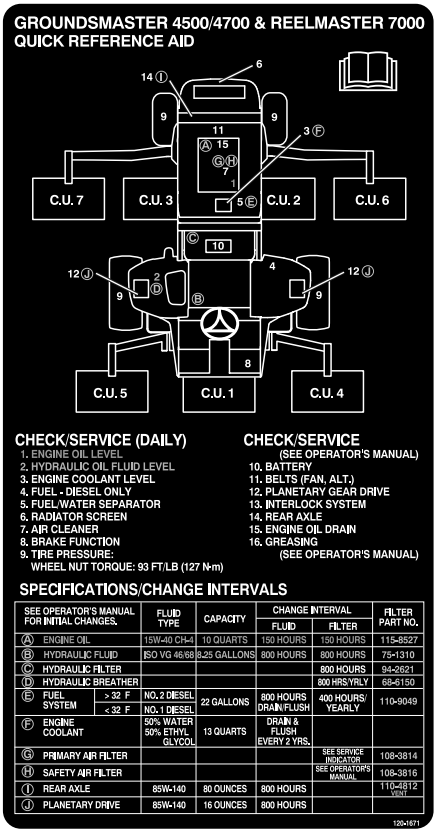

Figure 45

⚠ CAUTION

If you leave the key in the ignition switch, someone could accidently start the engine and seriously injure you or other bystanders.

Remove the key from the ignition before you do any maintenance.

Premaintenance Procedures

Removing the Hood

1. Release hood latches (Figure 46) and pivot open the hood.

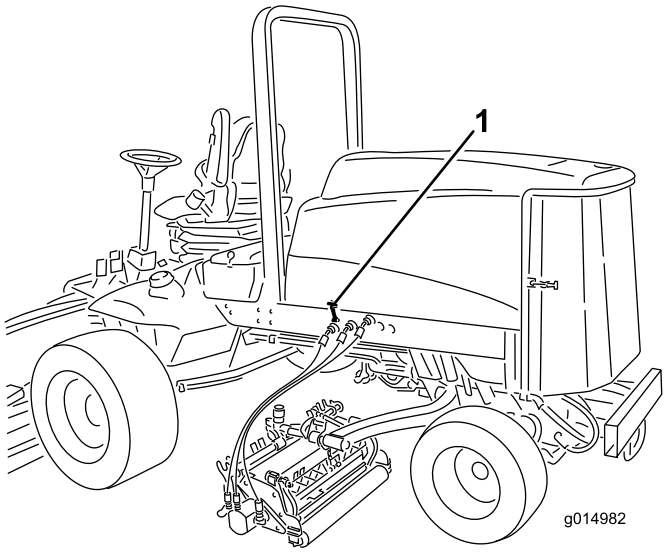

Figure 46

1. Hood latch (2)

2. Remove the cotter pins securing the rear hood brackets to the frame pins and lift off the hood.

Lubrication

Greasing the Bearings and Bushings

Service Interval: Every 50 hours

The machine has grease fittings that must be lubricated regularly with No. 2 General Purpose Lithium Base Grease. If the machine is operated under normal conditions, lubricate all bearings and bushings after every 50 hours of operation or immediately after every washing.

The grease fitting locations and quantities are as follows:

- Brake shaft pivot bearings (5) (Figure 47)

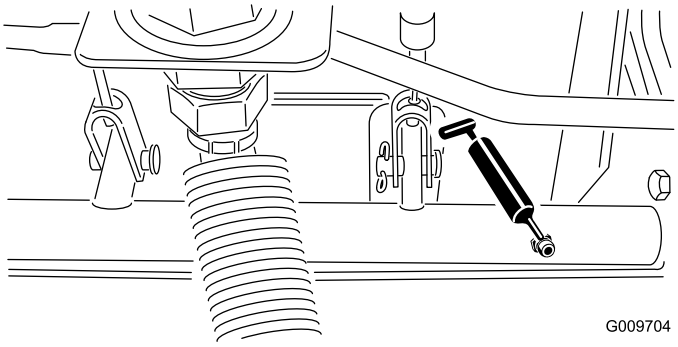

Figure 47

- Rear axle pivot bushings (2) (Figure 48)

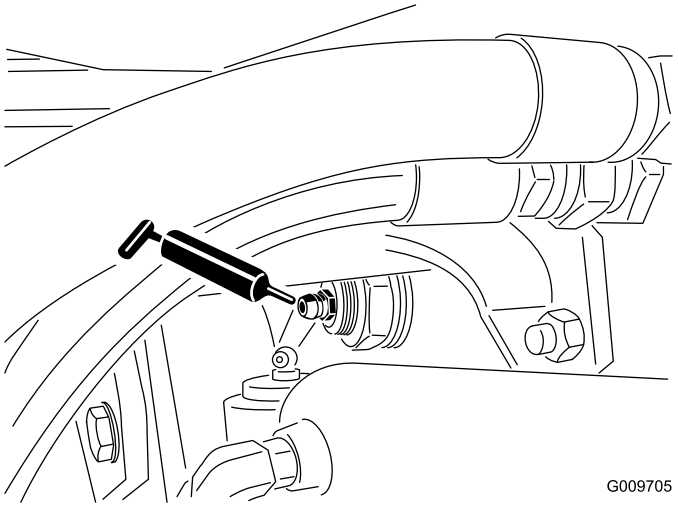

Figure 48

- Steering cylinder ball joints (2) (Figure 49)

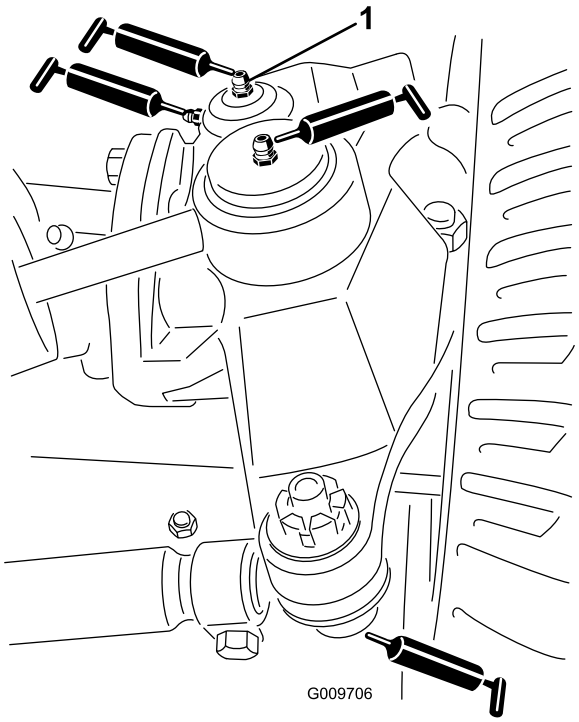

Figure 49

1. Top fitting on king pin

- Tie rod ball joints (2) (Figure 49)
- King pin bushings (2) (Figure 49). **The top fitting on the king pin should only be lubricated annually (2 pumps).**
- Lift arm bushings (1 per cutting unit) (Figure 50)

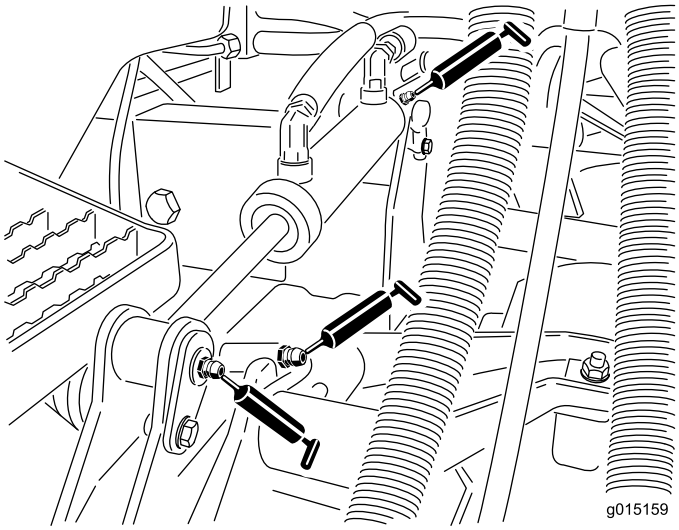

Figure 50

- Lift cylinder bushings (2 per cutting unit) (Figure 50)
- Lift arm pivot bushings (1 per cutting unit) (Figure 51)
- Cutting unit carrier frame (2 per cutting unit) (Figure 51)
- Cutting unit lift arm pivot (1 per cutting unit) (Figure 51)

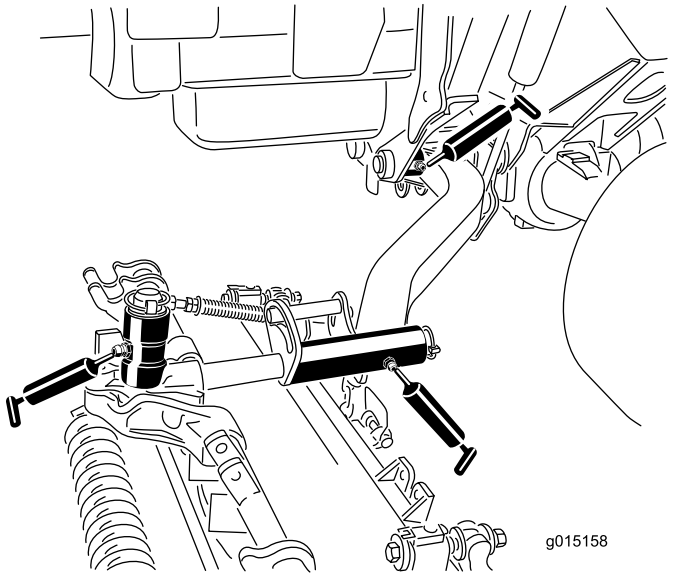

Figure 51

Engine Maintenance

Servicing the Air Cleaner

Service Interval: Every 400 hours

Check the air cleaner body for damage which could cause an air leak. Replace if damaged. Check the whole intake system for leaks, damage or loose hose clamps.

Service the air cleaner filter only when the service indicator (Figure 52) requires it. Changing the air filter before it is necessary only increases the chance of dirt entering the engine when the filter is removed.

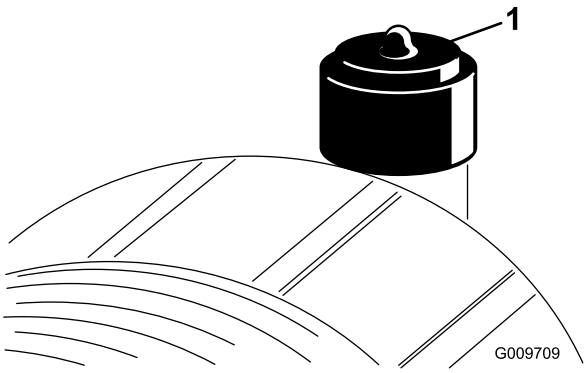

Figure 52

1. Air cleaner indicator

Important: Be sure the cover is seated correctly and seals with the air cleaner body.

1. Pull the latch outward and rotate the air cleaner cover counterclockwise (Figure 53).

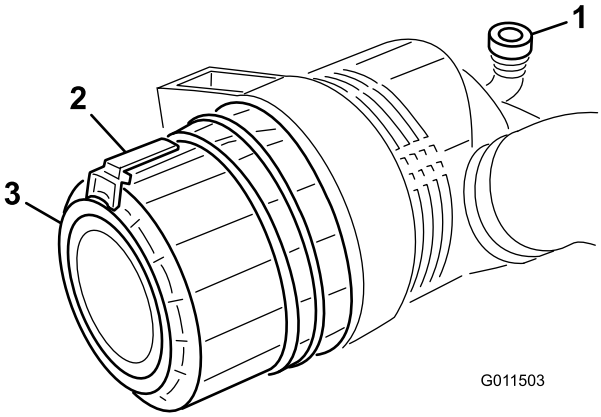

Figure 53

1. Air cleaner indicator
2. Air cleaner latch
3. Air cleaner cover

2. Remove the cover from the air cleaner body. Before removing the filter, use low pressure air (40 psi, clean and dry) to help remove large accumulations of debris packed between outside of primary filter and the canister. **Avoid using high pressure air which could force dirt through the filter into the intake tract.**

   This cleaning process prevents debris from migrating into the intake when the primary filter is removed.

3. Remove and replace the primary filter (Figure 54).

   Cleaning of the used element is not recommended due to the possibility of damage to the filter media. Inspect the new filter for shipping damage, checking the sealing end of the filter and the body. **Do not use a damaged element.** Insert the new filter by applying pressure to the outer rim of the element to seat it in the canister. **Do not apply pressure to the flexible center of the filter.**

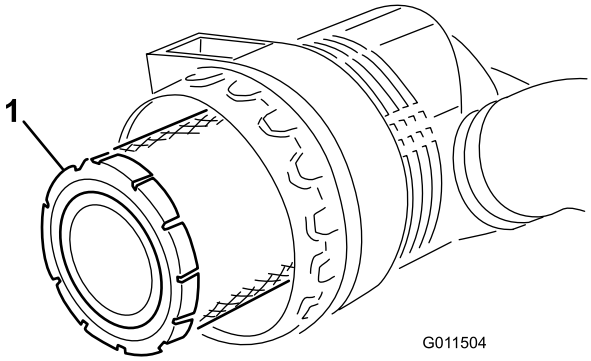

Figure 54

1. Air cleaner primary filter

Important: Never attempt to clean the safety filter (Figure 55). Replace the safety filter with a new one after every three primary filter services.

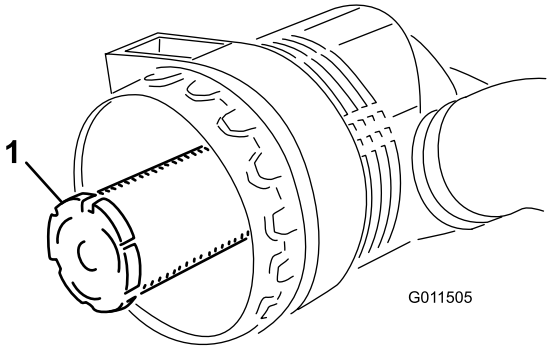

Figure 55

1. Air cleaner safety filter

4. Clean the dirt ejection port located in the removable cover. Remove the rubber outlet valve from the cover, clean the cavity and replace the outlet valve.
5. Install the cover orienting the rubber outlet valve in a downward position—between approximately 5:00 to 7:00 when viewed from the end.
6. Reset the indicator (Figure 52) if it shows red.

Servicing the Engine Oil and Filter

Service Interval: After the first 50 hours

Every 150 hours

Change the oil and filter initially after the first 50 hours of operation; thereafter change the oil and filter every 150 hours.

1. Remove the rear drain plug (Figure 56) and let the oil flow into a drain pan. When the oil stops, install the drain plug.

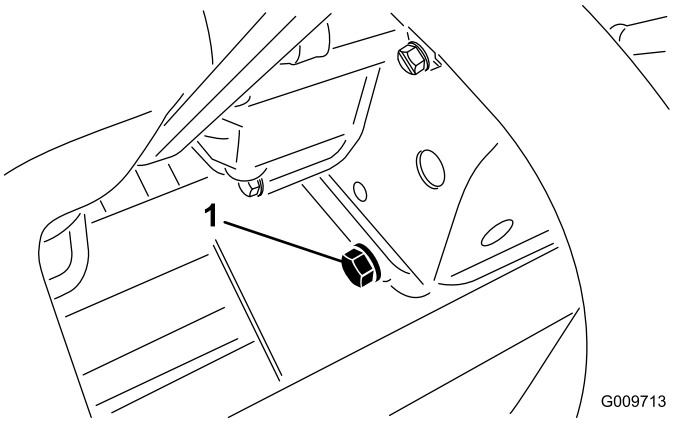

Figure 56

1. Engine oil drain plug

2. Remove the oil filter (Figure 57). Apply a light coat of clean oil to the new filter seal before screwing it on. Do not overtighten.

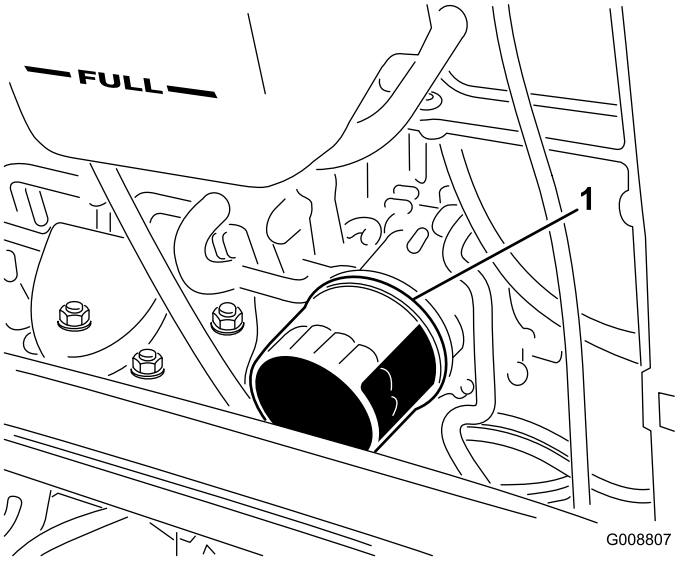

Figure 57

1. Engine oil filter

3. Add oil to the crankcase; refer to Checking the Engine Oil in Operation.

Adjusting the Throttle

Adjust the throttle cable (Figure 58) so that the governor lever on the engine contacts the high speed set bolt at the same point that the throttle cable contacts the end of the slot in the control arm.

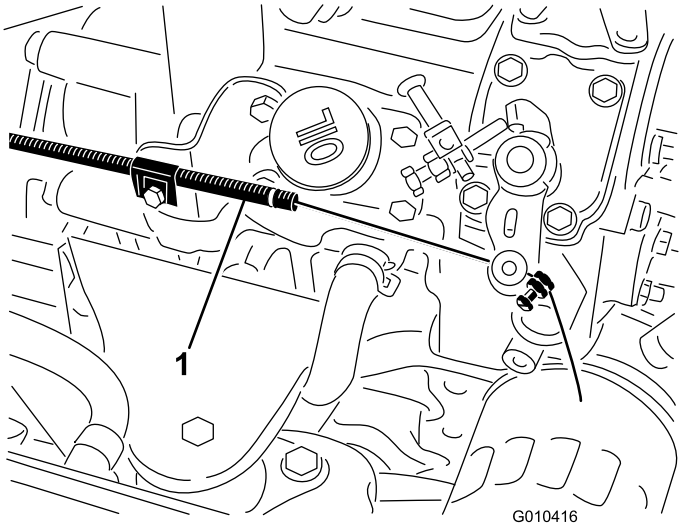

Figure 58

1. Throttle cable

Fuel System Maintenance

⚠ DANGER

Under certain conditions, diesel fuel and fuel vapors are highly flammable and explosive. A fire or explosion from fuel can burn you and others and can cause property damage.

- **Fill the fuel tank outdoors, in an open area, when the engine is off and is cold. Wipe up any fuel that spills.**
- **Do not fill the fuel tank completely full. Add fuel to the fuel tank until the level is 1 in. (25 mm) below the top of the tank, not the filler neck. This empty space in the tank allows the fuel to expand.**
- **Never smoke when handling fuel, and stay away from an open flame or where fuel fumes may be ignited by a spark.**
- **Store fuel in a clean, safety-approved container and keep the cap in place.**

Fuel Tank

Every 800 hours—Drain and clean the fuel tank.

Before storage—Drain and clean the fuel tank.

Drain and clean the fuel tank every 800 hours. Also, drain and clean the tank if fuel system becomes contaminated or if the machine will be stored for an extended period of time. Use clean fuel to flush out the tank.

Fuel Lines and Connections

Service Interval: Every 400 hours—Check the fuel lines and connections.

Yearly—Check the fuel lines and connections.

Check the fuel lines and connections every 400 hours or yearly, whichever comes first. Inspect them for deterioration, damage, or loose connections.

Servicing the Water Separator

Service Interval: Before each use or daily—Drain water or other contaminants from fuel filter/water separator.

Every 400 hours—Replace the fuel filter canister.

Drain water or other contaminants from water separator daily. Replace filter canister after every 400 hours of operation.

1. Place a clean container under the fuel filter(Figure 59).
2. Loosen the drain plug on the bottom of the filter canister.

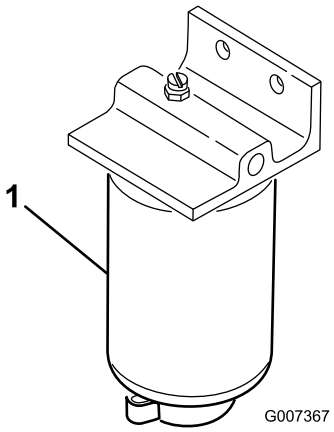

Figure 59

1. Water separator filter canister

3. Clean the area where the filter canister mounts.
4. Remove the filter canister and clean the mounting surface.
5. Lubricate the gasket on the filter canister with clean oil.
6. Install the filter canister by hand until the gasket contacts mounting surface, then rotate it an additional 1/2 turn.
7. Tighten the drain plug on the bottom of the filter canister.

Fuel Pick up Tube Screen

The fuel pick up tube, located inside the fuel tank, is equipped with a screen to help prevent debris from entering the fuel system. Remove fuel pick up tube and clean screen as required.

Bleeding Air from the Injectors

Note: This procedure should be used only if the fuel system has been purged of air through normal priming procedures and the engine will not start.

1. Loosen the pipe connection to the No. 1 injector nozzle and holder assembly at the injection pump (Figure 60).

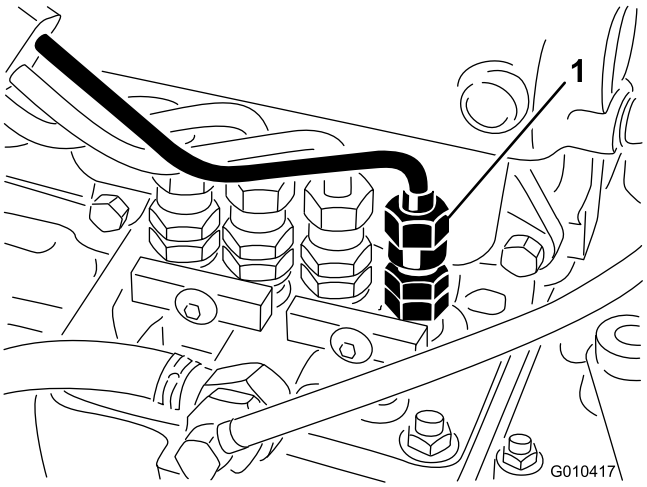

Figure 60

1. No. 1 injector nozzle

2. Move the throttle to the Fast position.
3. Turn the key in the ignition switch to the Start position and watch the fuel flow around the connector. Turn the key to the Off position when solid flow is observed.
4. Tighten the pipe connector securely.
5. Repeat the procedure on the remaining nozzles.

Electrical System Maintenance

Charging and Connecting the Battery

WARNING

CALIFORNIA
Proposition 65 Warning

Battery posts, terminals, and related accessories contain lead and lead compounds, chemicals known to the State of California to cause cancer and reproductive harm. Wash hands after handling.

1. Unlatch and raise the operator's console panel (Figure 61).

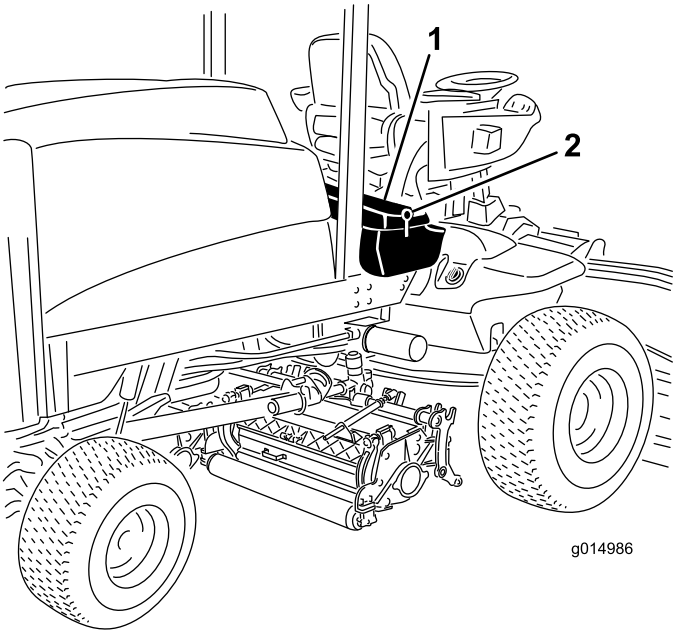

Figure 61

1. Operator's console panel 2. Latch

⚠ DANGER

Battery electrolyte contains sulfuric acid which is a deadly poison and causes severe burns.

- **Do not drink electrolyte and avoid contact with skin, eyes or clothing. Wear safety glasses to shield your eyes and rubber gloves to protect your hands.**
- **Fill the battery where clean water is always available for flushing the skin.**

2. Connect a 3 to 4 amp. battery charger to the battery posts. Charge the battery at a rate of 3 to 4 amperes for 4 to 8 hours.
3. When the battery is charged, disconnect the charger from the electrical outlet and battery posts.

⚠ WARNING

Charging the battery produces gasses that can explode.

Never smoke near the battery and keep sparks and flames away from battery.

4. Install the positive cable (red) to the positive (+) terminal and the negative cable (black) to the negative (-) terminal of the battery (Figure 62). Secure cables to posts with capscrews and nuts. Make sure that the positive (+) terminal is all of the way onto the post and the cable is positioned snug to the battery. The cable must not contact the battery cover. Slide the rubber boot over the positive terminal to prevent a possible short from occurring.

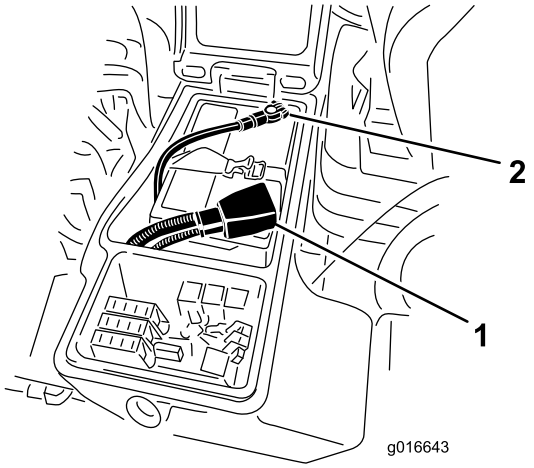

Figure 62

1. Positive battery cable
2. Negative battery cable

WARNING

CALIFORNIA
Proposition 65 Warning

Battery posts, terminals, and related accessories contain lead and lead compounds, chemicals known to the State of California to cause cancer and reproductive harm. Wash hands after handling.

5. Coat both battery connections with Grafo 112X (skin-over) grease, Toro Part No. 505-47, petroleum jelly, or light grease to prevent corrosion. Slide the rubber boot over the positive terminal.
6. Close the console panel and secure the latch.

⚠ WARNING

Battery terminals or metal tools could short against metal components causing sparks. Sparks can cause the battery gasses to explode, resulting in personal injury.

- **When removing or installing the battery, do not allow the battery terminals to touch any metal parts of the machine.**
- **Do not allow metal tools to short between the battery terminals and metal parts of the machine.**

⚠ WARNING

Incorrect battery cable routing could damage the machine and cables causing sparks. Sparks can cause the battery gasses to explode, resulting in personal injury.

- **Always disconnect the negative (black) battery cable before disconnecting the positive (red) cable.**
- **Always connect the positive (red) battery cable before connecting the negative (black) cable.**

Battery Care

Service Interval: Every 50 hours

Important: Before welding on the machine, disconnect the negative cable from the battery to prevent damage to the electrical system.

Note: Check the battery condition weekly or after every 50 hours of operation. Keep the terminals and the entire battery case clean because a dirty battery will discharge slowly. To clean the battery, remove it from the machine, wash the entire case with a solution of baking soda and water. Rinse with clear water. Coat the battery posts and cable connectors with Grafo 112X (skin-over) grease (Toro Part No. 505-47) or petroleum jelly to prevent corrosion.

Fuses

The fuses are located under the operators control panel.

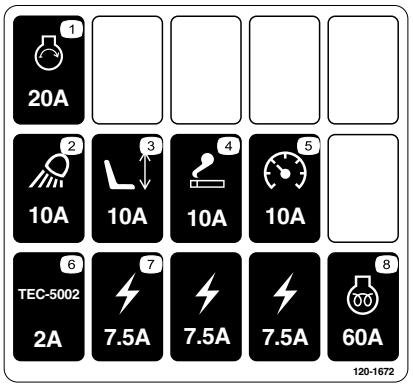

Figure 63

Unhook the latch and raise the operator's console panel (Figure 64) to expose the fuses (Figure 65).

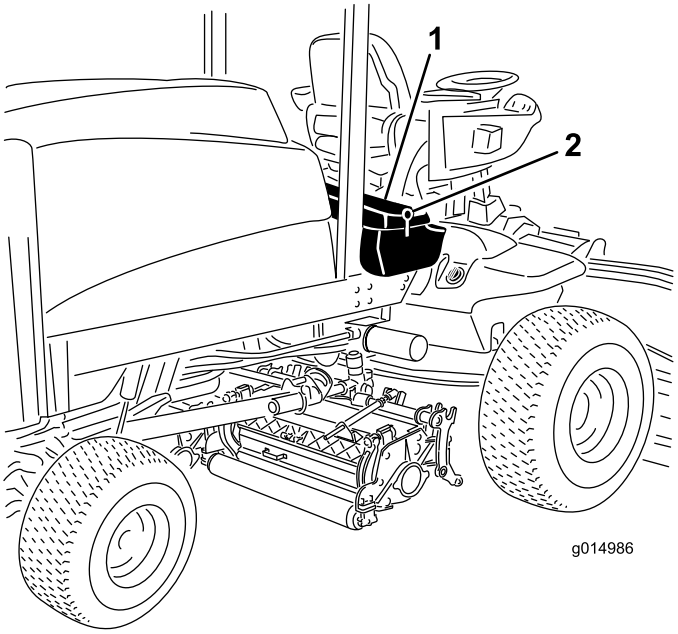

Figure 64

1. Operator's console panel 2. Latch

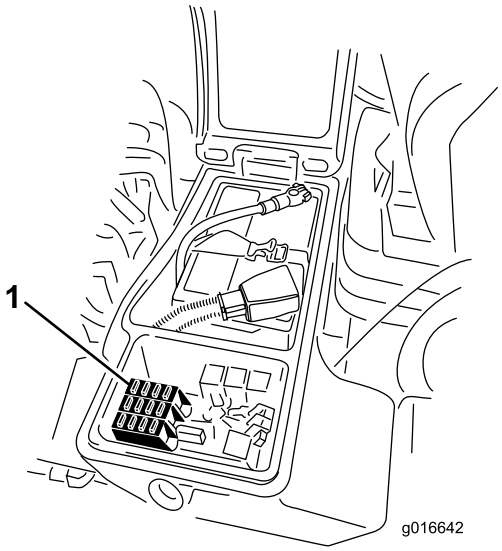

Figure 65

1. Fuses

Drive System Maintenance

Checking the Torque of the Wheel Nuts

Service Interval: After the first 8 hours

Every 200 hours

⚠ WARNING

Failure to maintain proper torque of the wheel nuts could result in failure or loss of wheel and may result in personal injury.

Torque the front and rear wheel nuts to 85-100 ft.-lb. (115-136 N m) after 1-4 hours of operation and again after 8 hours of operation. Torque every 200 hours thereafter.

Note: Front wheel nuts are 1/2-20 UNF. Rear wheel nuts are M12 x 1.6-6H (Metric).

Checking the Planetary Gear Drive Oil

Service Interval: Every 400 hours

Check the oil level after every 400 hours of operation or if external leakage is noted. Use high quality SAE 85W-140 wt. gear lube as a replacement.

The capacity of the system is approximately 16 oz. (0.5 l).

1. With the machine on a level surface, position the wheel so that the check/drain plug (Figure 66) is at either the 3 or 9 o'clock position.

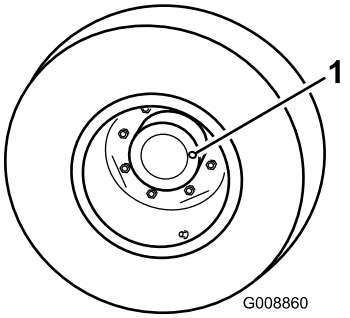

Figure 66

1. Check/drain plug (3 or 9 o'clock position)

2. Remove the plug on the planetary (Figure 66). Oil should be at the bottom of the check plug hole on the back side of the brake.
3. Add gear oil to the hole in the planetary, if necessary, to bring the oil up to the proper level. Install the plug.
4. Repeat steps 1–3 on the opposite gear assembly.

Changing the Planetary Gear Drive Oil

Service Interval: After the first 200 hours

Every 800 hours

Yearly

Change the oil initially after first 200 hours of operation. Thereafter change the oil every 800 hours, or yearly, whichever occurs first. Use a high quality SAE 85W-140 wt. gear lube.

1. With the machine on a level surface, position the wheel so that the check/drain plug (Figure 67) is at the 6 o'clock position.

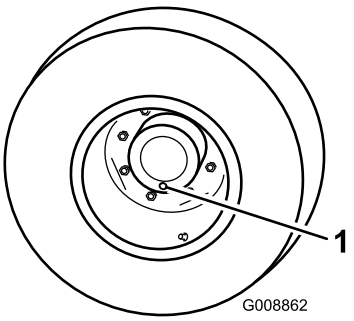

Figure 67

1. Check/drain plug (6 o'clock position)

2. Place a drain pan under the hub, remove the plug, and allow the oil to drain.
3. Place another drain pan under the brake housing on the other side of the wheel (Figure 68).

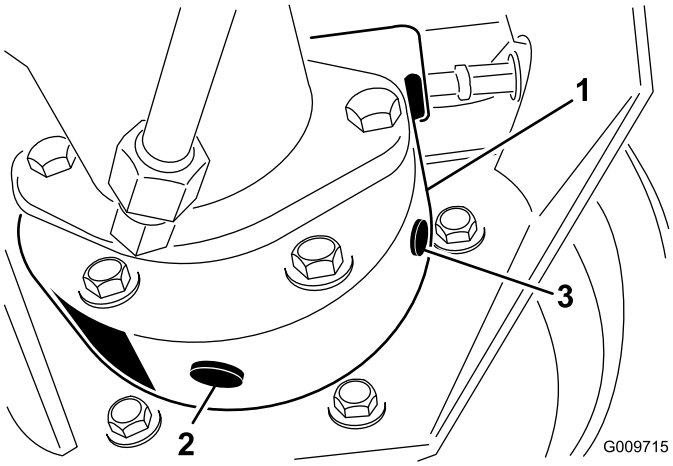

Figure 68

1. Brake housing
2. Drain plug
3. Check plug

4. Remove check/drain plugs from the brake housing and allow the oil to drain.
5. When all of the oil has drained, install the bottom plug in the brake housing.
6. Position the wheel so that the plug hole is at the 3 or 9 o'clock position on the planetary.
7. Slowly add approximately 16 oz. (0.5 l) of high quality SAE 85W-140 wt. gear lube to the planetary fill hole (at the ten or two o'clock position) until the level is up to the bottom of the brake housing check hole. Install the plug.
8. Repeat the procedure on the opposite planetary/brake assembly.

Checking the Rear Axle Lubricant

Service Interval: Every 400 hours

The rear axle is shipped from the factory filled with SAE 85W-140 wt. gear lube. Check the oil level before the engine is first started and every 400 hours thereafter. The capacity is 80 oz. (2.4 l). Visually inspect for leaks daily.

1. Position the machine on a level surface.
2. Remove a check plug from one end of the axle (Figure 69) and make sure that the lubricant is up to the bottom of the hole. If the level is low, remove the fill plug (Figure 69) and add enough lubricant to bring the level up to the bottom of the check plug holes.

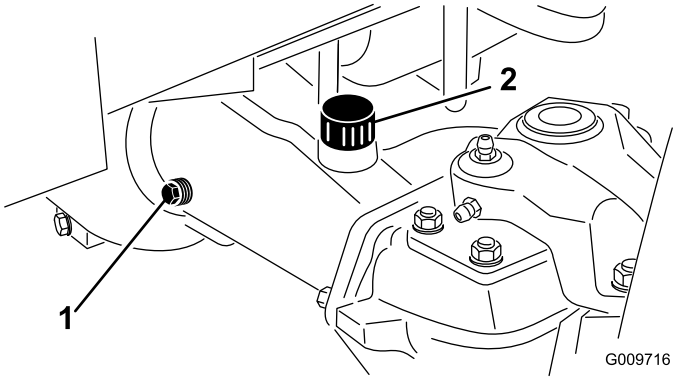

Figure 69

1. Check plug
2. Fill plug

Changing the Rear Axle Lubricant

Service Interval: After the first 200 hours

Every 800 hours

1. Position the machine on a level surface.
2. Clean the area around the 3 drain plugs, 1 on each end and 1 in the center (Figure 70).

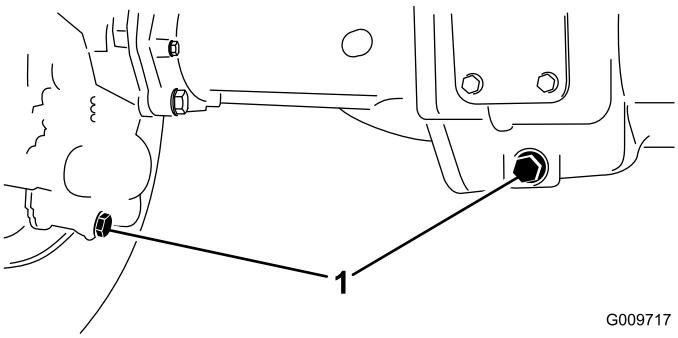

Figure 70

1. Drain plug location

3. Remove the (3) oil level check plugs and main axle vent cap to ease in draining of the oil.
4. Remove the drain plugs and allow the oil to drain into the pans.
5. Install the plugs.
6. Remove a check plug and fill axle with approximately 80 oz. of 85W-140 gear lube or until lubricant is up to bottom of hole.
7. Install check plug.

Adjusting the Traction Drive for Neutral

The machine must not creep when traction pedal is released. If it does creep, an adjustment is required.

1. Park machine on a level surface, shut engine off, position speed control into LOW range and lower cutting units to the floor. Depress only the right brake pedal and engage the parking brake.
2. Jack up left side of machine until left front tire is off the shop floor. Support machine with jack stands to prevent it from falling accidentally.
3. Start engine and allow run at low idle.
4. Adjust jam nuts on pump rod end to move pump control tube forward to eliminate forward creep or rearward to eliminate rearward creep (Figure 71).

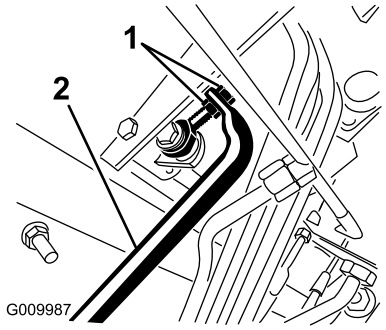

Figure 71

1. Pump rod jam nuts
2. Pump control tube

5. After wheel rotation ceases, tighten jam nuts to secure adjustment.
6. Stop the engine and release the right brake. Remove jack stands and lower the machine to the shop floor. Test drive the machine to make sure it does not creep.

Checking the Rear Wheel Toe-In

Service Interval: Every 800 hours/Yearly (whichever comes first)

1. Measure the center-to-center distance (at axle height) at the front and rear of the steering tires. The front measurement must be 1/8 in. (3 mm) less than the rear measurement (Figure 72).

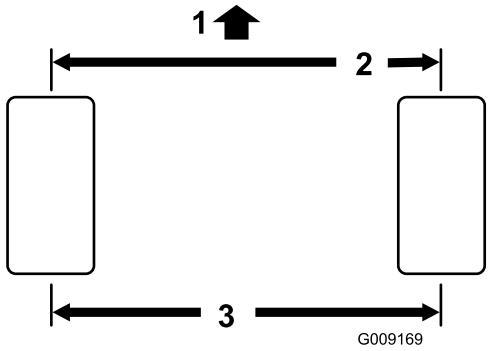

Figure 72

1. Front of traction unit
2. 1/8 inch less than rear of tire
3. Center to center distance

2. To adjust, remove the cotter pin and nut from either tie rod ball joint (Figure 73). Remove tie rod ball joint from axle case support.

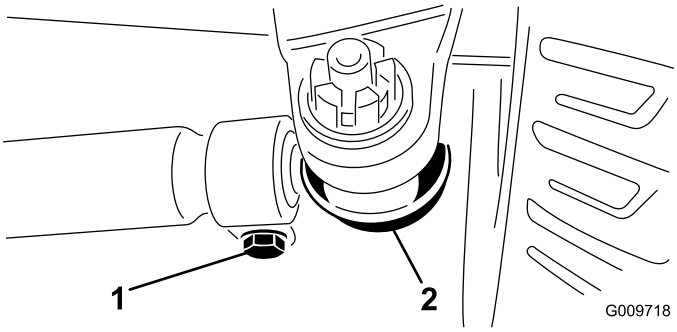

Figure 73

1. Tie rod clamp
2. Tie rod ball joint

3. Loosen the clamps at both ends of the tie rods (Figure 73).
4. Rotate the detached ball joint inward or outward one (1) complete revolution. Tighten clamp at loose end of tie rod.
5. Rotate the entire tie rod assembly the same direction (inward or outward) one (1) complete revolution. Tighten clamp at connected end of tie rod.
6. Install the ball joint in the axle case support and tighten the nut finger tight. Measure toe-in.
7. Repeat procedure if necessary.
8. Tighten the nut and install a new cotter pin when the adjustment is correct.

Cooling System Maintenance

Servicing the Engine Cooling System

Service Interval: Before each use or daily

Remove debris from the engine area, oil cooler and radiator daily. Clean them more frequently in dirty conditions.

1. Unlatch and swing open rear screen (Figure 74). Clean the screen thoroughly of all debris.

   Note: To remove the screen, lift off the hinge pins.

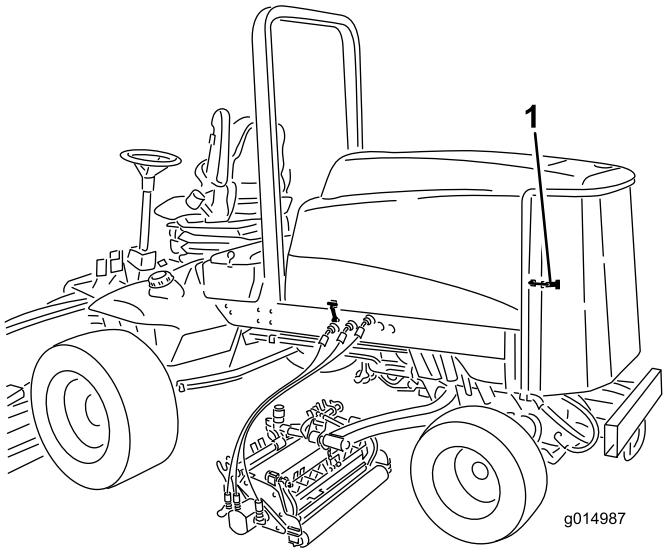

Figure 74

1. Rear screen latch

2. Rotate the latches (Figure 75) securing the oil cooler to the frame.

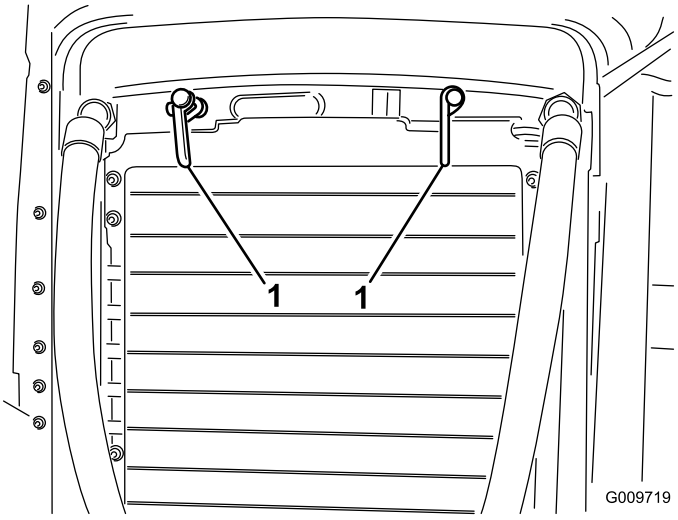

Figure 75

1. Oil cooler latches

3. Pivot the oil cooler rearward. Clean both sides of the oil cooler and radiator area (Figure 76) thoroughly with compressed air. Start from the front and blow the debris out towards the back. Then clean from the back side and blow towards the front. Repeat procedure several times until all chaff and debris is removed.

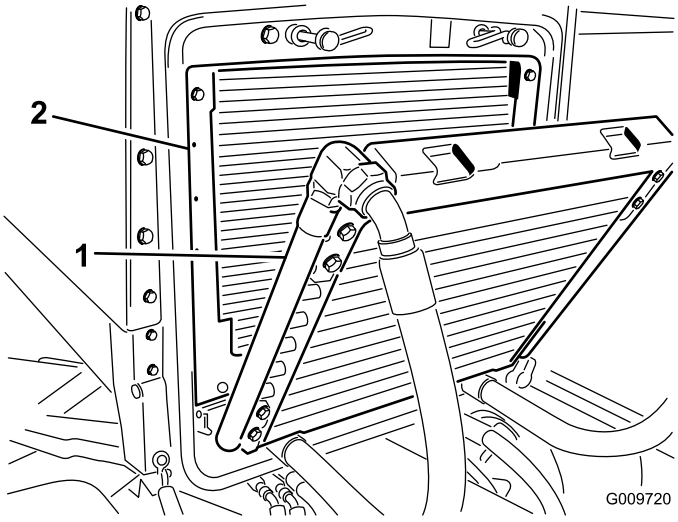

Figure 76

1. Oil cooler
2. Radiator

Important: Cleaning the radiator or oil cooler with water will promote premature corrosion damage to components and compact debris.

4. Pivot the oil cooler back into position. Secure it to the frame with the latches, close the screen.

Brake Maintenance

Adjusting the Service Brakes

Adjust the service brakes when there is more than 1 in. (25 mm) of “free travel" of the brake pedal, or when the brakes do not work effectively. Free travel is the distance the brake pedal moves before braking resistance is felt.

1. Disengage the locking latch from the brake pedals so that both pedals work independently of each other.
2. To reduce free travel of the brake pedals, tighten the brakes:
   A. Loosen the front nut on the threaded end of the brake cable (Figure 77).

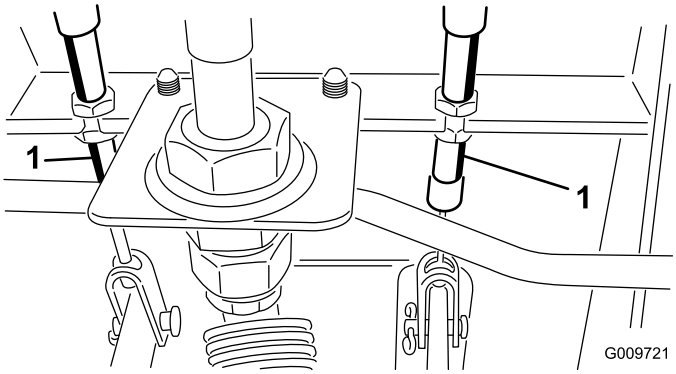

Figure 77

1. Brake cable

   B. Tighten the rear nut to move the cable backward until the brake pedals have 1/2 to 1 in. (13 to 25 mm) of free travel.
   C. Tighten the front nuts after the brakes are adjusted correctly.

Belt Maintenance

Servicing the Alternator Belt

Service Interval: Every 100 hours

Check the condition and tension of the belts (Figure 78) after every 100 operating hours.

1. Proper tension will allow 3/8 in. (10 mm) deflection when a force of 10 lb. is applied on the belt midway between the pulleys.
2. If the deflection is not 3/8 in. (10 mm), loosen the alternator mounting bolts (Figure 78). Increase or decrease the alternator belt tension and tighten the bolts. Check the deflection of the belt again to ensure that the tension is correct.

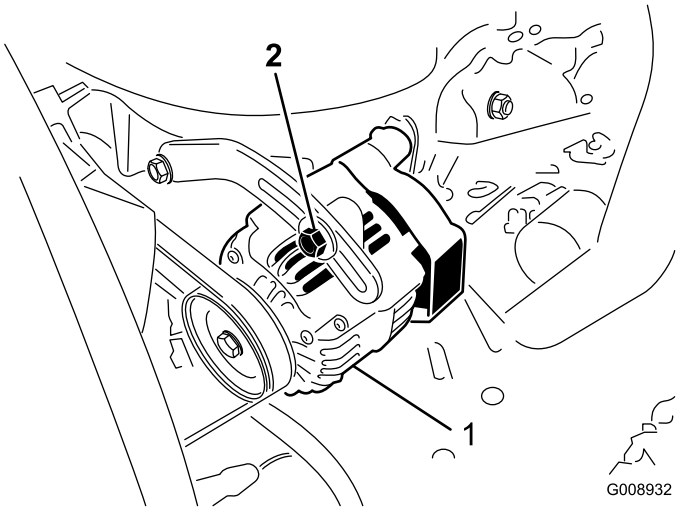

Figure 78

1. Alternator
2. Mounting bolt

Hydraulic System Maintenance

Changing the Hydraulic Fluid

Service Interval: Every 800 hours

Change the hydraulic fluid after every 800 operating hours, in normal conditions. If the fluid becomes contaminated, contact your local Toro distributor because the system must be flushed. Contaminated fluid looks milky or black when compared to clean oil.

1. Turn the engine off and raise the hood.
2. Disconnect the case return line from the bottom of the reservoir and let the hydraulic fluid flow into a large drain pan. Connect the line when the hydraulic fluid stops draining.
3. Fill the reservoir with approximately 7.5 gallons of hydraulic fluid; refer to Checking the Hydraulic Fluid.

   Important: Use only the hydraulic fluids specified. Other fluids could cause system damage.
4. Install the reservoir cap. Start the engine and use all of the hydraulic controls to distribute hydraulic fluid throughout the system. Also check for leaks; then stop the engine.
5. Check the fluid level and add enough to raise level the level to the FULL mark on the dipstick. Do not overfill.

Replacing the Hydraulic Filters

Service Interval: After the first 200 hours

Every 800 hours

Change the 2 hydraulic filters initially after the first 200 operating hours. Thereafter, change the filters after every 800 operating hours, in normal conditions.

Use Toro replacement filters Part No. 94-2621 for the rear (cutting unit) of the machine and 75-1310 for the front (charge) of the machine.

Important: Use of any other filter may void the warranty on some components.

1. Position the machine on a level surface, lower the cutting units, stop the engine, engage the parking brakes, and remove the ignition key.
2. Clean the area around the filter mounting area. Place a drain pan under the filter and remove the filter (Figure 79 and Figure 80).
3. Lubricate the new filter gasket and fill the filter with hydraulic fluid.

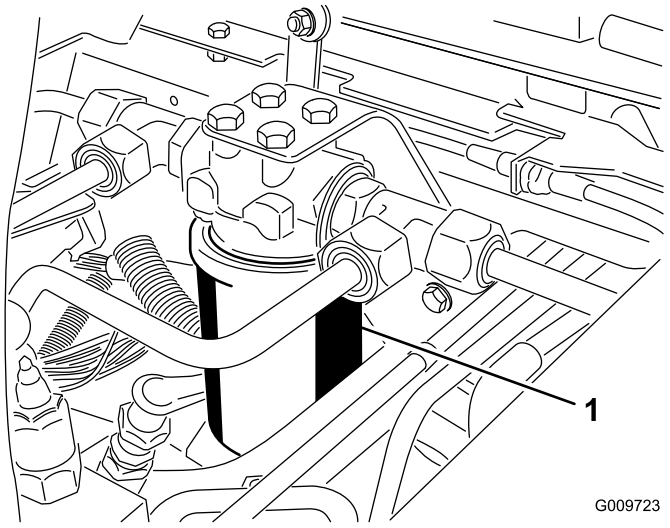

Figure 79

1. Hydraulic filter

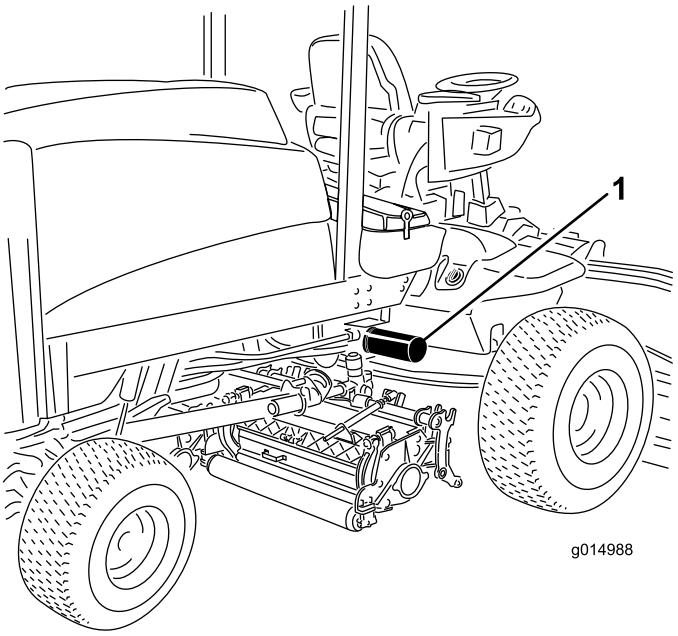

Figure 80

1. Hydraulic filter

4. Ensure that the filter mounting area is clean. Screw the filter on until the gasket contacts the mounting plate; then tighten the filter an additional 1/2 turn.
5. Start the engine and let it run for about two minutes to purge air from the system. Stop the engine and check for leaks.

Checking the Hydraulic Lines and Hoses

Service Interval: Before each use or daily

Inspect the hydraulic lines and hoses daily for leaks, kinked lines, loose mounting supports, wear, loose fittings, weather deterioration, and chemical deterioration. Make all necessary repairs before operating.

⚠ WARNING

Hydraulic fluid escaping under pressure can penetrate skin and cause injury.

- **Make sure all hydraulic fluid hoses and lines are in good condition and all hydraulic connections and fittings are tight before applying pressure to the hydraulic system.**
- **Keep your body and hands away from pin hole leaks or nozzles that eject high pressure hydraulic fluid.**
- **Use cardboard or paper to find hydraulic leaks.**
- **Safely relieve all pressure in the hydraulic system before performing any work on the hydraulic system.**
- **Seek immediate medical attention if fluid is injected into skin.**

Cutting Unit Maintenance

Backlapping the Cutting Units

⚠ WARNING

Contact with the reels or other moving parts can result in personal injury.

- **Keep fingers, hands, and clothing away from the reels or other moving parts.**
- **Never attempt to turn the reels by hand or foot while the engine is running.**

Note: When backlapping, the front units all operate together, and the rear units operate together.

1. Position the machine on a level surface, lower the cutting units, stop the engine, engage the parking brake, and move the PTO switch to OFF position.
2. Unlock and raise the hood to expose the controls.
3. Make initial reel to bedknife adjustments appropriate for backlapping on all cutting units which are to be backlapped; refer to the cutting unit *Operator's Manual*.
4. Select either front, rear or both backlap levers to determine which units to backlap (Figure 81).
5. Start the engine and run at low idle speed.

⚠ DANGER

Changing the engine speed while backlapping may cause the reels to stall.

- **Never change the engine speed while backlapping.**
- **Only backlap at low idle engine speed.**

⚠ DANGER

To avoid personal injury, be certain that you are clear of the cutting units before proceeding.

6. With the Mow Speed Limiter in the mow position, move the PTO switch to the ON position. Press the Lift Switch to start the backlapping operation on the designated reels.
7. Apply lapping compound with a long handle brush. Never use a short handled brush.

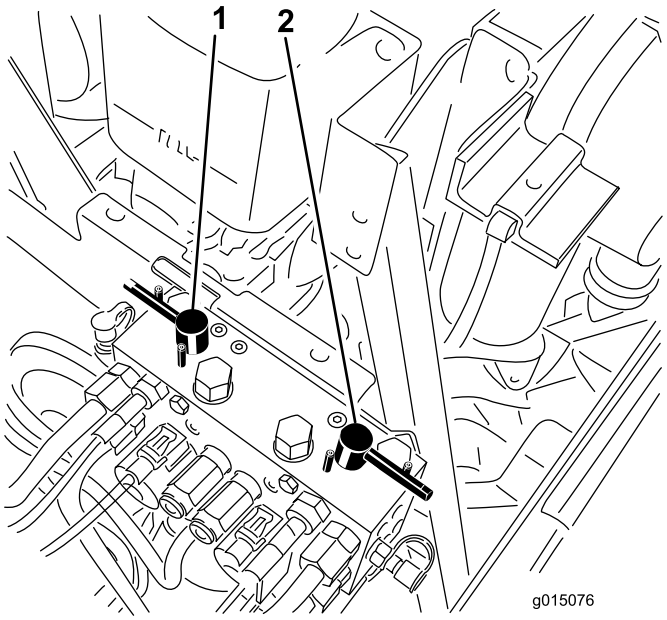

Figure 81

1. Front backlap lever
2. Rear backlap lever

8. If the reels stall or become erratic while backlapping, increase the throttle speed until the reel stabilizes.
9. To make an adjustment to the cutting units while backlapping, turn the reels off by pressing the rear of the lift switch; move the PTO switch to the OFF position, and stop the engine. After completing adjustments, repeat steps through 8.
10. Repeat the procedure for all cutting units you want to backlap.
11. When finished, return the backlap levers to the Mow position, lower the hood, and wash all lapping compound off of the cutting units. Adjust cutting unit reel to bedknife as needed. Move the cutting unit reel speed controls to the desired mowing position.

    Important: If the backlap switch is not returned to the Off position after backlapping, the cutting units will not raise or function properly.

    Note: Additional instructions and procedures on backlapping are available in the TORO Sharpening Reel & Rotary Mowers Manual Form No. 80–300SL.

    Note: For a better cutting edge, run a file across the front face of the bedknife after lapping. This will remove any burrs or rough edges that may have built up on the cutting edge.

Cleaning

Servicing the Spark Arrestor Muffler

Service Interval: Every 200 hours

Every 200 hours operation, clear the muffler of carbon buildup.

1. Remove the pipe plug from the clean-out port at the lower side of the muffler.

   ⚠ CAUTION

   The muffler may be hot and could cause injury.

   Be careful while working around the muffler.

2. Start the engine. Plug the normal muffler exit with a block of wood or metal plate so that the exhaust flow will be forced out of the clean-out port. Continue to block the exit until carbon deposits cease coming out of the port.

   ⚠ CAUTION

   Do not stand in line with the clean-out port.

   Always wear safety glasses.

3. Stop the engine and replace the pipe plug.

Storage

Engine

1. Drain the engine oil from the oil pan and install the drain plug.
2. Remove and discard the oil filter. Install a new oil filter.
3. Refill the oil pan with 10 qt. (9.5 l) of SAE 15W-40 CH-4, CI-4, higher motor oil.
4. Start the engine and run it at idle speed for approximately two minutes.
5. Stop the engine.
6. Flush the fuel tank with fresh, clean diesel fuel.
7. Secure all of the fuel system fittings.
8. Thoroughly clean and service the air cleaner assembly.
9. Seal the air cleaner inlet and the exhaust outlet with weatherproof tape.
10. Check the anti freeze protection and add a 50/50 solution of water and ethylene glycol anti-freeze as needed for the expected minimum temperature in your area.

Traction Unit

1. Thoroughly clean the traction unit, cutting units, and the engine.
2. Check the tire pressure; refer to Checking the Tire Pressure.
3. Check all fasteners for looseness; tighten as necessary.
4. Grease or oil all grease fittings and pivot points. Wipe up any excess lubricant.
5. Lightly sand and use touch-up paint on painted areas that are scratched, chipped, or rusted. Repair any dents in the metal body.
6. Service the battery and cables as follows:
   A. Remove the battery terminals from the battery posts.
   B. Clean the battery, terminals, and posts with a wire brush and baking soda solution.
   C. Coat the cable terminals and battery posts with Grafo 112X skin-over grease (Toro Part No. 505-47) or petroleum jelly to prevent corrosion.
   D. Slowly recharge the battery every 60 days for 24 hours to prevent lead sulfation of the battery.

Schematics

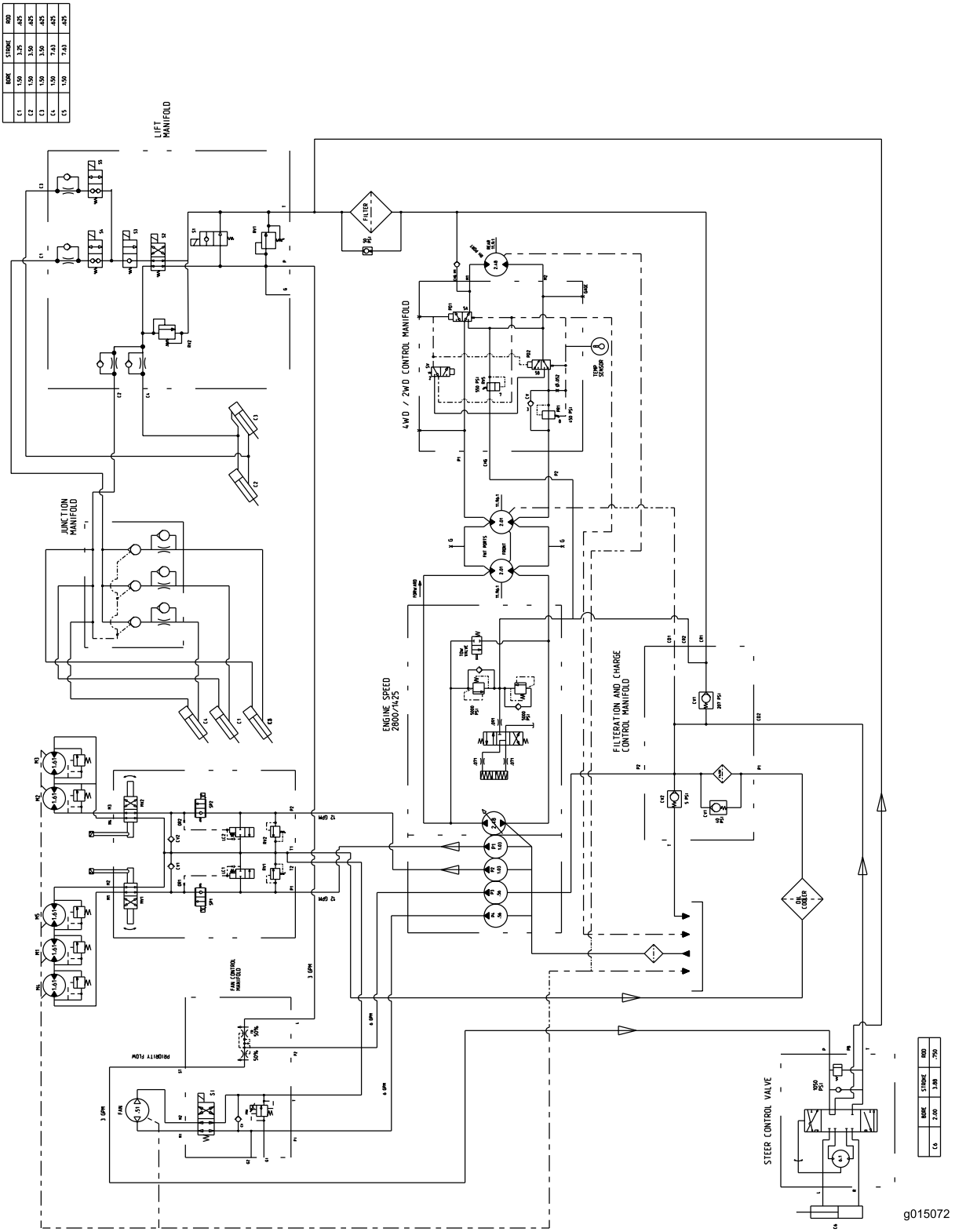

Hydraulic Schematic (Rev. A)

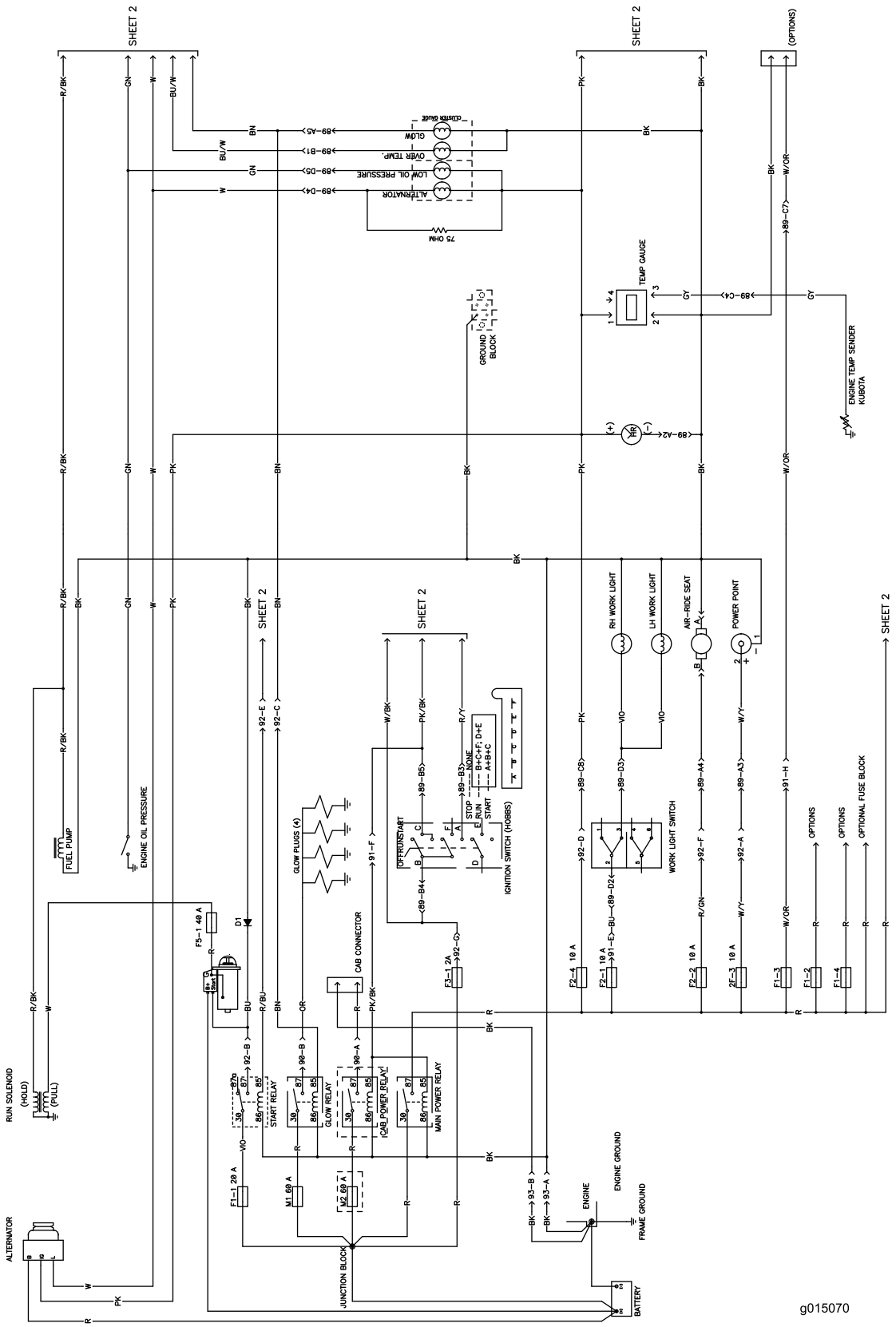

Electrical Schematic-Sheet 1 (Rev. C)

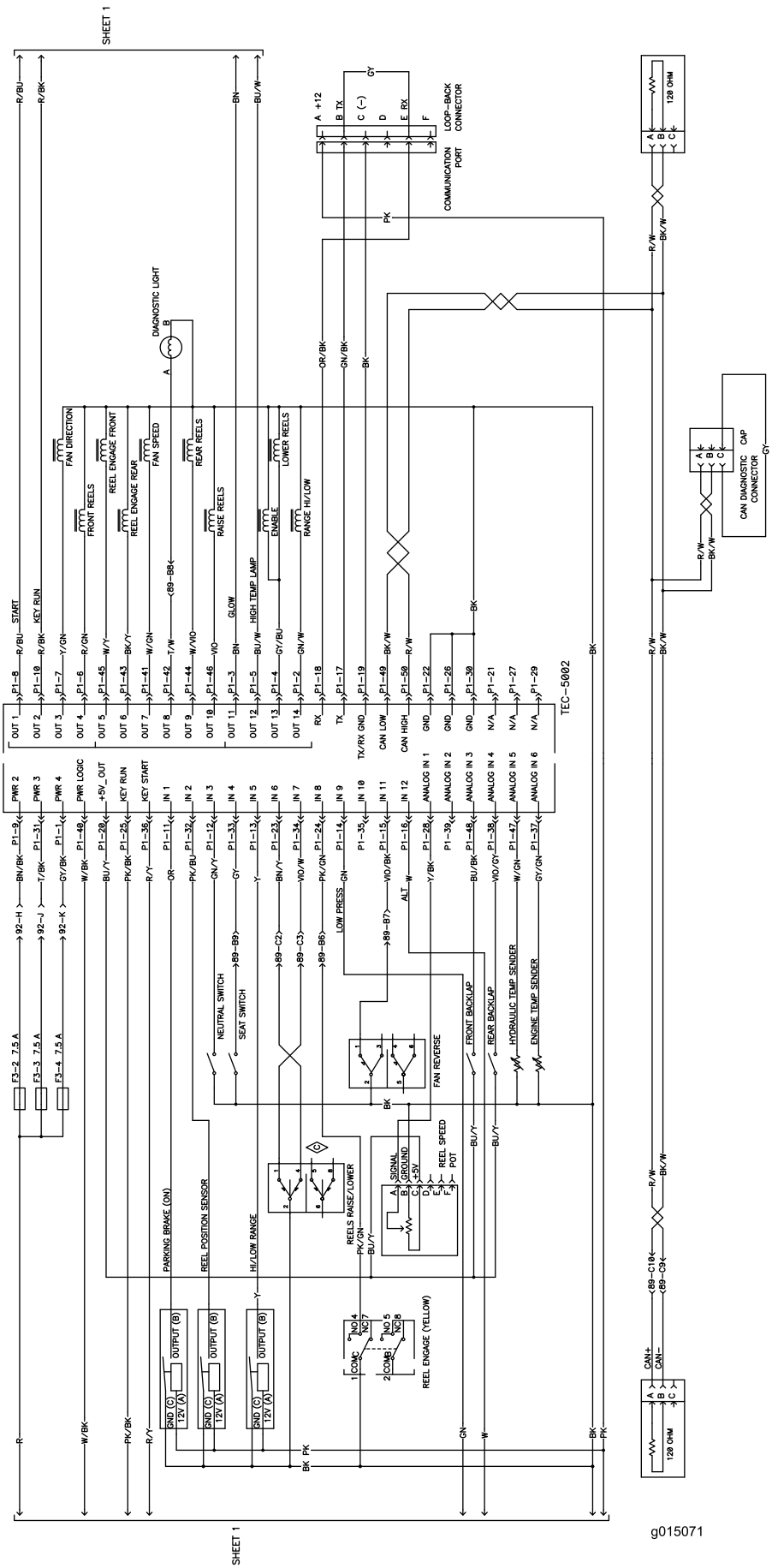

Electrical Schematic-Sheet 2 (Rev. C)

Notes:

Notes:

The Toro Total Coverage Guarantee

A Limited Warranty

Conditions and Products Covered

The Toro Company and its affiliate, Toro Warranty Company, pursuant to an agreement between them, jointly warrant your Toro Commercial product (“Product”) to be free from defects in materials or workmanship for two years or 1500 operational hours*, whichever occurs first. This warranty is applicable to all products with the exception of Aerators (refer to separate warranty statements for these products). Where a warrantable condition exists, we will repair the Product at no cost to you including diagnostics, labor, parts, and transportation. This warranty begins on the date the Product is delivered to the original retail purchaser.
* Product equipped with an hour meter.

Instructions for Obtaining Warranty Service

You are responsible for notifying the Commercial Products Distributor or Authorized Commercial Products Dealer from whom you purchased the Product as soon as you believe a warrantable condition exists. If you need help locating a Commercial Products Distributor or Authorized Dealer, or if you have questions regarding your warranty rights or responsibilities, you may contact us at:

Toro Commercial Products Service Department
Toro Warranty Company
8111 Lyndale Avenue South
Bloomington, MN 55420-1196

952–888–8801 or 800–952–2740
E-mail: commercial.warranty@toro.com

Owner Responsibilities

As the Product owner, you are responsible for required maintenance and adjustments stated in your *Operator's Manual*. Failure to perform required maintenance and adjustments can be grounds for disallowing a warranty claim.

Items and Conditions Not Covered

Not all product failures or malfunctions that occur during the warranty period are defects in materials or workmanship. This warranty does not cover the following:

- Product failures which result from the use of non-Toro replacement parts, or from installation and use of add-on, or modified non-Toro branded accessories and products. A separate warranty may be provided by the manufacturer of these items.
- Product failures which result from failure to perform recommended maintenance and/or adjustments. Failure to properly maintain your Toro product per the Recommended Maintenance listed in the *Operator’s Manual* can result in claims for warranty being denied.
- Product failures which result from operating the Product in an abusive, negligent, or reckless manner.
- Parts subject to consumption through use unless found to be defective. Examples of parts which are consumed, or used up, during normal Product operation include, but are not limited to, brake pads and linings, clutch linings, blades, reels, rollers and bearings (sealed or greasable), bed knives, spark plugs, castor wheels and bearings, tires, filters, belts, and certain sprayer components such as diaphragms, nozzles, and check valves, etc.
- Failures caused by outside influence. Conditions considered to be outside influence include, but are not limited to, weather, storage practices, contamination, use of unapproved fuels, coolants, lubricants, additives, fertilizers, water, or chemicals, etc.
- Failure or performance issues due to the use of fuels (e.g. gasoline, diesel, or biodiesel) that do not conform to their respective industry standards.
- Normal noise, vibration, wear and tear, and deterioration.
- Normal “wear and tear” includes, but is not limited to, damage to seats due to wear or abrasion, worn painted surfaces, scratched decals or windows, etc.

Parts

Parts scheduled for replacement as required maintenance are warranted for the period of time up to the scheduled replacement time for that part. Parts replaced under this warranty are covered for the duration of the original product warranty and become the property of Toro. Toro will make the final decision whether to repair any existing part or assembly or replace it. Toro may use remanufactured parts for warranty repairs.

Deep Cycle and Lithium-Ion Battery Warranty:

Deep cycle and Lithium-Ion batteries have a specified total number of kilowatt-hours they can deliver during their lifetime. Operating, recharging, and maintenance techniques can extend or reduce total battery life. As the batteries in this product are consumed, the amount of useful work between charging intervals will slowly decrease until the battery is completely worn out. Replacement of worn out batteries, due to normal consumption, is the responsibility of the product owner. Battery replacement may be required during the normal product warranty period at owner’s expense. Note: (Lithium-Ion battery only): A Lithium-Ion battery has a part only prorated warranty beginning year 3 through year 5 based on the time in service and kilowatt hours used. Refer to the *Operator's Manual* for additional information.

Maintenance is at Owner’s Expense

Engine tune-up, lubrication, cleaning and polishing, replacement of filters, coolant, and completing recommended maintenance are some of the normal services Toro products require that are at the owner’s expense.

General Conditions

Repair by an Authorized Toro Distributor or Dealer is your sole remedy under this warranty.

Neither The Toro Company nor Toro Warranty Company is liable for indirect, incidental or consequential damages in connection with the use of the Toro Products covered by this warranty, including any cost or expense of providing substitute equipment or service during reasonable periods of malfunction or non-use pending completion of repairs under this warranty. Except for the Emissions warranty referenced below, if applicable, there is no other express warranty. All implied warranties of merchantability and fitness for use are limited to the duration of this express warranty.

Some states do not allow exclusions of incidental or consequential damages, or limitations on how long an implied warranty lasts, so the above exclusions and limitations may not apply to you. This warranty gives you specific legal rights, and you may also have other rights which vary from state to state.

Note regarding engine warranty:

The Emissions Control System on your Product may be covered by a separate warranty meeting requirements established by the U.S. Environmental Protection Agency (EPA) and/or the California Air Resources Board (CARB). The hour limitations set forth above do not apply to the Emissions Control System Warranty. Refer to the Engine Emission Control Warranty Statement supplied with your product or contained in the engine manufacturer’s documentation for details

Countries Other than the United States or Canada

Customers who have purchased Toro products exported from the United States or Canada should contact their Toro Distributor (Dealer) to obtain guarantee policies for your country, province, or state. If for any reason you are dissatisfied with your Distributor's service or have difficulty obtaining guarantee information, contact the Toro importer.