Form No. 3369-270 Rev B

Wheel Motor Kit

Reelmaster 5210/5410/5510/5610 Traction Unit

Model No. 120–6275

Model No. 120–6280

Installation Instructions

Important: The Wheel Motor Kit Installation Instructions cover the removal and installation of new wheel motors, wheel motor components and hydraulic filters. If the original traction circuit components have been damaged, additional repairs and high pressure hydraulic system flushing must be performed prior to installing new wheel motors. Contact your local distributor for additional information

Removing the Old Components (Fig. 1)

1. Park the machine on a level surface, engage the parking brake, lower the cutting units and stop the engine. Remove the key from the ignition switch.

⚠ WARNING

Before disconnecting or performing any work on hydraulic system, relieve all pressure in system. Stop engine; lower or support all cutting units.

Keep body and hands away from pin hole leaks or nozzles that eject hydraulic fluid under high pressure. Use paper or cardboard, not hands, to search for leaks. Hydraulic fluid escaping under pressure can have sufficient force to penetrate the skin and cause serious injury. If fluid is injected into the skin, it must be surgically removed within a few hours by a doctor familiar with this type of injury. Gangrene may result from such an injury.

⚠ CAUTION

When changing attachments, tires or performing other service, use correct blocks, hoists and jacks. Make sure the machine is parked on a solid, level surface such as a concrete floor. Prior to raising the machine, remove any attachments that may interfere with the safe and proper raising of the machine. Always chock or block the wheels. Use jack stands or other appropriate load holding devices to support the raised machine. If the machine is not properly supported, the machine may move or fall, which may result in personal injury.

2. Remove the front wheels from the machine as follows:
   - Chock the rear wheels to prevent the machine from shifting.
   - Loosen the lug nuts on the front wheels.
   - Using a jack, raise the machine so the wheel is off the ground. Support the machine with jack stands. Refer to your Operators Manual for the proper jacking instructions.
   - Release the parking brake.
   - Remove the lug nuts and then remove the wheel and brake drum from the machine.
3. Remove the cotter pin and clevis pin that secure the brake cable clevis to the brake actuator lever. Position the brake cable clevis away from the actuator lever.

   Note: Machines with serial numbers 310000001 or higher, also have brake spring/bracket assemblies. Care should be taken to remove the springs so that they are not lost or discarded.
4. Loosen, but do not fully remove, the lock nut that secures the wheel hub to the wheel motor. Loosen the lock nut at least two turns. This will prevent the hub from flying off as the taper releases.

   Important: DO NOT hit the wheel hub, puller or wheel motor with a hammer during the wheel hub removal or installation. Hammering may cause damage to the wheel motor.

© 2012—The Toro® Company
8111 Lyndale Avenue South
Bloomington, MN 55420

Register at www.Toro.com.

Original Instructions (EN)
Printed in the USA.
All Rights Reserved

5. Use a appropriate puller (TOR6004) to loosen the wheel hub from the wheel motor.
6. Remove the lock nut and wheel hub from the motor shaft.
7. Remove the (4) screws securing the brake assembly to the brake adapter. Remove the brake assembly. Discard the screws.
8. Thoroughly clean the hydraulic line ends and fittings on the wheel motor to prevent contaminating the to hydraulic system.
9. Label the hydraulic connections at the wheel motor for assembly purposes.
10. Disconnect the hydraulic lines from the fittings on the wheel motors. Allow the lines to drain into a suitable container.
11. Put caps or plugs on the disconnected lines and fittings to prevent contamination.
12. Support each wheel motor to prevent them from falling.
13. Remove the (4) locknuts securing the brake adapter, wheel motor and spring clip to the frame.
14. Remove the brake adapter, wheel motor and brake spring bracket from the machine.
15. Note the orientation of the fittings to simplify the installation on the new motor assemblies. Remove the fittings from the motor and discard the O-rings.

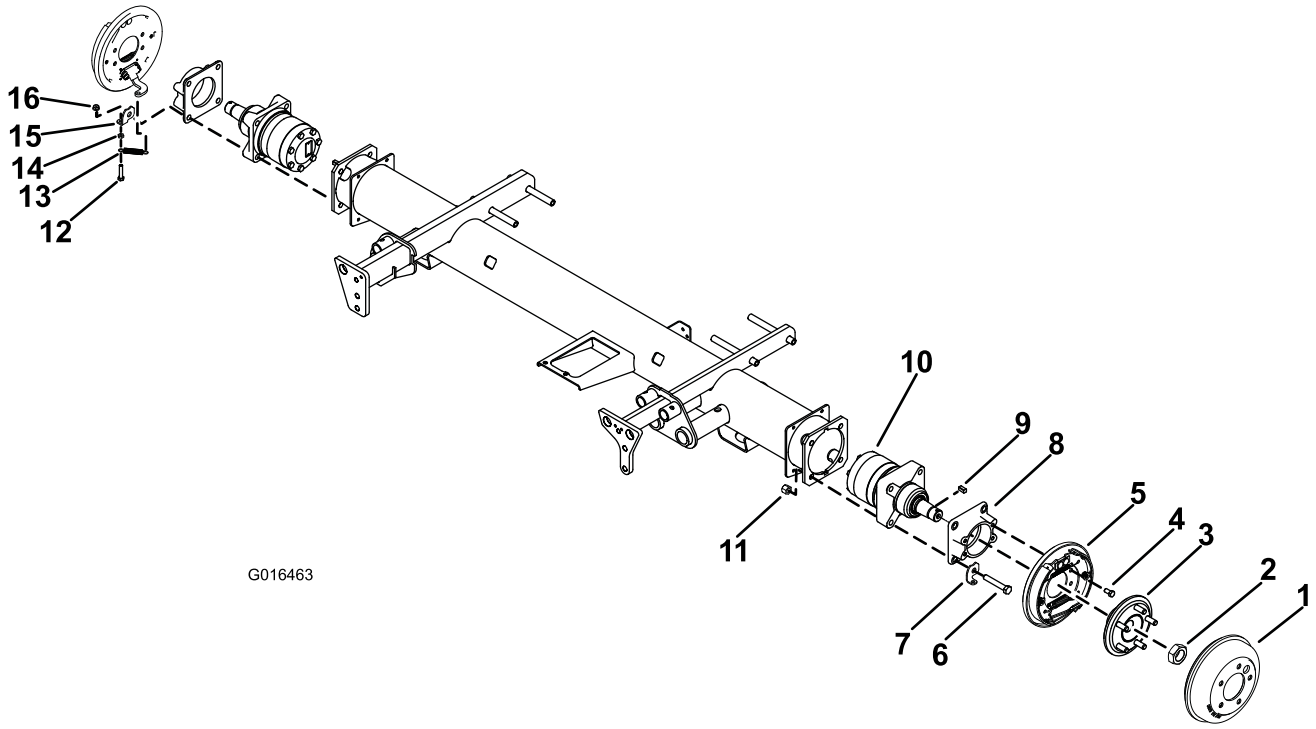

Figure 1

1. Brake drum
2. Hex nut
3. Hub assembly
4. Screw, 3/8 x 3/4 inch
5. Brake assembly, L.H.
6. Screw, 1/2 x 3 inch
7. Brake spring bracket or Spring clip, L.H.
8. Brake adapter
9. Square key
10. Wheel motor, L.H.
11. Lock nut, 1/2 inch
12. Screw, 5/16 x 1–1/2 inch
13. Extension spring
14. Jam nut, 5/16 inch
15. Brake spring bracket or Spring clip, R.H.
16. Flange nut, 5/16 inch

Installing the New Components (Fig. 1)

1. Lubricate and install the new O-rings onto the fittings previously removed from the wheel motors.
2. Install the fittings into the wheel motor ports, orientating them as noted in the removal process.

   Note: The left wheel motor is identified with either a yellow dot or with a ring machined into the shaft of the motor, shown in Figure 2.

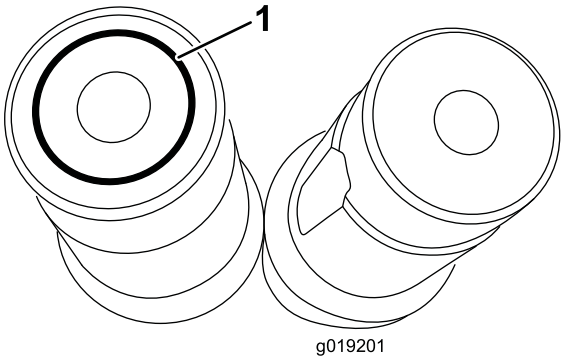

Figure 2

1. Machined ring in shaft

3. Position the wheel motor to frame. Mount the spring clip, brake adapter and the wheel motor to the frame with (4) 1/2 x 3 inch capscrews.
4. Install and tighten the (4) 1/2 inch lock nuts onto the capscrews to secure the motor, brake adapter and spring clip to the frame. Torque the screws to 67 to 83 ft-lb (91 to 113 N-m). Make sure spring clip is positioned as shown in figure Figure 1.
5. Mount the brake assembly to the brake adapter with (4) 3/8 x 3/4 inch capscrews. Torque the capcrews to 27 to 33 ft-lb (27 to 45 N-m).
6. Thoroughly clean the wheel motor shaft and wheel hub taper. **Do not apply anti-seize or grease to the hub or wheel motor shaft.**
7. Install the new square key into the wheel motor shaft key slot. Align the wheel hub with the square key and slide the wheel hub onto the motor shaft. Secure the hub with the locknut. Torque the locknut to 405 to 495 ft-lb (549 to 671 N-m).

   Important: Use of a torque multiplier with a standard torque wrench is not recommended, but is a possible alternative to having a torque wrench capable of 500 ft-lbs (678 N-m).
8. If there are signs of internal wheel motor or hydrostat damage (i.e. metal or debris in the hydraulic fluid, loss of traction or traction performance problems, etc.), specific testing and flushing procedures must be performed. Contact your local distributor for additional information.
9. Remove the caps or plugs from the disconnected hydraulic lines and fittings
10. Lubricate and position the new O-rings onto the wheel motor hydraulic fittings. Install the hydraulic lines to wheel motor fittings positioning them as noted in the removal process.
11. Secure the brake cable clevis to the brake actuator lever with a clevis pin and cotter pin.
12. Install the brake drum, front wheel and extension spring to the machine. Torque the lug nuts to 70 to 90 ft-lb (95 to 122 N-m).

    Note: On models 03670, 03680 and 03690 with serial numbers prior to 270001500, and model 03660 with serial numbers prior to 280000000, the brake drum, part no. 108-6980, must be replaced with brake drum, part no. 114-8864.
13. Repeat the procedure on the opposite wheel motor.
14. Install the new hydraulic filters as follows:
    - Clean the area around the charge circuit/steering filter (86–3010) mounting area and place a drain pan under filter.
    - Remove the filter.
    - Lubricate the gasket on the new filter with hydraulic oil.
    - Ensure that the filter mounting area is clean.
    - Install the filter by hand until the gasket contacts the mounting surface, then rotate it an additional 1/2 turn.
    - Repeat the procedure on the reservoir filter (94–2621).
    - Start the engine and let it run for about two minutes to purge air from the system.
    - Stop the engine and check for leaks
15. Check the hydraulic system oil level and replenish as needed.
16. Test run the machine for a short period to check all connections for leaks prior to installing the wheels.
17. Recheck the hydraulic system oil level and replenish as needed.
18. Remove the jack stands and test drive the machine to check performance.



Count on it.