FORM NO. 3315–966 REV. A

TORO®

PART NO. 87–5410
PART NO. 87–8310

INSTALLATION INSTRUCTIONS

TACHOMETER KIT
For Workman 3300–D

1. Make sure lights are OFF and key is removed from ignition switch.

2. Remove plug from hole in dash panel.

3. Locate wire harness under dash and cut wire tie securing tachometer wires to frame.

4. Pull wires through hole in dash and carefully cut off plastic shielding around wire terminals.

5. Remove (2) hex nuts securing tachometer clamp to tachometer.

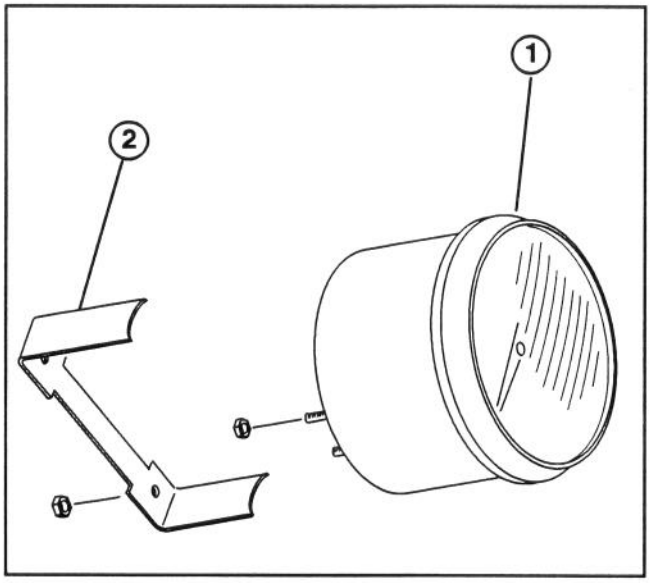

Figure 1
1. Tachometer
2. Tachometer clamp

6. Remove (4) hex nuts from tachometer terminal posts.

7. Using diagram below, connect appropriate colored wires from harness to appropriate terminals on back of tachometer with hex nuts.

Note: Cylinder selector switch, on back of tachometer, should be on position "4".

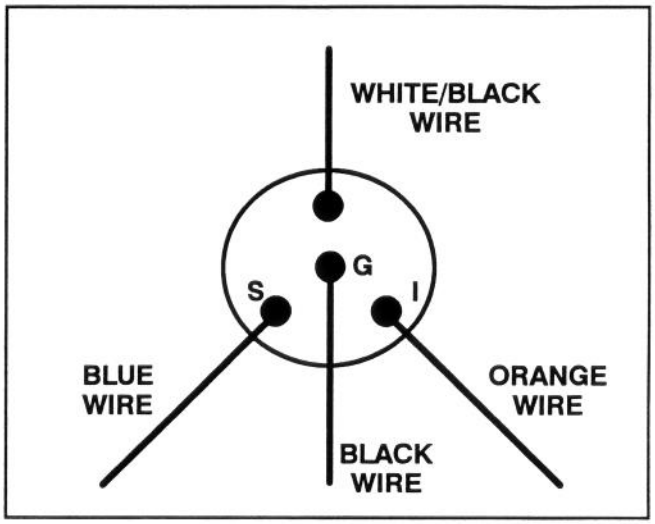

Figure 2

8. Before installing tachometer in vehicle dash, verify calibration as follows:

A. Make sure tachometer contacts are not touching vehicle.

B. Set parking brake, move shift lever to neutral and start engine.

C. With engine running at high idle, verify reading on new tachometer with another tachometer.

D. Adjust calibration, as required, by rotating screw in "CAL" hole in back of tachometer.

E. Stop engine upon completion.

9. Insert tachometer into hole in dash. Secure tachometer to under side of dash with tachometer clamp and (2) hex nuts.

©The Toro Company-1993