Form No. 3374-856 Rev A

55cm Recycler® Lawn Mower

Model No. 20955—Serial No. 310000001 and Up

Model No. 20956—Serial No. 310000001 and Up

Operator's Manual

Replacement parts are available from an Authorized Service Dealer or at www.shoptoro.com.

Introduction

This rotary-blade, walk-behind lawn mower is intended to be used by residential homeowners. It is designed primarily for cutting grass on well-maintained lawns on residential properties. It is not designed for cutting brush or for agricultural uses.

Read this information carefully to learn how to operate and maintain your product properly and to avoid injury and product damage. You are responsible for operating the product properly and safely.

You may contact Toro directly at www.Toro.com for product and accessory information, help finding a dealer, or to register your product.

Whenever you need service, genuine Toro parts, or additional information, contact an Authorized Service Dealer or Toro Customer Service and have the model and serial numbers of your product ready. Figure 1 identifies the location of the model and serial numbers on the product.

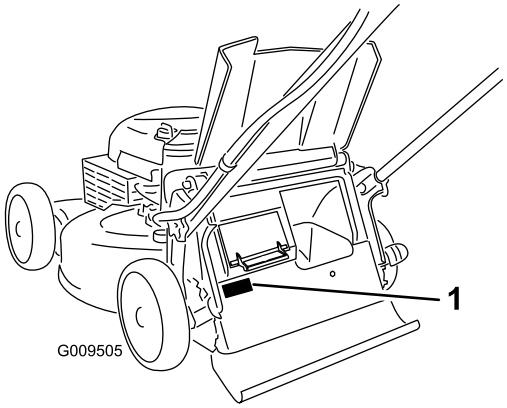

Figure 1

1. Model and serial number plate

Write the product model and serial numbers in the space below:

Model No. _____

Serial No. _____

This manual identifies potential hazards and has safety messages identified by the safety alert symbol (Figure 2), which signals a hazard that may cause serious injury or death if you do not follow the recommended precautions.



Figure 2

1. Safety alert symbol

This manual uses 2 words to highlight information. **Important** calls attention to special mechanical information and **Note** emphasizes general information worthy of special attention.

This product complies with all relevant European directives. For details, see the separate product-specific Declaration of Conformity (DOC) sheet.

For models with stated engine horsepower, the gross horsepower of the engine was laboratory rated by the engine manufacturer in accordance with SAE J1940. As configured to meet safety, emission, and operating requirements, the actual engine horsepower on this class of lawn mower will be significantly lower.

Do not tamper with the engine controls or alter the governor speed; doing so may create an unsafe condition resulting in personal injury.

Contents

Introduction 1
Safety 2
- General Lawn Mower Safety 2
- Sound Pressure 3
- Sound Power 3
- Hand/Arm Vibration 3
- Safety and Instructional Decals 4

Setup 5
- 1 Installing the Handle 5
- 2 Filling the Engine with Oil 6
- 3 Charging the Battery 6

Product Overview 7

© 2012—The Toro® Company
8111 Lyndale Avenue South
Bloomington, MN 55420

Register at www.Toro.com.

CE

Original Instructions (EN)
Printed in the USA
All Rights Reserved

3374-856 A

Specifications 7
Operation 7
Filling the Fuel Tank 7
Checking the Engine Oil Level 8
Adjusting the Cutting Height 8
Starting the Engine 9
Using the Self-propel Drive 9
Stopping the Engine 9
Recycling the Clippings 9
Bagging the Clippings 10
Side-discharging the Clippings 11
Operating Tips 12
Maintenance 13
Recommended Maintenance Schedule(s) 13
Preparing for Maintenance 13
Replacing the Air Filter 14
Changing the Engine Oil 14
Charging the Battery 15
Replacing the Fuse 15
Replacing the Blade 16
Adjusting the Self-propel Drive Cable 16
Cleaning under the Machine Housing 17
Storage 18
Preparing the Machine for Storage 18
Folding the Handle 18
Removing the Machine from Storage 18

Safety

Improperly using or maintaining this mower can result in injury. To reduce the potential for injury, comply with these safety instructions.

Toro designed and tested this machine for reasonably safe service; however, failure to comply with the following instructions may result in personal injury.

To ensure maximum safety, best performance, and to gain knowledge of the product, it is essential that you and any other operator of the mower read and understand the contents of this manual before the engine is ever started. Pay particular attention to the safety alert symbol (Figure 2), which means Caution, Warning, or Danger—"personal safety instruction." Read and understand the instruction because it has to do with safety. Failure to comply with the instruction may result in personal injury.

General Lawn Mower Safety

The following instructions have been adapted from EN 836.

This cutting machine is capable of amputating hands and feet and of throwing objects. Failure to observe the following safety instructions could result in serious injury or death.

Training

- Read the instructions carefully. Be familiar with the controls and the proper use of the equipment.
- Never allow children or people unfamiliar with these instructions to use the mower. Local regulations can restrict the age of the operator.
- Keep in mind that the operator or user is responsible for accidents or hazards occurring to other people or their property.
- Understand explanations for all pictograms used on the mower or in the instructions.

Gasoline

WARNING-Gasoline is highly flammable. Take the following precautions.

- Store fuel in containers specifically designed for this purpose.
- Refuel outdoors only and do not smoke while refueling.
- Add fuel before starting the engine. Never remove the cap of the fuel tank or add gasoline while the engine is running or when the engine is hot.
- If gasoline is spilled, do not attempt to start the engine but move the mower away from the area of spillage and avoid creating any source of ignition until gasoline vapors have dissipated.
- Replace all fuel tank and container caps securely.

Preparation

- While mowing, always wear substantial footwear and long trousers. Do not operate the equipment when barefoot or wearing open sandals.
- Thoroughly inspect the area where the equipment is to be used and remove all stones, sticks, wires, bones and other foreign objects.
- Before using, always visually inspect to see that guards, and safety devices, such as deflectors and/or grass catchers, are in place and working correctly.
- Before using, always visually inspect to see that the blades, blade bolts and cutter assembly are not worn or damaged. Replace worn or damaged blades and bolts in sets to preserve balance.

Starting

- Do not tilt the mower when starting the engine unless the mower has to be tilted for starting. In this case, do not tilt it more than absolutely necessary and lift only the part which is away from the operator.
- Start the engine carefully according to instructions and with feet well away from the blade(s) and not in front of the discharge chute.

Operation

- Never mow while people, especially children, or pets are nearby.
- Mow only in daylight or in good artificial light.
- Stay alert for holes in the terrain and other hidden hazards.
- Do not put hands or feet near or under rotating parts. Keep clear of the discharge opening at all times.
- Never pick up or carry a lawn mower while the engine is running.
- Use extreme caution when reversing or pulling a pedestrian controlled lawn mower towards you.
- Walk, never run.
- Slopes:
  - Do not mow excessively steep slopes.
  - Exercise extreme caution when on slopes.
  - Mow across the face of slopes, never up and down, and exercise extreme caution when changing direction on slopes.
  - Always be sure of your footing on slopes.
- Reduce speed on slopes and in sharp turns to prevent overturning or loss of control.
- Stop the blade if the lawn mower has to be tilted for transportation when crossing surfaces other than grass and when transporting the lawn mower to and from the area to be mowed.
- Do not operate the engine in a confined space where dangerous carbon monoxide fumes can collect.
- Stop the engine
  - whenever you leave the lawn mower.
  - before refueling.
  - before removing the grass catcher.
  - before making height adjustment unless adjustment can be made from the operator's position.
- Stop the engine and disconnect the spark-plug wire.
  - before clearing blockages or unclogging chute.
  - before checking, cleaning or working on the lawn mower.
  - after striking a foreign object, inspect the lawn mower for damage and make repairs before restarting and operating the lawn mower.
  - if lawn mower starts to vibrate abnormally (check immediately).
- Lightning can cause severe injury or death. If you see lightning or hear thunder in the area, do not operate the machine; seek shelter.
- Watch out for traffic when crossing or near roadways.

Maintenance and Storage

- Keep all nuts, bolts, and screws tight to be sure the equipment is in safe working condition.
- Do not use pressure-cleaning equipment on machine.
- Never store the equipment with gasoline in the tank and inside a building where fumes can reach an open flame or spark.
- Allow the engine to cool before storing in any enclosure.
- To reduce the fire hazard, keep the engine, silencer, battery compartment and gasoline storage area free of grass, leaves, or excessive grease.
- Check grass catcher components and the discharge guard frequently and replace with manufacturer's recommended parts, when necessary.
- Replace worn or damaged parts for safety.
- Replace faulty silencers.
- If the fuel tank has to be drained, do this outdoors.
- Do not change the engine governor settings or overspeed the engine. Operating an engine at excessive speed can increase the hazard of personal injury.
- Be careful during adjustment of the lawn mower to prevent entrapment of the fingers between moving blades and fixed parts of the lawn mower.
- **To ensure the best performance and safety, purchase only genuine Toro replacement parts and accessories. Do not use *will fit* parts and accessories; they may cause a safety hazard.**

Sound Pressure

This unit has a sound pressure level at the operator's ear of 89 dBA, which includes an Uncertainty Value (K) of 1 dBA.

The sound pressure level was determined according to the procedures outlined in EN 836.

Sound Power

This unit has a guaranteed sound power level of 98 dBA, which includes an Uncertainty Value (K) of 1 dBA.

The sound power level was determined according to the procedures outlined in ISO 11094.

Hand/Arm Vibration

Measured vibration level for right hand = 3.0 m/s

Measured vibration level for left hand = 5.7 m/s

Uncertainty Value (K) = 2.3 m/s2

Measured values were determined according to the procedures outlined in EN 836.

Safety and Instructional Decals

Important: **Safety and instruction decals are located near areas of potential danger. Replace damaged decals.**

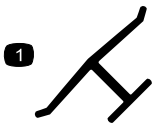

Manufacturer's Mark

1. Indicates the blade is identified as a part from the original machine manufacturer.

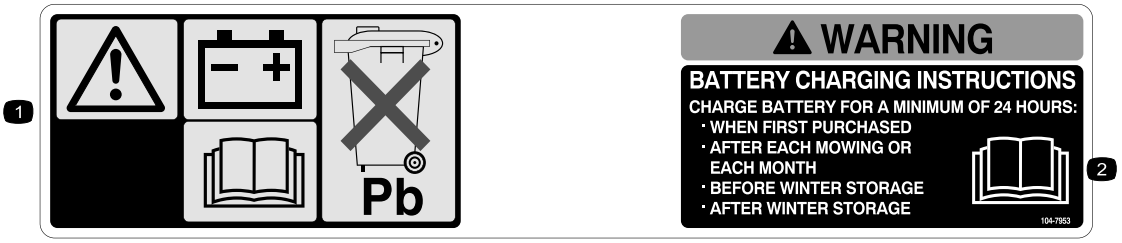

104-7953

1. Warning—read the *Operator's Manual* for information on charging the battery; contains lead; do not discard.
2. Read the *Operator's Manual.*

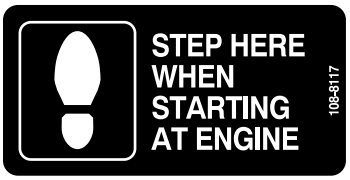

108-8117

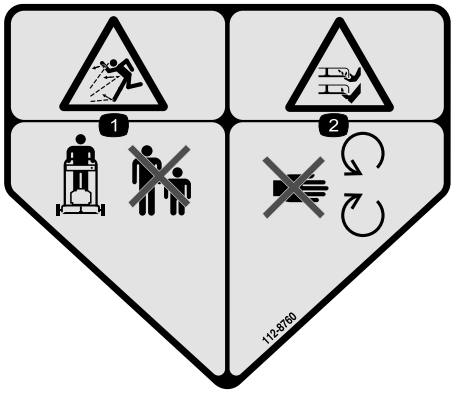

112-8760

1. Thrown object hazard—keep bystanders a safe distance from the machine.
2. Cutting/dismemberment of hand or foot—stay away from moving parts.



112-8867

1. Lock
2. Unlock

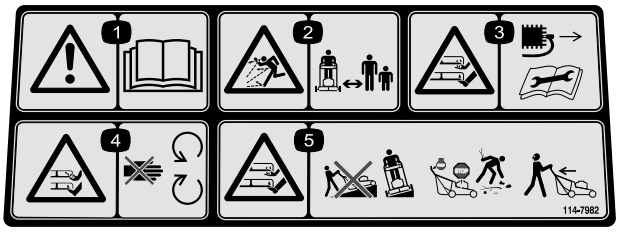

114-7982

1. Warning—read the *Operator's Manual*.
2. Thrown object hazard—keep bystanders a safe distance from the machine.
3. Cutting/dismemberment hazard of hand or foot, mower blade—disconnect the spark plug wire and read the instructions before servicing or performing maintenance.
4. Cutting/dismemberment hazard of hand or foot, mower blade—stay away from moving parts.
5. Cutting/dismemberment hazard of hand or foot, mower blade—do not operate up and down slopes; operate side to side on slopes; stop the engine before leaving the operating position; and look behind you when backing up.

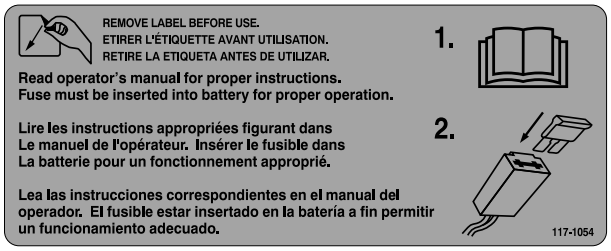

117-1054

Electric-start model only

Setup

Important: **Remove and discard the protective plastic sheet that covers the engine.**

1

Installing the Handle

No Parts Required

Procedure

⚠ WARNING

Folding or unfolding the handle improperly can damage the cables, causing an unsafe operating condition.

- **Do not damage the cables when folding or unfolding the handle.**
- **If a cable is damaged, contact an Authorized Service Dealer.**

1. Remove the handle knobs from the machine housing (Figure 3).

   Important: **Route the cables to the outside of the handle knobs as you install the handle.**

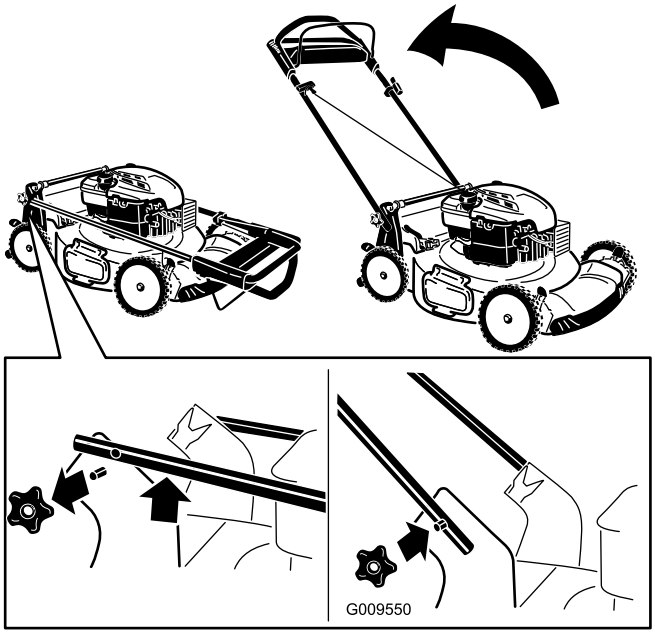

Figure 3

2. Move the handle to the operating position.
3. Install and tighten the handle knobs that you removed in step 1.

2

Filling the Engine with Oil

No Parts Required

Procedure

Important: Your machine does not come with oil in the engine. Before starting the engine, fill the engine crankcase with oil.

1. Move the machine to a level surface.
2. Remove the dipstick (Figure 4) and pour about 3/4 of the crankcase capacity of oil into the oil-fill tube.

   Note: Max. fill: 0.59 l (20 fl. oz.), type: SAE 30 detergent oil with an API service classification of SF, SG, SH, SJ, SL, or higher.

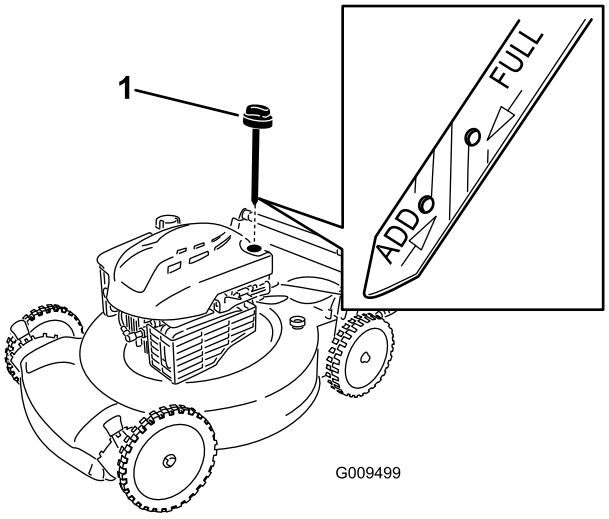

Figure 4

1. Dipstick

3. Wipe the dipstick clean with a clean cloth.
4. Insert the dipstick fully into the oil-fill tube.
5. Remove the dipstick and read the oil level on the dipstick; refer to Figure 4.
   - If the oil is below the **Add** mark on the dipstick, slowly pour a small amount of oil into the oil-fill tube, wait 3 minutes, and then repeat steps 3 through 5 until the oil level is at the **Full** mark on the dipstick.
   - If the oil is above the **Full** mark on the dipstick, drain the excess oil until the oil level is at the **Full** mark on the dipstick. To drain the excess oil, refer to Changing the Engine Oil (page 14).

   Important: If the oil level in the crankcase is too low or too high and you run the engine, you may damage the engine.
6. Install the dipstick into the oil-fill tube securely.

   Important: *Change the engine oil after the first 5 operating hours*; change it yearly thereafter. Refer to Changing the Engine Oil (page 14).

3

Charging the Battery

No Parts Required

Procedure

Electric-start model only

Refer to Charging the Battery (page 15).

Product Overview

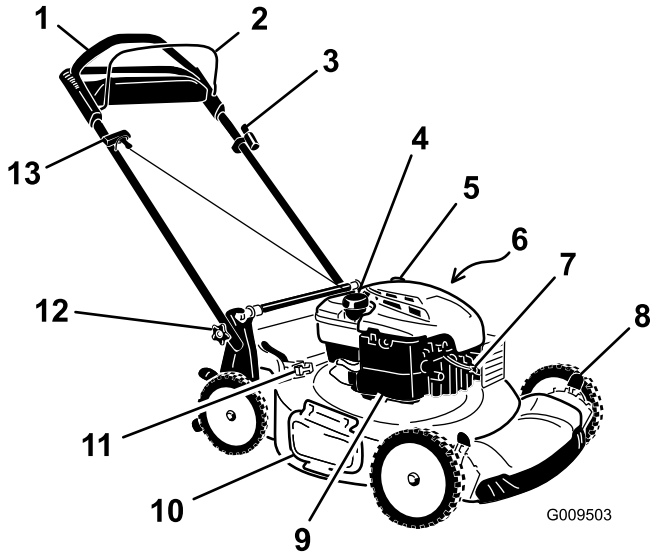

Figure 5

1. Handle
2. Blade-control bar
3. Ignition key (electric-start models only)
4. Fuel-tank cap
5. Oil fill/dipstick
6. Washout port (not shown)
7. Spark plug
8. Cutting-height lever (4)
9. Air filter
10. Side-discharge deflector
11. Bag-on-demand lever
12. Handle knob (2)
13. Recoil-start handle

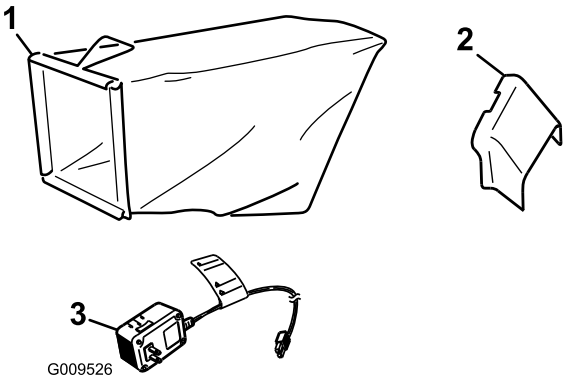

Figure 6

1. Grass bag
2. Side-discharge chute
3. Battery charger (electric-start models only)

Specifications

Model	Weight	Length	Width	Height
20955	37 kg (81 lb)	150 cm (59 in)	58 cm (23 in)	107 cm (42 in)
20956	40 kg (88 lb)	150 cm (59 in)	58 cm (23 in)	107 cm (42 in)

Operation

Filling the Fuel Tank

⚠ DANGER

Gasoline is extremely flammable and explosive. A fire or explosion from gasoline can burn you and others.

- **To prevent a static charge from igniting the gasoline, place the container and/or machine directly on the ground before filling, not in a vehicle or on an object.**
- **Fill the tank outdoors when the engine is cold. Wipe up spills.**
- **Do not handle gasoline when smoking or around an open flame or sparks.**
- **Store gasoline in an approved fuel container, out of the reach of children.**

Fill the fuel tank with fresh unleaded regular gasoline from a major name-brand service station (Figure 7).

Note: Never use methanol, gasoline containing methanol, or gasoline containing more than 10% ethanol because the fuel system could be damaged. Do not mix oil with gasoline.

Important: To reduce starting problems, add fuel stabilizer to the fuel all season, mixing it with gasoline less than 30 days old.

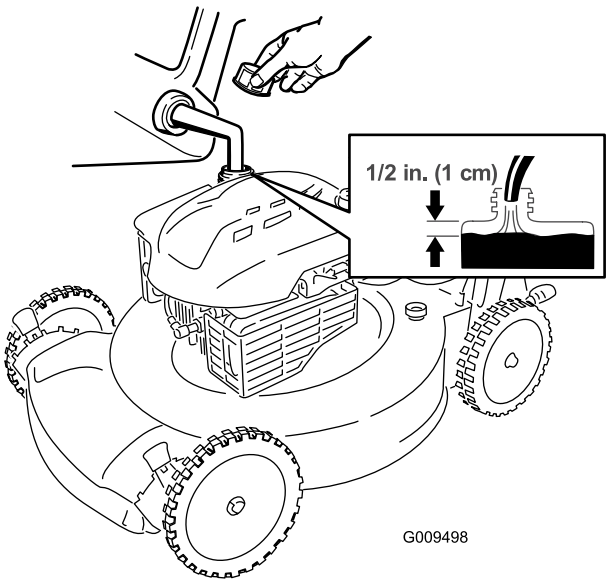

Figure 7

Checking the Engine Oil Level

Service Interval: Before each use or daily

Note: Max. fill: 0.59 l (20 fl. oz.), type: SAE 30 detergent oil with an API service classification of SF, SG, SH, SJ, SL, or higher.

1. Move the machine to a level surface.
2. Remove the dipstick (Figure 8).

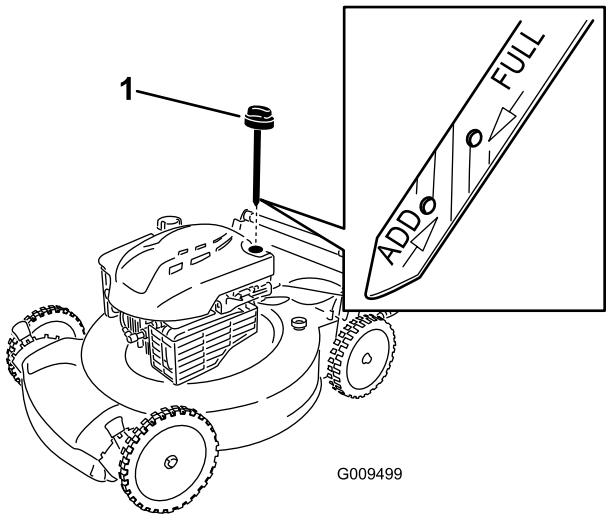

Figure 8

1. Dipstick

3. Wipe the dipstick clean with a clean cloth.
4. Insert the dipstick fully into the oil-fill tube.
5. Remove the dipstick and read the oil level on the dipstick; refer to Figure 8.
   - If the oil is below the **Add** mark on the dipstick, slowly pour a small amount of oil into the oil-fill tube, wait 3 minutes, and then repeat steps 3 through 5 until the oil level is at the **Full** mark on the dipstick.
   - If the oil is above the **Full** mark on the dipstick, drain the excess oil until the oil level is at the **Full** mark on the dipstick. To drain the excess oil, refer to Changing the Engine Oil (page 14).

   Important: If the oil level in the crankcase is too low or too high and you run the engine, you may damage the engine.
6. Install the dipstick into the oil-fill tube securely.

Adjusting the Cutting Height

⚠ WARNING

Adjusting the cutting height may bring you into contact with the moving blade, causing serious injury.

- **Stop the engine and wait for all moving parts to stop.**
- **Do not put your fingers under the housing when adjusting the cutting height.**

⚠ CAUTION

If the engine has been running, the muffler will be hot and can severely burn you. Keep away from the hot muffler.

Adjust the cutting height as desired. Set the front wheels to the same height as the rear wheels (Figure 9).

Note: To raise the machine, move the front cutting-height levers rearward and the rear cutting-height levers forward. To lower the machine, move the front cutting-height levers forward and the rear cutting-height levers rearward.

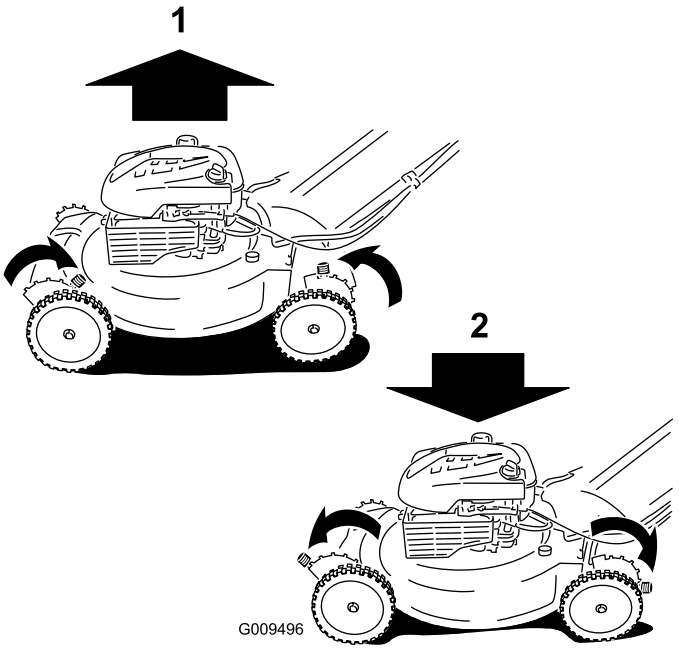

Figure 9

1. Raise the machine
2. Lower the machine

Note: The cutting height settings are 25 mm (1 in); 35 mm (1-3/8 in); 44 mm (1-3/4 in); 54 mm (2-1/8 in); 64 mm (2-1/2 in); 73 mm (2-7/8 in); 83 mm (3-1/4 in); 92 mm (3-5/8 in); and 102 mm (4 in).

Starting the Engine

1. Hold the blade-control bar against the handle (Figure 10).

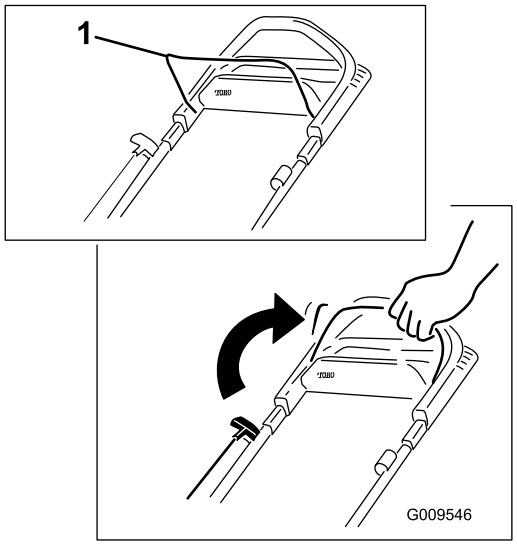

Figure 10

1. Blade-control bar

2. Turn the ignition key (Figure 11) (electric-start models only) or pull the recoil-start handle (Figure 12).

   Note: When you pull the recoil-start handle, pull it lightly until you feel resistance, then pull it sharply (Figure 12). Allow the rope to return to the handle slowly.

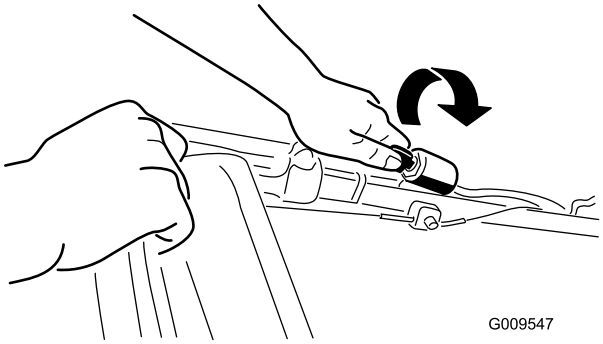

Figure 11

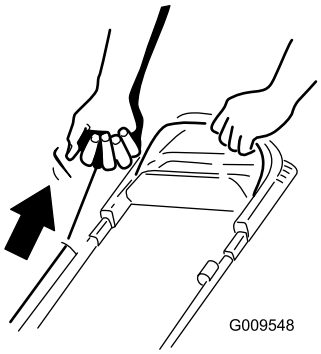

Figure 12

Note: If the machine does not start after several attempts, contact an Authorized Service Dealer.

Using the Self-propel Drive

To operate the self-propel drive, simply walk with your hands on the upper handle and your elbows at your sides, and the machine will automatically keep pace with you (Figure 13).

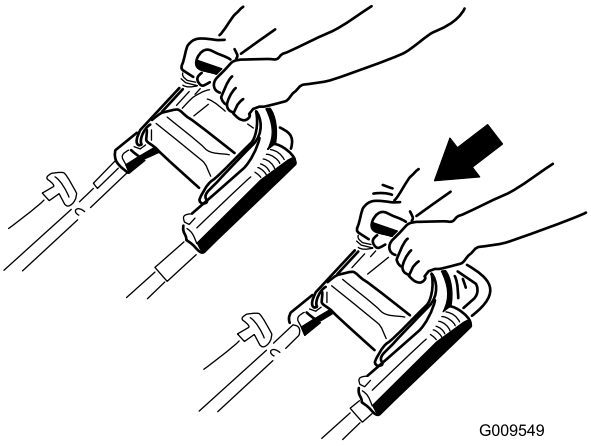

Figure 13

Note: If the machine does not freely roll backward after self-propelling, stop walking, hold your hands in place, and allow the machine to roll a couple of inches (centimeters) forward to disengage the wheel drive. You can also try reaching just under the upper handle to the metal handle and push the machine forward a couple of inches (centimeters). If the machine still does not roll backward easily, contact an Authorized Service Dealer.

Stopping the Engine

To stop the engine, release the blade-control bar.

Note: Remove the ignition key when you leave the machine (electric-start model only).

Important: When you release the blade-control bar, both the engine and blade should stop within 3 seconds. If they do not stop properly, stop using your machine immediately and contact an Authorized Service Dealer.

Recycling the Clippings

Your machine comes from the factory ready to recycle the grass and leaf clippings back into the lawn.

If the grass bag is on the machine and the bag-on-demand lever is in the bagging position, move the lever to the recycling position; refer to Operating the Bag-on-Demand Lever (page 10) before recycling the clippings. If the side-discharge chute is on the machine, remove it; refer to Removing the Side-discharge Chute (page 12) before recycling the clippings.

Bagging the Clippings

Use the grass bag when you want to collect grass and leaf clippings from the lawn.

⚠ WARNING

A worn grass bag could allow small stones and other similar debris to be thrown in the operator's or bystander's direction and result in serious personal injury or death to the operator or bystanders.

Check the grass bag frequently. If it is damaged, install a new Toro replacement bag.

If the side-discharge chute is on the machine, remove it; refer to Removing the Side-discharge Chute (page 12) before bagging the clippings. If the bag-on-demand lever is in the recycling position, move it to the bagging position; refer to Operating the Bag-on-Demand Lever (page 10).

⚠ WARNING

The blade is sharp; contacting the blade can result in serious personal injury.

Stop the engine and wait for all moving parts to stop before leaving the operating position.

Installing the Grass Bag

1. Raise and hold up the rear deflector (Figure 14).

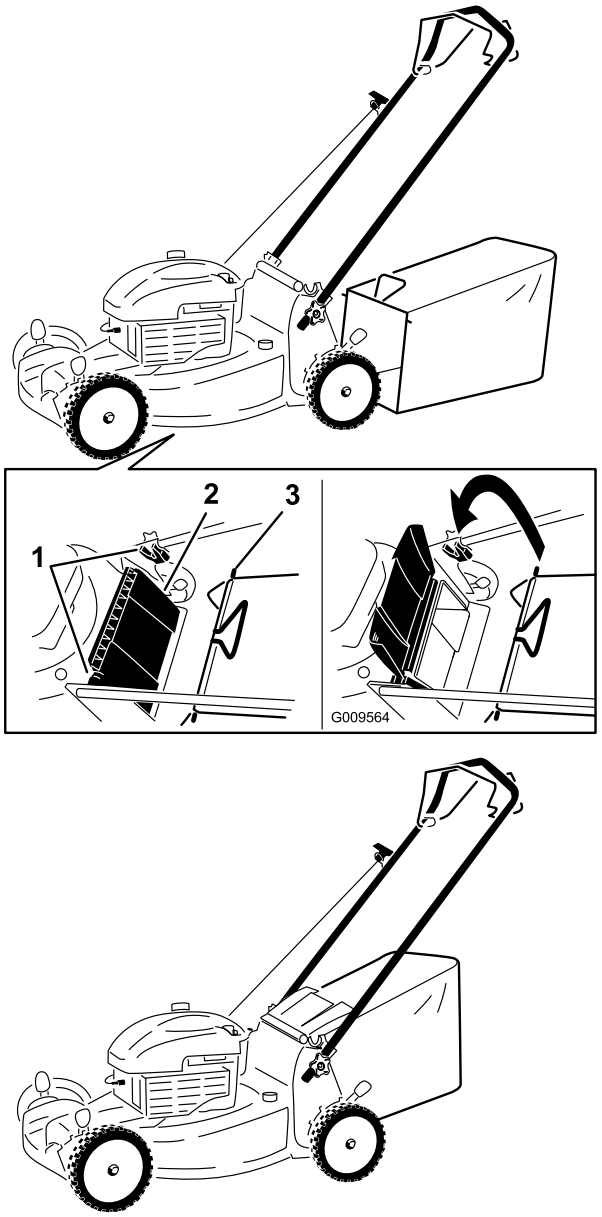

Figure 14

1. Notches
2. Rear deflector
3. Grass bag pin (2)

2. Install the grass bag, ensuring that the pins on the bag rest in the notches on the handle (Figure 14).
3. Lower the rear deflector.

Removing the Grass Bag

To remove the bag, reverse the steps above.

Operating the Bag-on-Demand Lever

The bag-on-demand feature allows you to either collect or recycle grass and leaf clippings while the grass bag is attached to the machine.

- For bagging the grass and leaf clippings, press the button on the bag-on-demand lever, and move the lever forward until the button on the lever pops up (Figure 15).

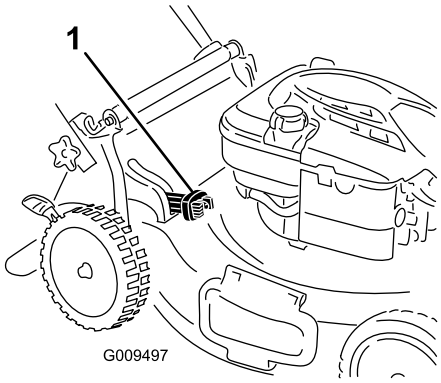

Figure 15

1. Bag-on-demand lever (in bagging position)

- For recycling the grass and leaf clippings, press the button on the lever and move the lever rearward until the button on the lever pops up.

  Important: For proper operation, remove any grass clippings and debris from the bag-on-demand door and the surrounding opening (Figure 16) before you move the bag-on-demand lever from one position to another.

  ⚠ WARNING

  The blade is sharp; contacting the blade can result in serious personal injury. Also, an open rear discharge area could allow small stones and other similar debris to be thrown in the operator's or bystander's direction and result in serious personal injury or death to the operator or bystanders.

  Stop the engine and wait for all moving parts to stop before cleaning the bag-on-demand door and the surrounding opening.

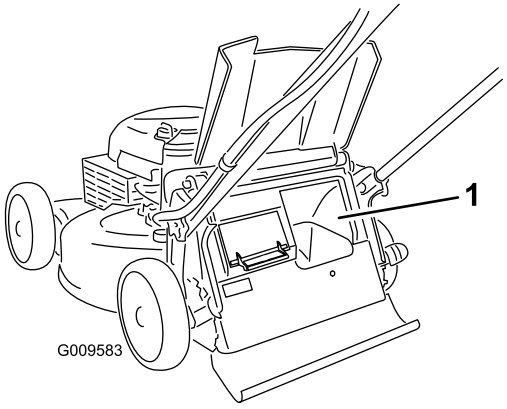

Figure 16

1. Clean here

Side-discharging the Clippings

Use the side discharge for cutting very tall grass.

If the grass bag is on the machine and the bag-on-demand lever is in the bagging position, move the lever to the recycling position; refer to Operating the Bag-on-Demand Lever (page 10).

⚠ WARNING

The blade is sharp; contacting the blade can result in serious personal injury.

Stop the engine and wait for all moving parts to stop before leaving the operating position.

Installing the Side-discharge Chute

Lift up the side deflector and install the side-discharge chute (Figure 17).



Figure 17

Removing the Side-discharge Chute

To remove the side-discharge chute, lift up the side deflector, remove the side-discharge chute, and lower the side-discharge deflector.

Operating Tips

General Mowing Tips

- Clear the area of sticks, stones, wire, branches, and other debris that the blade could hit.
- Avoid striking solid objects with the blade. Never deliberately mow over any object.
- If the machine strikes an object or starts to vibrate, immediately stop the engine, disconnect the wire from the spark plug, and examine the machine for damage.
- For best performance, install a new blade before the cutting season begins.
- Replace the blade when necessary with a Toro replacement blade.

Cutting Grass

- Cut only about a third of the grass blade at a time. Do not cut below the 54 mm (2-1/8 in) setting unless the grass is sparse or it is late fall when grass growth begins to slow down. Refer to Adjusting the Cutting Height (page 8).
- When cutting grass over 15 cm (6 in) tall, mow at the highest cutting height setting and walk slower; then mow again at a lower setting for the best lawn appearance. If the grass is too long, the machine may plug and cause the engine to stall.
- Mow only dry grass or leaves. Wet grass and leaves tend to clump on the yard and can cause the machine to plug or the engine to stall.

⚠ WARNING

Wet grass or leaves can cause serious injury if you slip and contact the blade. Mow only in dry conditions.

- Be aware of a potential fire hazard in very dry conditions, follow all local fire warnings, and keep the machine free of dry grass and leaf debris.
- Alternate the mowing direction. This helps disperse the clippings over the lawn for even fertilization.
- If the finished lawn appearance is unsatisfactory, try one or more of the following:
  - Replace the blade or have it sharpened.
  - Walk at a slower pace while mowing.
  - Raise the cutting height on your machine.
  - Cut the grass more frequently.
  - Overlap cutting swaths instead of cutting a full swath with each pass.
  - Set the cutting height on the front wheels one notch lower than the rear wheels. For example, set the front wheels at 54 mm (2-1/8-in) and the rear wheels at 64 mm (2-1/2 in).

Cutting Leaves

- After cutting the lawn, ensure that half of the lawn shows through the cut leaf cover. You may need to make more than one pass over the leaves.
- If there are more than 13 cm (5 in) of leaves on the lawn, set the front cutting height one or two notches higher than the rear cutting height.
- Slow down your mowing speed if the machine does not cut the leaves finely enough.

Maintenance

Note: Determine the left and right sides of the machine from the normal operating position.

Recommended Maintenance Schedule(s)

Maintenance Service Interval	Maintenance Procedure
After the first 5 hours	• Change the engine oil.
Before each use or daily	• Check the engine oil level. • Ensure that the engine stops within 3 seconds after releasing the blade-control bar. • Clean grass clippings and dirt from under the machine housing.
Every 25 hours	• Replace the air filter; replace it more frequently in dusty operating conditions. • Charge the battery for 24 hours (electric-start model only).
Before storage	• Empty the fuel tank before repairs as directed and before annual storage.
Yearly	• Change the engine oil. • Replace the blade or have it sharpened (more frequently if the edge dulls quickly). • Clean the air-cooling system; clean it more frequently in dusty operating conditions. Refer to your engine operator's manual. • Refer to your engine operator's manual for any additional yearly maintenance procedures.

Important: Refer to your engine operator's manual for additional maintenance procedures.

Note: Replacement parts are available from an Authorized Service Dealer (go to www.toro.com to find the nearest dealer) or at www.shoptoro.com.

Preparing for Maintenance

1. Stop the engine and wait for all moving parts to stop.
2. Disconnect the spark-plug wire from the spark plug (Figure 18) before performing any maintenance procedure.

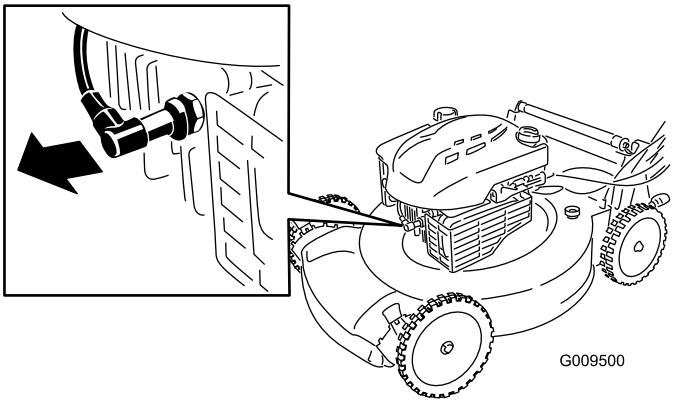

Figure 18

3. After performing the maintenance procedure(s), connect the spark-plug wire to the spark plug.

Important: Before tipping the machine to change the oil or replace the blade, allow the fuel tank to run dry through normal usage. If you must tip the machine prior to running out of fuel, use a hand fuel pump to remove the fuel. Always tip the machine onto its side, with the air filter up.

⚠ WARNING

Tipping the machine may cause the fuel to leak. Gasoline is flammable, explosive and can cause personal injury.

Run the engine dry or remove the gasoline with a hand pump; never siphon.

Replacing the Air Filter

Service Interval: Every 25 hours

1. Use a screw driver to open the air-filter cover (Figure 19).

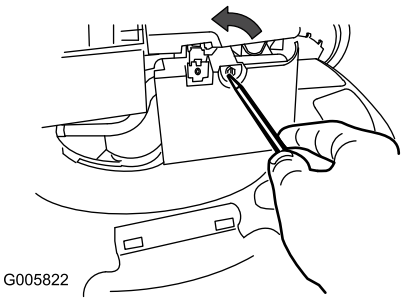

Figure 19

2. Replace the air filter (Figure 20).

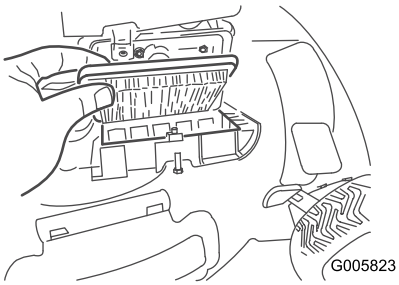

Figure 20

3. Install the cover.

Changing the Engine Oil

Service Interval: After the first 5 hours

Yearly

Note: Max. fill: 0.59 l (20 fl. oz.), type: SAE 30 detergent oil with an API service classification of SF, SG, SH, SJ, SL, or higher.

1. Move the machine to a level surface.
2. Ensure that the fuel tank contains little or no fuel so that fuel does not leak out when you tip the machine onto its side.
3. Run the engine a few minutes before changing the oil to warm it.

   Note: Warm oil flows better and carries more contaminants.
4. Disconnect the wire from the spark plug; refer to Preparing for Maintenance (page 13).
5. Place an oil drain pan beside the machine on the side nearest to the oil-fill tube.
6. Remove the dipstick from the oil-fill tube (Figure 21).

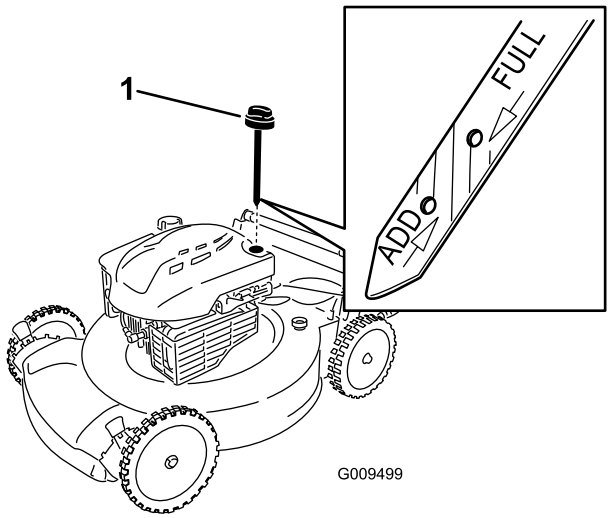

Figure 21

1. Dipstick

7. Tip the machine onto its side, with the oil-fill tube down, to drain the used oil through the oil-fill tube into the oil-drain pan (Figure 22).

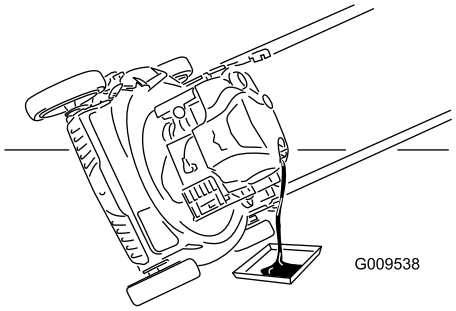

Figure 22

8. After draining the used oil, return the machine to the operating position.
9. Pour about 3/4 of the crankcase capacity of oil in the crankcase.

   Note: Max. fill: 0.59 l (20 fl. oz.), type: SAE 30 detergent oil with an API service classification of SF, SG, SH, SJ, SL, or higher.
10. Wait 3 minutes for the oil to settle.
11. Wipe the dipstick clean with a clean cloth.
12. Insert the dipstick fully into the oil-fill tube.
13. Remove the dipstick and read the oil level on the dipstick.
    - If the oil is below the **Add** mark on the dipstick, slowly pour a small amount of oil into the oil-fill tube, wait 3 minutes, and then repeat steps 11 through 13 until the oil level is at the **Full** mark on the dipstick.
    - If the oil is above the **Full** mark on the dipstick, drain the excess oil until the oil level is at the **Full** mark on the dipstick.

Important: **If the oil level in the crankcase is too low or too high and you run the engine, you may damage the engine.**

14. Install the dipstick into the oil-fill tube securely.
15. Dispose of the used oil properly at a local recycling center.

Charging the Battery

Service Interval: Every 25 hours

Electric-start model only

Charge the battery for 24 hours initially, then monthly (every 25 starts) or as needed. Always use the charger in a sheltered area and charge the battery at room temperature (70° or 22° C) whenever possible.

1. Connect the charger to the wire harness located below the ignition key (Figure 23).

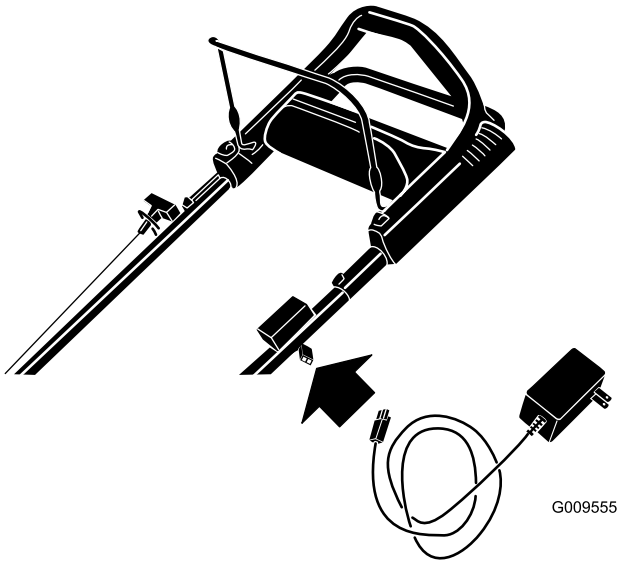

Figure 23

2. Plug the charger into a wall outlet.

   Note: When the battery no longer holds a charge, recycle or dispose of the lead-acid battery according to local codes.

Note: Your battery charger may have a 2-color LED display that indicates the following states of charging:

- A red light indicates that the charger is charging the battery.
- A green light indicates that the charger is fully charged or the charger is disconnected from the battery.
- A flashing light that alternates between red and green indicates that the battery is nearly fully charged. This state lasts only a few minutes until the battery is fully charged.

Replacing the Fuse

Electric-start model only

If the battery does not charge or the engine does not run with the electric starter, the fuse may be blown. Replace it with a 40-amp plug-in type fuse.

1. Raise the rear deflector and locate the battery compartment (Figure 24).

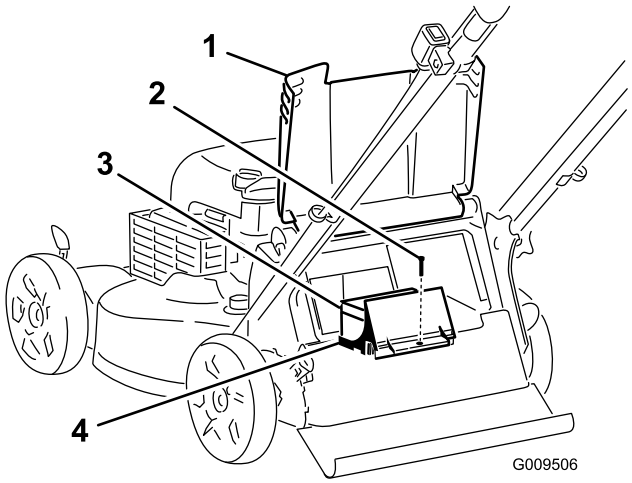

Figure 24

1. Rear deflector
2. Screw
3. Battery
4. Battery compartment

2. Wipe away any debris from the battery compartment area.
3. Remove the screw that secures the battery compartment, pull out the battery, and locate the fuse (Figure 25).

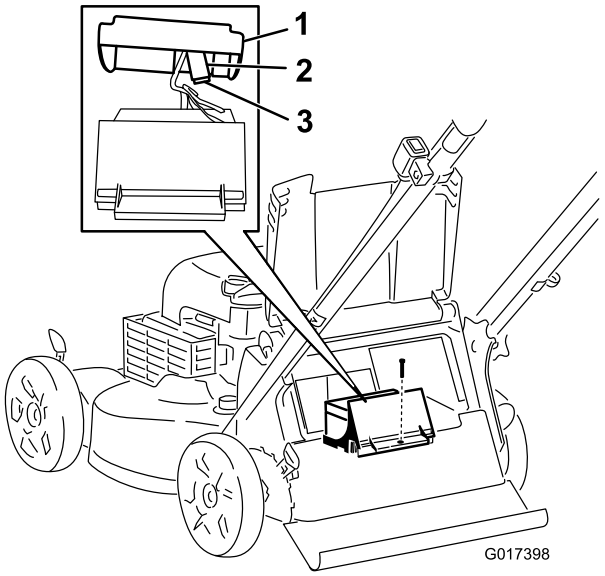

Figure 25

1. Cover
2. Fuse holder
3. Fuse

4. Replace the fuse in the fuse holder (Figure 25).

Note: Your machine comes with a spare fuse in the battery compartment.

5. Install the battery compartment with the screw that you removed in step 3.
6. Install the cover over the battery compartment.
7. Lower the rear deflector.

Replacing the Blade

Service Interval: Yearly

Important: ***You will need a torque wrench to install the blade properly.*** **If you do not have a torque wrench or are uncomfortable performing this procedure, contact an Authorized Service Dealer.**

Examine the blade whenever you run out of gasoline. If the blade is damaged or cracked, replace it immediately. If the blade edge is dull or nicked, have it sharpened and balanced, or replace it.

⚠ WARNING

The blade is sharp; contacting the blade can result in serious personal injury.

Wear gloves when servicing the blade.

1. Refer to Preparing for Maintenance.
2. Tip the machine onto its side with the air filter up.
3. Use a block of wood to hold the blade steady (Figure 26).

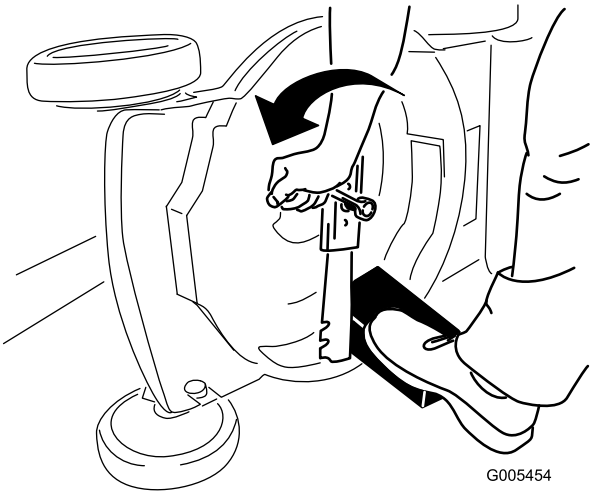

Figure 26

4. Remove the blade, saving all mounting hardware (Figure 26).
5. Install the new blade and all mounting hardware (Figure 27).

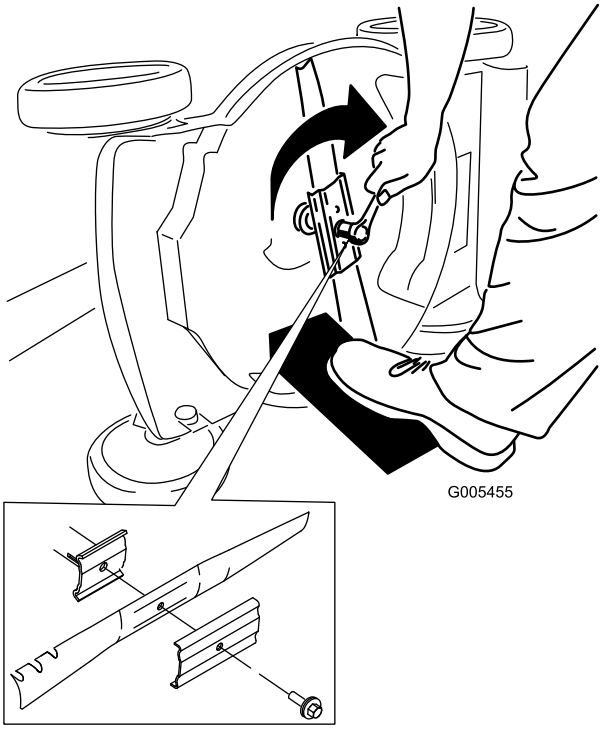

Figure 27

Important: **Position the curved ends of the blade to point toward the machine housing.**

6. Use a torque wrench to tighten the blade bolt to 82 N-m (60 ft-lb).

Important: **A bolt torqued to 82 N-m (60 ft-lb) is very tight. While holding the blade with a block of wood, put your weight behind the ratchet or wrench and tighten the bolt securely. This bolt is very difficult to overtighten.**

Adjusting the Self-propel Drive Cable

Whenever you install a new self-propel cable or if the self-propel drive is out of adjustment, adjust the self-propel drive cable.

1. Loosen the cable-support nut (Figure 28).

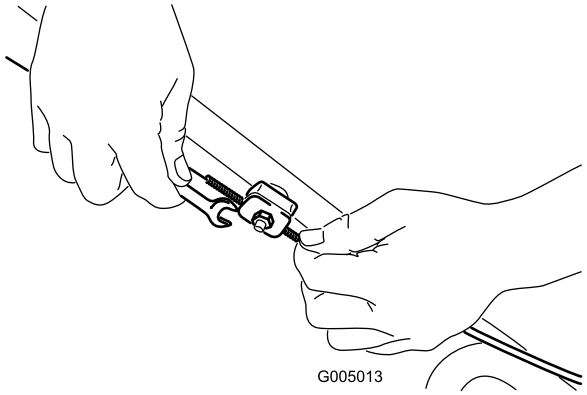

Figure 28

This figure is simplified for the purpose of clarity.

2. Pull down the cable jacket (toward the machine) until there is no slack in the cable (Figure 29).

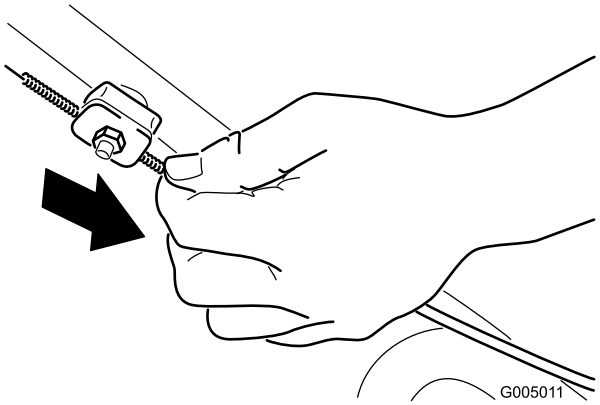

Figure 29

3. Tighten the nut on the cable support.

Cleaning under the Machine Housing

Service Interval: Before each use or daily

⚠ WARNING

The machine may dislodge material from under the machine housing.

- **Wear eye protection.**
- **Stay in the operating position (behind the handle) when the engine is running.**
- **Do not allow bystanders in the area.**

For best results, clean under the machine housing soon after you have completed mowing.

1. Lower the machine to its lowest cutting-height setting; refer to Adjusting the Cutting Height (page 8).
2. Move the machine onto a flat paved surface.
3. Wash out the area under the rear deflector where the clippings go from the housing to the grass bag.

   Note: Wash out the area with the bag-on-demand in both the fully forward and fully rearward positions.
4. Attach a garden hose that is connected to a water supply to the washout port on the machine housing (Figure 30).

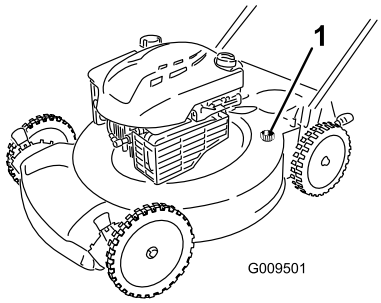

Figure 30

1. Washout port

5. Turn the water on.
6. Start the engine and run it until there are no more clippings that come out from under the machine housing.
7. Stop the engine.
8. Shut off the water and disconnect the garden hose from the machine.
9. Start the engine and run it for a few minutes to dry the housing to prevent it from rusting.
10. Allow the engine to cool before storing the machine in an enclosed area.

Storage

Store the machine in a cool, clean, dry place.

Preparing the Machine for Storage

⚠ WARNING

Gasoline vapors can explode.

- **Do not store gasoline more than 30 days.**
- **Do not store the machine in an enclosure near an open flame.**
- **Allow the engine to cool before storing it.**

1. On the last refueling of the year, add fuel stabilizer to the fuel as directed by the engine manufacturer.
2. Dispose of any unused fuel properly. Recycle it according to local codes, or use it in your automobile.

   Note: Old fuel in the fuel tank is the leading cause of hard starting. Do not store fuel without stabilizer more than 30 days, and do not store stabilized fuel more than 90 days.
3. Run the machine until the engine stops from running out of fuel.
4. Start the engine again.
5. Allow the engine to run until it stops. When you can no longer start the engine, it is sufficiently dry.
6. Disconnect the wire from the spark plug.
7. Remove the spark plug, add 30 ml (1 oz.) of oil through the spark plug hole, and pull the starter rope slowly several times to distribute oil throughout the cylinder to prevent cylinder corrosion during the off-season.
8. Loosely install the spark plug.
9. Tighten all nuts, bolts, and screws.
10. Charge the battery for 24 hours, then unplug the battery charger an store the machine in an unheated area. If you must store the machine in a heated area, you must charge the battery every 90 days (electric-start model only).

Folding the Handle

⚠ WARNING

Folding or unfolding the handle improperly can damage the cables, causing an unsafe operating condition.

- **Do not damage the cables when folding or unfolding the handle.**
- **If a cable is damaged, contact an Authorized Service Dealer.**

1. Remove the ignition key (electric-start model only).
2. Loosen the handle knobs until you can move the upper handle freely.
3. Fold the upper handle forward as shown in Figure 31.

   Important: Route the cables to the outside of the handle knobs as you fold the handle.

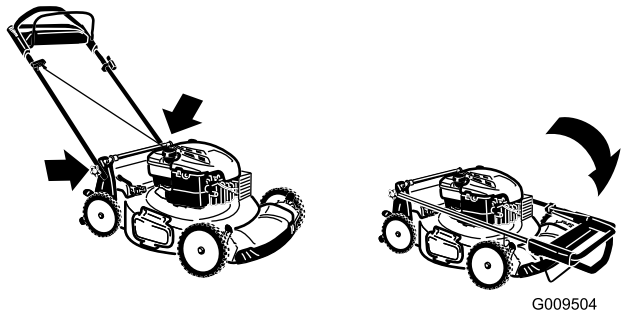

Figure 31

4. To unfold the handle, reverse the steps above.

Removing the Machine from Storage

1. Charge the battery for 24 hours (electric-start model only).
2. Connect the wire to the spark plug.

International Distributor List

Distributor:	Country:	Phone Number:	Distributor:	Country:	Phone Number:
Atlantis Su ve Sulama Sisstemleri Lt	Turkey	90 216 344 86 74	Jean Heybroek b.v.	Netherlands	31 30 659 4611
Balama Prima Engineering Equip.	Hong Kong	852 2155 2163	Maquiver S.A.	Colombia	57 1 236 4079
B-Ray Corporation	Korea	82 32 551 2076	Maruyama Mfg. Co. Inc.	Japan	81 3 3252 2285
Casco Sales Company	Puerto Rico	787 788 8383	Agrolanc Kft	Hungary	36 27 539 640
Ceres S.A.	Costa Rica	506 239 1138	Mountfield a.s.	Czech Republic	420 255 704 220
CSSC Turf Equipment (pvt) Ltd.	Sri Lanka	94 11 2746100	Munditol S.A.	Argentina	54 11 4 821 9999
Cyril Johnston & Co.	Northern Ireland	44 2890 813 121	Oslinger Turf Equipment SA	Ecuador	593 4 239 6970
Equiver	Mexico	52 55 539 95444	Oy Hako Ground and Garden Ab	Finland	358 987 00733
Femco S.A.	Guatemala	502 442 3277	Parkland Products Ltd.	New Zealand	64 3 34 93760
G.Y.K. Company Ltd.	Japan	81 726 325 861	Prochaska & Cie	Austria	43 1 278 5100
Geomechaniki of Athens	Greece	30 10 935 0054	RT Cohen 2004 Ltd.	Israel	972 986 17979
Guandong Golden Star	China	86 20 876 51338	Riversa	Spain	34 9 52 83 7500
Hako Ground and Garden	Sweden	46 35 10 0000	Sc Svend Carlsen A/S	Denmark	45 66 109 200
Hako Ground and Garden	Norway	47 22 90 7760	Solvert S.A.S.	France	33 1 30 81 77 00
Hayter Limited (U.K.)	United Kingdom	44 1279 723 444	Spypros Stavrinides Limited	Cyprus	357 22 434131
Hydroturf Int. Co Dubai	United Arab Emirates	97 14 347 9479	Surge Systems India Limited	India	91 1 292299901
Hydroturf Egypt LLC	Egypt	202 519 4308	T-Markt Logistics Ltd.	Hungary	36 26 525 500
Ibea S.P.A.	Italy	39 0331 853611	Toro Australia	Australia	61 3 9580 7355
Irriamc	Portugal	351 21 238 8260	Toro Europe NV	Belgium	32 14 562 960
Irrigation Products Int'l Pvt Ltd.	India	86 22 83960789			

European Privacy Notice

The Information Toro Collects
Toro Warranty Company (Toro) respects your privacy. In order to process your warranty claim and contact you in the event of a product recall, we ask you to share certain personal information with us, either directly or through your local Toro company or dealer.

The Toro warranty system is hosted on servers located within the United States where privacy law may not provide the same protection as applies in your country.

BY SHARING YOUR PERSONAL INFORMATION WITH US, YOU ARE CONSENTING TO THE PROCESSING OF YOUR PERSONAL INFORMATION AS DESCRIBED IN THIS PRIVACY NOTICE.

The Way Toro Uses Information
Toro may use your personal information to process warranty claims, to contact you in the event of a product recall and for any other purpose which we tell you about. Toro may share your information with Toro's affiliates, dealers or other business partners in connection with any of these activities. We will not sell your personal information to any other company. We reserve the right to disclose personal information in order to comply with applicable laws and with requests by the appropriate authorities, to operate our systems properly or for our own protection or that of other users.

Retention of your Personal Information
We will keep your personal information as long as we need it for the purposes for which it was originally collected or for other legitimate purposes (such as regulatory compliance), or as required by applicable law.

Toro's Commitment to Security of Your Personal Information
We take reasonable precautions in order to protect the security of your personal information. We also take steps to maintain the accuracy and current status of personal information.

Access and Correction of your Personal Information
If you would like to review or correct your personal information, please contact us by email at legal@toro.com.

Australian Consumer Law

Australian customers will find details relating to the Australian Consumer Law either inside the box or at your local Toro Dealer.

The Toro Warranty

Conditions and Products Covered

The Toro Company and its affiliate, Toro Warranty Company, pursuant to an agreement between them, jointly promise to the original purchaser* to repair the Toro Products listed below if defective in materials or workmanship.

The following time periods apply from the date of purchase:

Products	Warranty Period
Walk Power Mowers	
• Cast Deck	5 years Residential Use[2] 45 Days Commercial Use
• Engine	5 years GTS Promise See engine manufacturer's warranty[1]
• Steel Deck	2 years Residential Use[2] 45 Days Commercial Use
• Engine	2 years GTS Promise See engine manufacturer's warranty[1]
Electric Hand Held Products	2 year limited warranty
Snowthrowers	
• Single Stage	2 years Residential Use[2] 45 Days Commercial Use
• Two Stage	2 years Residential Use[2] 45 Days Commercial Use
• Electric	2 years Residential Use[2]
All Ride-On Units Below	
• Engine	See engine manufacturer's warranty[1] 1 year Parts only
• Attachments	1 year
Rear Engine Riders	2 years Residential Use[2] 90 Days Commercial Use
Lawn & Garden Tractors	2 years Residential Use[2] 90 Days Commercial Use
TimeCutter Z Mowers	3 years Residential Use[2] 30 Days Commercial Use
TITAN Mowers	3 years or 240 hours[3]
• Frame	Lifetime (original owner only)[4]
TITAN MX Mowers	3 years or 400 hours[3]
• Frame	Lifetime (original owner only)[4]
Z Master Mowers — 2000 Series	5 years or 1200 hours[3]
• Frame	Lifetime (original owner only)[4]

*Original Purchaser means the person who originally purchased the Toro Product.

[1]Some engines used on Toro Products are warranted by the engine manufacturer.

[2]Residential use means use of the product on the same lot as your home. Use at more than one location is considered commercial use and the commercial use warranty would apply.

[3]Whichever occurs first.

[4]Lifetime Frame Warranty - If the main frame, consisting of the parts welded together to form the tractor structure that other components such as the engine are secured to, cracks or breaks in normal use, it will be repaired or replaced, at Toro's option, under warranty at no cost for parts and labor. Frame failure due to misuse or abuse and failure or repair required due to rust or corrosion are not covered.

This warranty includes the cost of parts and labor, but you must pay transportation costs.

Warranty may be denied if the hour meter is disconnected, altered, or shows signs of being tampered with.

Owner Responsibilities

You must maintain your Toro Product by following the maintenance procedures described in the *Operator's Manual*. Such routine maintenance, whether performed by a dealer or by you, is at your expense.

Instructions for Obtaining Warranty Service

If you think that your Toro Product contains a defect in materials or workmanship, follow this procedure:

1. Contact your seller to arrange service of the product. If for any reason it is impossible for you to contact your seller, you may contact any Toro Authorized Distributor to arrange service.
2. Bring the product and your proof of purchase (sales receipt) to the Service Dealer. If for any reason you are dissatisfied with the Service Dealer's analysis or with the assistance provided, contact us at:

   Customer Care Department, RLC Division
   The Toro Company
   8111 Lyndale Avenue South
   Bloomington, MN 55420-1196
   Manager: Technical Product Support: 001–952–887–8248

   See attached Distributor List

Items and Conditions Not Covered

This express warranty does not cover the following:

- Cost of regular maintenance service or wear parts, such as blades, rotor blades (paddles), scraper blades, belts, fuel, lubricants, oil changes, spark plugs, cable/linkage or brake adjustments
- Any product or part which has been altered or misused and requires replacement or repair due to accidents or lack of proper maintenance
- Repairs necessary due to failure to use fresh fuel (less than one month old), or failure to properly prepare the unit prior to any period of non-use over one month
- Engine and transmission. These are covered by the appropriate manufacturer's guarantees with separate terms and conditions

All repairs covered by these warranties must be performed by an Authorized Toro Service Dealer using Toro approved replacement parts.

General Conditions

The purchaser is covered by the national laws of each country. The rights to which the purchaser is entitled with the support of these laws are not restricted by this warranty.