Form No. 3375-165 Rev A

48in and 52in Recycler® Kit

for Z Master® G3 and GrandStand® Mowers

Model No. 115-7466

Model No. 115-7467

Installation Instructions

Note: Determine the left and right sides of the machine from the normal operating position.

Safety

Side Discharge or Mulch Grass

⚠ WARNING

Without the grass deflector, discharge cover, or complete grass catcher assembly mounted in place, you and others are exposed to blade contact and thrown debris. Contact with rotating mower blade(s) and thrown debris will cause injury or death.

- **Never remove the grass deflector from the mower because the grass deflector routes material down toward the turf. If the grass deflector is ever damaged, replace it immediately.**
- **Never put your hands or feet under the mower.**
- **Never try to clear the discharge area or mower blades unless you disengage the power take off (PTO) lever and turn the ignition key to off. Also remove the key and pull the wire off the spark plug(s).**

Ensure the mower has the hinged grass deflector that disperses clippings to the side and down toward the turf, while in side discharge mode.

To mulch grass clippings, the baffles must be installed into the mower as shown in the following steps.

© 2012—The Toro® Company
8111 Lyndale Avenue South
Bloomington, MN 55420

Register at www.Toro.com.

Original Instructions (EN)
Printed in the USA.
All Rights Reserved

3375-165 A

Loose Parts

Use the chart below to verify that all parts have been shipped.

Procedure	Description	Qty.	Use
1	No parts required	–	Raise the mower for access (GrandStand Mowers Only).
2	No parts required	–	Prepare the mower.
3	No parts required	–	Remove the existing blades.
4	No parts required	–	Remove the existing baffles.
5	No parts required	–	Drill holes for G3 mower decks.
6	Discharge plate Carriage bolt (3/8 x 1-1/4 inches) Carriage bolt (5/16 x 7/8 inch) Flange nut (small flange) (3/8 inch) Flange nut (5/16 inch)	1 2 1 2 1	Install the discharge plate.
7	Left baffle Center baffle Right baffle Flange nut (small flange) (3/8 inch) Carriage bolt (3/8 x 1 inch) Bolt (3/8 x 1 inch) Flange nut (large flange) (3/8 inch)	1 1 1 7 7 2 2	Install the baffles for 48in mower decks.
8	Left baffle Center baffle Right baffle Flange nut (small flange) (3/8 inch) Carriage bolt (3/8 x 1 inch) Bolt (3/8 x 1 inch) Flange nut (large flange) (3/8 inch)	1 1 1 8 7 2 1	Install the baffles for 52 inch mower decks.
9	Recycler blades	3	Install the new blades.
10	No parts required	–	Tighten all fasteners.

1

Raising the Mower for Access (GrandStand Mowers Only)

No Parts Required

Procedure

The front of the mower can be raised and supported on its back for access under the machine for maintenance.

⚠ WARNING

The machine could fall onto someone and cause serious injury or death

- **Always turn the engine off, set the parking brake, and remove the key before performing any maintenance to the mower.**
- **Use extreme caution when the machine is raised and supported on its back. The blades and moving parts are exposed and could cause injury.**
- **Use this position only for cleaning, removing blades or baffles and maintenance.**

1. Disengage the PTO and set the parking brake.
2. Stop the engine, remove the key, and wait for all moving parts to stop before leaving the operating position.
3. Remove the battery from the machine.
   A. Lift the black rubber cover on the negative cable. Disconnect the negative battery cable from the negative (-) battery terminal (Figure 1).
   B. Slide the red terminal boot off the positive (red) battery terminal. Then remove the positive (red) battery cable (Figure 1).
   C. Remove the battery hold down plate (Figure 1) and remove the battery.

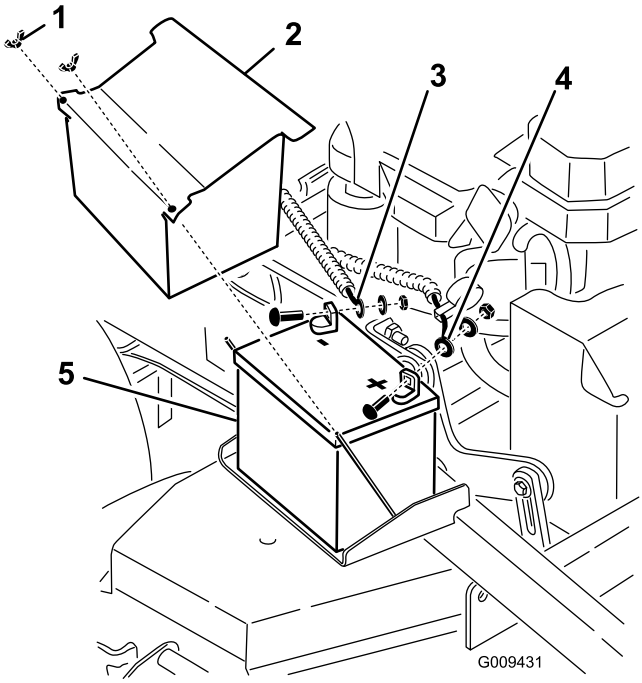

Figure 1
GrandStand Mowers Only

1. Wing nut
2. Battery cover
3. Negative battery cable
4. Positive battery cable
5. Battery

4. Raise the mower deck to the highest position.
5. Drain the fuel from the fuel tank. Refer to Draining the Fuel Tank in the *Operator's Manual*.
6. Remove the cap of the hydraulic tank and place a piece of plastic over the opening and install the hydraulic cap. This will seal the hydraulic tank and prevent it from leaking out.

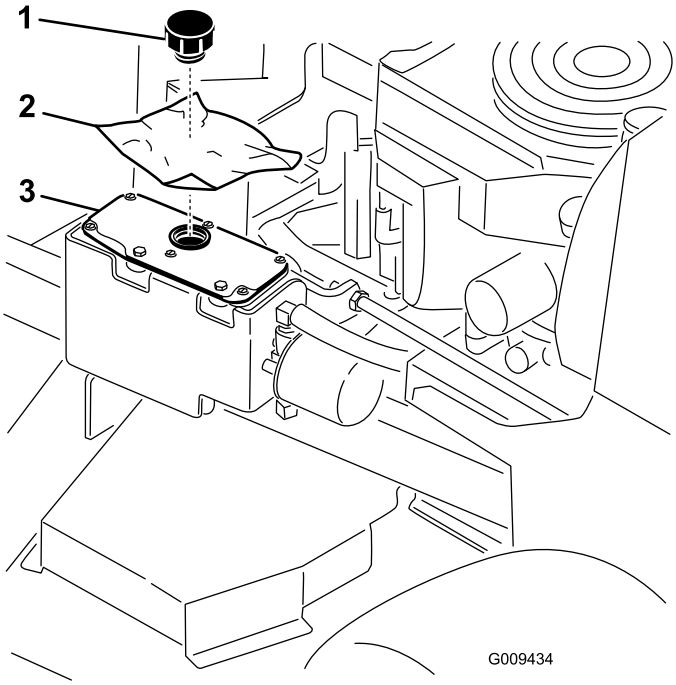

Figure 2
Grandstand Mowers Only

1. Cap
2. Piece of plastic
3. Hydraulic tank

7. With two people, raise the front of the mower so it rests on the drive tires and the platform in the up position.
8. Perform maintenance on the machine.

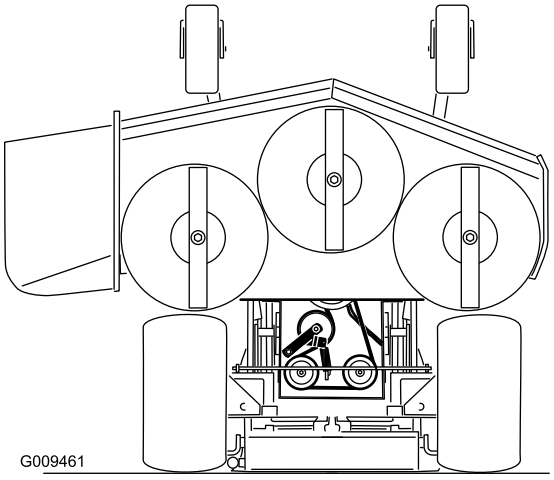

Figure 3
GrandStand Mowers Only

1. Ensure the battery is removed
2. With two people, lift the front end of the mower (ensure the mower deck is in the highest position)

2

Preparing the Mower

No Parts Required

Procedure

1. Thoroughly clean the mower deck. All debris must be removed to ensure the baffles will fit properly against the mower deck.
2. Repair all bent or damaged areas of the mower deck and replace any missing parts.

3

Removing the Existing Blades

No Parts Required

Procedure

Remove the existing blades from the spindles (Figure 4).

Note: Save the blades for use when in side discharging mode. Use the blade bolt and washer for installing the recycler blades in procedure .

⚠ WARNING

A blade is sharp. Contact with sharp blade can cause serious personal injury.

Wear gloves or wrap sharp edges of the blade with a rag.

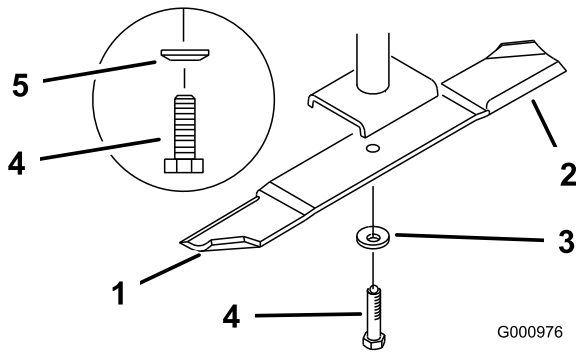

Figure 4

1. Sail area of blade
2. Blade
3. Curved washer
4. Blade bolt
5. Cone towards the bolt head

4

Removing the Existing Baffles

No Parts Required

Procedure

Note: In the steps below, the bolts are threaded into the mower deck. Remove the nuts first before removing bolts.

1. Remove the flange nuts holding the baffles in place (Figure 5 or Figure 6).
2. Remove the cam lock and washer by unscrewing it from the adjustable flow baffle (Figure 5 or Figure 6).

   Note: For certain models of mower decks, remove the nut and bolt if no cam lock is present.
3. Remove the six bolts holding the baffles in place (Figure 5 or Figure 6).

   Note: Save the baffles and hardware for use when changing to side discharging mode.
4. After removing the discharge baffle, install the nuts and bolts back into the mower deck (Figure 5).

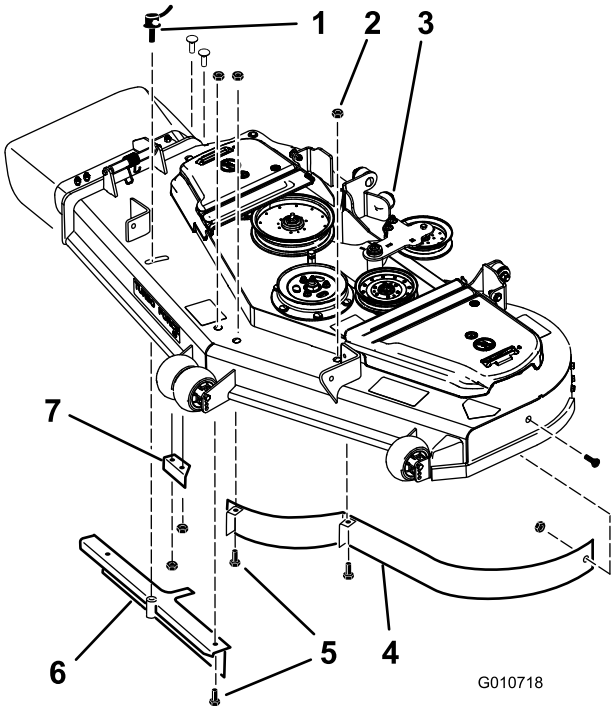

Figure 5

Z Master Mowers Only

1. Cam lock
2. Flange Nut
3. Mower deck
4. Left front baffle
5. Bolt
6. Adjustable Flow Baffle
7. Discharge baffle

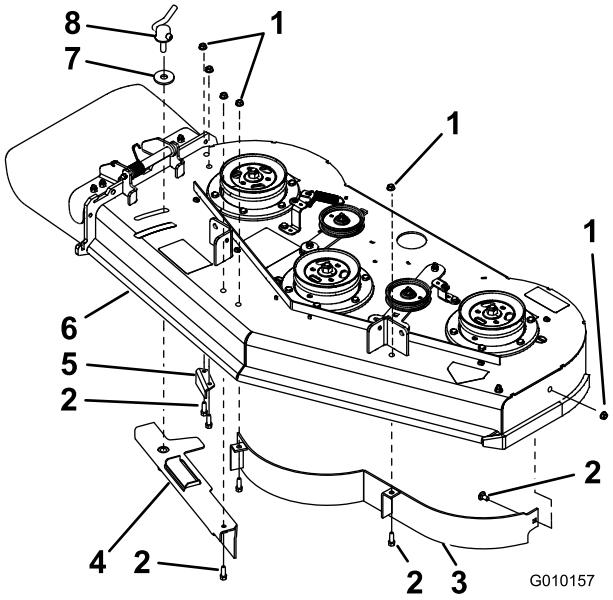

Figure 6

GrandStand Mowers Only

1. Flange Nut
2. Bolt
3. Left front baffle
4. Adjustable Flow Baffle
5. Discharge baffle
6. Mower deck
7. Washer
8. Cam lock

5

Drilling Holes for G3 Mower Decks

No Parts Required

Procedure

1. Check the hole diameters in the locations shown in Figure 7.
2. If there are no holes in the side discharge mounting bracket, use the discharge plate as a template and mark the location of the holes.

   Note: For the upper rear hole, use the upper part of the slot to mark the location of the hole. This will allow for clearance of the nut when the discharge plate is installed.
3. Drill the holes to the specified diameter in the locations shown in Figure 7.

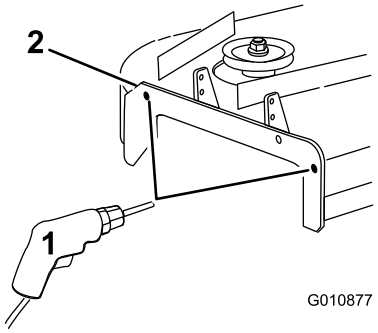

Figure 7

1. Drill this hole to 7/16 inch diameter
2. Side discharge mounting bracket

6

Installing the Discharge Plate

Parts needed for this procedure:

1	Discharge plate
2	Carriage bolt (3/8 x 1-1/4 inches)
1	Carriage bolt (5/16 x 7/8 inch)
2	Flange nut (small flange) (3/8 inch)
1	Flange nut (5/16 inch)

Procedure

1. Install the discharge plate to the outside of the mounting bracket with 2 carriage bolts (3/8 x 1-1/4 inches) and 2 flange nuts (small flange) (3/8 inch) (Figure 8).
2. Install the tab to the inside of the mower deck with 1 carriage bolt (5/16 x 7/8 inch) and 1 flange nut (5/16 inch) (small flange) (Figure 8).

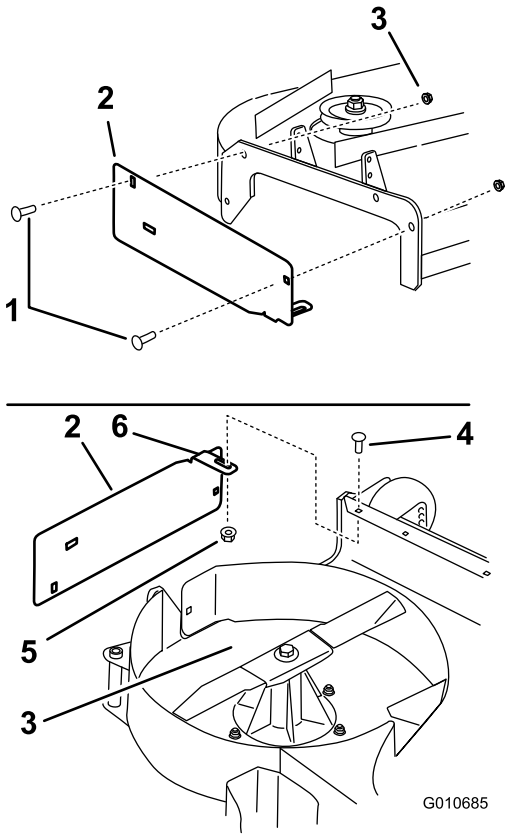

Figure 8

1. Carriage bolt (3/8 x 1-1/4 inches)
2. Discharge plate
3. Flange nut (small flange) (3/8 inch)
4. Carriage bolt (5/16 x 7/8 inch)
5. Flange nut (5/16 inch)
6. Ensure the tab is positioned inside the mower deck

7

Installing the Baffles for 48 inch Mower Decks

Parts needed for this procedure:

1	Left baffle
1	Center baffle
1	Right baffle
7	Flange nut (small flange) (3/8 inch)
7	Carriage bolt (3/8 x 1 inch)
2	Bolt (3/8 x 1 inch)
2	Flange nut (large flange) (3/8 inch)

Procedure

Note: Loosely install the baffles to align the baffles with all holes in the mower (Figure 9).

1. Position the right baffle into the mower.
2. Loosely install the right baffle to the discharge plate with 1 carriage bolt (3/8 x 1 inch) and a flange nut (small flange) (3/8 inch) (Figure 9).
3. Loosely install the right baffle to the top of the mower deck with 1 carriage bolt (3/8 x 1 inch) and 1 flange nut (large flange), (3/8 inch) (Figure 9). Refer to Figure 10 for the correct holes to use and the position of the baffles.
4. Loosely install the right baffle to the mower deck with 1 carriage bolt (3/8 x 1 inch) and 1 flange nut (small flange) (3/8 inch) (Figure 9).
5. Position the left baffle into the mower.
6. Loosely install the left baffle to the top of the mower deck with 1 bolt (3/8 x 1 inch) and 1 flange nut (small flange) (3/8 inch) (Figure 9). Refer to Figure 10 for the correct holes to use and the position of the baffles.
7. Loosely install the left baffle to the mower deck with 1 carriage bolt (3/8 x 1 inch) and 1 flange nut (small flange) (3/8 inch) (Figure 9).
8. Loosely install the left baffle to the side of the mower deck with 1 carriage bolt (3/8 x 1 inch) and 1 flange nut (large flange) (3/8 inch) (Figure 9).

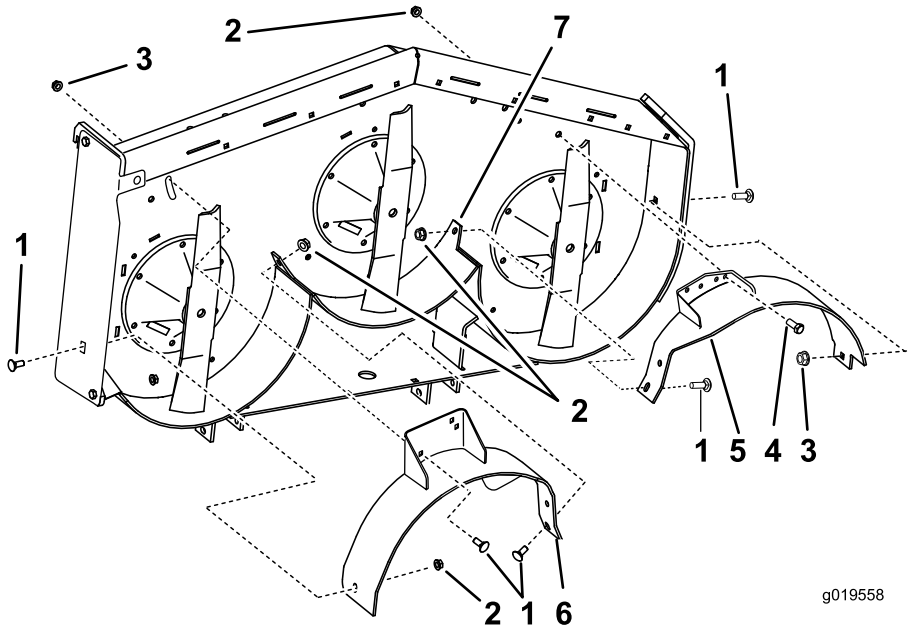

Figure 9

1. Carriage bolt (3/8 x 1 inch)
2. Flange nut (small flange) (3/8 inch)
3. Flange nut (large flange) (3/8 inch)
4. Bolt (3/8 x 1 inch)
5. Left baffle
6. Right baffle
7. Welded baffle

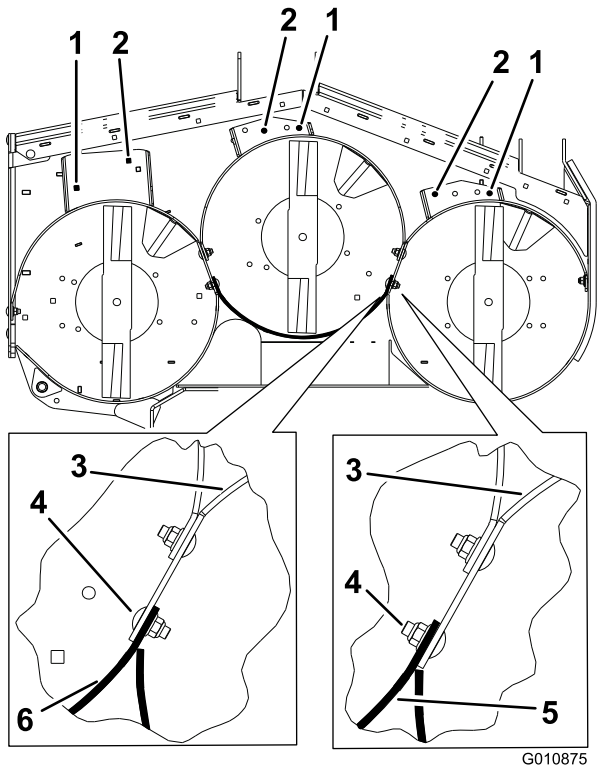

Figure 10

48 inch mower deck shown

1. Use these holes for GrandStand Mowers
2. Use these holes for G3 Z Master Mowers
3. Left baffle
4. Note the position of the hardware (48 inch mowers only)
5. Welded baffle for GrandStand Mowers
6. Welded baffle for G3 Z Master Mowers

9. Position the center baffle into the mower.
10. Loosely install the center baffle to the left baffle with 1 carriage bolt (3/8 x 1 inch) and 1 flange nut (small flange) (3/8 inch) (Figure 11). Refer to Figure 10 for the correct holes to use and the position of the baffles.
11. Loosely install the center baffle to the right baffle with 1 carriage bolt (3/8 x 1 inch) and 1 flange nut (small flange) (3/8 inch) (Figure 11).
12. Loosely install the center baffle to the top of the mower deck with 1 bolt (3/8 x 1 inch) and 1 flange nut (small flange) (3/8 inch) (Figure 11).

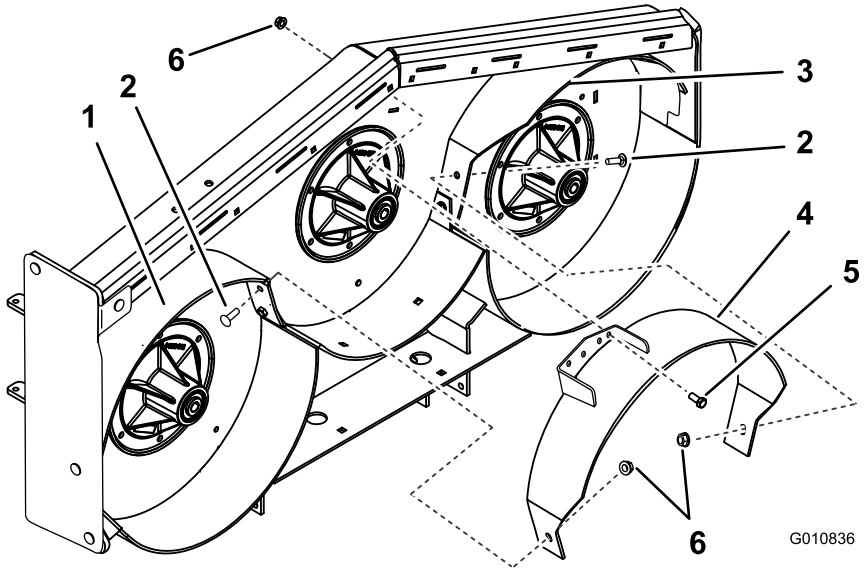

Figure 11

GrandStand mower deck shown

1. Right baffle
2. Carriage bolt (3/8 x 1 inch)
3. Left baffle
4. Center baffle
5. Bolt (3/8 x 1 inch)
6. Flange nut (small flange) (3/8 inch)

8

Installing the Baffles for 52 inch Mower Decks

Parts needed for this procedure:

1	Left baffle
1	Center baffle
1	Right baffle
8	Flange nut (small flange) (3/8 inch)
7	Carriage bolt (3/8 x 1 inch)
2	Bolt (3/8 x 1 inch)
1	Flange nut (large flange) (3/8 inch)

Procedure

Note: Loosely install the baffles to align the baffles with all holes in the mower (Figure 9).

1. Position the right baffle into the mower.
2. Loosely install the right baffle to the discharge plate with 1 carriage bolt (3/8 x 1 inch) and a flange nut (small flange) (3/8 inch) (Figure 12).
3. Loosely install the right baffle to the top of the mower deck with 1 carriage bolt (3/8 x 1 inch) and 1 flange nut (large flange), (3/8 inch) (Figure 12). Refer to Figure 13 for the correct holes to use and the position of the baffles.
4. Loosely install the right baffle to the mower deck with 1 carriage bolt (3/8 x 1 inch) and 1 flange nut (small flange) (3/8 inch) (Figure 12).
5. Position the left baffle into the mower.
6. Loosely install the left baffle to the top of the mower deck with 1 bolt (3/8 x 1 inch) and 1 flange nut (small flange) (3/8 inch) (Figure 12). Refer to Figure 13 for the correct holes to use and the position of the baffles.
7. Loosely install the left baffle to the mower deck with 1 carriage bolt (3/8 x 1 inch) and 1 flange nut (small flange) (3/8 inch) (Figure 12).
8. Loosely install the left baffle to the side of the mower deck with 1 carriage bolt (3/8 x 1 inch) and 1 flange nut (small flange) (3/8 inch) (Figure 12).

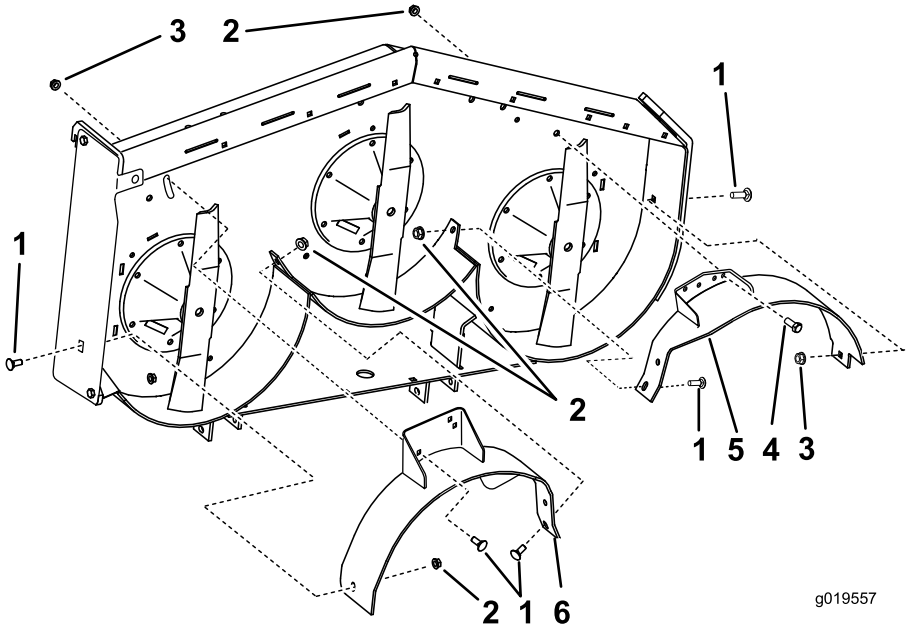

Figure 12

1. Carriage bolt (3/8 x 1 inch)
2. Flange nut (small flange) (3/8 inch)
3. Flange nut (large flange) (3/8 inch)
4. Bolt (3/8 x 1 inch)
5. Left baffle
6. Right baffle

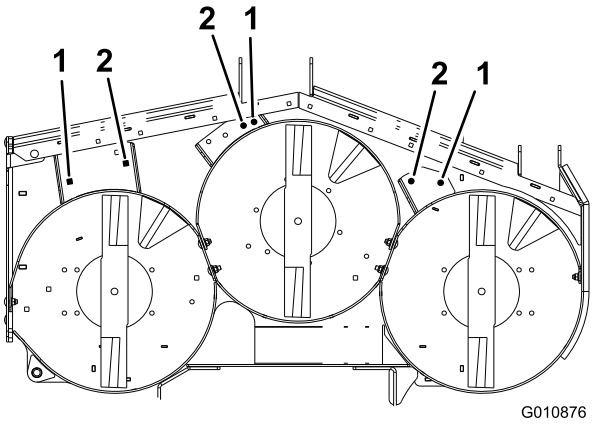

Figure 13

G3 Z Master mower deck shown

1. Use these holes for GrandStand Mowers
2. Use these holes for G3 Z Master Mowers

9. Position the center baffle into the mower.
10. Loosely install the center baffle to the left baffle with 1 carriage bolt (3/8 x 1 inch) and 1 flange nut (small flange) (3/8 inch) (Figure 14). Refer to Figure 13 for the correct holes to use and the position of the baffles.
11. Loosely install the center baffle to the right baffle with 1 carriage bolt (3/8 x 1 inch) and 1 flange nut (small flange) (3/8 inch) (Figure 14).
12. Loosely install the center baffle to the top of the mower deck with 1 bolt (3/8 x 1 inch) and 1 flange nut (small flange) (3/8 inch) (Figure 14).

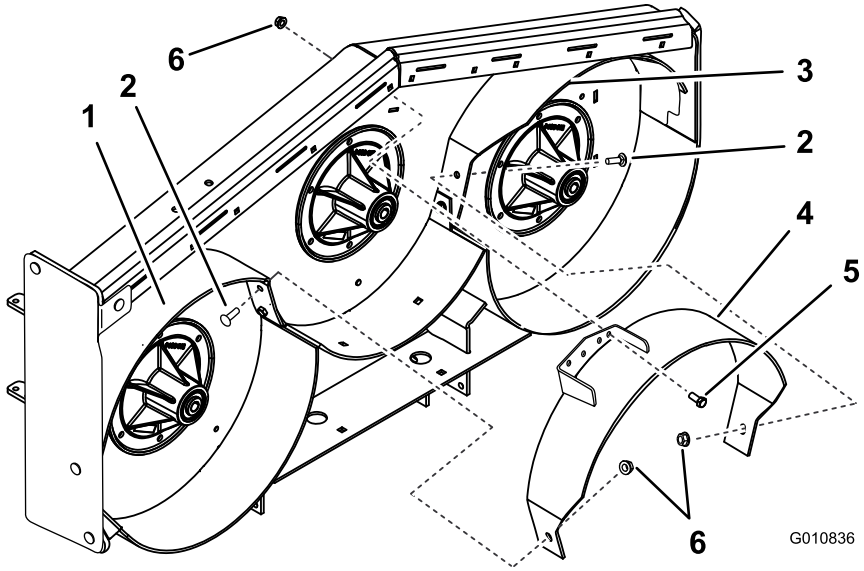

Figure 14

GrandStand mower deck shown

1. Right baffle
2. Carriage bolt (3/8 x 1 inch)
3. Left baffle
4. Center baffle
5. Bolt (3/8 x 1 inch)
6. Flange nut (small flange) (3/8 inch)

9

Installing the New Blades

Parts needed for this procedure:

3	Recycler blades

Procedure

⚠ WARNING

A blade is sharp. Contact with sharp blade can cause serious personal injury.

Wear gloves or wrap sharp edges of the blade with a rag.

Important: The sail part of the blade (i.e., the turned up section) must face the inside of the mower (Figure 15).

1. Install the new blades to the spindles with washers and blade bolts that were previously removed (Figure 15).
2. Tighten the blade bolt to 75-80 ft-lb (101-108 N-m).

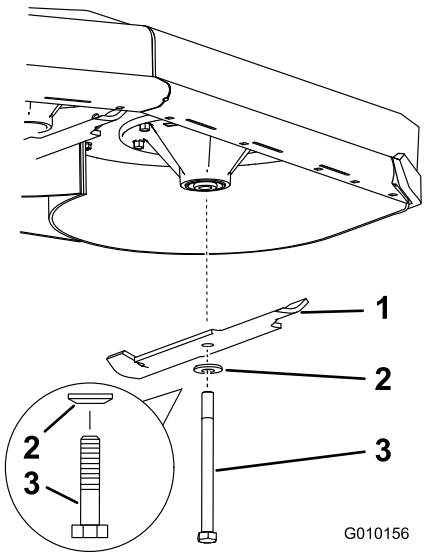

Figure 15

1. Blade
2. Curved washer
3. Blade bolt

10

Tightening all Fasteners

No Parts Required

Procedure

1. Tighten all nuts and bolts for the baffles. Refer to Installing the Baffles sections.
2. Rotate the blades and ensure there is clearance between the blades and the baffles. If there is interference, loosen the baffle and reposition it.
3. For GrandStand mowers, lower the machine, remove the plastic from the hydraulic tank, and connect the battery.
4. For GrandStand mowers, place the battery onto the machine.
5. Secure the battery with the hold down plate, j-bolts, and locknuts.
6. First, install the positive (red) battery cable to positive (+) battery terminal with a nut, washer and bolt. Slide the rubber cover over the post.
7. Then install the negative battery cable and ground wire to the negative (-) battery terminal with a nut, washer and bolt. Slide the rubber cover over the post. 12

Operation

Selecting the Proper Height-of-Cut

Remove approximately one inch or no more than 1/3 of the grass blade when cutting. In exceptionally lush and dense grass you may need to raise the height-of-cut setting or convert to side discharge or bagging operations.

Mowing in Extreme Conditions

Air is required to cut and recut grass clippings in the mower housing, so do not set the height-of-cut too low or totally surround the housing by uncut grass. Always try to have one side of the mower housing free from uncut grass, allowing air to be drawn into the housing. When making an initial cut through the center of an uncut area, operate the machine slower and back up if the mower starts to clog.

Mowing at Proper Intervals

Under most normal conditions you will need to mow every 4–5 days. However, grass grows at different rates at different times. Thus, in order to maintain the same height-of-cut, which is a good practice, you'll need to cut more frequently in

early spring; as the grass growth rate slows in mid summer, cut only every 8–10 days. If you are unable to mow for an extended period due to weather conditions or other reasons, convert to side discharge or bagging options or mow first with the height-of-cut at a high level; then mow again 2–3 days later with a lower height setting.

Mowing with Sharp Blades

A sharp blade cuts cleanly and without tearing or shredding the grass. A dull blade will tear and shred the grass. Tearing and shredding causes the grass to turn brown at the edges which impairs growth and increases susceptibility to disease.

After Operating

To ensure optimum performance, clean the underside of the mower housing after each use. If residue is allowed to build up in the mower housing, cutting performance will decrease.