Form No. 3375-181 Rev A

Adapter Kit

32-inch Cutting Unit for Reelmaster® 7000-D Traction Unit

Model No. 125-1667

Installation Instructions

1

Replacing the Front Cutting Unit Hose Assemblies

Parts needed for this procedure:

4	Hose assembly (125-1653)
2	Hose assembly (125-1654)
1	Hose assembly (125-1655)
1	Hose assembly (98-7407)
1	Hose assembly (125-1656)

Procedure

⚠ WARNING

Hydraulic fluid escaping under pressure can penetrate skin and cause injury.

- **Make sure all hydraulic fluid hoses and lines are in good condition and all hydraulic connections and fittings are tight before applying pressure to the hydraulic system.**
- **Keep your body and hands away from pin hole leaks or nozzles that eject high pressure hydraulic fluid.**
- **Use cardboard or paper to find hydraulic leaks.**
- **Safely relieve all pressure in the hydraulic system before performing any work on the hydraulic system.**
- **Get immediate medical help if fluid is injected into skin.**

1. Park the machine on a level surface, engage the parking brake, lower the cutting units and stop the engine. Remove the key from the ignition switch.
2. Remove and replace the front cutting unit hoses. The part number of each new hose is shown in Figure 1.

Note: When removing the old hoses, remember where they were secured and how they were routed through the components in the machine.

Important: Before installing any hydraulic hoses, make sure the correct O-rings are in position and lubricated with hydraulic oil.

Note: When properly installed, the line created by the writing on the hose will not twist around the hose but draw a straight line from fitting to fitting.

© 2012—The Toro® Company
8111 Lyndale Avenue South
Bloomington, MN 55420

Register at www.Toro.com.

CE

Original Instructions (EN)
Printed in the USA
All Rights Reserved

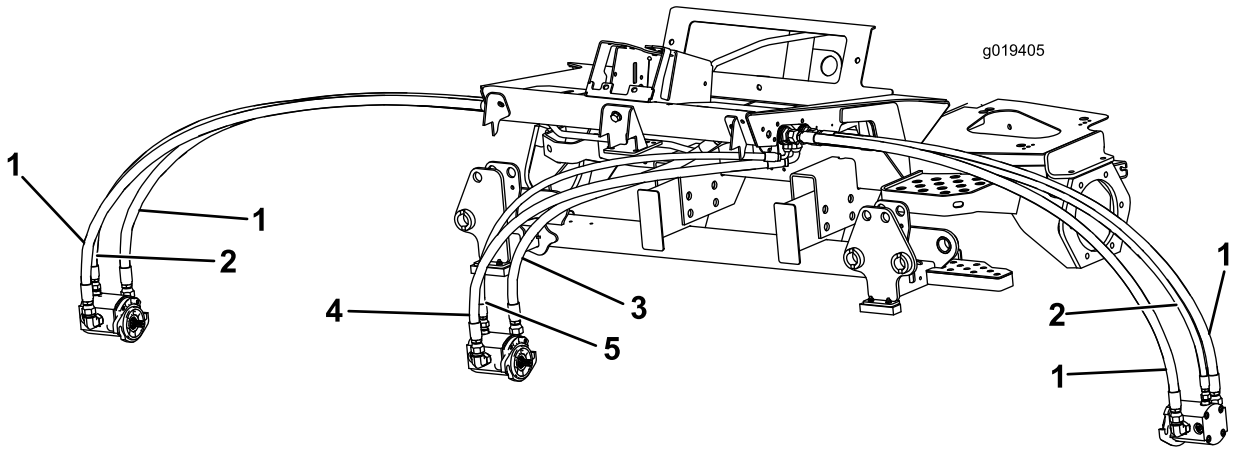

Figure 1

1. Hose- 125-1653
2. Hose -125-1654
3. Hose -125-1655
4. Hose - 98-7407
5. Hose -125-1656

2

Replacing the Roller Support Assembly

Parts needed for this procedure:

1	Roller Support Assembly

Procedure

1. Disconnect the head light wire connectors from the traction unit wire harness (Figure 2).

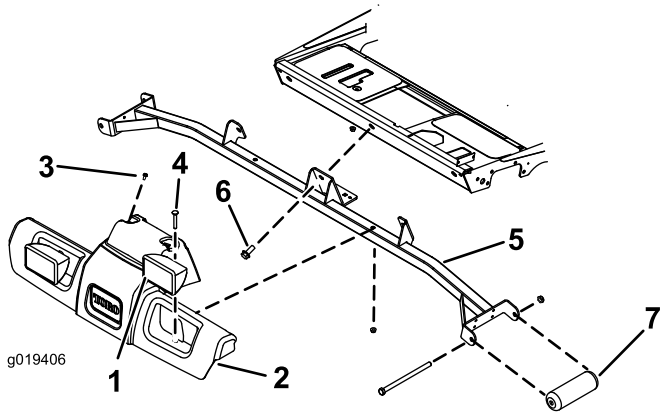

Figure 2

1. Head light (2)
2. Platform shroud
3. Screw (2)
4. Carriage bolt (2)
5. Support assembly
6. Screw (3)
7. Roller (2)

2. Remove the (2) screws securing the top of the platform shroud to the traction unit (Figure 2). Retain the screws.
3. Remove the (2) carriage bolts and nuts securing the head lights and the platform shroud to the support assembly (Figure 2). Retain the bolts and nuts.
4. Remove the platform shroud from the support assembly (Figure 2).
5. Remove the (3) screws securing the support assembly to the traction unit frame (Figure 2). Retain the screws for reassembly.
6. Remove the screws and nuts securing the front rollers to the support assembly (Figure 2). Retrain the screws, nuts and rollers but discard the support assembly.
7. Install the existing rollers to the channels of the new support assembly with the screws and nuts, previously removed, as follows:
   - If using 27 inch cutting units, install the rollers in the upper mounting holes of support assembly channels (Figure 3).
   - If using 32 inch cutting units, install the rollers in the lower mounting holes of support assembly channels (Figure 3).

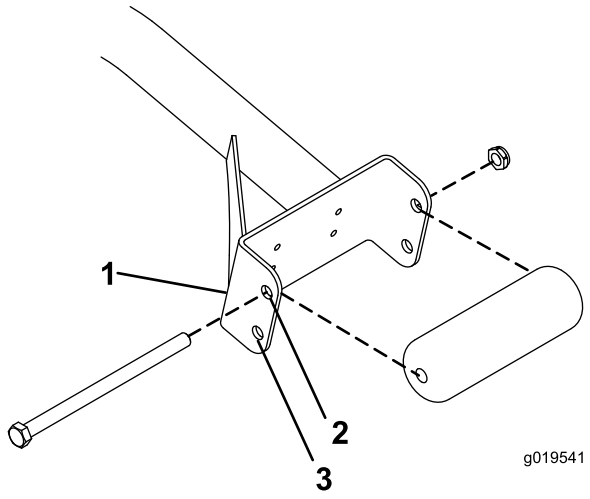

Figure 3

1. Support assembly channel
2. Use this hole for 27 inch cutting units
3. Use this hole for 32 inch cutting units

8. Mount the support assembly to the traction unit frame with the (3) screws, previously removed (Figure 2).
9. Position the platform shroud and head light assembly onto the support assembly and traction unit aligning the mounting holes (Figure 2).
10. Mount the platform shroud and head lights to the support assembly with the bolts and nuts previously removed (Figure 2).
11. Mount the top of the platform shroud to the traction unit with the screws previously removed (Figure 2).
12. Connect the head light wire connectors to the traction unit wire harness.

3

Installing the Bumpers

Parts needed for this procedure:

2	Bumper Bracket
2	Bumper Pad
4	Screw, 1/4 x 1 inch
4	Nut, 1/4 inch

Procedure

Note: The bumpers are not required if 27 inch cutting units or 32 inch cutting units without roller brush kits are mounted on the machine.

1. Position a bumper bracket under one of the carrier frame plates so the front edge of the bracket is 1.06 inches from the plate and centered from side to side on the plate (Figure 4). Make sure the holes are positioned to the front.

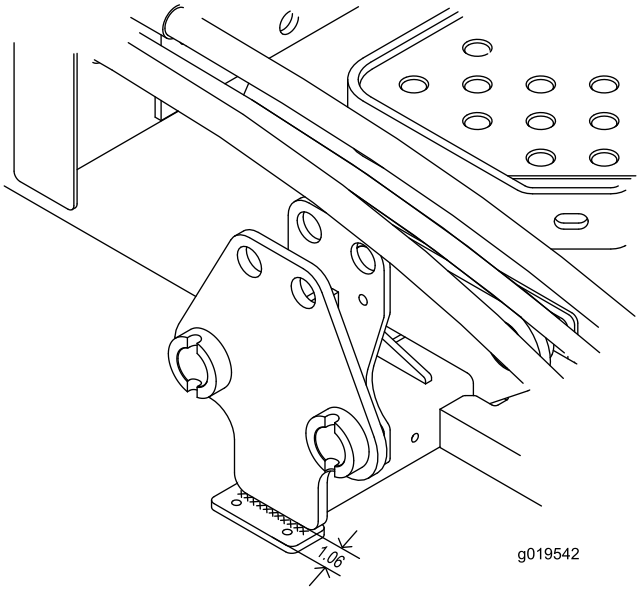

Figure 4

1. Bumper bracket
2. Carrier frame plate

2. Secure the bumper bracket to the carrier frame plate with a 1/4 inch by 2-1/2 inch fillet weld (Figure 4).
3. Install a bumper to the underside of the bracket with (2) 1/4 inch screws and nuts (Figure 5).

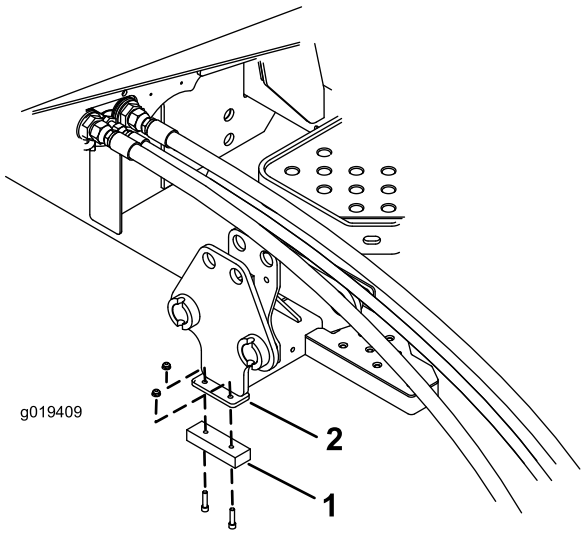

Figure 5

1. Bumper
2. Bumper bracket

4. Repeat the procedure on the other carrier frame plate.



Count on it.