Form No. 3375-251 Rev A

TimeMaster 76cm Lawn Mower

Model No. 20975—Serial No. 313000001 and Up

Model No. 20977—Serial No. 313000001 and Up

Operator's Manual

Introduction

This rotary-blade, walk-behind lawn mower is intended to be used by residential homeowners. It is designed primarily for cutting grass on well-maintained lawns on residential properties. It is not designed for cutting brush or for agricultural uses.

Read this information carefully to learn how to operate and maintain your machine properly and to avoid injury and equipment damage. You are responsible for operating the machine properly and safely.

You may contact Toro directly at www.Toro.com for product and accessory information, help finding a dealer, or to register your product.

Whenever you need service, genuine Toro parts, or additional information, contact an Authorized Service Dealer or Toro Customer Service and have the model and serial numbers of your machine ready. Figure 1 identifies the location of the model and serial numbers on the product. Write the numbers in the space provided.

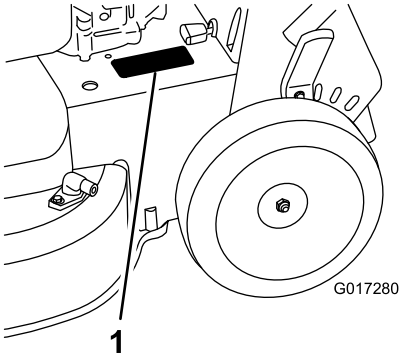

Figure 1

1. Model and serial number plate

Model No. _____

Serial No. _____

This manual identifies potential hazards and has safety messages identified by the safety alert symbol (Figure 2), which signals a hazard that may cause serious injury or death if you do not follow the recommended precautions.



Figure 2

1. Safety alert symbol

This manual uses 2 words to highlight information. **Important** calls attention to special mechanical information and **Note** emphasizes general information worthy of special attention.

This product complies with all relevant European directives. For details, see the separate product-specific Declaration of Conformity (DOC) sheet.

For models with stated engine horsepower, the gross horsepower of the engine was laboratory rated by the engine manufacturer in accordance with SAE J1940. As configured to meet safety, emission, and operating requirements, the actual engine horsepower on this class of lawn mower will be significantly lower.

Do not tamper with the engine controls or alter the governor speed; doing so may create an unsafe condition resulting in personal injury.

Contents

Introduction 1
Safety 2
General Lawn Mower Safety 2
Sound Pressure 3
Sound Power 3
Hand/Arm Vibration 3
Safety and Instructional Decals 4
Setup 5
1 Assembling the Handle 5
2 Installing the Blade-control Bar 5
3 Filling the Engine with Oil 6
4 Charging the Battery 6
Product Overview 7
Specifications 8
Operation 8
Filling the Fuel Tank 8
Checking the Engine Oil Level 9
Adjusting the Cutting Height 9
Adjusting the Handle Height 10
Starting the Engine 10
Using the Self-propel Drive 11

© 2012—The Toro® Company
8111 Lyndale Avenue South
Bloomington, MN 55420

Register at www.Toro.com.

CE

Original Instructions (EN)
Printed in the USA
All Rights Reserved

3375-251 A

Stopping the Engine 11
Engaging the Blade.....12
Disengaging the Blade.....12
Checking the Blade-stop System Operation 12
Recycling the Clippings 13
Bagging the Clippings 13
Side-discharging the Clippings.....14
Operating Tips 15
Maintenance 16
Recommended Maintenance Schedule(s) 16
Preparing for Maintenance.....16
Servicing the Air Filter 17
Changing the Engine Oil 17
Charging the Battery 18
Replacing the Fuse.....19
Replacing the Battery 19
Adjusting the Self-propel Drive Cable.....20
Servicing the Blade-drive System 20
Servicing the Cutting Blades.....21
Washing Underneath the Machine.....23
Storage 24
General Information.....24
Preparing the Fuel System 24
Preparing the Engine 25
Removing the Machine from Storage.....25

Safety

Improperly using or maintaining this mower can result in injury. To reduce the potential for injury, comply with these safety instructions.

Toro designed and tested this machine for reasonably safe service; however, failure to comply with the following instructions may result in personal injury.

To ensure maximum safety, best performance, and to gain knowledge of the product, it is essential that you and any other operator of the mower read and understand the contents of this manual before the engine is ever started. Pay particular attention to the safety alert symbol (Figure 2), which means Caution, Warning, or Danger—"personal safety instruction." Read and understand the instruction because it has to do with safety. Failure to comply with the instruction may result in personal injury.

General Lawn Mower Safety

The following instructions have been adapted from EN 836.

This cutting machine is capable of amputating hands and feet and of throwing objects. Failure to observe the following safety instructions could result in serious injury or death.

Training

- Read the instructions carefully. Be familiar with the controls and the proper use of the equipment.
- Never allow children or people unfamiliar with these instructions to use the mower. Local regulations can restrict the age of the operator.
- Keep in mind that the operator or user is responsible for accidents or hazards occurring to other people or their property.
- Understand explanations for all pictograms used on the mower or in the instructions.

Gasoline

WARNING! Gasoline is highly flammable. Take the following precautions.

- Store fuel in containers specifically designed for this purpose.
- Refuel outdoors only and do not smoke while refueling.
- Add fuel before starting the engine. Never remove the cap of the fuel tank or add gasoline while the engine is running or when the engine is hot.
- If gasoline is spilled, do not attempt to start the engine but move the mower away from the area of spillage and avoid creating any source of ignition until gasoline vapors have dissipated.
- Replace all fuel tank and container caps securely.

Preparation

- While mowing, always wear substantial footwear and long trousers. Do not operate the equipment when barefoot or wearing open sandals.
- Thoroughly inspect the area where the equipment is to be used and remove all stones, sticks, wires, bones, and other foreign objects.
- Before using, always visually inspect to see that guards, and safety devices, such as deflectors and/or grass catchers, are in place and working correctly.
- Before using, always visually inspect to see that the blades, blade bolts, and cutter assembly are not worn or damaged. Replace worn or damaged blades and bolts in sets to preserve balance.

Starting

- Do not tilt the mower when starting the engine unless the mower has to be tilted for starting. In this case, do not tilt it more than absolutely necessary, and lift only the part which is away from the operator.
- Start the engine carefully according to instructions and with feet well away from the blade(s) and not in front of the discharge chute.

Operation

- Never mow while people, especially children, or pets are nearby.
- Mow only in daylight or in good artificial light.
- Stay alert for holes in the terrain and other hidden hazards.

- Do not put hands or feet near or under rotating parts. Keep clear of the discharge opening at all times.
- Never pick up or carry a lawn mower while the engine is running.
- Use extreme caution when reversing or pulling a pedestrian-controlled lawn mower towards you.
- Walk, never run.
- Slopes:
  - Do not mow excessively steep slopes.
  - Exercise extreme caution when on slopes.
  - Mow across the face of slopes, never up and down, and exercise extreme caution when changing direction on slopes.
  - Always be sure of your footing on slopes.
- Reduce speed on slopes and in sharp turns to prevent overturning or loss of control.
- Stop the blade if the lawn mower has to be tilted for transportation when crossing surfaces other than grass and when transporting the lawn mower to and from the area to be mowed.
- Do not operate the engine in a confined space where dangerous carbon monoxide fumes can collect.
- Stop the engine
  - whenever you leave the lawn mower.
  - before refueling.
  - before removing the grass catcher.
  - before making height adjustment unless adjustment can be made from the operator's position.
- Stop the engine and disconnect the spark-plug wire
  - before clearing blockages or unclogging chute.
  - before checking, cleaning or working on the lawn mower.
  - after striking a foreign object, inspect the lawn mower for damage and make repairs before starting and operating the lawn mower.
  - if lawn mower starts to vibrate abnormally (check immediately).
- Lightning can cause severe injury or death. If you see lightning or hear thunder in the area, do not operate the machine; seek shelter.
- Watch out for traffic when crossing or near roadways.

Maintenance and Storage

- Keep all nuts, bolts, and screws tight to be sure that the equipment is in safe working condition.
- Do not use pressure-cleaning equipment on machine.
- Never store the equipment with gasoline in the tank and inside a building where fumes can reach an open flame or spark.
- Allow the engine to cool before storing in any enclosure.
- To reduce the fire hazard, keep the engine, silencer, battery compartment and gasoline storage area free of grass, leaves, or excessive grease.
- Check grass catcher components and the discharge guard frequently, and replace with manufacturer's recommended parts, when necessary.
- Replace worn or damaged parts for safety.
- Replace faulty silencers.
- If the fuel tank has to be drained, do this outdoors.
- Do not change the engine governor settings or overspeed the engine. Operating an engine at excessive speed can increase the hazard of personal injury.
- Be careful during adjustment of the lawn mower to prevent entrapment of the fingers between moving blades and fixed parts of the lawn mower.
- **To ensure the best performance and safety, purchase only genuine Toro replacement parts and accessories. Do not use *will fit* parts and accessories; they may cause a safety hazard.**

Sound Pressure

This unit has a sound pressure level at the operator's ear of 89 dBA, which includes an Uncertainty Value (K) of 1 dBA.

The sound pressure level was determined according to the procedures outlined in EN 836.

Sound Power

This unit has a guaranteed sound power level of 100 dBA, which includes an Uncertainty Value (K) of 1 dBA.

The sound power level was determined according to the procedures outlined in ISO 11094.

Hand/Arm Vibration

Measured vibration level for right hand = 7.5 m/s

Measured vibration level for left hand = 5.5 m/s

Uncertainty Value (K) = 3.0 m/s2

Measured values were determined according to the procedures outlined in EN 836.

Safety and Instructional Decals

Important: **Safety and instruction decals are located near areas of potential danger. Replace damaged decals.**

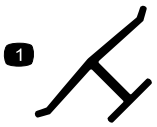

Manufacturer's Mark

1. Indicates the blade is identified as a part from the original machine manufacturer.

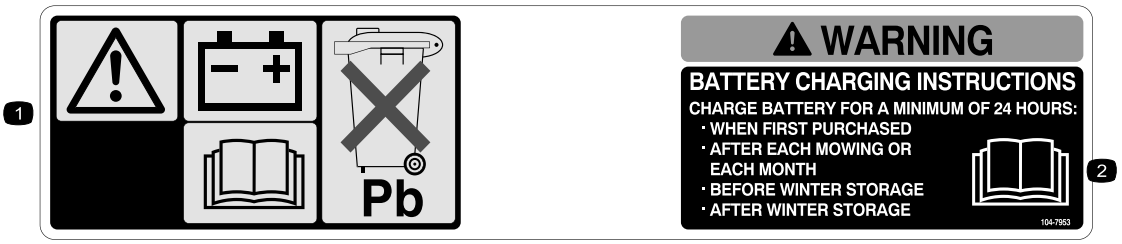

104-7953

Electric-start model only

1. Warning—read the *Operator's Manual* for information on charging the battery; contains lead; do not discard.
2. Read the *Operator's Manual*.

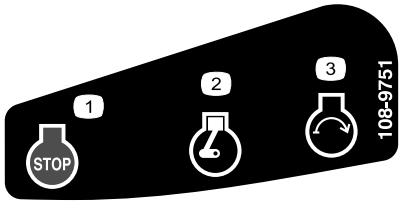

108-9751

Electric-start model only

1. Engine—stop
2. Engine—run
3. Engine—start

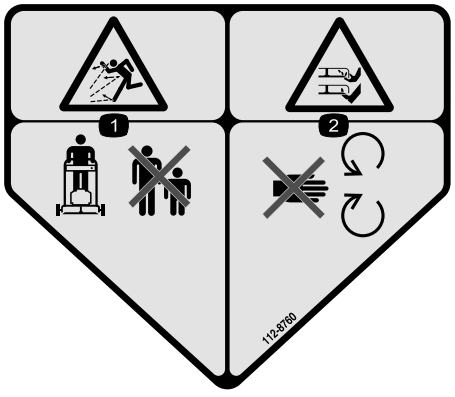

112-8760

1. Thrown object hazard—keep bystanders a safe distance from the machine.
2. Cutting/dismemberment of hand or foot—stay away from moving parts.



114-7982

1. Warning—read the *Operator's Manual*.
2. Thrown object hazard—keep bystanders a safe distance from the machine.
3. Cutting/dismemberment hazard of hand or foot, mower blade—disconnect the spark-plug wire and read the instructions before servicing or performing maintenance.
4. Cutting/dismemberment hazard of hand or foot, mower blade—stay away from moving parts.
5. Cutting/dismemberment hazard of hand or foot, mower blade—do not operate up and down slopes; operate side to side on slopes; stop the engine before leaving the operating position; and look behind you when backing up.

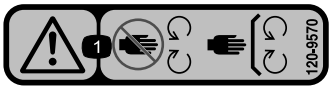

120-9570

1. Warning—stay away from moving parts, keep all guards and shields in place.

Setup

Important: **Remove and discard the protective plastic sheet that covers the engine.**

1

Assembling the Handle

No Parts Required

Procedure

⚠ WARNING

Assembling and unfolding the handle improperly can damage the cables, causing an unsafe operating condition.

- **Do not damage the cables when unfolding the handle.**
- **If a cable is damaged, contact an Authorized Service Dealer.**

1. Rotate the upper handle so that it nests together with the lower handle (Figure 3), and tighten both knobs on the handle to lock the upper handle in place (Figure 4).

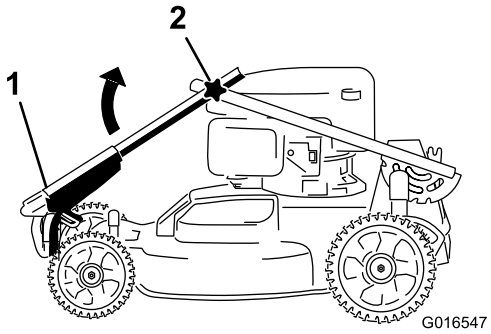

Figure 3

1. Upper handle
2. Knob (2)

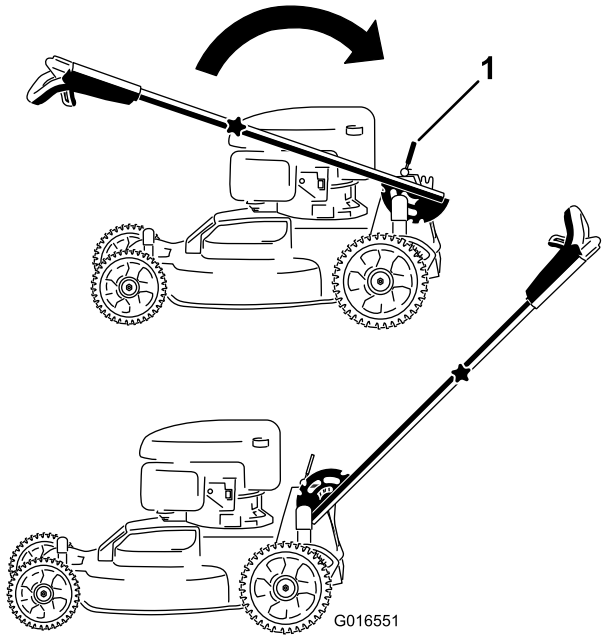

Figure 4

1. Handle-lock lever

2. Release the handle-lock lever (Figure 4).
3. Pull the handle rearward and lock it into position (Figure 4).

2

Installing the Blade-control Bar

No Parts Required

Procedure

Install the blade-control bar into the upper handle (Figure 5).

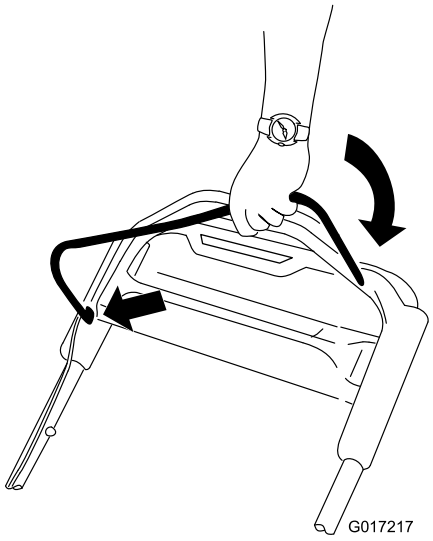

Figure 5

3

Filling the Engine with Oil

Parts needed for this procedure:

0.59 l	Engine oil

Procedure

Important: This machine *does not* come with oil in the engine. Before starting the engine, fill the engine with oil.

1. Move the machine to a level surface.
2. Remove the dipstick (Figure 6) and pour about 3/4 of the crankcase capacity of oil into the oil-fill tube.

   Note: Max. fill: 0.59 l (20 oz.), type: SAE 30 detergent oil with an API service classification of SF, SG, SH, SJ, SL, or higher.

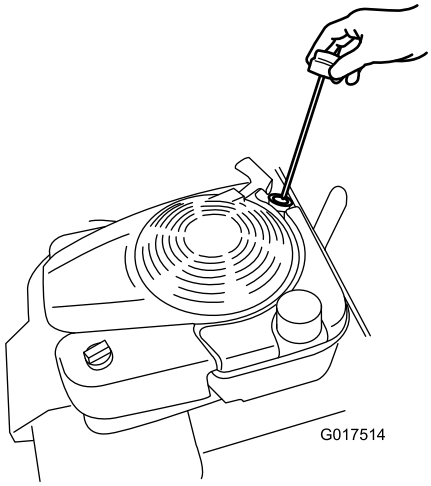

Figure 6

3. Wipe off the dipstick end with a clean cloth.
4. Insert the dipstick into the oil-fill tube, and screw it in until it stops.
5. Remove the dipstick and read the oil level on the dipstick; refer to Figure 7.

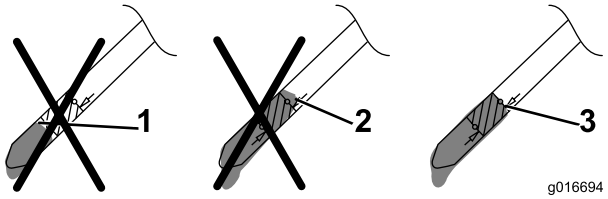

Figure 7

1. The oil level is too low; add oil to the crankcase.
2. The oil level is too high; remove oil from the crankcase.
3. The oil level is correct.

   - If the oil level is too low, add a small amount of oil **slowly** to the oil-fill tube, and then repeat steps 3 through 5 until the oil level is correct as shown in Figure 7.
   - If the oil level is too high, drain the excess oil until you obtain the correct oil level on the dipstick. To drain the excess oil, refer to Changing the Engine Oil (page 17).

     Important: If the oil level in the crankcase is too low or too high and you run the engine, you may damage the engine.

6. Install the dipstick securely by hand.

4

Charging the Battery

No Parts Required

Procedure

Electric-start model only

Refer to Charging the Battery (page 18).

Product Overview

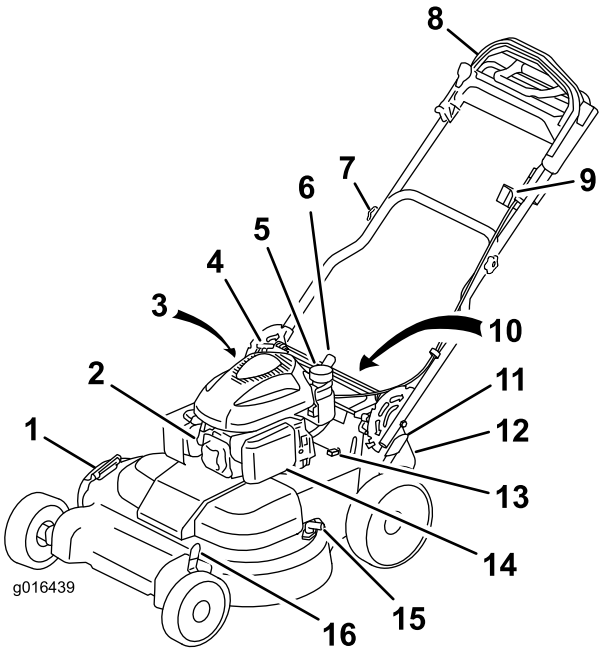

Figure 8

1. Side-discharge deflector
2. Spark plug
3. Dipstick/oil-fill tube (not shown)
4. Recoil-start handle
5. Fuel-tank cap
6. Handle-lock lever
7. Handle knob (2)
8. Upper handle
9. Ignition switch
10. Battery (not shown; electric-start model only)
11. Rear cutting-height lever
12. Rear-discharge deflector
13. Fuse
14. Air filter
15. Washout port
16. Front cutting-height lever

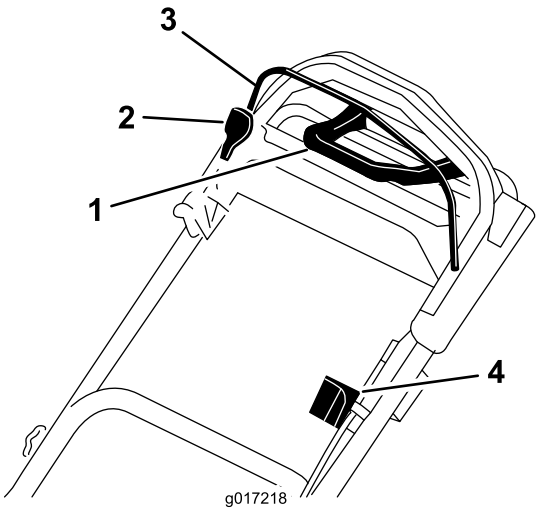

Figure 9

Upper handle

1. Traction-assist handle
2. Blade-control bar lock
3. Blade-control bar
4. Ignition switch

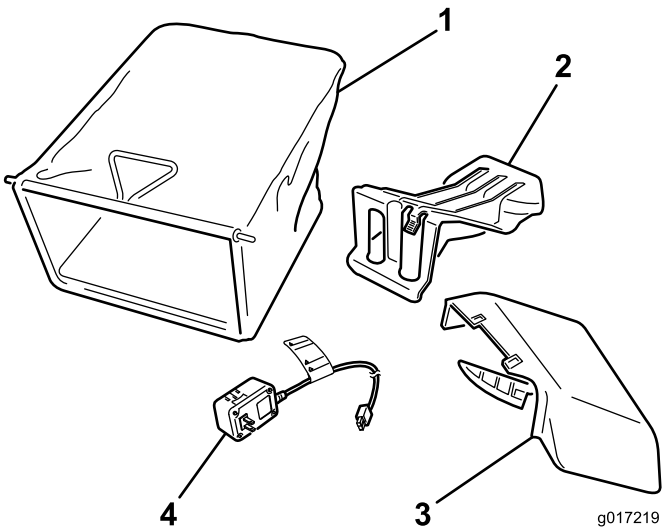

Figure 10

1. Grass bag
2. Rear-discharge plug (installed)
3. Side-discharge chute
4. Battery charger (electric-start model only)

Specifications

Model	Weight	Length	Width	Height
20975	62 kg (137 lb)	163 cm (64 in)	81 cm (32 in)	112 cm (44 in)
20977	65 kg (143 lb)	163 cm (64 in)	81 cm (32 in)	112 cm (44 in)

Operation

Filling the Fuel Tank

⚠ DANGER

Gasoline is extremely flammable and explosive. A fire or explosion from gasoline can burn you and others.

- **To prevent a static charge from igniting the gasoline, place the container and/or mower directly on the ground before filling, not in a vehicle or on an object.**
- **Fill the tank outdoors when the engine is cold. Wipe up spills.**
- **Do not handle gasoline when smoking or around an open flame or sparks.**
- **Store gasoline in an approved fuel container, out of the reach of children.**

- For best results, use only clean, fresh, unleaded gasoline with an octane rating of 87 or higher ((R+M)/2 rating method).
- Oxygenated fuel with up to 10% ethanol or 15% MTBE by volume is acceptable.
- **Do not** use ethanol blends of gasoline, such as E15 or E85, with more than 10% ethanol by volume. Performance problems and/or engine damage may result, which may not be covered under warranty.
- **Do not** use gasoline containing methanol.
- **Do not** store fuel either in the fuel tank or in fuel containers over the winter unless fuel stabilizer has been added to the fuel.
- **Do not** add oil to gasoline.

Important: To reduce starting problems, add a fuel stabilizer to the fuel all season, mixing it with gasoline less than 30 days old.

1. Clean around the fuel tank cap, and remove the cap from the tank (Figure 11).

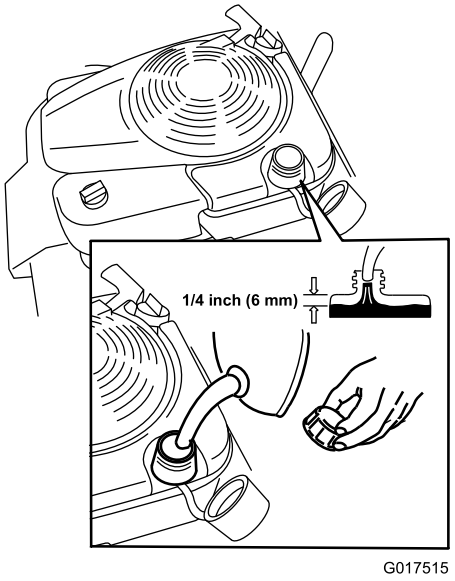

Figure 11

2. Fill the fuel tank, leaving at least 6 mm (1/4 inch) from the bottom of the neck empty to allow the gasoline room to expand (Figure 11).
3. Install the fuel tank cap and tighten it securely by hand.

Checking the Engine Oil Level

Service Interval: Before each use or daily

Max. fill: 0.59 l (20 oz.), type: SAE 30 detergent oil with an API service classification of SF, SG, SH, SJ, SL, or higher.

1. Move the machine to a level surface.
2. Remove the dipstick (Figure 12).

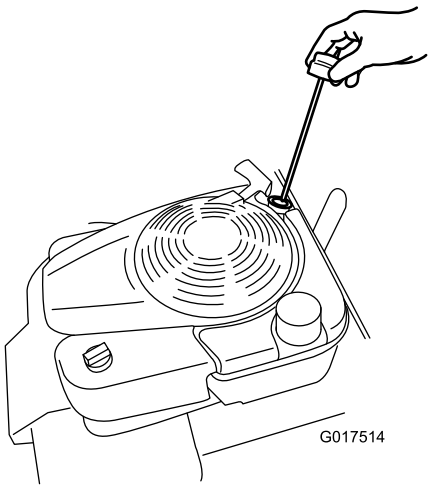

Figure 12

3. Wipe off the dipstick end with a clean cloth.
4. Insert the dipstick into the oil-fill tube and screw it in until it stops.
5. Remove the dipstick and read the oil level; refer to Figure 13.

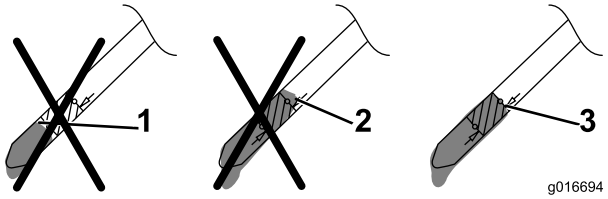

Figure 13

1. The oil level is too low; add oil to the crankcase.
2. The oil level is too high; remove oil from the crankcase.
3. The oil level is correct.

- If the oil level is too low, add a small amount of oil **slowly** to the oil-fill tube, and then repeat steps 3 through 5 until the oil level is correct as shown in Figure 7.
- If the oil level is too high, drain the excess oil until you obtain the correct oil level on the dipstick; to drain the excess oil, refer to Changing the Engine Oil (page 17).

Important: If the oil level in the crankcase is too low or too high and you run the engine, you may damage the engine.

6. Install the dipstick securely by hand.

Adjusting the Cutting Height

⚠ WARNING

Adjusting the cutting height may bring you into contact with the moving blades, causing serious injury.

- **Stop the engine and wait for all moving parts to stop.**
- **Do not put your fingers under the housing when adjusting the cutting height.**

Adjust the cutting height as desired; refer to Figure 14 and Figure 15.

Note: To raise the machine, move the front and rear cutting height levers forward; to lower the machine, move the cutting height levers rearward. Set the front and rear wheels to the same height unless special circumstances require otherwise; refer to Operating Tips (page 15).

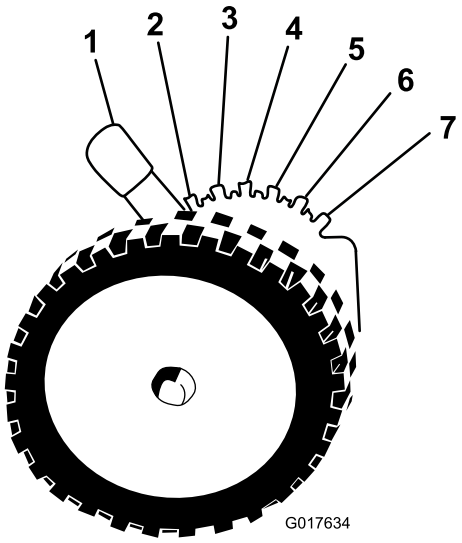

Figure 14

Front cutting-height lever

1. A = 10.8 cm (4-1/4 inches)
2. B = 9.5 cm (3-3/4 inches)
3. C = 8.3 cm (3-1/4 inches)
4. D = 7.0 cm (2-3/4 inches)
5. E = 5.7 cm (2-1/4 inches)
6. F = 4.4 cm (1-3/4 inches)
7. G = 3.2 cm (1-1/4 inch)

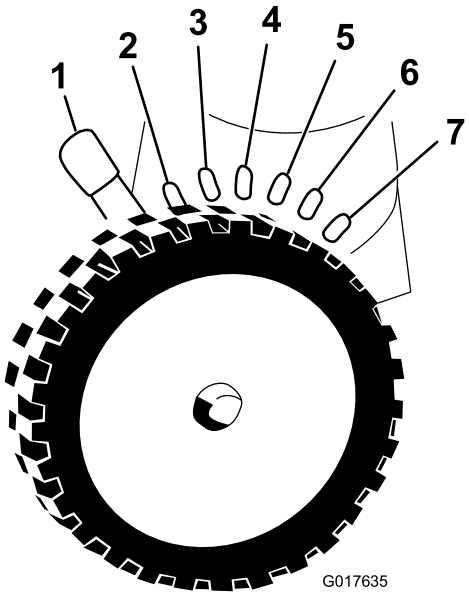

Figure 15

Rear cutting-height lever

1. A = 10.8 cm (4-1/4 inches)
2. B = 9.5 cm (3-3/4 inches)
3. C = 8.3 cm (3-1/4 inches)
4. D = 7.0 cm (2-3/4 inches)
5. E = 5.7 cm (2-1/4 inches)
6. F = 4.4 cm (1-3/4 inches)
7. G = 3.2 cm (1-1/4 inch)

Adjusting the Handle Height

You can raise or lower the handle to a position more comfortable for you.

1. Pull the handle-lock lever rearward to disengage the handle-lock pins (Figure 16).

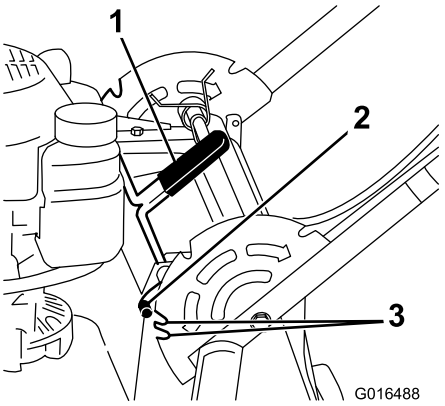

Figure 16

1. Handle-lock lever
2. Handle-lock pin (2)
3. Notches

2. Rotate the handle and align the desired notch in the handle bracket to the handle-lock pins; refer to Figure 16.
3. Release the handle-lock lever to secure the handle in place.

Starting the Engine

Standard Model

Pull the recoil handle slowly until you feel resistance, then pull it sharply. Allow the rope to return to the engine slowly.

Note: If the machine does not start after several attempts, contact an Authorized Service Dealer.

Electric-start Model

You can start the engine on an electric-start model by using either the ignition key or the recoil-start handle.

- **Ignition Key:** Turn and hold the ignition key to the Start position (Figure 17); when the engine starts, release the key.

  Important: Do not attempt to start the engine with the blade-control bar engaged; otherwise, you may blow the fuse.

  Note: Do not hold the ignition key in the Start position for longer than 5 seconds to prevent burning out the starter motor.

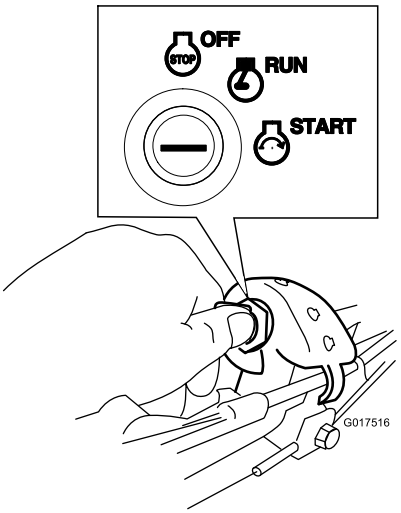

Figure 17

- **Recoil-start Handle:**
  1. Turn the ignition key to the Run position (Figure 17).
  2. Pull the recoil handle slowly to the rear until you feel resistance, then pull sharply. Allow the rope to return to the engine slowly.

Using the Self-propel Drive

To operate the self-propel drive, simply walk with your hands gripping the upper handle and your elbows at your sides, and the machine will automatically keep pace with you (Figure 18).

Note: You can self-propel the machine with the blades engaged or disengaged.

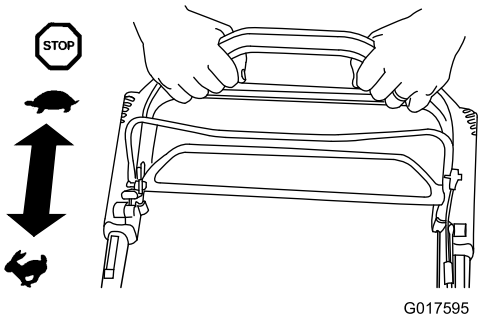

Figure 18

Note: Use the traction-assist handle in situations when you need more control than you have with the self-propel drive alone.

Stopping the Engine

Standard Model

Press the toggle switch (Figure 19) to the Stop position and hold it until the engine stops.

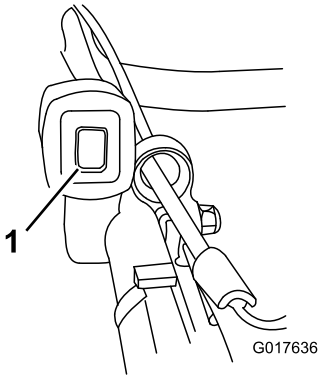

Figure 19

Electric-start Model

1. Turn the key to the Off position (Figure 20).

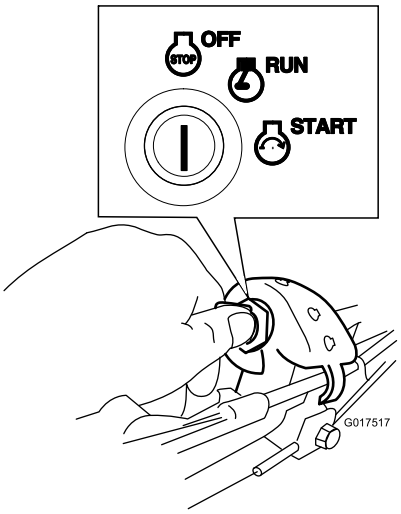

Figure 20

2. When the engine stops, remove the ignition key and take it with you when you leave the machine.

Engaging the Blade

When you start your engine, the blades do not turn. You must engage the blades to mow.

1. Pull the blade-control-bar lock back to the blade-control bar (Figure 21).

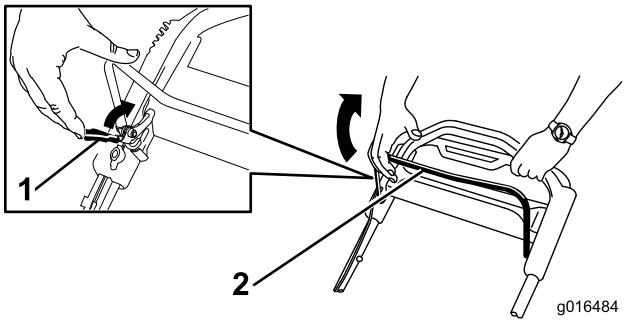

Figure 21

1. Blade-control bar lock 2. Blade-control bar

2. **Slowly** pull the blade-control bar back to the handle (Figure 21).
3. Hold the blade-control bar against the handle (Figure 22).

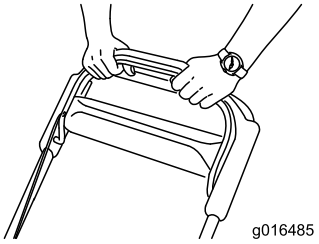

Figure 22

Disengaging the Blade

Release the blade-control bar (Figure 23).

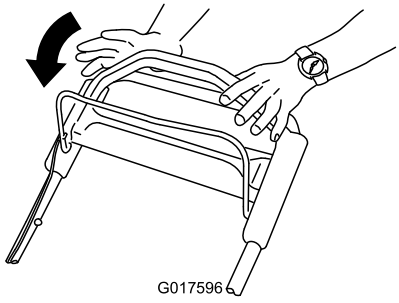

Figure 23

Important: When you release the blade-control bar, the blades should stop within 3 seconds. If they do not stop properly, stop using your machine immediately and contact an Authorized Service Dealer.

Checking the Blade-stop System Operation

Before each use, check that the blades stop within 3 seconds of releasing the blade-control bar.

Using the Grass Bag

Service Interval: Before each use or daily

You can use the grass bag to check the blade-stop system.

1. Remove the rear-discharge plug.
2. Install the empty grass bag on the machine.
3. Start the engine.
4. Engage the blades.

   Note: The bag should begin to inflate, indicating that the blades are rotating.
5. While watching the bag, release the blade-control bar.

   Note: If the bag does not deflate within 3 seconds of releasing the blade-control bar, the blade-stop system may be deteriorating and, if ignored, could result in an unsafe operating condition. Have the machine inspected and serviced by an Authorized Service Dealer.
6. Stop the engine and wait for all moving parts to stop.

Not Using the Grass Bag

1. Move the machine onto a paved surface in a non-windy area.
2. Set all 4 wheels to the 89 mm (3-1/2 inch) cutting height setting.
3. Take a half sheet of newspaper and crumple it into a ball small enough to go under the machine (about 75 mm or 3 inches in diameter).
4. Place the newspaper ball about 13 cm (5 inches) in front of the machine.
5. Start the engine.
6. Engage the blades.
7. Release the blade-control bar and begin counting out 3 seconds.
8. On the count of 3, push the machine quickly forward over the newspaper.
9. Stop the engine and wait for all moving parts to stop.
10. Go to the front of the machine and check the newspaper ball.

    Note: If the newspaper ball did not go under the machine, repeat steps 4 through 10.
11. If the newspaper is unravelled or shredded, the blades did not stop properly, which could result in an unsafe operating condition. Contact an Authorized Service Dealer.

Recycling the Clippings

This machine comes from the factory ready to recycle grass and leaf clippings back into the lawn. To prepare the machine to recycle:

- If the side-discharge chute is on the mower, remove it and lower the side-discharge deflector; refer to Removing the Side-discharge Chute (page 14).
- If the grass bag is on the machine, remove it; refer to Removing the Grass Bag (page 14).
- If the rear-discharge plug is not installed, grip it by the handle, raise the rear deflector, and insert it into the rear-discharge chute until the latch locks into place; refer to Figure 24.

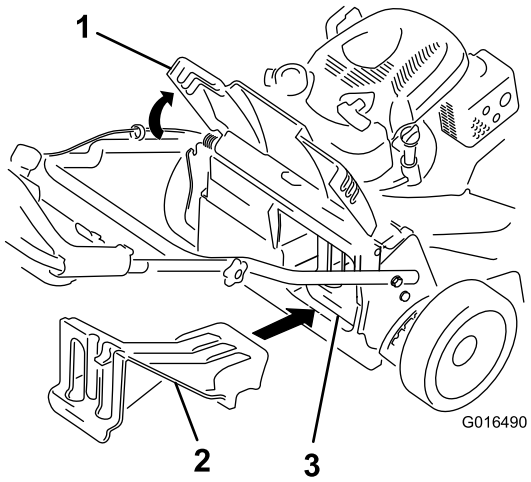

Figure 24

1. Rear deflector
2. Insert the rear-discharge plug
3. The rear-discharge plug installed

⚠ WARNING

Ensure that the rear-discharge plug is in place before you recycle the clippings. Never engage the blades without either the rear-discharge plug or the grass bag installed.

Bagging the Clippings

Use the grass bag when you want to collect grass and leaf clippings from the lawn.

⚠ WARNING

A worn grass bag could allow small stones and other similar debris to be thrown toward the operator or bystanders and result in serious personal injury or death.

Check the grass bag frequently. If it is damaged, install a new Toro replacement bag.

If the side-discharge chute is on the mower, remove it before bagging the clippings; refer to Removing the Side-discharge Chute (page 14).

⚠ WARNING

The blades are sharp; contacting the blades can result in serious personal injury.

Stop the engine and wait for all moving parts to stop before leaving the operating position.

Installing the Grass Bag

1. Raise and hold up the rear deflector (Figure 25).

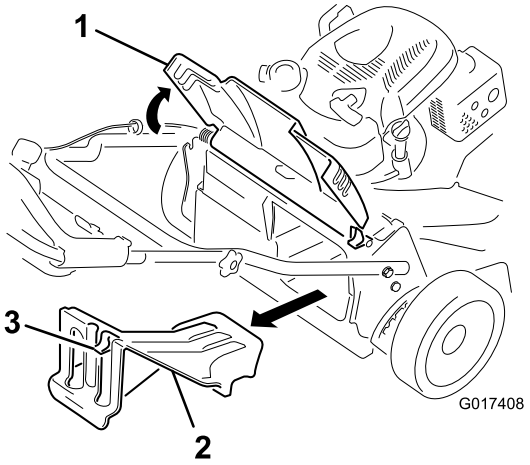

Figure 25

1. Rear deflector
2. Rear-discharge plug
3. Latch

2. Remove the rear-discharge plug by pulling down on the latch with your thumb and pulling the plug out from the machine (Figure 25).
3. Install the bag rod into the notches at the base of the handle and rock the bag back and forth to ensure that the rod is seated at the bottom of both notches; refer to Figure 26.

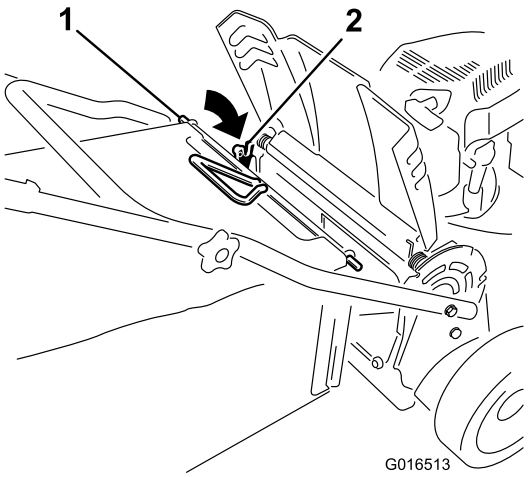

Figure 26

1. Bag rod
2. Notch (2)

4. Lower the rear deflector until it rests on the grass bag.

Removing the Grass Bag

To remove the bag, reverse the steps in Installing the Grass Bag above.

Side-discharging the Clippings

Use the side discharge for cutting very tall grass.

If the bag is on the machine, remove it and insert the rear-discharge plug; refer to Removing the Grass Bag (page 14) before side-discharging the clippings.

Important: Ensure that the rear-discharge plug is in place before you recycle the clippings (Figure 24).

⚠ WARNING

The blade is sharp; contacting the blade can result in serious personal injury.

Stop the engine and wait for all moving parts to stop before leaving the operating position.

Installing the Side-discharge Chute

With the chute in your right hand:

1. Lift open the side-discharge deflector (Figure 27).

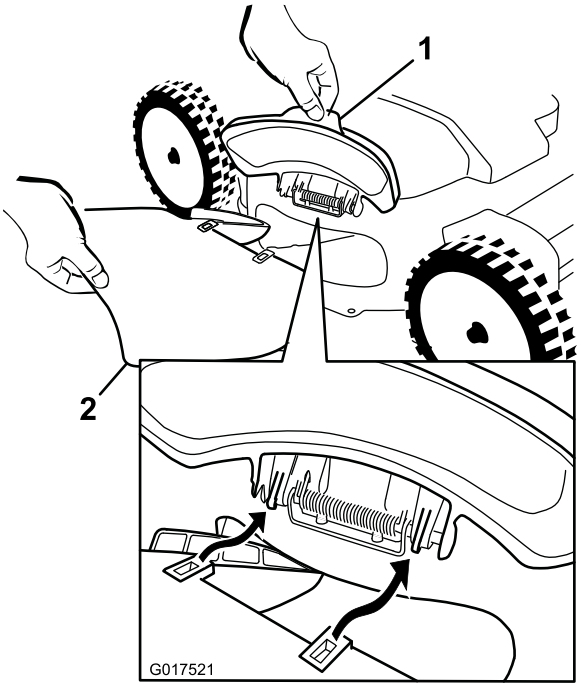

Figure 27

1. Side-discharge deflector
2. Side-discharge chute

2. Install the side-discharge chute as shown in Figure 27 and Figure 28, and close the deflector onto the chute.

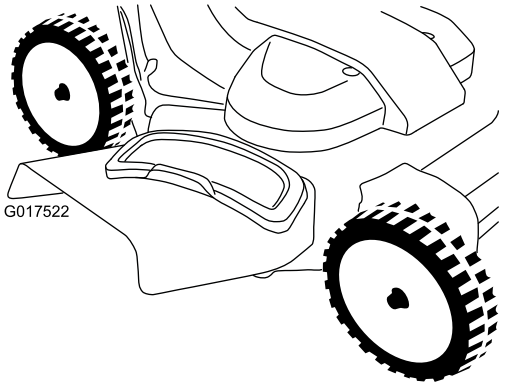

Figure 28

Removing the Side-discharge Chute

To remove the side-discharge chute, reverse the steps in Installing the Side-discharge Chute above.

Operating Tips

General Mowing Tips

- Clear the area of loose sticks, branches, stones, wire, twine, and other debris that the blades could hit.
- Avoid striking solid objects with the blades. Never deliberately mow over any object.
- If the machine strikes an object or starts to vibrate, immediately stop the engine, disconnect the wire from the spark plug, and examine the machine for damage.
- For best performance, install new Toro replacement blades for your model before the cutting season begins.
- Replace the blades when necessary with Toro replacement blades.

Cutting Grass

- Cut only about a third of the grass blade at a time. Do not cut below the 51 mm (2 inch) setting unless the grass is sparse or it is late fall when grass growth begins to slow down.
- When cutting grass over 15 cm (6 inches) tall, mow at the highest cutting height setting and walk slower; then mow again at a lower setting for the best lawn appearance. If the grass is too long, the machine may plug and cause the engine to stall.
- Alternate the mowing direction. This helps disperse the clippings over the lawn for even fertilization.
- If the finished lawn appearance is unsatisfactory, try one or more of the following:
  - Replace the blades or have them sharpened.
  - Walk at a slower pace while mowing.
  - Raise the cutting height on your machine.
  - Overlap cutting swaths instead of cutting a full swath with each pass.
  - Set the cutting height on the front wheels a notch lower than the rear wheels.
  - Cut the grass more frequently.
- Cut only dry grass or leaves. Wet grass and leaves tend to clump on the yard and can cause the machine to plug or the engine to stall.

⚠ WARNING

Mowing wet grass or leaves can lead to serious injury if you slip and contact the blade. Mow only in dry conditions.

Cutting Leaves

- After cutting a leaf-covered lawn, ensure that at least half of the lawn shows through the cut leaves. You may need to mow the leaves again.
- If there are more than 13 cm (5 inches) of leaves on the lawn, set the front cutting height 1 or 2 notches higher than the rear cutting height.
- Slow down your mowing speed if the mower does not cut the leaves finely enough.

Maintenance

Note: Determine the left and right sides of the machine from the normal operating position.

Recommended Maintenance Schedule(s)

Maintenance Service Interval	Maintenance Procedure
After the first 5 hours	• Change the engine oil.
Before each use or daily	• Check the engine oil level. • Check the blade-stop system operation. • Check the air cleaner and clean or replace it, if necessary. • Check the cutting blades. • Wash underneath the machine.
Every 25 hours	• Charge the battery (electric-start model only).
Every 50 hours	• Change the engine oil. • Service the blade-drive system.
Before storage	• Charge the battery (electric-start model only). • Empty the fuel tank before repairs as directed and before annual storage.
Yearly	• Service the air filter; replace it more frequently in dusty operating conditions. • Change the engine oil. • Replace the blades or have them sharpened (more frequently if the blade edges dull quickly). • Check the spark plug (use a Champion RC12YC, NGK BKR5SE-11, or equivalent); refer to the Engine Operator's Manual. • Refer to your Engine Operator's Manual for additional maintenance procedures.

Important: Refer to the *Engine Operator's Manual* for additional maintenance procedures.

Preparing for Maintenance

1. Stop the engine and wait for all moving parts to stop.
2. Disconnect the spark-plug wire from the spark plug (Figure 29).

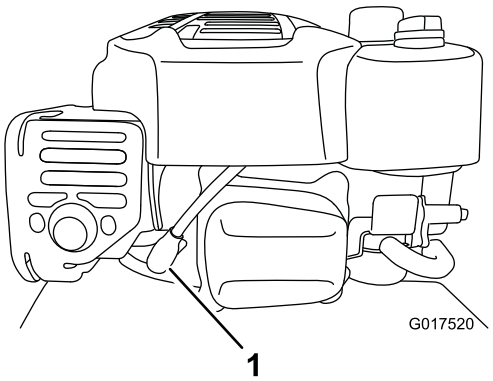

Figure 29

1. Spark-plug wire

Important: Before tipping the mower to change the oil or replace the blades, allow the fuel tank to run dry through normal usage. If you must tip the mower prior to running out of fuel, use a hand fuel pump to remove the fuel. Always tip the mower onto its side so that the air filter is up in the air.

⚠ WARNING

Tipping the machine may cause the fuel to leak. Gasoline is flammable, explosive, and can cause personal injury.

Servicing the Air Filter

Service Interval: Yearly

Before each use or daily

1. Loosen the fastener and remove the air filter cover (Figure 30).

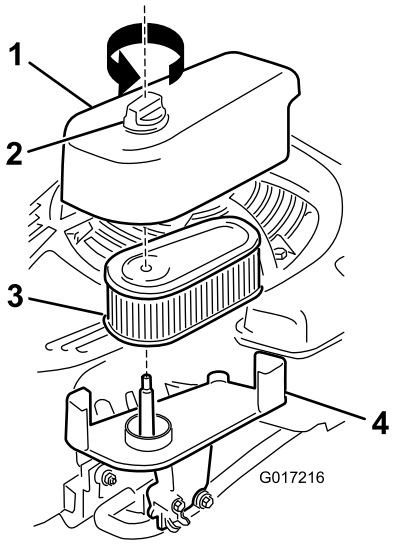

Figure 30

1. Cover
2. Fastener
3. Filter
4. Base

2. Remove and inspect the filter.
   - If the filter is damaged or is wet with oil or fuel, replace it.
   - If the filter is dirty, tap it on a hard surface several times or blow the debris outward from the interior of the filter using compressed air at less than 207 kPa (30 psi).

     Note: Do not brush or blow dirt from the outside of the filter; either forces dirt into the fibers.
3. Clean the air filter body and cover using a damp rag. **Keep dirt away from the air opening.**
4. Install the filter onto the base.
5. Install the cover and screw the fastener down securely.

Changing the Engine Oil

Service Interval: After the first 5 hours

Every 50 hours

Yearly

Max. fill: 0.59 l (20 oz.), type: SAE 30 detergent oil with an API service classification of SF, SG, SH, SJ, SL, or higher.

1. Ensure that the fuel tank contains little or no fuel so that fuel does not leak out when you tip the mower onto its side.
2. Run the engine a few minutes before changing the oil to warm it.

   Note: Warm oil flows better and carries more contaminants.
3. Disconnect the wire from the spark plug. Refer to Preparing for Maintenance (page 16).
4. Tip the mower onto its side, with the dipstick down, until the upper handle rests on the ground.
5. Set an oil-drain pan under the dipstick.
6. Remove the dipstick and drain the used oil into an oil-drain pan (Figure 31).

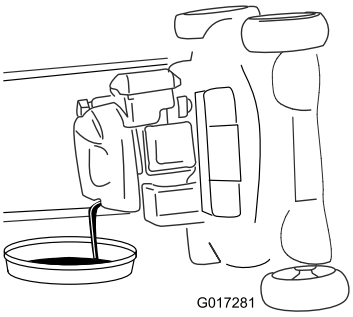

Figure 31

7. After draining the used oil, return the mower to the operating position.
8. Remove the dipstick (Figure 32) and pour about 3/4 of the crankcase capacity of oil into the oil-fill tube.

   Note: Max. fill: 0.59 l (20 oz.), type: SAE 30 detergent oil with an API service classification of SF, SG, SH, SJ, SL, or higher.

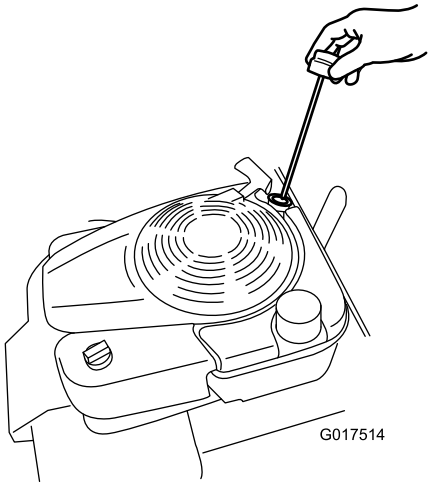

Figure 32

9. Wipe off the dipstick end with a clean cloth.
10. Insert the dipstick into the oil-fill tube, and screw it in until it stops.
11. Remove the dipstick and read the oil level on the dipstick; refer to Figure 33.

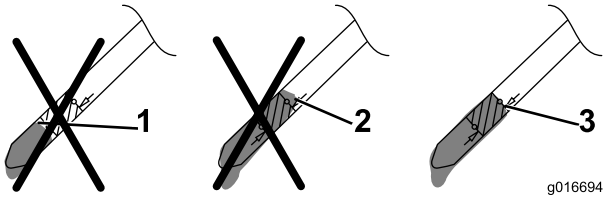

Figure 33

1. The oil level is too low; add oil to the crankcase.
2. The oil level is too high; remove oil from the crankcase.
3. The oil level is correct.

- If the oil level is too low, add a small amount of oil **slowly** to the oil-fill tube, and then repeat steps 9 through 11 until the oil level is correct as shown in Figure 33.
- If the oil level is too high, drain the excess oil until you obtain the correct oil level on the dipstick. To drain the excess oil, refer to Changing the Engine Oil (page 17).

Important: If the oil level in the crankcase is too low or too high and you run the engine, you may damage the engine.

12. Install the dipstick securely by hand.
13. Recycle the used oil.

Charging the Battery

Service Interval: Every 25 hours

Before storage

Electric-start model only

⚠ WARNING

Battery posts, terminals, and related accessories contain lead and lead compounds, chemicals known to the State of California to cause cancer and reproductive harm. *Wash hands after handling battery.*

Charge the battery for 24 hours initially, then monthly (every 25 starts) or as needed. Always use the charger in a sheltered area, and charge the battery at room temperature (about 22° C, or 70° F) whenever possible.

Note: The machine is equipped with an alternator charging system.

1. Connect the charger to the wire harness, which is located below the ignition key (Figure 34).

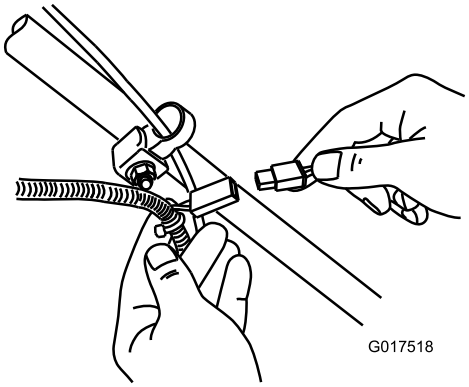

Figure 34

2. Plug the charger into a wall outlet.

Note: Your battery charger may have a 2-color LED display that indicates the following states of charging:

- A red light indicates that the charger is charging the battery.
- A green light indicates that the charger is fully charged or is disconnected from the battery.
- A flashing light that alternates between red and green indicates that the battery is nearly fully charged. This state lasts only a few minutes until the battery is fully charged.

Note: When the battery no longer holds a charge, recycle the lead-acid battery according to local codes.

Replacing the Fuse

Electric-start model only

If the battery does not charge or the engine does not turn with the electric starter, the fuse may be blown; replace it with a 40-amp plug-in type fuse.

Important: You cannot start the machine with the electric starter or charge the battery unless a working fuse is installed.

1. Open the sealed fuse holder and replace the fuse (Figure 35).

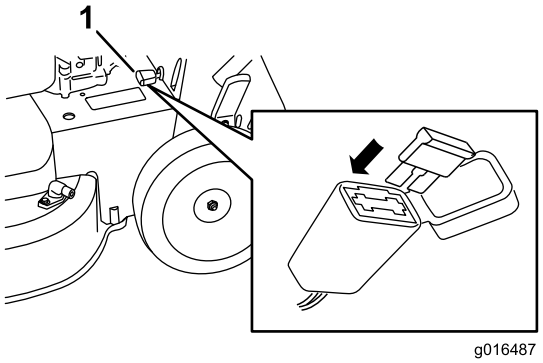

Figure 35

1. Fuse holder

2. Close the cover to the fuse holder, and ensure that it is sealed tightly.

Replacing the Battery

Electric-start model only

Removing the Old Battery

1. Contact an Authorized Parts Dealer to obtain a replacement battery.
2. Remove the belt cover; refer to step 1 of Servicing the Blade-drive System (page 20).
3. Remove the rear-discharge plug.
4. Move the handle to the vertical position.
5. Remove the 4 small bolts that hold the rear-deflector and handle-lock lever assembly in place.
6. Fold the handle all the way forward.
7. Remove the rear-deflector and handle-lock lever assembly (Figure 36).

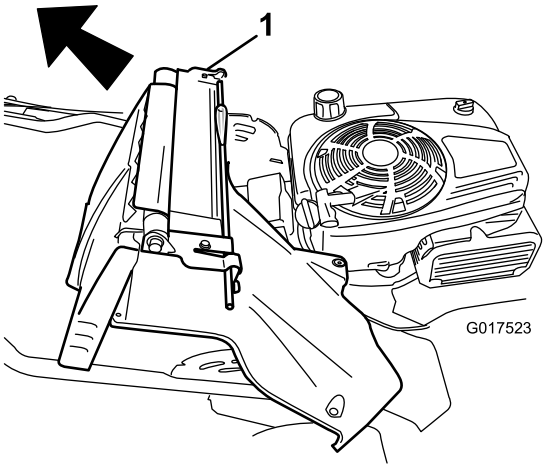

Figure 36

1. Rear-deflector and handle-lock lever assembly

8. Remove the cover from the battery.
9. Disconnect the leads from the battery.
10. Remove and battery and recycle it.

    Note: Recycle the battery according to your state and local regulations.

Installing the New Battery

1. Clean the battery-holding area on the mower housing.
2. Set the new battery in place on the mower housing.
3. Connect the leads to the new battery.

   Note: Ensure that you connect the black (negative) wire to the negative (-) terminal and the red (positive) wire to the positive (+) terminal.
4. Install the cover onto the battery.

   Note: Ensure that the cover fits properly over the wiring harness.
5. Install the rear-deflector and handle-lock lever assembly onto the machine.
6. Raise the handle to the vertical position.
7. Secure the shroud with the 4 small bolts that you removed in step 5 of Removing the Old Battery.
8. Install the rear-discharge plug.
9. Return the handle to the operating position.

Adjusting the Self-propel Drive Cable

Whenever you install a new self-propel cable, or if the self-propel drive is out of adjustment, adjust the self-propel-drive cable.

1. Loosen the cable support nut (Figure 37).

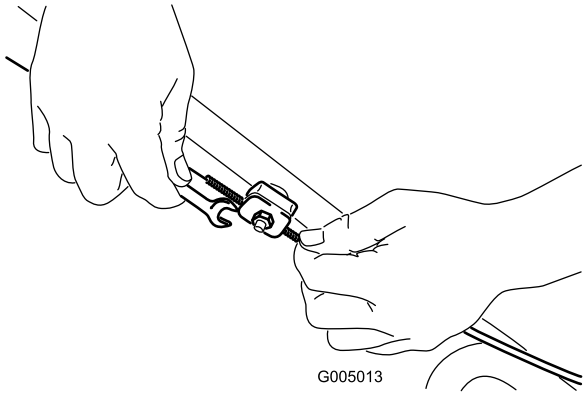

Figure 37

2. Pull down the cable jacket (toward the mower) until there is no slack in the cable (Figure 38).

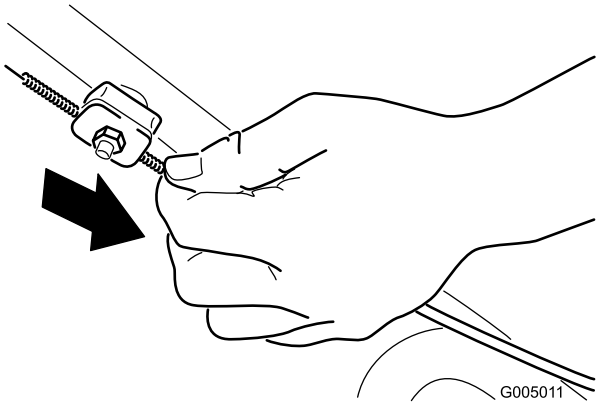

Figure 38

3. Tighten the nut on the cable support.

Servicing the Blade-drive System

Service Interval: Every 50 hours

1. Loosen the 2 screws on the belt-cover panel and remove the panel (Figure 39).

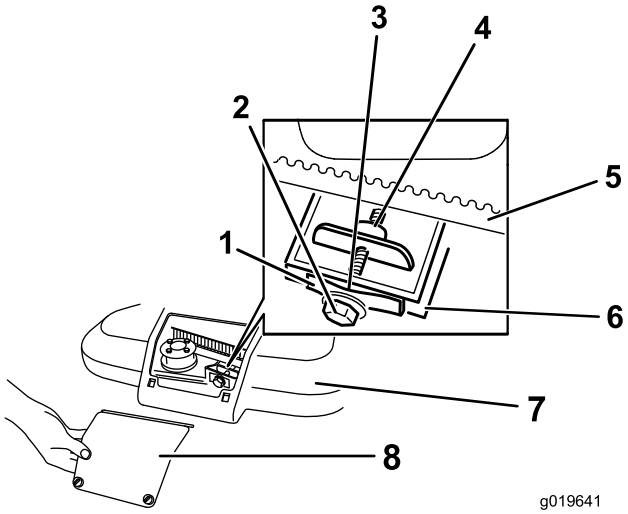

Figure 39

1. Belt-tension spring
2. Adjusting bolt
3. Gap
4. Adjusting nut
5. Blade-drive belt
6. Wall
7. Belt cover
8. Belt-cover panel

2. Brush or blow out debris from the inside of the shield and around all the parts.
3. Hold a 0.255 mm (0.010 inch) feeler gauge, a piece of paper, or a note card against the wall and slide it down behind the belt tension spring (Figure 39).

   Note: If there is a visible gap between the gauge and the spring, tighten the adjusting bolt and the nut until the paper barely slides freely in and out of the gap (Figure 39).

   Important: Do not overtighten the adjusting bolt. This could damage the blade-drive belt.
4. Install the belt-cover panel.

Servicing the Cutting Blades

Service Interval: Yearly

Important: ***You will need a torque wrench to install the blades properly.*** **If you do not have a torque wrench or are uncomfortable performing this procedure, contact an Authorized Service Dealer.**

Examine the blades for sharpness and any wear or damage whenever you run out of gasoline; refer to Inspecting the Blades (page 21). If the blade edge is dull or nicked, have it sharpened or replace it. If the blade is worn, bent, damaged or cracked, replace it immediately with a genuine Toro replacement blade.

⚠ DANGER

A worn or damaged blade can break, and a piece of the blade could be thrown toward the operator or a bystander, resulting in serious personal injury or death.

- **Inspect the blades periodically for wear or damage.**
- **Replace a worn or damaged blade.**

Note: Maintain sharp blades throughout the cutting season, because sharp blades cut cleanly without tearing or shredding the grass blades. Tearing and shredding turns grass brown at the edges, which slows growth and increases the chance of disease.

Preparing to Service the Cutting Blades

1. Lock the handle in the vertical position (Figure 40); refer to Adjusting the Handle Height (page 10).

Figure 40

1. Handle locked in the vertical position

2. Tip the machine onto its side, with the air filter up in the air, until the upper handle rests on the ground.

⚠ WARNING

The blades are sharp; contacting a blade could result in serious personal injury.

- **Disconnect the wire from the spark plug.**
- **Wear gloves when servicing the blade.**

Inspecting the Blades

Service Interval: Before each use or daily

1. Inspect the cutting edges (Figure 41). If the edges are not sharp or have nicks, remove the blades and have them sharpened or replace them.
2. Inspect the blades themselves, especially the curved area (Figure 41). If you notice any damage, wear, or a slot forming in this area (Figure 41), immediately replace it with a new blade.

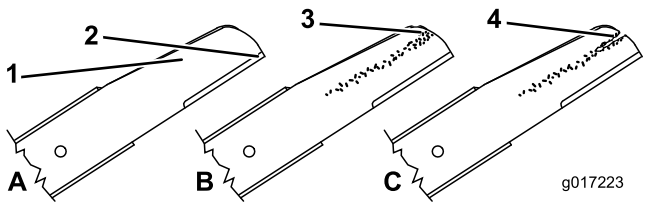

Figure 41

1. Cutting edge
2. Curved area
3. Wear/slot forming
4. Crack

⚠ DANGER

If you allow a blade to wear, a slot will form between the sail and flat part of the blade. Eventually a piece of the blade may break off and be thrown from under the housing, possibly resulting in serious injury to you or bystanders.

- **Inspect the blade periodically for wear or damage.**
- **Never try to straighten a blade that is bent or weld a broken or cracked blade.**
- **Replace a worn or damaged blade.**

3. Check for bent blades; refer to Checking for Bent Blades (page 21).

Checking for Bent Blades

1. Rotate the blades until they are positioned as shown in Figure 42.

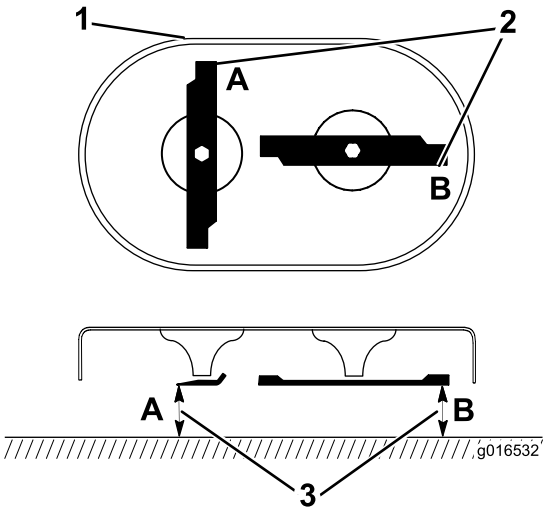

Figure 42

1. Front of cutting deck
2. Measure at locations A and B
3. Measure from the cutting edge to a smooth, level surface

2. Measure from a level surface to the cutting edges at locations **A** and **B**, (Figure 42), and record both dimensions.
3. Rotate the blades so that their opposite ends are at locations **A** and **B**.
4. Repeat the measurements in step 2 and record them.

   Note: If the difference between the dimensions **A** and **B** obtained in steps 2 and 4 exceeds 3 mm (1/8 inch), the blade is bent and must be replaced; refer to Removing the Blades (page 22) and Installing the Blades (page 22).

⚠ WARNING

A blade that is bent or damaged could break apart and could seriously injure or kill you or bystanders.

- **Always replace a bent or damaged blade with a new blade.**
- **Never file or create sharp notches in the edges or surfaces of a blade.**

Removing the Blades

Replace the blades when the machine hits a solid object or when a blade is out of balance or bent. Use only genuine Toro replacement blades.

1. Use a block of wood to hold each blade steady and turn the blade bolt counterclockwise as shown in Figure 43.

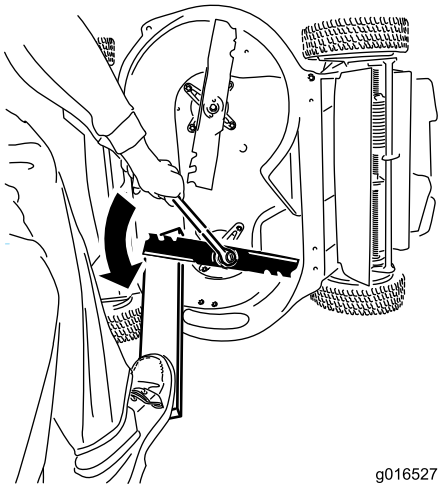

Figure 43

2. Remove each blade as shown in Figure 44.

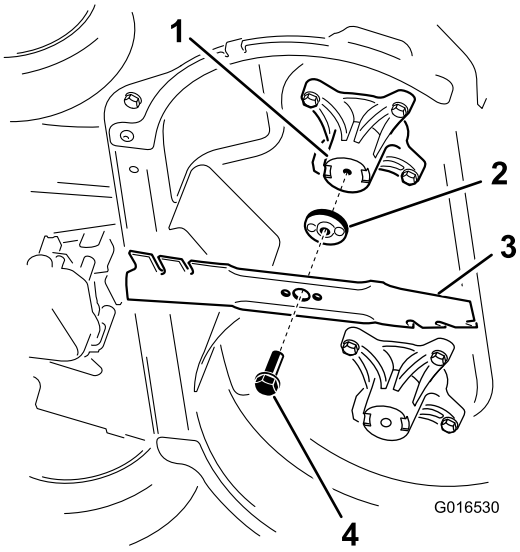

Figure 44

1. Spindle (2)
2. Blade driver (2)
3. Blade (2)
4. Blade bolt (2)

3. Inspect the pins on the blade drivers for wear and damage.

Installing the Blades

1. Install the first blade so that it is horizontal, along with all mounting hardware as shown in Figure 44.

   Note: Tighten the bolt with your fingers.

   Important: Position the curved ends of the blades to point toward the machine housing.

   Be sure to nest the raised areas on each blade driver with the recesses in the head of its corresponding spindle, and the pins on the other side of each blade driver with the holes in its corresponding blade.

2. Steady each blade with a board and turn the blade bolt clockwise with a torque wrench as shown in Figure 45; torque the blade bolt to 82 N-m (60 ft-lb).

   Important: A bolt torqued to 82 N-m (60 ft-lb) is very tight. Put your weight behind the wrench and tighten the bolt securely. This bolt is very difficult to overtighten.

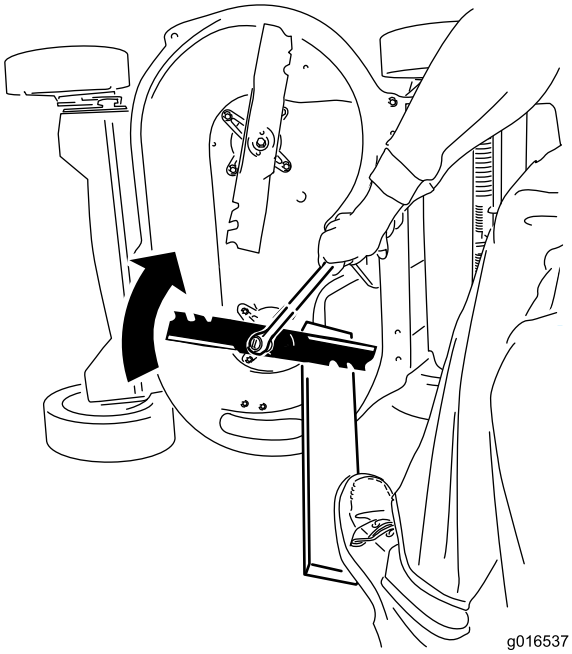

Figure 45

3. Rotate the installed blade 1/4 turn until it is vertical, and install the other blade in the same manner as the first (refer to step 1).

   Note: The blades should be perpendicular, forming an inverted "T" as shown in Figure 46.

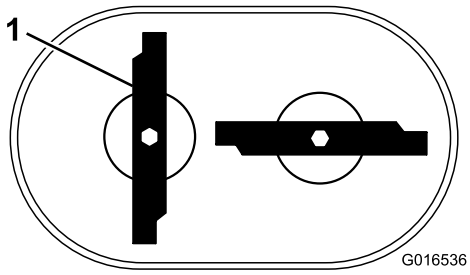

Figure 46

1. Blade (2)

4. Tighten the second blade; refer to step 2.
5. Rotate the blades by hand a full 360° turn to ensure that they do not touch.

   Note: If the blades touch each other, they are not mounted correctly. Repeat steps 1 through 3 until the blades no longer touch each other.

⚠ WARNING

Incorrectly installing the blades could damage the machine or cause an injury to the operator or to bystanders.

Washing Underneath the Machine

Service Interval: Before each use or daily—Wash underneath the machine.

1. Move the machine to a level surface.
2. Stop the engine and wait for all moving parts to stop before leaving the operating position.
3. Lower the machine to the lowest height-of-cut.
4. Attach a hose to the washout fitting, and turn the water on high (Figure 47).

   Note: Spread petroleum jelly on the washout fitting O-ring to make the coupling slide on easier and protect the O-ring.

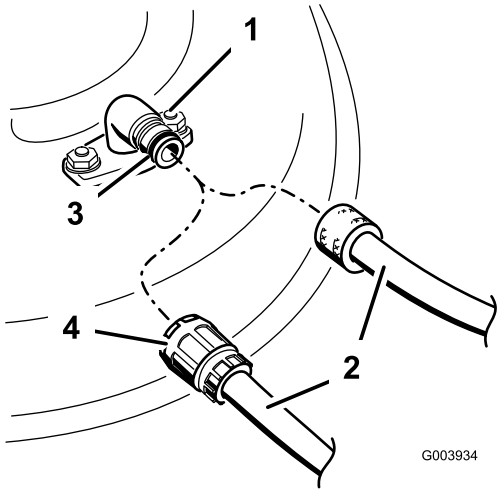

Figure 47

1. Washout fitting
2. Hose
3. O-ring
4. Coupling

5. Start the engine, engage the blade-control lever, and let the machine run for 1 to 3 minutes.
6. Disengage the blade-control lever, stop the engine, and wait for all moving parts to stop.
7. Shut off the water and remove the coupling from the washout fitting.

   Note: If the machine is not clean after a single washing, soak it and let it stand for 30 minutes. Then repeat the process.

8. Run the machine again and engage the blades for 1 to 3 minutes to remove the excess water.

⚠ WARNING

A broken or missing washout fitting could expose you and others to thrown objects or blade contact. Contact with a blade or thrown debris can cause injury or death.

- **Replace a broken or missing washout fitting immediately, before using the machine again.**
- **Never put your hands or feet under the machine or through openings in the mower.**

Storage

Store the machine in a cool, clean, dry place.

General Information

1. Perform the recommended annual maintenance procedures; refer to Maintenance (page 16).
2. Clean under the machine; refer to Washing Underneath the Machine (page 23).
3. Remove chaff, dirt, and grime from the external parts of the engine, the shrouding, and the top of the machine.
4. Check the condition of the blades; refer to Inspecting the Blades (page 21).
5. Service the air filter; refer to Servicing the Air Filter (page 17).
6. Tighten all nuts, bolts, and screws.
7. Touch up all rusted or chipped paint surfaces with paint available from an Authorized Service Dealer.
8. Charge the battery for 24 hours, then unplug the battery charger and store the machine in an unheated area. If you must store the machine in a heated area, you must charge the battery every 90 days (electric-start model only).
9. Fold the handle for storage; refer to Adjusting the Handle Height (page 10).

Preparing the Fuel System

⚠ WARNING

Gasoline can vaporize if you store it over long periods of time and explode if it comes into contact with an open flame.

- **Do not store gasoline over long periods of time.**
- **Do not store the machine with gasoline in the fuel tank or the carburetor in an enclosure with an open flame. (For example, a furnace or a water heater pilot light.)**
- **Allow the engine to cool before storing it in any enclosure.**

On the last refueling of the year, add fuel stabilizer to the fuel as directed by the engine manufacturer. Empty the fuel tank when mowing the last time before storing the machine.

1. Run the machine until the engine stops from running out of fuel.
2. Start the engine again.
3. Allow the engine to run until it stops. When you can no longer start the engine, it is sufficiently dry.

Preparing the Engine

1. While the engine is still warm, change the engine oil; refer to Changing the Engine Oil (page 17).
2. Remove the spark plug.
3. Using an oil can, add about 30 ml (1 oz.), of motor oil to the engine through the spark-plug hole.
4. Slowly pull the starter rope several times to distribute oil throughout the cylinder.
5. Install the spark plug but do not connect the wire to the spark plug. Secure the wire so that it does not come into contact with the spark plug.

Removing the Machine from Storage

1. Unfold the handle; refer to Adjusting the Handle Height (page 10).
2. Check and tighten all fasteners.
3. Remove the spark plug and spin the engine rapidly using the starter to blow excess oil from the cylinder.
4. Inspect the spark plug and replace it if it is dirty, worn, or cracked; refer to the *Engine Operator's Manual*.
5. Install the spark plug and tighten it to the recommended torque of 20 N-m (180 in-lb).
6. Perform any needed maintenance procedures; refer to Maintenance (page 16).
7. Check the engine oil level; refer to Checking the Engine Oil Level (page 9).
8. Fill the fuel in the fuel tank with fresh gasoline; refer to Filling the Fuel Tank (page 8).
9. Charge the battery (electric-start model only); refer to Charging the Battery (page 18).
10. Connect the wire to the spark plug.

Notes:

International Distributor List

Distributor:	Country:	Phone Number:	Distributor:	Country:	Phone Number:
Atlantis Su ve Sulama Sisstemleri Lt	Turkey	90 216 344 86 74	Maquiver S.A.	Colombia	57 1 236 4079
Balama Prima Engineering Equip.	Hong Kong	852 2155 2163	Maruyama Mfg. Co. Inc.	Japan	81 3 3252 2285
B-Ray Corporation	Korea	82 32 551 2076	Agrolanc Kft	Hungary	36 27 539 640
Casco Sales Company	Puerto Rico	787 788 8383	Mountfield a.s.	Czech Republic	420 255 704 220
Ceres S.A.	Costa Rica	506 239 1138	Munditol S.A.	Argentina	54 11 4 821 9999
CSSC Turf Equipment (pvt) Ltd.	Sri Lanka	94 11 2746100	Oslinger Turf Equipment SA	Ecuador	593 4 239 6970
Cyril Johnston & Co.	Northern Ireland	44 2890 813 121	Oy Hako Ground and Garden Ab	Finland	358 987 00733
Equiver	Mexico	52 55 539 95444	Parkland Products Ltd.	New Zealand	64 3 34 93760
Femco S.A.	Guatemala	502 442 3277	Prato Verde S.p.A.	Italy	39 049 9128 128
G.Y.K. Company Ltd.	Japan	81 726 325 861	Prochaska & Cie	Austria	431 278 5100
Geomechaniki of Athens	Greece	30 10 935 0054	RT Cohen 2004 Ltd.	Israel	972 986 17979
Guandong Golden Star	China	86 20 876 51338	Riversa	Spain	34 9 52 83 7500
Hako Ground and Garden	Sweden	46 35 10 0000	Sc Svend Carlsen A/S	Denmark	45 66 109 200
Hako Ground and Garden	Norway	47 22 90 7760	Solvert S.A.S.	France	33 1 30 81 77 00
Hayter Limited (U.K.)	United Kingdom	44 1279 723 444	Spypros Stavrinides Limited	Cyprus	357 22 434131
Hydroturf Int. Co Dubai	United Arab Emirates	97 14 347 9479	Surge Systems India Limited	India	91 1 292299901
Hydroturf Egypt LLC	Egypt	202 519 4308	T-Markt Logistics Ltd.	Hungary	36 26 525 500
Irriamc	Portugal	351 21 238 8260	Toro Australia	Australia	61 3 9580 7355
Irrigation Products Int'l Pvt Ltd.	India	86 22 83960789	Toro Europe NV	Belgium	32 14 562 960
Jean Heybroek b.v.	Netherlands	31 30 639 4611			

European Privacy Notice

The Information Toro Collects
Toro Warranty Company (Toro) respects your privacy. In order to process your warranty claim and contact you in the event of a product recall, we ask you to share certain personal information with us, either directly or through your local Toro company or dealer.

The Toro warranty system is hosted on servers located within the United States where privacy law may not provide the same protection as applies in your country.

BY SHARING YOUR PERSONAL INFORMATION WITH US, YOU ARE CONSENTING TO THE PROCESSING OF YOUR PERSONAL INFORMATION AS DESCRIBED IN THIS PRIVACY NOTICE.

The Way Toro Uses Information
Toro may use your personal information to process warranty claims, to contact you in the event of a product recall and for any other purpose which we tell you about. Toro may share your information with Toro's affiliates, dealers or other business partners in connection with any of these activities. We will not sell your personal information to any other company. We reserve the right to disclose personal information in order to comply with applicable laws and with requests by the appropriate authorities, to operate our systems properly or for our own protection or that of other users.

Retention of your Personal Information
We will keep your personal information as long as we need it for the purposes for which it was originally collected or for other legitimate purposes (such as regulatory compliance), or as required by applicable law.

Toro's Commitment to Security of Your Personal Information
We take reasonable precautions in order to protect the security of your personal information. We also take steps to maintain the accuracy and current status of personal information.

Access and Correction of your Personal Information
If you would like to review or correct your personal information, please contact us by email at legal@toro.com.

Australian Consumer Law

Australian customers will find details relating to the Australian Consumer Law either inside the box or at your local Toro Dealer.

The Toro Warranty and The Toro GTS Starting Guarantee

Conditions and Products Covered

The Toro Company and its affiliate, Toro Warranty Company, pursuant to an agreement between them, jointly promise to repair for the original purchaser[1] the Toro Product listed below if defective in materials or workmanship or if the Toro GTS (Guaranteed to Start) engine will not start on the first or second pull, provided the routine maintenance required in the *Operator's Manual* have been performed.

The following time periods apply from the date of purchase:

Products	Warranty Period
Walk Power Mowers	
• Cast Deck	5 years Residential Use[2] 90 Days Commercial Use
• Engine	5 years GTS Guarantee, Residential Use[3]
• Battery	2 years
• Steel Deck	2 years Residential Use[2] 90 Days Commercial Use
• Engine	2 years GTS Guarantee, Residential Use[3]
TimeMaster Mowers	3 years Residential Use[2] 90 Days Commercial Use
• Engine	3 years GTS Guarantee, Residential Use[3]
• Battery	2 years
Electric Hand Held Products	2 years Residential Use[2] No Warranty for Commercial Use
Snowthrowers	
• Single Stage	2 years Residential Use[2] 45 Days Commercial Use
• Engine	2 years GTS Guarantee, Residential Use[3]
• Two Stage	3 years Residential Use[2] 45 Days Commercial Use
• Chute, chute deflector and impeller housing cover	Lifetime (original owner only)[5]
Electric Snowthrowers	2 years Residential Use[2] No Warranty for Commercial Use
All Ride-On Units Below	
• Engine	See engine manufacturer's warranty[4]
• Battery	2 years Residential Use[2]
• Attachments	2 years Residential Use[2]
DH Lawn & Garden Tractors	2 years Residential Use[2] 90 Days Commercial Use
XLS Lawn & Garden Tractors	3 years Residential Use[2] 90 Days Commercial Use
TimeCutter	3 years Residential Use[2] 90 Days Commercial Use
TITAN Mowers	3 years or 240 hours[5]
• Frame	Lifetime (original owner only)[6]
Z Master Mowers — 2000 Series	4 years or 500 hours[5]
• Frame	Lifetime (original owner only)[6]

[1]Original Purchaser means the person who originally purchased the Toro Product.

[2]Residential use means use of the product on the same lot as your home. Use at more than one location is considered commercial use and the commercial use warranty would apply.

[3]The Toro GTS Starting Guarantee does not apply when the product is used commercially.

[4]Some engines used on Toro Products are warranted by the engine manufacturer.

[5]Whichever occurs first.

[6]Lifetime Frame Warranty - If the main frame, consisting of the parts welded together to form the tractor structure that other components such as the engine are secured to, cracks or breaks in normal use, it will be repaired or replaced, at Toro's option, under warranty at no cost for parts and labor. Frame failure due to misuse or abuse and failure or repair required due to rust or corrosion are not covered.

This warranty covers the cost of parts and labor, but you must pay transportation costs.

Warranty may be denied if the hour meter is disconnected, altered, or shows signs of being tampered with.

Owner Responsibilities

You must maintain your Toro Product by following the maintenance procedures described in the *Operator's Manual*. Such routine maintenance, whether performed by a dealer or by you, is at your expense.

Instructions for Obtaining Warranty Service

If you think that your Toro Product contains a defect in materials or workmanship, follow this procedure:

1. Contact your seller to arrange service of the product. If for any reason it is impossible for you to contact your seller, you may contact any Toro Authorized Distributor to arrange service. See attached Distributor List.
2. Bring the product and your proof of purchase (sales receipt) to the servicing outlet. If for any reason you are dissatisfied with the servicing outlet's analysis or with the assistance provided, contact us at:

   Toro Customer Care Department, RLC Division
   Toro Warranty Company
   8111 Lyndale Avenue South
   Bloomington, MN 55420-1196
   001–952–948–4707

Items and Conditions Not Covered

This express warranty does not cover the following:

- Cost of regular maintenance service or wear parts, such as blades, rotor blades (paddles), scraper blades, belts, fuel, lubricants, oil changes, spark plugs, pneumatic tires, cable/linkage or brake adjustments
- Any product or part which has been altered or misused and requires replacement or repair due to accidents or lack of proper maintenance
- Repairs necessary due to failure to use fresh fuel (less than one month old), or failure to properly prepare the unit prior to any period of non-use over one month
- All repairs covered by these warranties must be performed by an authorized Toro servicing outlet using approved replacement parts.

General Conditions

The purchaser is covered by the national laws of each country. The rights to which the purchaser is entitled with the support of these laws are not restricted by this warranty.