Form No. 3375-380 Rev A

TORO®

Count on it.

Parts Catalog

CM-250E-PWB Concrete Mixer

Model No. 68003—Serial No. 313000001 and Up

Register at www.Toro.com.
Original Instructions (EN)

3375-380 A

Concrete Mixer Assembly with Stand

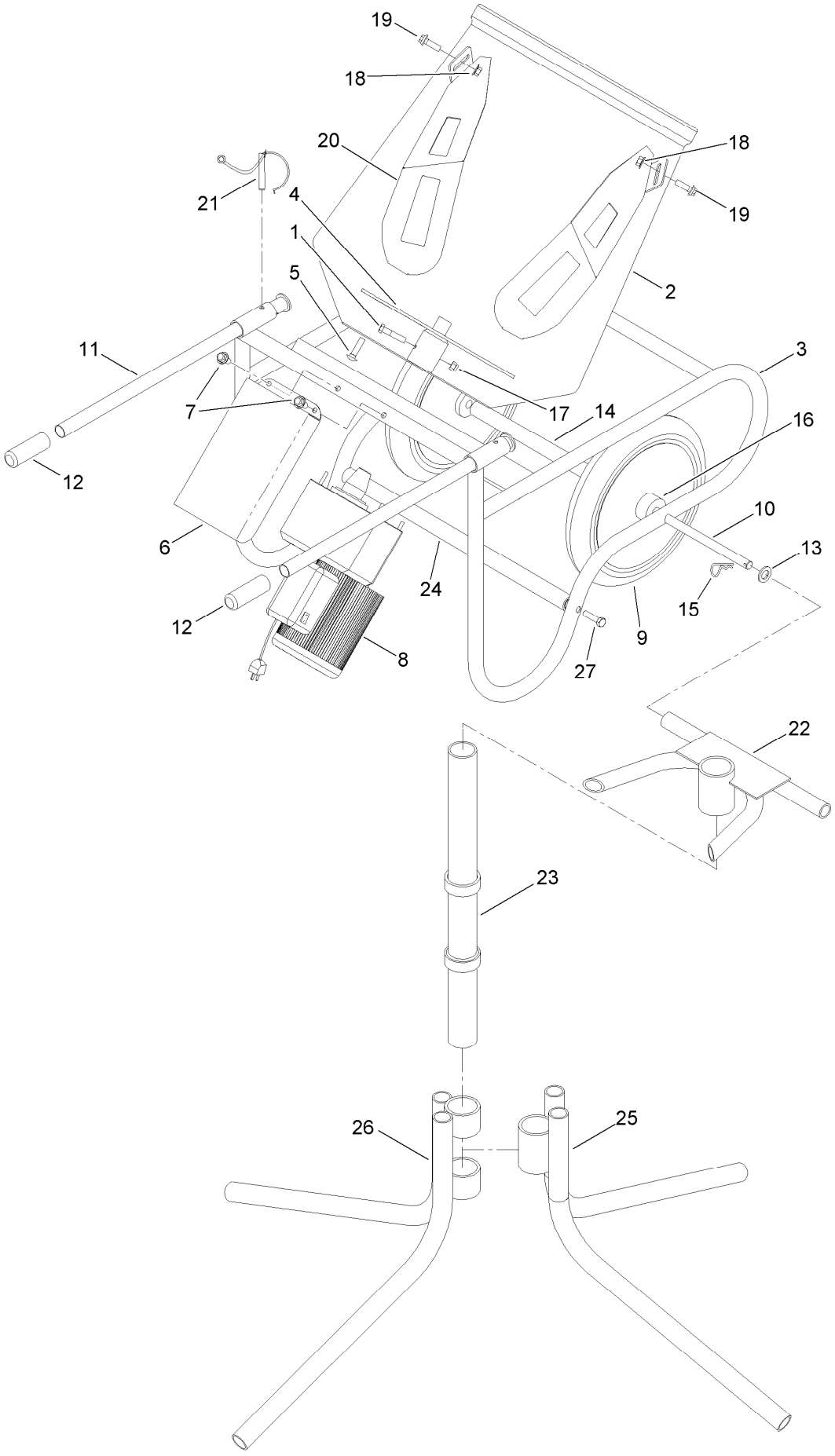

Concrete Mixer Assembly with Stand (continued)

Ref.	Part Number	Qty.	Description
1	127-5527	1	Bolt
2	127-5528	1	Drum-Polyethylene
3	127-5529	1	Frame-Wheelbarrow
4	127-5530	1	Inside Plate ASM (W/ Straight Bushing)
5	3234-18	12	Screw-HHF
6	127-5531	1	Cover-Motor
7	127-5532	2	Screw-Whizlock
8	127-5533	1	Gear Motor ASM
9	127-5534	2	Flat Free Wheel ASM
10	127-5547	1	Axle
11	127-5535	2	Handle-Frame
12	127-5536	2	Grip-Handle
13	1-303007	2	Washer
14	127-5537	1	Spacer-Tube, Axle
15	127-5538	2	Clip-R
16	127-5539	4	Bearing-Wheel
17	3290-357	13	Nut-HHF, Whiz
18	32128-20	4	Nut-HF
19	3234-17	2	Screw-HHF
20	127-5540	2	Blade-Mixing
21	127-5541	2	Pin-Locking (W/ Lanyards)
22	127-5542	1	Brace-Support, Tri-Pod Stand
23	127-5543	1	Support-Vertical, Tri-Pod Stand
24	127-5544	1	Bracket-Horizontal, Tri-Pod Stand
25	127-5545	1	Pipe-Support, Leg 1 (Tri-Pod Stand)
26	127-5546	1	Pipe-Support, Leg 2 (Tri-Pod Stand)
27	3234-18	1	Screw-HHF



Count on it.