Form No. 3375-669 Rev A

Trash Bag Kit

GrandStand® Mower

Model No. 121-6039

Installation Instructions

This kit can be installed on either side of the machine. Installing it on the left side allows for installation of the Chute Gate Kit on the right side. Two kits can be installed, one on the left and one on the right.

Loose Parts

Use the chart below to verify that all parts have been shipped.

Procedure	Description	Qty.	Use
1	Bracket Thread-forming bolt (3/8 x 1 inch)	1 2	Install the bag bracket to the mower
2	Cup holder Bolt (#10 x 5/8 inch) Flat Washer Locknut (#10)	1 2 2 2	Install the cup holder
3	Trash bag	1	Install the trash bag

1

Installing the Bracket to the Mower

Parts needed for this procedure:

1	Bracket
2	Thread-forming bolt (3/8 x 1 inch)

Procedure

Install the bracket to the side of the machine with 2 thread-forming bolts (3/8 x 1 inch).

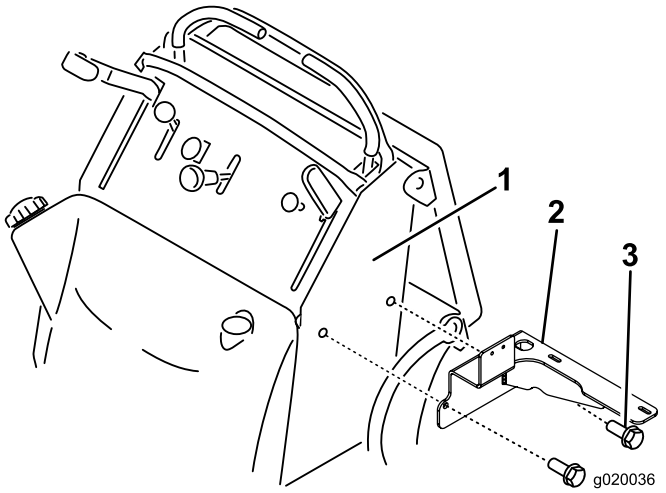

Figure 1

1. Left side of machine
2. Bracket
3. Thread-forming bolt, (3/8 x 1 inch)

© 2012—The Toro® Company
8111 Lyndale Avenue South
Bloomington, MN 55420

Register at www.Toro.com.

Original Instructions (EN)
Printed in the USA.
All Rights Reserved

3375-669 A

2

Installing the Cup Holder

Parts needed for this procedure:

1	Cup holder
2	Bolt (#10 x 5/8 inch)
2	Flat Washer
2	Locknut (#10)

Procedure

Install the cup holder to the bag bracket with 2 bolts (#10 x 5/8 inch), 2 washers, and 2 locknuts (#10) (Figure 2). Position the washers between the bracket and the bolts.

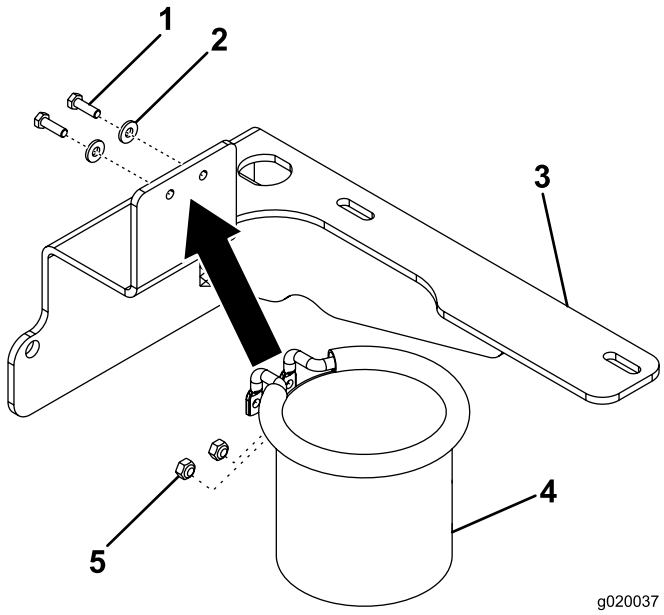

Figure 2

1. Bolt (#10 x 5/8)
2. Flat washer
3. Bracket
4. Cup holder
5. Locknut (#10)

3

Installing the Trash Bag

Parts needed for this procedure:

1	Trash bag

Procedure

Install the trash bag into the slots in the bag bracket (Figure 3).

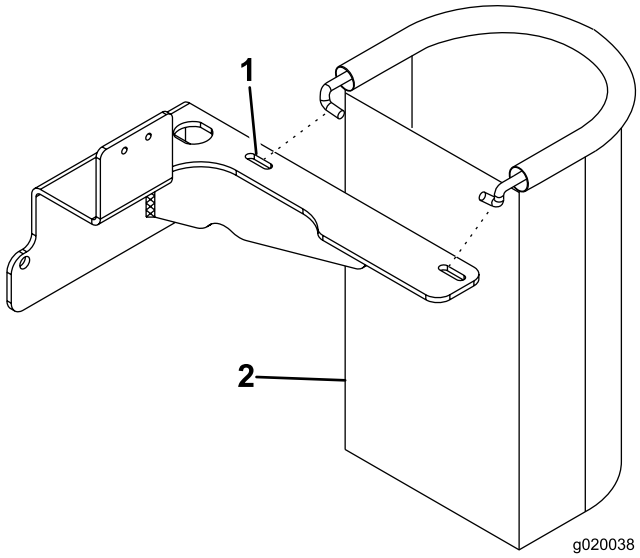

Figure 3

1. Bracket
2. Trash bag