Form No. 3375-681 Rev A

TORO®

Count on it.

Parts Catalog

Trash Bag Kit

GrandStand® Mower with 60-inch/122cm Cutting Unit

Model No. 121-6039

Register at www.Toro.com.
Original Instructions (EN)

3375-681 A

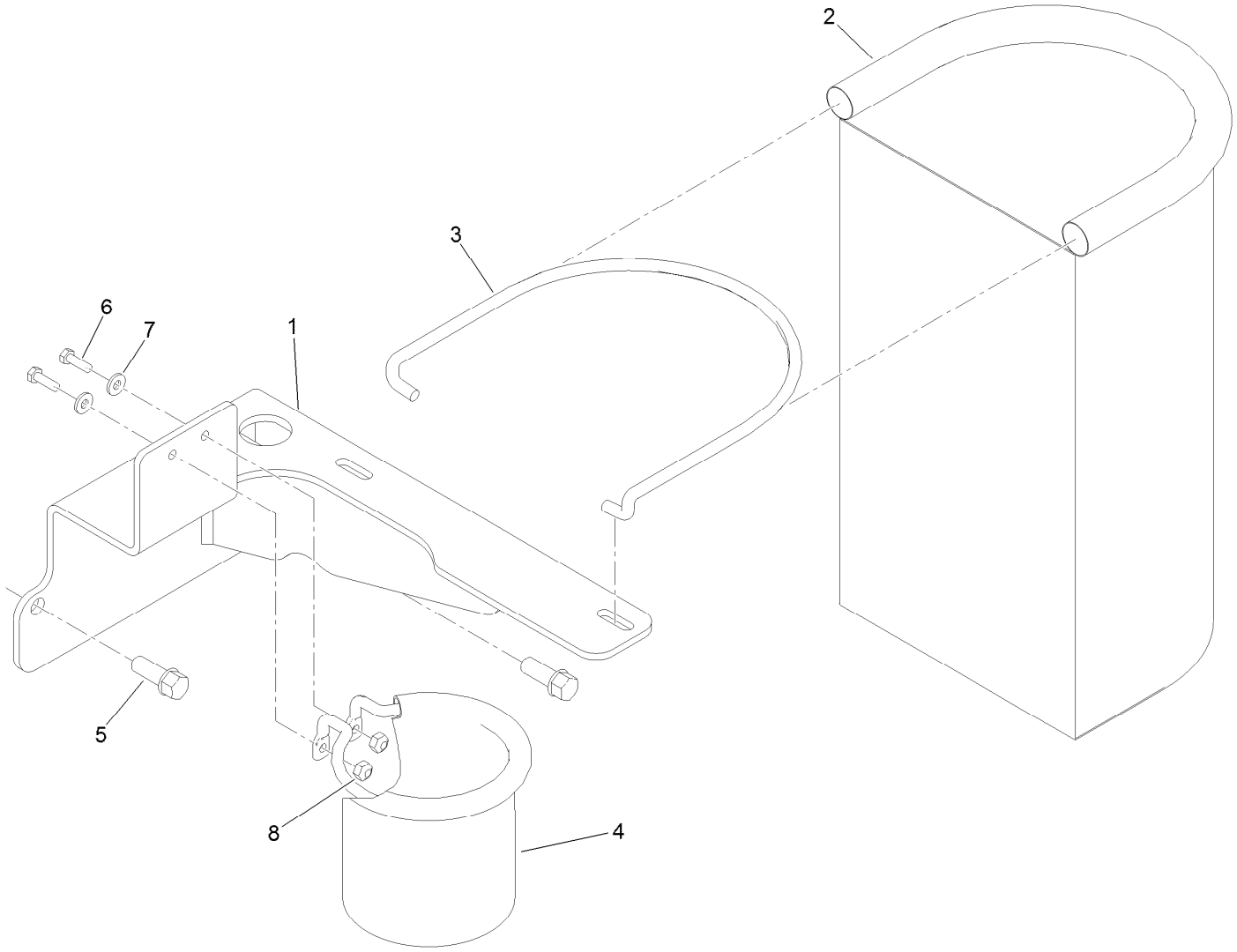

Trash Bag Kit Assembly No. 121-6039

Ref.	*Part Number*	*Qty.*	*Description*
1	121-6038-01	1	Trash Bag Bracket ASM
2	103-5971	1	Bag-Trash
3	117-0546	1	Rod-Bag, Trash
4	117-2378	1	Bag Holder ASM
5	92-1624	2	Screw-HWH
6	3290-134	2	Screw
7	3256-14	2	Washer-Flat
8	3296-2	2	Nut-Lock, NI