Form No. 3375-707 Rev A

TORO®

Count on it.

Operator's Manual

TimeCutter® ZS 4200 or 5000 Riding Mower

Model No. 74386—Serial No. 313000001 and Up
Model No. 74387—Serial No. 313000001 and Up

Register at www.Toro.com.
Original Instructions (EN)

3375-707 A

This machine is a ride-on, rotary-blade intended to be used by homeowners in residential applications. It is primarily designed for cutting grass on well-maintained lawns. It is not designed for cutting brush, mowing grass and other growth alongside highways, or for agricultural uses.

This product complies with all relevant European directives, for details please see the separate product specific Declaration of Conformity (DOC) sheet.

Gross Horsepower

The gross or net horsepower of this engine was laboratory rated by the engine manufacturer in accordance with the Society of Automotive Engineers (SAE) J1940. As configured to meet safety, , and operating requirements, the actual engine torque on this class of mower will be significantly lower.

Go to www.Toro.com to view specifications on your mower model.

Introduction

Read this information carefully to learn how to operate and maintain your product properly and to avoid injury and product damage. You are responsible for operating the product properly and safely.

You may contact Toro directly at www.Toro.com for product and accessory information, help finding a dealer, or to register your product.

Whenever you need service, genuine Toro parts, or additional information, contact an Authorized Service Dealer or Toro Customer Service and have the model and serial numbers of your product ready. Figure 1 identifies the location of the model and serial numbers on the product. Write the numbers in the space provided.

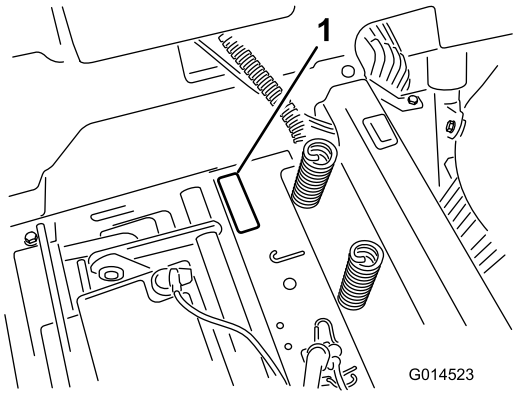

Figure 1
Under the seat

1. Model and serial number plate

Write the product model and serial numbers in the space below:

Model No. _____

Serial No. _____

This manual identifies potential hazards and has safety messages identified by the safety alert symbol (Figure 2), which signals a hazard that may cause serious injury or death if you do not follow the recommended precautions.



Figure 2

1. Safety alert symbol.

This manual uses two other words to highlight information. **Important** calls attention to special mechanical information and **Note** emphasizes general information worthy of special attention.

© 2012—The Toro® Company
8111 Lyndale Avenue South
Bloomington, MN 55420

Contact us at www.Toro.com.
Printed in the USA.
All Rights Reserved

Contents

Safety 4
Safe Operation Practices for Ride-on (riding) Rotary Lawn Mower Machines 4
Safe Operating Practices 4
Toro Riding Mower Safety 5
Model 74386 6
Model 74387 6
Slope Indicator 7
Safety and Instructional Decals 8
Product Overview 14
Controls 15
Operation 16
Think Safety First 16
Before Starting 18
Starting the Engine 19
Operating the Blades 20
Testing the Safety Interlock System 20
Stopping the Engine 21
Driving 21
Stopping the Machine 22
Adjusting the Height of Cut 23
Adjusting the Anti-Scalp Rollers (For 42 inch Mower Decks) 23
Adjusting the Anti-Scalp Rollers (For 50 inch Mower Decks) 23
Positioning the Seat 24
Adjusting the Motion Control Levers 24
Pushing the Machine by Hand 25
Grass Deflector 26
Converting to Side Discharge (For Models with 42 Inch Decks) 26
Converting to Side Discharge (For Models with 50 Inch Decks) 27
Operating Tips 29
Maintenance 30
Recommended Maintenance Schedule(s) 30
Premaintenance Procedures 31
Raising the Seat 31
Lubrication 31
Greasing the Bearings 31
Engine Maintenance 32
Servicing the Air Cleaner 32
Servicing the Engine Oil 32
Servicing the Spark Plug 34
Cleaning the Cooling System 35
Fuel System Maintenance 36
Replacing the In-line Fuel Filter 36
Electrical System Maintenance 37
Charging the Battery 37
Servicing the Fuses 38
Drive System Maintenance 39
Checking the Tire Pressure 39
Releasing the Electric Brake 39
Mower Maintenance 40
Servicing the Cutting Blades 40
Leveling the Mower Deck 42
Removing the Mower 45
Mower Belt Maintenance 46
Installing the Mower 47
Replacing the Grass Deflector 47
Cleaning 48
Washing the Underside of the Mower 48
Storage 49
Cleaning and Storage 49
Troubleshooting 50
Schematics 52

Safety

Safe Operation Practices for Ride-on (riding) Rotary Lawn Mower Machines

This machine meets or exceeds European Standards in effect at the time of production. However, improper use or maintenance by the operator or owner can result in injury. To reduce the potential for injury, comply with these safety instructions and always pay attention to the safety alert symbol, which means CAUTION, WARNING, or DANGER -"personal safety instruction." Failure to comply with the instruction may result in personal injury or death.

Safe Operating Practices

The following instructions are from the EN standard EN 836:1997.

This product is capable of amputating hands and feet and throwing objects. Always follow all safety instructions to avoid serious injury or death.

Training

- Read the instructions carefully. Be familiar with the controls and the proper use of the equipment.
- Never allow children or people unfamiliar with these instructions to use the lawn mower. Local regulations can restrict the age of the operator.
- Never mow while people, especially children, or pets are nearby.
- Keep in mind that the operator or user is responsible for accidents or hazards occurring to other people or their property.
- Do not carry passengers.
- All drivers should seek and obtain professional and practical instruction. Such instruction should emphasize:
  - the need for care and concentration when working with ride-on machines;
  - control of a ride-on machine sliding on a slope will not be regained by the application of the brake. The main reasons for loss of control are:
    - ◊ insufficient wheel grip;
    - ◊ being driven too fast;
    - ◊ inadequate braking;
    - ◊ the type of machine is unsuitable for its task;
    - ◊ lack of awareness of the effect of ground conditions, especially slopes;
    - ◊ incorrect hitching and load distribution.

Preparation

- While mowing, always wear substantial footwear and long trousers. Do not operate the equipment when barefoot or wearing open sandals.
- Thoroughly inspect the area where the equipment is to be used and remove all objects which may be thrown by the machine.
- Warning-Fuel is highly flammable.
  - Store fuel in containers specifically designed for this purpose.
  - Refuel outdoors only and do not smoke while refuelling.
  - Add fuel before starting the engine. Never remove the cap of the fuel tank or add fuel while the engine is running or when the engine is hot.
  - If fuel is spilled, do not attempt to start the engine but move the machine away from the area of spillage and avoid creating any source of ignition until fuel vapors have dissipated.
  - Replace all fuel tanks and container caps securely.
- Replace faulty silencers.
- Before using, always visually inspect to see that the blades, blade bolts and cutter assembly are not worn or damaged. Replace worn or damaged blades and bolts in sets to preserve balance.
- On multi-bladed machines, take care as rotating one blade can cause other blades to rotate.

Operation

- Be alert, slow down and use caution when making turns. Look behind and to the side before changing directions.
- Do not operate the engine in a confined space where dangerous carbon monoxide fumes can collect.
- Mow only in daylight or in good artificial light.
- Before attempting to start the engine, disengage all blade attachment clutches and shift into neutral.
- Do not use on slopes of more than 15 degrees.
- Remember there is no such thing as a safe slope. Travel on grass slopes requires particular care. To guard against overturning:
  - do not stop or start suddenly when going up or downhill;
  - use low speeds on slopes and during tight turns;
  - stay alert for humps and hollows and other hidden hazards;
- Use care when pulling loads.
  - Use only approved drawbar hitch points.
  - Limit loads to those you can safely control.
  - Do not turn sharply. Use care when reversing.
- Watch out for traffic when crossing or near roadways.
- Stop the blades rotating before crossing surfaces other than grass.

- When using any attachments, never direct discharge of material toward bystanders nor allow anyone near the machine while in operation.
- Never operate the machine with damaged guards or without safety protective devices in place.
- Do not change the engine governor settings or overspeed the engine. Operating the engine at excessive speed can increase the hazard of personal injury.
- Before leaving the operator's position:
  - disengage the power take-off and lower the attachments;
  - change into neutral and set the parking brake;
  - stop the engine and remove the key.
- Disengage drive to attachments, stop the engine, and disconnect the spark plug wire(s) or remove the ignition key
  - before clearing blockages or unclogging chute;
  - before checking, cleaning or working on the lawn mower;
  - after striking a foreign object. Inspect the lawn mower for damage and make repairs before restarting and operating the equipment;
  - if the machine starts to vibrate abnormally (check immediately).
- Disengage drive to attachments when transporting or not in use.
- Stop the engine and disengage drive to attachment
  - before refuelling;
  - before removing the grass catcher;
  - before making height adjustment unless adjustment can be made from the operator's position.
- Reduce the throttle setting during engine run-out and, if the engine is provided with a shut-off valve, turn the fuel off at the conclusion of mowing.
- Lightning can cause severe injury or death. If lightning is seen or thunder is heard in the area, do not operate the machine; seek shelter.

Maintenance and Storage

- Keep all nuts, bolts and screws tight to be sure the equipment is in safe working condition.
- Never store the equipment with fuel in the tank inside a building where fumes can reach an open flame or spark.
- Allow the engine to cool before storing in any enclosure.
- To reduce the fire hazard, keep the engine, silencer, battery compartment and fuel storage area free of grass, leaves, or excessive grease.
- Check the grass catcher frequently for wear or deterioration.
- Replace worn or damaged parts for safety.
- If the fuel tank has to be drained, this should be done outdoors.
- When machine is to be parked, stored or left unattended, lower the cutting means.

Toro Riding Mower Safety

The following list contains safety information specific to Toro products or other safety information that you must know that is not included in the CEN standard.

- Engine exhaust contains carbon monoxide, which is an odorless, deadly poison that can kill you. Do not run engine indoors or in an enclosed area.
- Keep hands, feet, hair and loose clothing away from attachment discharge area, underside of mower and any moving parts while engine is running.
- Do not touch equipment or attachment parts which may be hot from operation. Allow to cool before attempting to maintain, adjust, or service.
- Battery acid is poisonous and can cause burns. Avoid contact with skin, eyes and clothing. Protect your face, eyes, and clothing when working with a battery.
- Battery gases can explode. Keep cigarettes, sparks, and flames away from battery.
- Use only genuine Toro replacement parts to ensure that original standards are maintained.
- Use only Toro-approved attachments.

Slope Operation

- Do not mow slopes greater than 15 degrees.
- Do not mow near drop-offs, ditches, steep banks, or water. Wheels dropping over edges can cause rollovers, which may result in serious injury, death, or drowning.
- Do not mow slopes when grass is wet. Slippery conditions reduce traction and could cause sliding and loss of control.
- Do not make sudden turns or rapid speed changes.
- Use a walk behind mower and/or a hand trimmer near drop-offs, ditches, steep banks, or water.
- Reduce speed and use extreme caution on slopes.
- Remove or mark obstacles such as rocks, tree limbs, etc. from mowing area. Tall grass can hide obstacles.
- Watch for ditches, holes, rocks dips, and rises that change the operating angle, as rough terrain could overturn the machine.
- Avoid sudden starts when mowing uphill because the mower may tip backwards.
- Be aware that loss of traction may occur going downhill. Weight transfer to the front wheels may cause drive wheels to slip and cause loss of braking and steering.
- Always avoid sudden starting or stopping on a slope. If tires lose traction, disengage the blades and proceed slowly off the slope.

- Follow the manufacturer's recommendations for wheel weights or counterweights to improve stability.
- Use extreme care with grass catchers or other attachments. These can change the stability of the machine and cause loss of control.

Model 74386

Sound Pressure

This unit has a sound pressure level at the operator's ear of 89 dBA, which includes an Uncertainty Value (K) of 1 dBA.

Sound power level was determined according to the procedures outlined in EN 836.

Sound Power

This unit has a guaranteed sound power level of 100 dBA, which includes an Uncertainty Value (K) of 1 dBA.

Sound power level was determined according to the procedures outlined in ISO 11094.

Vibration

Measured vibration level for right hand = 1.3 m/s^2

Measured vibration level for left hand = 1.3 m/s^2

Uncertainty Value (K) =0.7 m/s^2

Measured values were determined according to the procedures outlined in EN 836.

Whole Body Vibration

Measured vibration level = 0.33 m/s^2

Uncertainty Value (K) = 0.16 m/s^2

Measured values were determined according to the procedures outlined in EN 836 (Riding & Stand-Ons).

Model 74387

Sound Pressure

This unit has a sound pressure level at the operator's ear of 94 dBA, which includes an Uncertainty Value (K) of 1 dBA.

Sound power level was determined according to the procedures outlined in EN 836.

Sound Power

This unit has a guaranteed sound power level of 105 dBA, which includes an Uncertainty Value (K) of 1 dBA.

Sound power level was determined according to the procedures outlined in ISO 11094.

Vibration

Measured vibration level for right hand = 1.9 m/s^2

Measured vibration level for left hand = 2.8 m/s^2

Uncertainty Value (K) = 1.4 m/s^2

Measured values were determined according to the procedures outlined in EN 836.

Whole Body Vibration

Measured vibration level = 0.37 m/s^2

Uncertainty Value (K) = 0.19 m/s^2

Measured values were determined according to the procedures outlined in EN 836 (Riding & Stand-Ons).

Slope Indicator

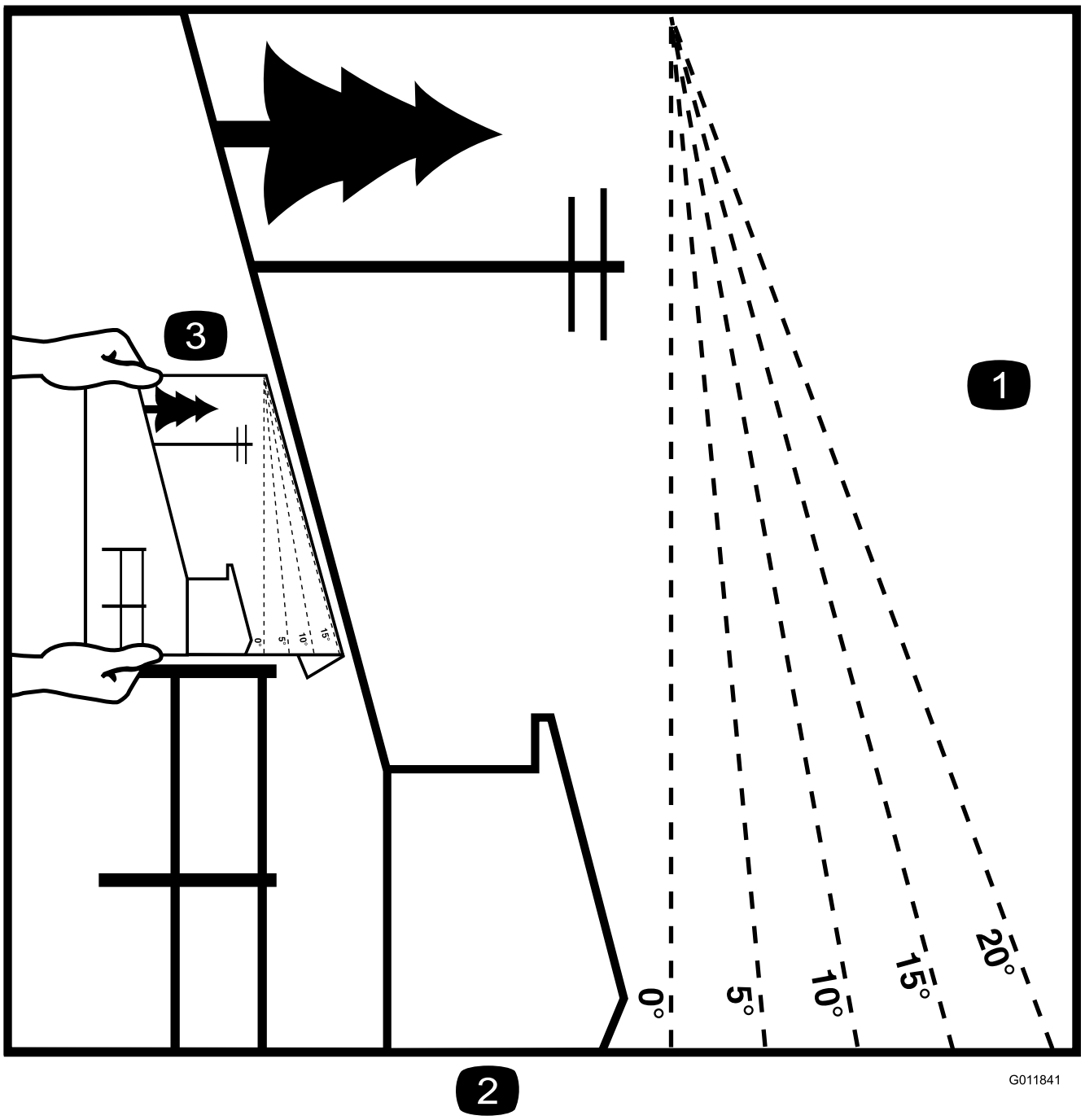

Figure 3

This page may be copied for personal use.

1. The maximum slope you can safely operate the machine on is **15 degrees**. Use the slope chart to determine the degree of slope of hills before operating. **Do not operate this machine on a slope greater than 15 degrees.** Fold along the appropriate line to match the recommended slope.
2. Align this edge with a vertical surface, a tree, building, fence pole, etc.
3. Example of how to compare slope with folded edge.

Safety and Instructional Decals

Safety decals and instructions are easily visible to the operator and are located near any area of potential danger. Replace any decal that is damaged or lost.

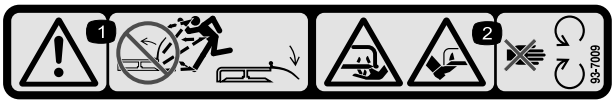

93-7009

1. Warning—don't operate the mower with the deflector up or removed; keep the deflector in place.
2. Cutting/dismemberment hazard of hand or foot, mower blade—stay away from moving parts.

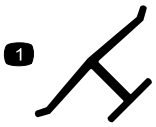

Manufacturer's Mark

1. Indicates the blade is identified as a part from the original machine manufacturer.

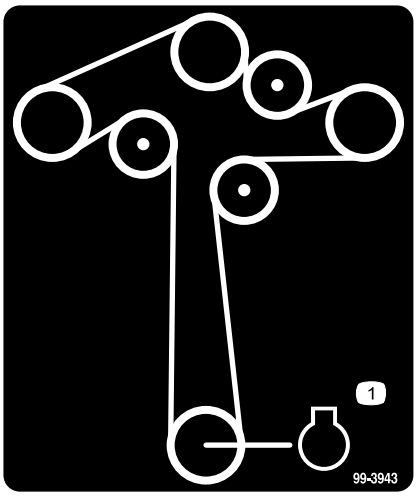

99-3943

For Models with 50 Inch Decks

1. Engine

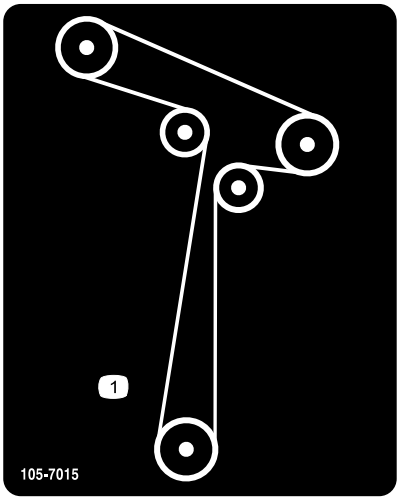

105-7015

For Models with 42 Inch Decks

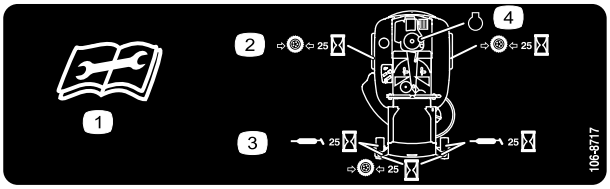

106-8717

1. Read the instructions before servicing or performing maintenance.
2. Check tire pressure every 25 operating hours.
3. Grease every 25 operating hours.
4. Engine

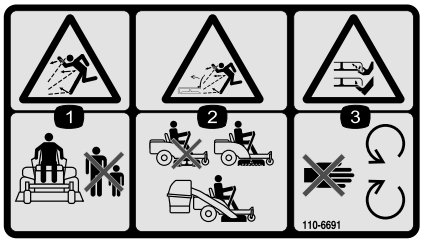

110-6691

1. Thrown object hazard—keep bystanders a safe distance from the machine.
2. Thrown object hazard, mower—do not operate without the deflector, discharge cover, or grass collection system in place.
3. Cutting/dismemberment of hand or foot—stay away from moving parts.

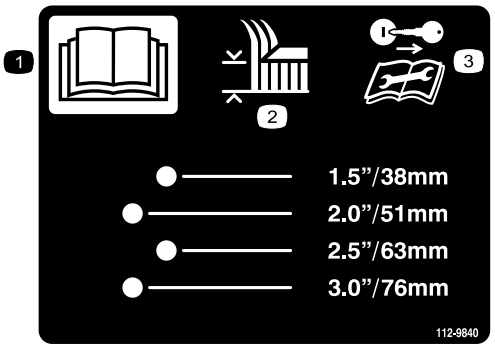

112-9840

1. Read the *Operator's Manual*.
2. Height of cut
3. Remove the ignition key and read the instructions before servicing or performing maintenance.

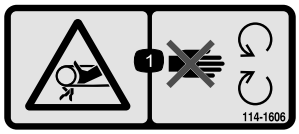

114-1606

1. Entanglement hazard, belt—keep all guards in place.

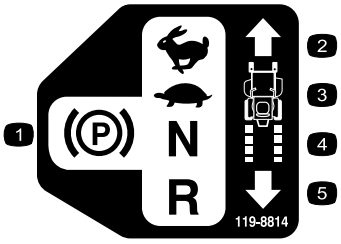

119-8814

1. Parking position
2. Fast
3. Slow
4. Neutral
5. Reverse

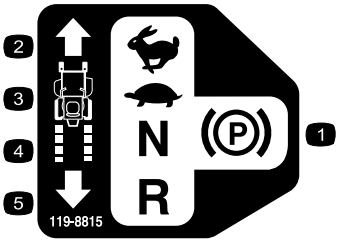

119-8815

1. Parking position
2. Fast
3. Slow
4. Neutral
5. Reverse

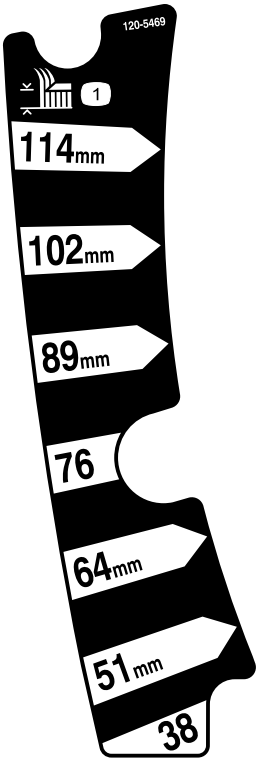

120-5469

1. Height-of-cut

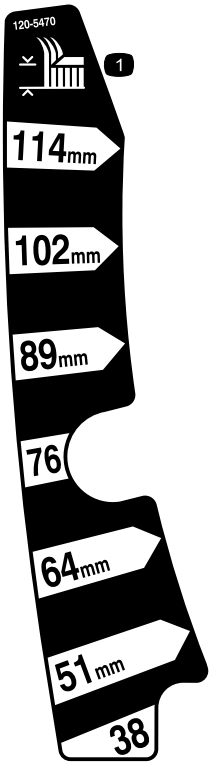

120-5470

1. Height-of-cut

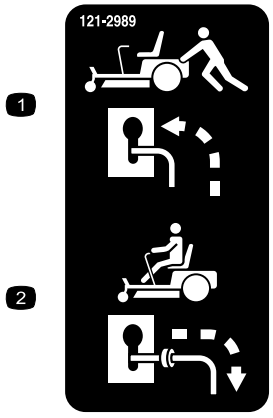

121-2989

1. Bypass lever position for pushing the machine
2. Bypass lever position for operating the machine



Battery Symbols

Some or all of these symbols are on your battery

1. Explosion hazard
2. No fire, open flame, or smoking.
3. Caustic liquid/chemical burn hazard
4. Wear eye protection
5. Read the *Operator's Manual.*
6. Keep bystanders a safe distance from the battery.
7. Wear eye protection; explosive gases can cause blindness and other injuries
8. Battery acid can cause blindness or severe burns.
9. Flush eyes immediately with water and get medical help fast.
10. Contains lead; do not discard.

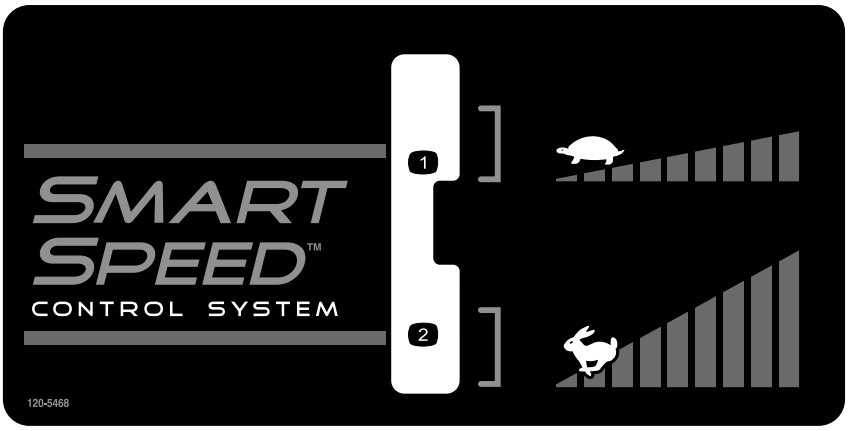

120-5468

1. Slow speed
2. Fast speed

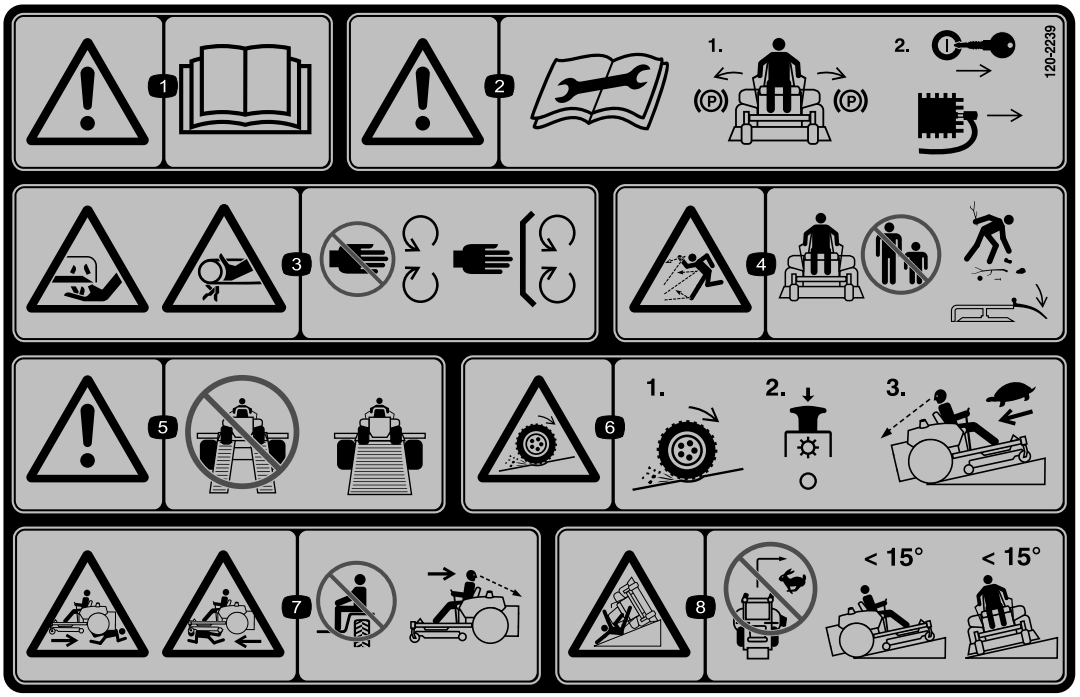

120-2239

1. Warning—read the *Operator's Manual*.
2. Warning—read the instructions before servicing or performing maintenance; move the motion control levers to the park (brake) position, remove the ignition key and disconnect the spark plug wire.
3. Cutting/dismemberment hazard, mower blade; entanglement hazard, belt—stay away from moving parts, keep all guards and shields in place.
4. Thrown object hazard—keep bystanders a safe distance from the machine, pick up debris before operating, keep deflector in place.
5. Warning—do not use split ramps, use a full ramps when transporting machine.
6. Loss of traction/control hazard, slopes—loss of traction/control on a slope, disengage the blade control switch (PTO), proceed off the slope slowly.
7. Crushing/dismemberment hazard of bystanders, reversing; crushing/dismemberment hazard of bystanders—do not carry passengers, look behind and down when reversing.
8. Tipping hazard—do not mow slopes greater than 15 degrees, avoid sudden and sharp turns while on slopes.

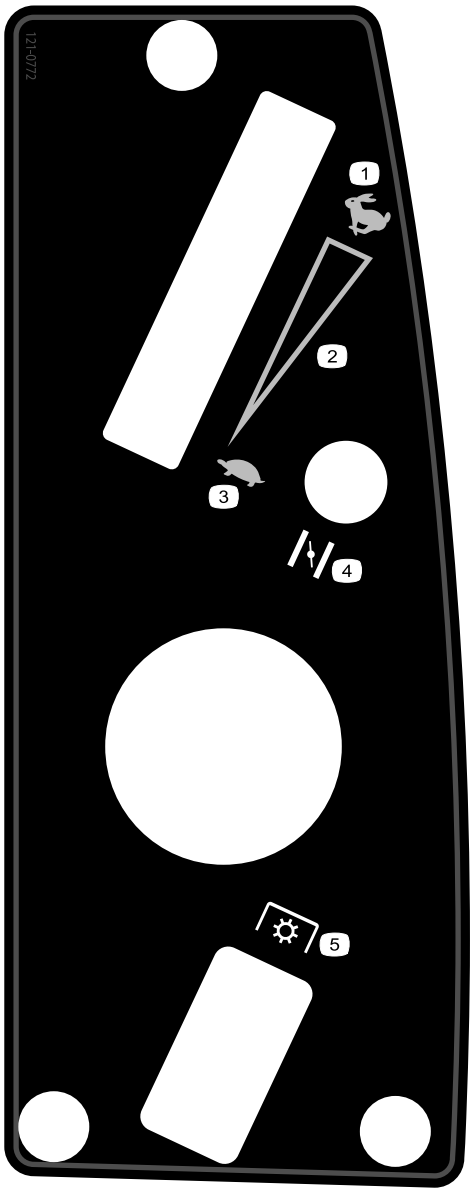

121-0772

1. Fast
2. Continuous variable setting
3. Slow
4. Choke
5. Power take-off (PTO), Blade control switch

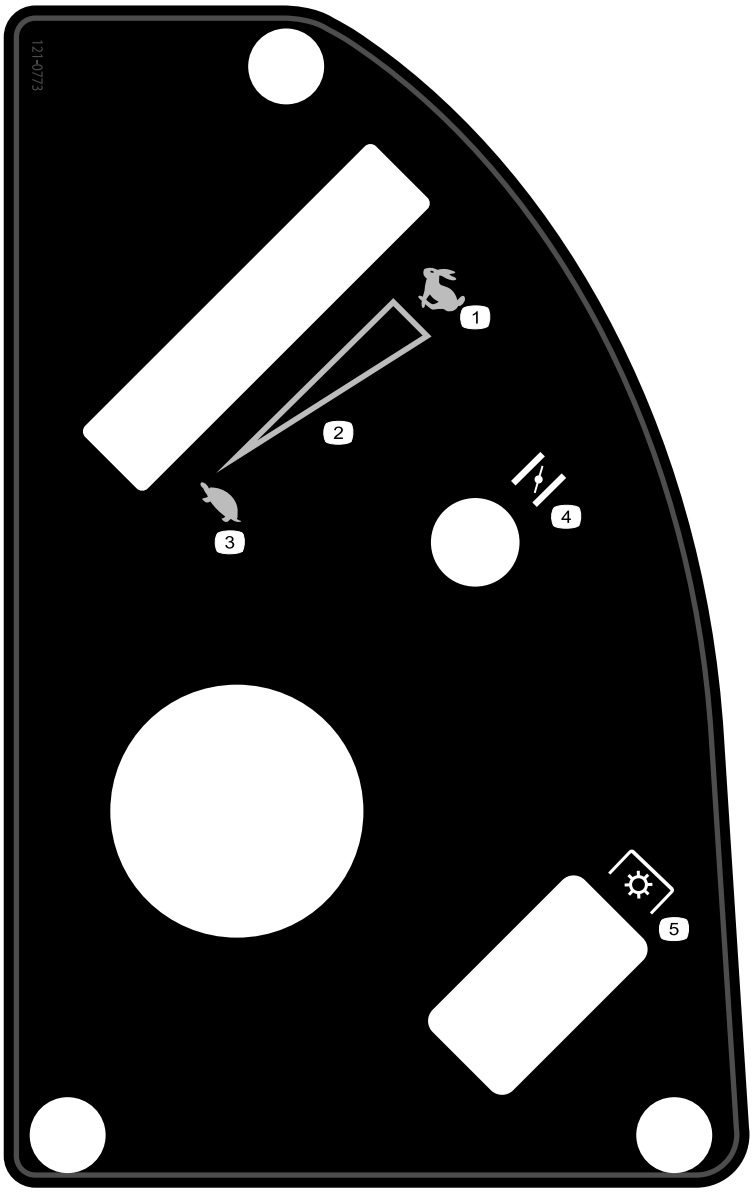

121-0773

1. Fast
2. Continuous variable setting
3. Slow
4. Choke
5. Power take-off (PTO), Blade control switch

Product Overview

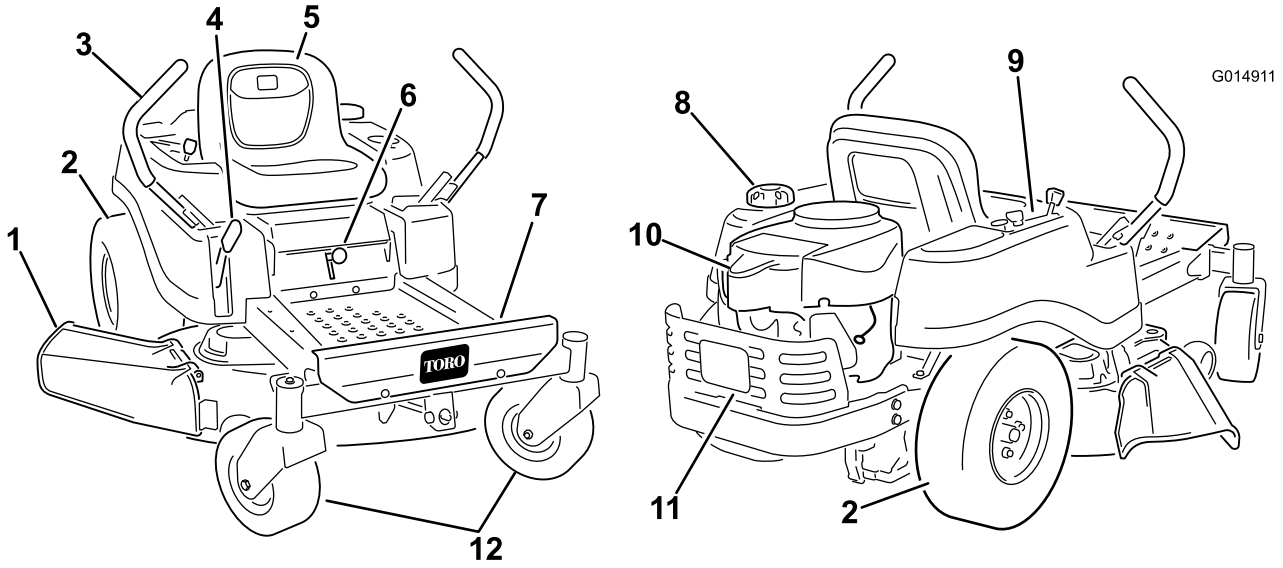

Figure 4

Models with 42 inch decks

1. Deflector
2. Rear drive wheel
3. Motion control levers
4. Height of cut lever
5. Operator seat
6. Smart Speed™ lever
7. Footrest
8. Fuel tank cap
9. Control panel
10. Engine
11. Engine guard
12. Front caster wheel

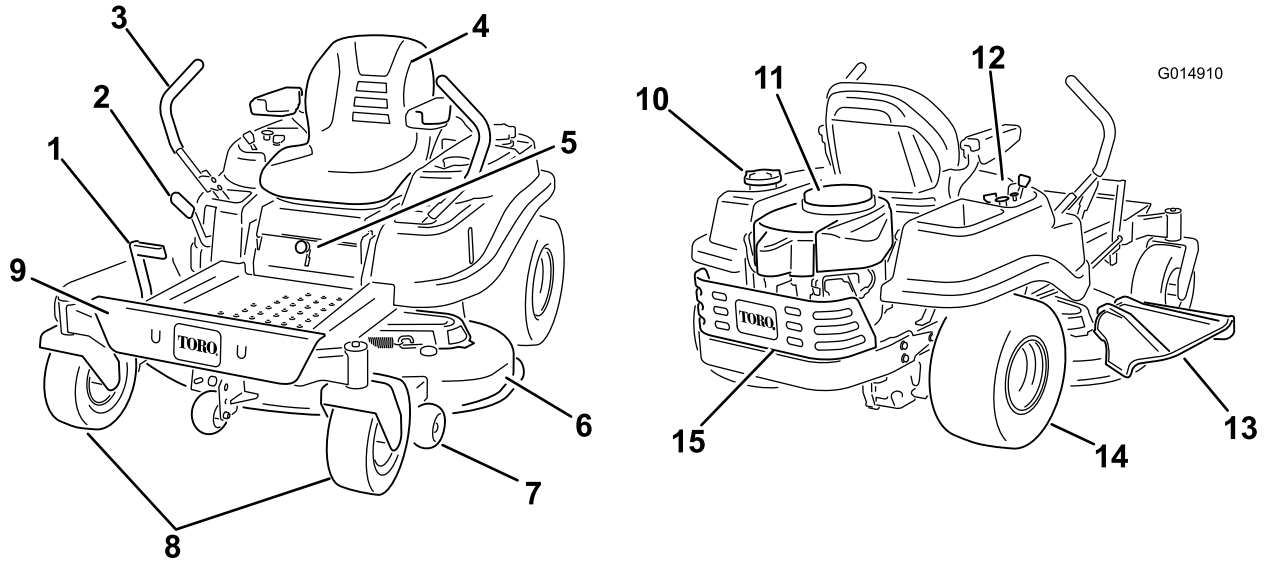

Figure 5

Models with 50 inch decks

1. Foot assist lever
2. Height of cut lever
3. Motion control levers
4. Operator seat (armrests optional)
5. Smart Speed™ lever
6. Mower deck
7. Anti-scalp roller
8. Front caster wheel
9. Footrest
10. Gas tank cap
11. Engine
12. Control panel
13. Deflector
14. Rear drive wheel
15. Engine guard

Controls

Become familiar with all of the controls in Figure 4, Figure 5, and Figure 6 before you start the engine and operate the machine.

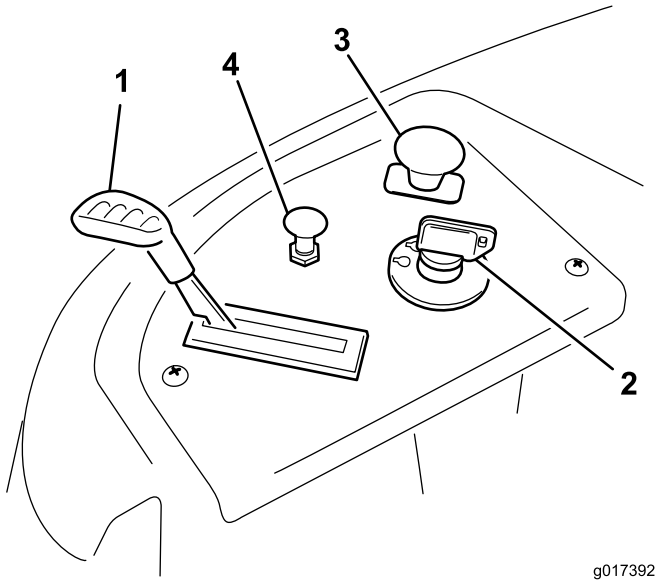

Figure 6

Control Panel

1. Throttle
2. Ignition switch
3. Blade control switch (power take-off)
4. Choke

Ignition Switch

The ignition switch has three positions, Off, Run and Start. The key will turn to Start and move back to Run upon release. Turning the key to the Off position will stop the engine; however, always remove the key when leaving the machine to prevent someone from accidentally starting the engine (Figure 6).

Throttle Control

The throttle controls the engine speed and it has a continuous variable setting from Slow to Fast (Figure 6).

Choke Control

Pull up on the Choke control until it stops to choke the engine (Figure 6). Push down on the Choke control for normal engine operation

Blade Control Switch (Power Take-Off)

The blade control switch, represented by a power take-off (PTO) symbol, engages and disengages power to the mower blades (Figure 6).

Motion Control Levers and Park Position

The motion control levers are speed sensitive controls of independent wheel motors. Moving a lever forward or backward turns the wheel on the same side forward or in reverse; wheel speed is proportional to the amount the lever is moved. Move the control levers outward from the center to the park position and exit the machine (Figure 17). Always position the motion control levers into the park position when you stop the machine or leave it unattended.

Smart Speed™ Control System Lever

The Smart Speed™ Control System lever, located below the operating position, gives the operator a choice to drive the machine at two speed ranges, high and low (Figure 7).

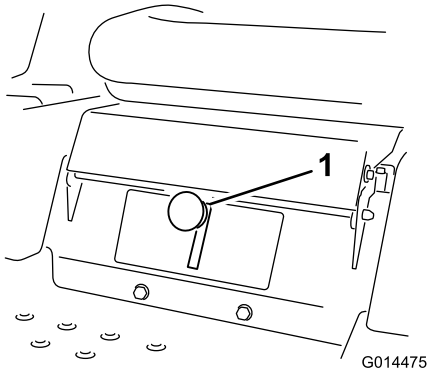

Figure 7

1. Smart speed lever

Fuel Window

The fuel window located on the left hand side of the machine can be used to verify the presence of gasoline in the tank (Figure 8).

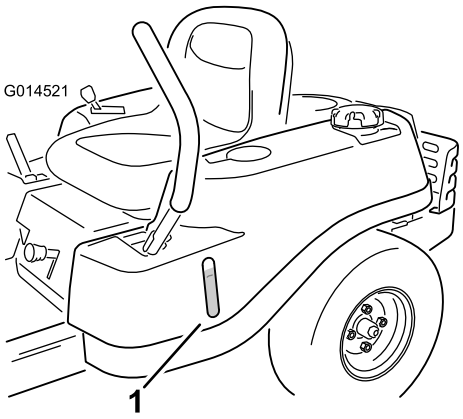

Figure 8

1. Fuel presence window

Height-of-Cut Lever

The height of cut lever allows the operator to lower and raise the deck from the seated position. When the lever is moved up, toward the operator the deck is raised from the ground and when moved down, away from the operator it is lowered toward the ground. Only adjust the height of cut while machine is not moving (Figure 21).

Operation

Note: Determine the left and right sides of the machine from the normal operating position.

Think Safety First

Operating Safety

Please carefully read all of the safety instructions and decals in the safety section. Knowing this information could help you, your family, pets or bystanders avoid injury.

⚠ DANGER

Mowing on wet grass or steep slopes can cause sliding and loss of control.

Wheels dropping over edges can cause rollovers, which may result in serious injury, death or drowning.

A loss of traction is a loss of steering control.

To avoid loss of control and possibility of rollover:

- **Do not mow near drop-offs or near water.**
- **Do not mow slopes greater than 15 degrees.**
- **Reduce speed and use extreme caution on slopes.**
- **When mowing slopes, gradually work from lower to higher areas on the incline.**
- **Avoid sudden turns or rapid speed changes.**
- **Turn up, into an incline when changing directions on slopes. Turning down the slope reduces traction.**
- **Attachments change the handling characteristics of the machine. Use extra caution when using attachments with the machine.**

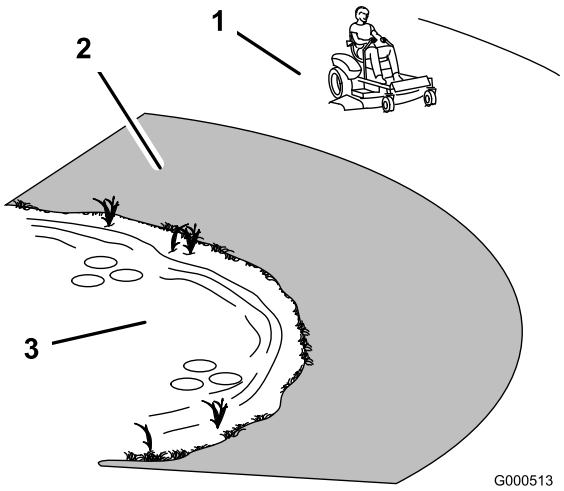

Figure 9

1. Safe Zone-use the TimeCutter here
2. Use walk behind mower and/or hand trimmer near drop-offs and water.
3. Water

Fuel Safety

⚠ DANGER

In certain conditions, gasoline is extremely flammable and highly explosive. A fire or explosion from gasoline can burn you and others and can damage property.

- **Fill the fuel tank outdoors, in an open area, when the engine is cold. Wipe up any gasoline that spills.**
- **Never fill the fuel tank inside an enclosed trailer.**
- **Do not fill the fuel tank completely full. Add gasoline to the fuel tank until the fuel reaches the base of the filler neck. This empty space in the tank allows gasoline to expand.**
- **Never smoke when handling gasoline, and stay away from an open flame or where gasoline fumes may be ignited by a spark.**
- **Store gasoline in an approved container and keep it out of the reach of children. Never buy more than a 30-day supply of gasoline.**
- **Do not operate without entire exhaust system in place and in proper working condition.**

⚠ DANGER

In certain conditions during fueling, static electricity can be released causing a spark which can ignite the gasoline vapors. A fire or explosion from gasoline can burn you and others and can damage property.

- **Always place gasoline containers on the ground away from your vehicle before filling.**
- **Do not fill gasoline containers inside a vehicle or on a truck or trailer bed because interior carpets or plastic truck bed liners may insulate the container and slow the loss of any static charge.**
- **When practical, remove gas-powered equipment from the truck or trailer and refuel the equipment with its wheels on the ground.**
- **If this is not possible, then refuel such equipment on a truck or trailer from a portable container, rather than from a gasoline dispenser nozzle.**
- **If a gasoline dispenser nozzle must be used, keep the nozzle in contact with the rim of the fuel tank or container opening at all times until fueling is complete.**

⚠ WARNING

Gasoline is harmful or fatal if swallowed. Long-term exposure to vapors can cause serious injury and illness.

- **Avoid prolonged breathing of vapors.**
- **Keep face away from nozzle and gas tank or conditioner opening.**
- **Keep gas away from eyes and skin.**

Understanding the Safety Interlock System

⚠ WARNING

If safety interlock switches are disconnected or damaged the machine could operate unexpectedly causing personal injury.

- **Do not tamper with the interlock switches.**
- **Check the operation of the interlock switches daily and replace any damaged switches before operating the machine.**

The safety interlock system is designed to prevent the engine from starting unless:

- The blades are disengaged.
- The motion control levers are in the park position.

The safety interlock system also is designed to stop the engine whenever the control levers are out of the park position and you rise from the seat.

Before Starting

Recommended Fuel

1. For best results, use only clean, fresh, unleaded gasoline with an octane rating of 87 or higher ((R+M)/2 rating method).
2. Oxygenated fuel with up to 10% ethanol or 15% MTBE by volume is acceptable.
3. **Do Not** use ethanol blends of gasoline (such as E15 or E85) with more than 10% ethanol by volume. Performance problems and/or engine damage may result which may not be covered under warranty.
4. **Do Not** use gasoline containing methanol.
5. **Do Not** store fuel either in the fuel tank or fuel containers over the winter unless a fuel stabilizer is used.
6. **Do Not** add oil to gasoline.

Using Stabilizer/Conditioner

Use a fuel stabilizer/conditioner in the machine to provide the following benefits:

- Keeps gasoline fresh during storage of 90 days or less. For longer storage it is recommended that the fuel tank be drained.
- Cleans the engine while it runs.
- Eliminates gum-like varnish buildup in the fuel system, which causes hard starting.

Add the correct amount of gas stabilizer/conditioner to the gas.

Note: A fuel stabilizer/conditioner is most effective when mixed with fresh gasoline. To minimize the chance of varnish deposits in the fuel system, use fuel stabilizer at all times.

Filling the Fuel Tank

Make sure the engine is shut off and the motion controls are in the park position. Tank maximum capacity is 2.9 gallons.

Important: Do Not overfill fuel tank. Fill the fuel tank to the bottom of the filler neck. The empty space in the tank allows the fuel to expand. Overfilling may result in fuel leakage or damage to the engine or emissions system.

1. Clean around the fuel tank cap and remove the cap.

   Note: You can use the fuel window to verify the presence of gasoline before filling the tank (Figure 10).

2. **Slowly** add regular, unleaded gasoline until the fuel reaches the base of the filler neck (Figure 10).

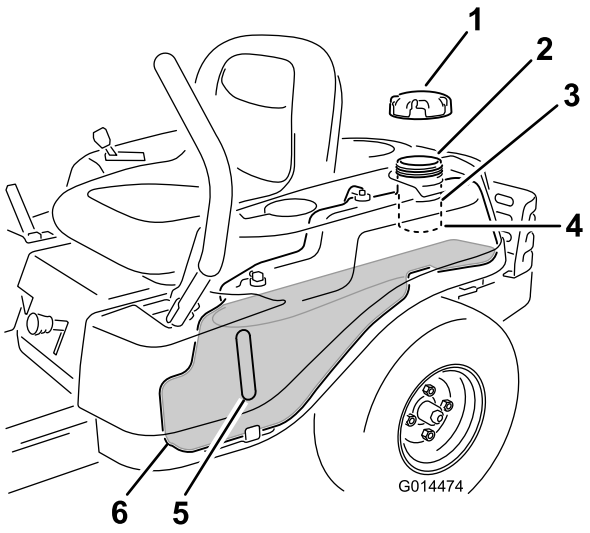

Figure 10

1. Fuel tank cap
2. Fill opening
3. Filler neck
4. Base of filler neck, **DO NOT FILL PAST HERE**
5. Fuel window

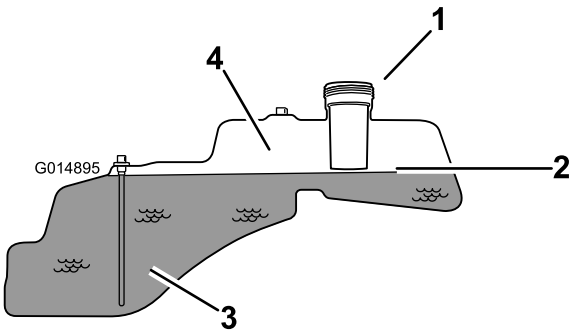

Figure 11

1. Fill opening
2. Base of filler neck, **DO NOT FILL PAST HERE**
3. Fuel
4. Empty space for fuel expansion.

Important: Do Not overfill fuel tank. Fill the fuel tank to the bottom of the filler neck. The empty space in the tank allows the fuel to expand. Overfilling may result in fuel leakage or damage to the engine.

3. Install the fuel tank cap securely and tighten until it "clicks". Wipe up any gasoline that may have spilled.

Checking the Engine Oil Level

Before you start the engine and use the machine, check the oil level in the engine crankcase; refer to Checking the Oil Level in the Engine Maintenance section.

Starting the Engine

1. Sit down on the seat and move the motion controls outward to the park position.
2. Disengage the blades by moving the blade control switch to Off (Figure 12)

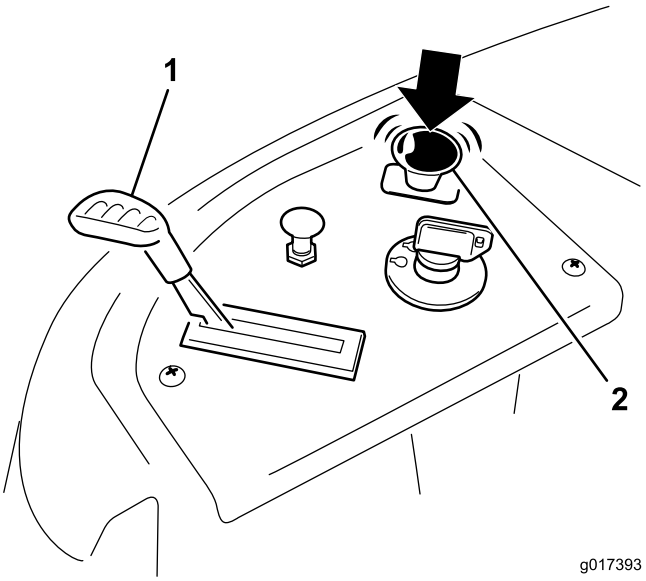

Figure 12

1. Control panel
2. Blade control switch—Off position

3. Pull up on the Choke control before starting a cold engine (Figure 13).

   Note: A warm or hot engine may not require choking.

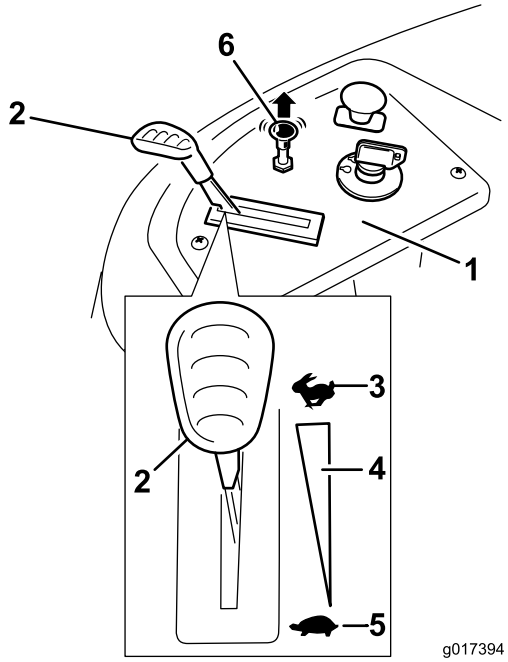

Figure 13

1. Control panel
2. Throttle
3. Fast
4. Continuous variable setting
5. Slow
6. Choke control

4. Turn the ignition key to Start to energize the starter. When the engine starts, release the key (Figure 14).

   Important: Do not engage the starter for more than 10 seconds at a time. If the engine fails to start, allow a 60 second cool-down period between attempts. Failure to follow these instructions can damage the starter motor.

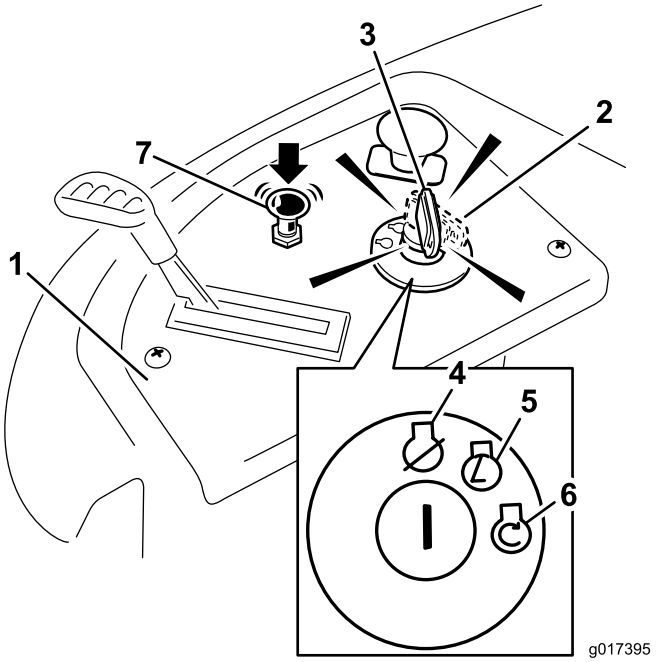

Figure 14

1. Control panel
2. Ignition key—run position
3. Ignition key—start position
4. Off
5. Run
6. Start
7. Choke control

5. After the engine starts, push down on the Choke control (Figure 14). If the engine stalls or hesitates, pull up on the Choke control and let the engine run for a few seconds. Then push down on the Choke control. Repeat this as required.

Operating the Blades

The blade control switch, represented by a power take-off (PTO) symbol, engages and disengages power to the mower blades. This switch controls power to any attachments that draw power from the engine, including the mower deck and cutting blades.

Engaging the Blades

Important: Do not engage the blades when parked in tall grass. Belt or clutch damage can occur.

1. Release pressure on the motion control levers and place the machine in neutral.
2. Move the throttle to the Fast position.

   Note: Always engage the blades with the throttle in the Fast position.
3. Pull up on the blade control switch to move it to the On position and engage the blades (Figure 15).

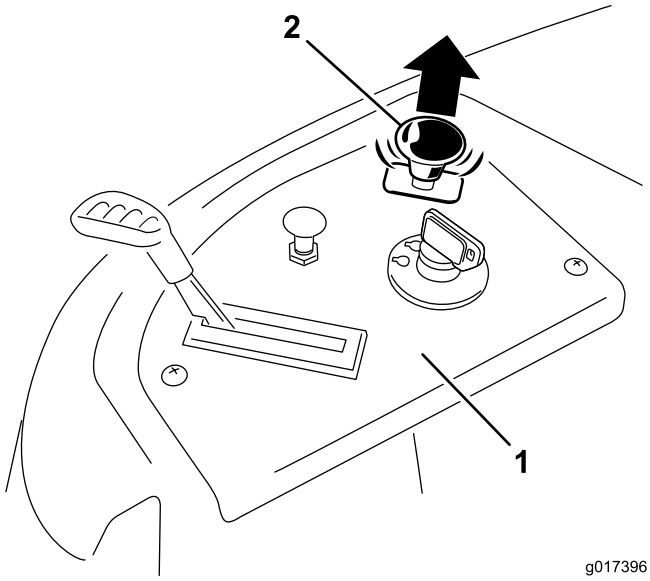

Figure 15

1. Control panel
2. Blade control switch—On position

Disengaging the Blades

Push down on the blade control switch to move it to the Off position and disengage the blades (Figure 16).

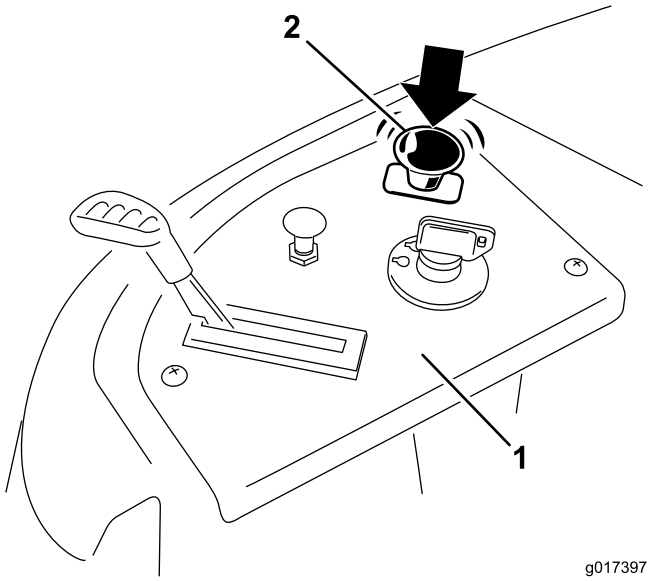

Figure 16

1. Control panel
2. Blade control switch—Off

Testing the Safety Interlock System

Test the safety interlock system before you use the machine each time. If the safety system does not operate as described below, have an Authorized Service Dealer repair the safety system immediately.

1. While sitting on the seat, with the control levers in park position, and move the blade control switch to On. Try starting the engine; the engine should not crank.
2. While sitting on the seat, move the blade control switch to Off. Move either motion control lever to the center, unlocked position. Try starting the engine; the engine should not crank. Repeat with the other motion control lever.
3. While sitting on the seat, move the blade control switch to Off, and lock the motion control levers in the park position. Start the engine. While the engine is running, engage the blade control switch, and rise slightly from the seat; the engine should stop.
4. While sitting on the seat, move the blade control switch to Off, and lock the motion control levers in the park position. Start the engine. While the engine is running, move the motion control levers to the center, unlocked position, engage the blade control switch, and rise slightly from the seat; the engine should stop.

Stopping the Engine

1. Disengage the blades by moving the blade control switch to Off (Figure 16).
2. Move the throttle lever to Fast (Figure 13).
3. Turn the ignition key to Off (Figure 14) and remove the key.

Driving

Driving the machine benefits from an understanding of what zero turn radius mower means. The drive wheels turn independently, powered by hydraulic motors on each axle; hence one side can turn in reverse while the other turns forward causing the machine to spin rather than turn. This vastly improves the machine maneuverability but may require some adjustment if the operator is unfamiliar.

⚠ WARNING

The machine can spin very rapidly. The operator may lose control of the machine and cause personal injury or damage to the machine.

- **Use caution when making turns.**
- **Slow the machine down before making sharp turns.**

The throttle control regulates the engine speed as measured in rpm (revolutions per minute). Placing the throttle control in the Fast position can be best for performance. For most applications, operating in the full throttle position is desirable.

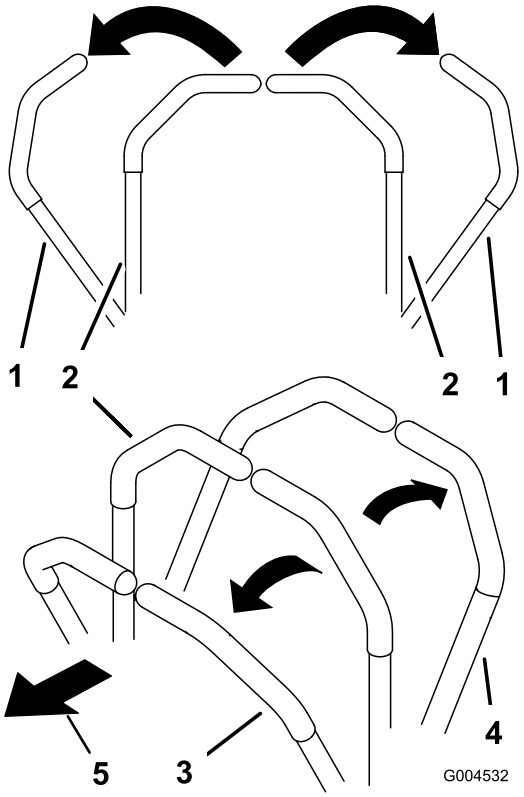

Figure 17

1. Park (brake) position
2. Center unlock position
3. Forward
4. Backward

Using the Smart Speed™ Control System

The Smart Speed™ Control System lever, located below the operating position (), gives the operator a choice to drive the machine at two ground speed ranges, high and low.

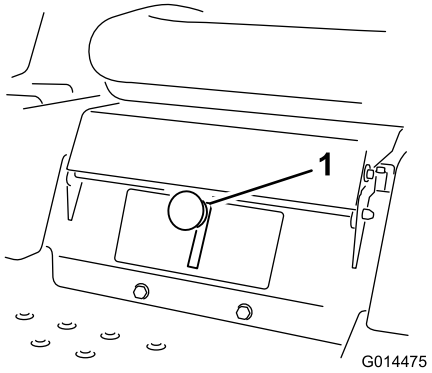

Figure 18

1. Smart speed lever

To change speeds:

1. Move the motion control levers to neutral and outward to the park position; disengage the blade control switch.

⚠ WARNING

Removing your hands from the motion control levers while the machine is in motion can result in a loss of control causing harm to you or bystanders.

Always stop the machine and move the motion control levers to the park position before adjusting the Smart Speed™ Control System.

2. Adjust the lever to the desired position.

Forward

1. Move the levers to the center, unlocked position.
2. To go forward, slowly push the motion control levers forward (Figure 17).

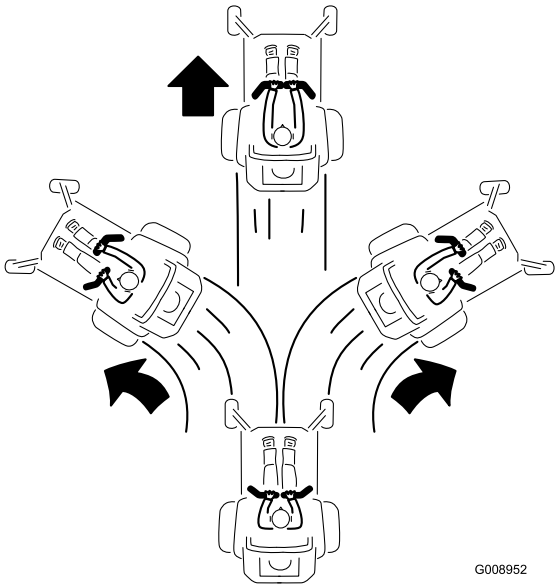

Figure 19

To go straight, apply equal pressure to both motion control levers (Figure 17).

To turn, release pressure on the motion control lever toward the direction you want to turn (Figure 17).

The farther you move the motion control levers in either direction, the faster the machine will move in that direction.

To stop, pull the motion control levers to neutral.

Backward

1. Move the levers to the center, unlocked position.
2. To go backward, look behind you and down as you slowly pull the motion control levers rearward (Figure 20).

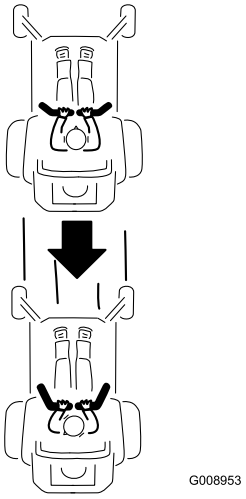

Figure 20

To go straight, apply equal pressure to both motion control levers (Figure 20).

To turn, release the pressure on the motion control lever toward the direction you want to turn.

To stop, push the motion control levers to neutral.

Stopping the Machine

To stop the machine, move the motion control levers to neutral and outward to the park position, disengage the blade control switch, ensure the throttle is in the fast position, and turn the ignition key to off. Remember to remove the key from the ignition switch.

⚠ WARNING

Children or bystanders may be injured if they move or attempt to operate the mower while it is unattended.

Always remove the ignition key and move the motion control levers outward to the park position when leaving the machine unattended, even if just for a few minutes.

Adjusting the Height of Cut

Height-of-cut is controlled by the lever located to the right of the operating position (Figure 21).

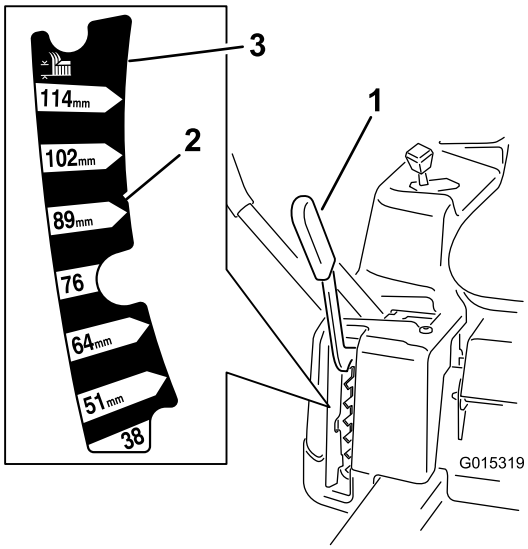

Figure 21

1. Height-of-cut lever
2. Height-of-cut positions
3. 115 mm (4.5 inch), Transport position

1. Pull up and inward on the lever to move it to the desired cutting position.
2. Once at the desired cutting position, slowly lower the lever until it engages the position.

The transport position is the highest height-of-cut position or cutting height **115** inch [4.5 mm] (Figure 21).

Adjusting the Anti-Scalp Rollers (For 42 inch Mower Decks)

Whenever you change the height-of-cut, it is recommended to adjust the height of the anti-scalp rollers.

Note: Adjust the anti-scalp rollers so the rollers do not touch the ground in normal, flat mowing areas.

1. Disengage the blade control switch (PTO), move the motion control levers to the neutral lock position and set the parking brake.
2. Stop the engine, remove the key, and wait for all moving parts to stop before leaving the operating position.
3. Adjust the anti-scalp rollers to one of the following positions:
   - Upper hole—use this position with the mower deck in the 63mm (2-1/2 inch) and below height-of-cut positions (Figure 22).
   - Lower hole—use this position with the mower deck in the 76mm (3 inch) and above height-of-cut positions (Figure 22).

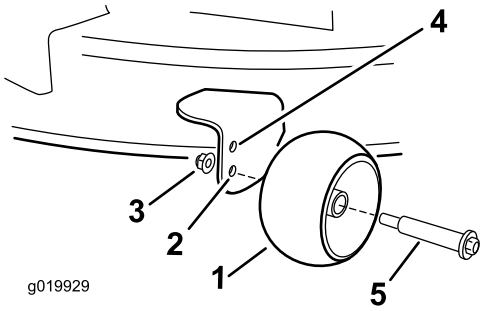

Figure 22

1. Anti-scalp roller
2. Lower hole—the mower deck in the 76mm (3 inch) and above height-of-cut positions
3. Flange Nut
4. Upper hole—the mower deck in the 63mm (2-1/2 inch) and below height-of-cut positions
5. Bolt

Adjusting the Anti-Scalp Rollers (For 50 inch Mower Decks)

Whenever you change the height-of-cut, it is recommended to adjust the height of the anti-scalp rollers.

Note: Adjust the anti-scalp rollers so the rollers do not touch the ground in normal, flat mowing areas.

1. Disengage the blade control switch (PTO), move the motion control levers to the neutral lock position and set the parking brake.
2. Stop the engine, remove the key, and wait for all moving parts to stop before leaving the operating position.
3. Adjust the anti-scalp rollers as shown in Figure 23 to match the closest height-of-cut position.

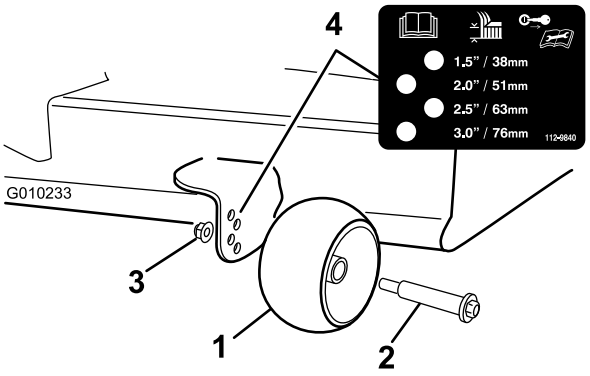

Figure 23

1. Anti-scalp roller
2. Bolt
3. Flange Nut
4. Hole spacing

Positioning the Seat

The seat can move forward and backward. Position the seat where you have the best control of the machine and are most comfortable.

Models with 42 inch Decks

1. Raise the seat and loosen the adjustment bolts just enough that seat can move (Figure 24).

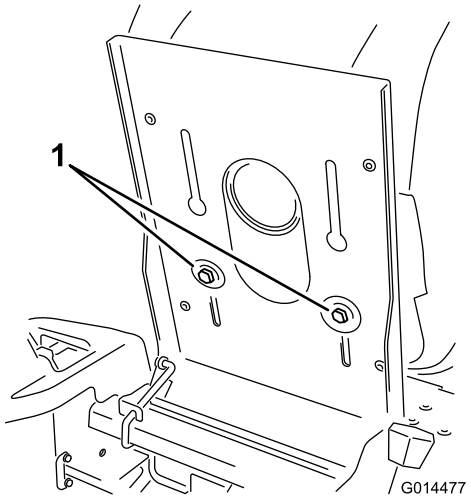

Figure 24

1. Adjustment bolt

2. Move the seat to the desired position and tighten the bolts.

Models with 50 inch Decks

While sitting in the operator's position, raise the seat adjustment lever slightly and move the seat forward or backward to the desired position (Figure 25).

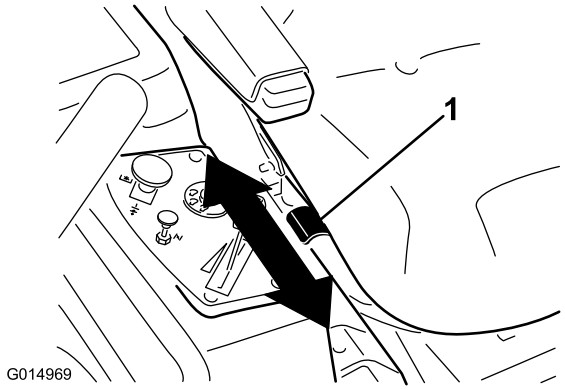

Figure 25

Adjusting the Motion Control Levers

Adjusting the Height

The motion control levers can be adjusted higher or lower for maximum operator comfort.

1. Remove the 2 bolts holding the control lever to the control arm shaft (Figure 26).
2. Move the control lever to the next set of holes. Secure the lever with the 2 bolts (Figure 26).

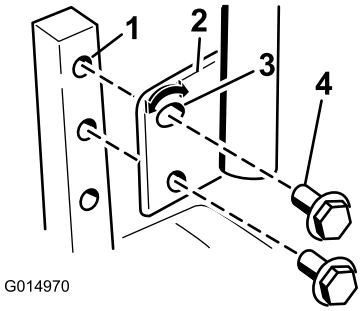

Figure 26

1. Control arm shaft
2. Control lever
3. Slotted, upper hole
4. Bolt

3. Repeat the adjustment for the opposite control lever.

Adjusting the Tilt

The motion control levers can be tilted fore or aft for maximum operator comfort.

1. Loosen the upper bolt holding the control lever to the control arm shaft.
2. Loosen the lower bolt just enough to pivot the control lever fore or aft (Figure 26). Tighten both bolts to secure the control in the new position.
3. Repeat the adjustment for the opposite control lever.

Pushing the Machine by Hand

Important: Always push the machine by hand. Never tow the machine because damage may occur.

This machine has an electric brake mechanism and to push the machine the ignition key needs to be in the Run position. The battery needs to be charged and functioning for the electric brake to be disengage.

To Push the Machine

1. Park the machine on a level surface and disengage the blade control switch.
2. Move the motion control levers outward to park position, stop the engine, and wait for all moving parts to stop before leaving the operating position.
3. Locate the bypass levers on the frame on both sides of the engine.
4. Move the bypass levers forward through the key hole and down to lock them in place as shown in Figure 23Figure 27. Ensure this is done for each lever.
5. Move the motion control levers inward to the neutral position and turn the ignition key to the run position. Do not start the machine.

   The machine is now able to be pushed by hand.

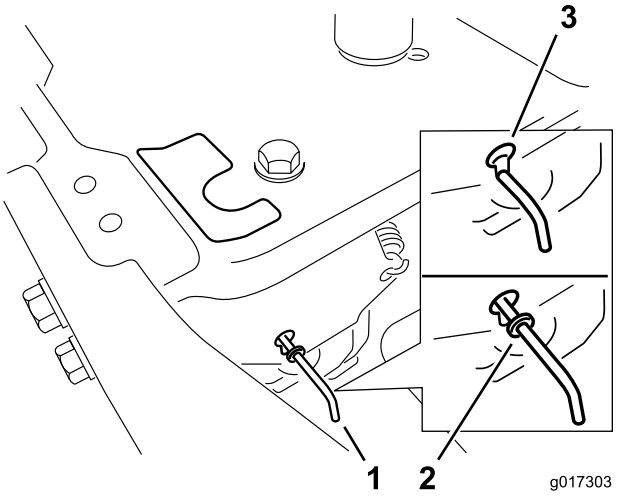

Figure 27

1. Bypass lever locations
2. Lever position for operating the machine
3. Lever position for pushing the machine

6. When finished, ensure the key has been returned to the Stop position to avoid draining the battery charge.

If the machine fails to move the electric brake may still be engaged. If necessary the electric brake can be released manually. Refer to the Releasing the Electric Brake (page 39) procedure in Drive Maintenance.

To Operate the Machine

Move the bypass levers rearward through the key hole and down to lock them in place as shown in Figure 27. Ensure this is done for each lever.

Grass Deflector

The mower has a hinged grass deflector that disperses clippings to the side and down toward the turf.

⚠ DANGER

Without the grass deflector, discharge cover, or complete grass catcher assembly mounted in place, you and others are exposed to blade contact and thrown debris. Contact with rotating mower blade(s) and thrown debris will cause injury or death.

- **Never remove the grass deflector from the mower because the grass deflector routes material down toward the turf. If the grass deflector is ever damaged, replace it immediately.**
- **Never put your hands or feet under the mower.**
- **Never try to clear discharge area or mower blades unless you move the blade control switch to Off and rotate the ignition key to Off. Also remove the key and pull the wire off the spark plug(s).**

Converting to Side Discharge (For Models with 42 Inch Decks)

The mower deck and mower blades shipped with this machine were designed for optimum mulching and side discharge performance.

Removing the Discharge Cover for Side Discharge

1. Park the machine on a level surface and disengage the blade control switch.
2. Move the motion control levers outward to park position, stop the engine, remove the key, and wait for all moving parts to stop before leaving the operating position.
3. Remove the 2 bolts and nuts that secure the discharge cover to the mower (Figure 28).

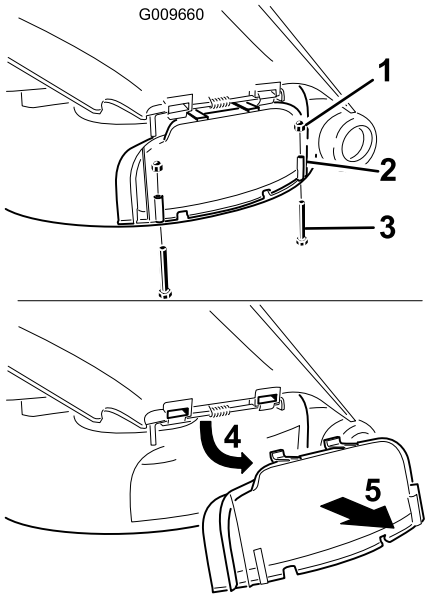

Figure 28

1. Cap nut (1/4 inch)
2. Discharge cover
3. Bolt (1/4 x 2-1/2 inches)
4. Rotate the cover up
5. Remove the cover

4. Remove the discharge cover.
5. Lift up the grass deflector and locate the lock nut on the deflector pivot rod. Remove the existing thin nut (3/8 inch).
6. Install the cutoff baffle to the exposed pivot rod (Figure 29). Use the existing thin nut (3/8 inch) to secure the baffle to the mower.

   Note: The cutoff baffle was shipped with the machine as a loose part.

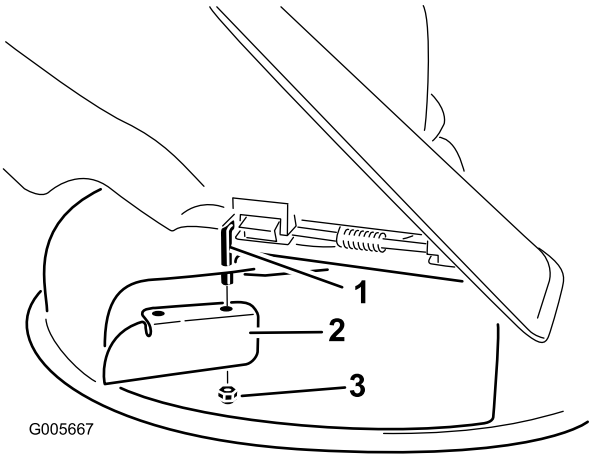

Figure 29

1. Pivot rod
2. Cutoff baffle (originally shipped with the machine)
3. Existing thin nut (3/8 inch)

7. Torque the fastener to 14-18 ft-lb (7-9 N-m).
8. Lower the grass deflector over the discharge opening

Important: Ensure the mower has a hinged grass deflector that disperses clippings to the side and down toward the turf, while in side discharge mode.

Installing the Discharge Cover for Mulching

1. Park the machine on a level surface and disengage the blade control switch.
2. Move the motion control levers outward to park position, stop the engine, remove the key, and wait for all moving parts to stop before leaving the operating position.
3. Lift the grass deflector and slide the tabs on top of the discharge cover under the grass deflector retaining rod. Rotate the discharge cover down over the opening, and onto the lower lip of the mower (Figure 30).

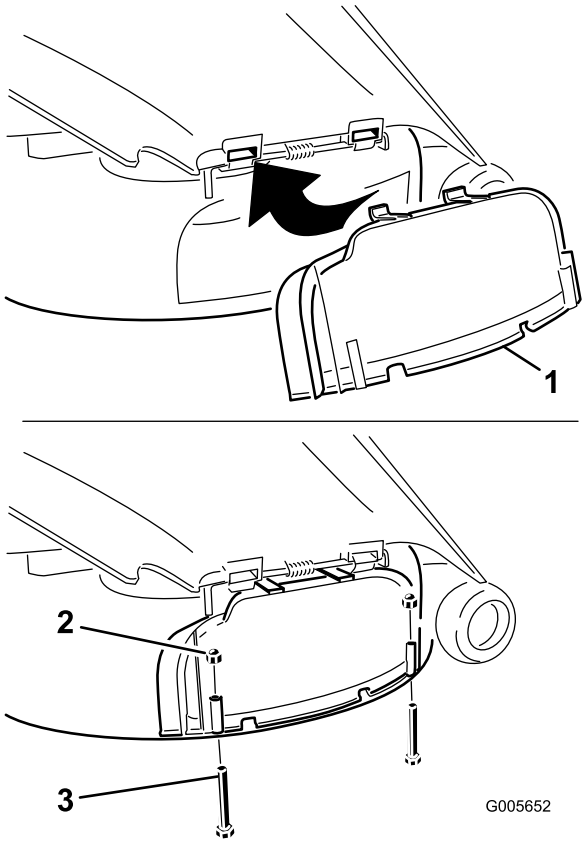

Figure 30

1. Discharge cover
2. Cap nut (1/4 inch)
3. Bolt (1/4 x 2-1/2 inches)

4. Secure the discharge cover to the lower lip of the mower with two bolts (1/4 x 2-1/2 inches) and two cap nuts (1/4 inch) as shown in Figure 30.

   Note: Do not overtighten the nuts; this could distort the cover and cause blade contact.

Converting to Side Discharge (For Models with 50 Inch Decks)

The mower deck and mower blades shipped with this machine were designed for optimum mulching and side discharge performance.

Removing the Right Baffle for Side Discharge

1. Park the machine on a level surface and disengage the blade control switch.
2. Move the motion control levers outward to park position, stop the engine, remove the key, and wait for all moving parts to stop before leaving the operating position.
3. Remove the right mower blade. Refer to the Mower Maintenance section.
4. Remove the 2 knobs and curved washers that secure the right baffle to the mower as shown in Figure 31.

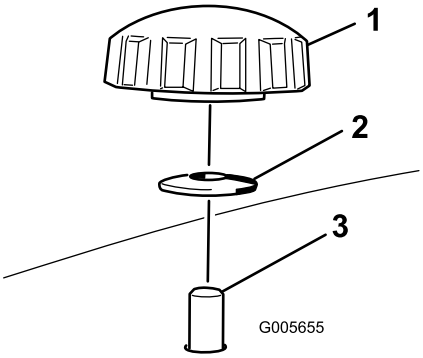

Figure 31

1. Knob
2. Curved washer
3. Baffle stud coming through the mower

5. Remove the right baffle and lower the grass deflector over the discharge opening as shown in Figure 32 and Figure 31.

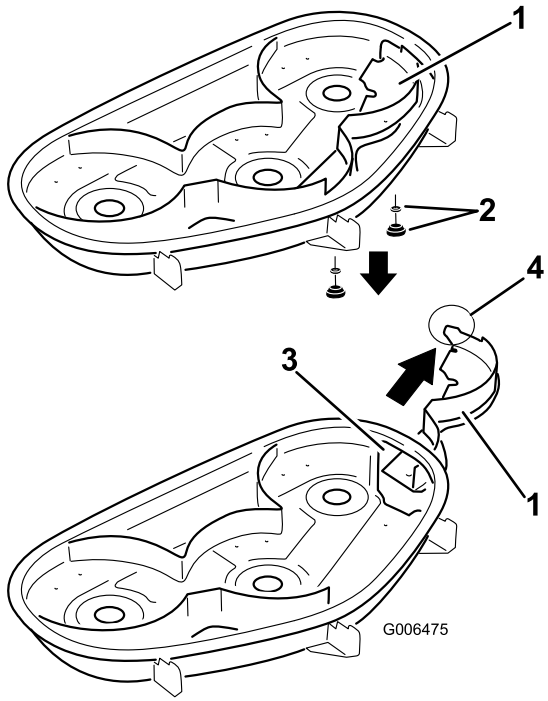

Figure 32

1. Right baffle
2. Curved washer and knob
3. Discharge opening
4. Tab (must remain outside of the mower)

6. Install fasteners into the holes in the top of the mower to prevent flying debris.

⚠ WARNING

Open holes in the mower expose you and others to thrown debris which can cause severe injury.

- **Never operate the mower without hardware mounted in all holes in the mower housing.**
- **Install the hardware in the mounting holes when you remove the mulching baffle.**

7. Install the right mower blade. Refer to the Mower Maintenance section.
8. Lift up the grass deflector. Install two bolts (5/16 x 3/4 inch) to the two holes along the deck cutout.
9. Install the cutoff baffle to the mower deck Figure 33. Use the two lock nuts (5/16 inch) to secure the baffle to the mower deck.

   Note: The cutoff baffle was shipped with the machine as a loose part.

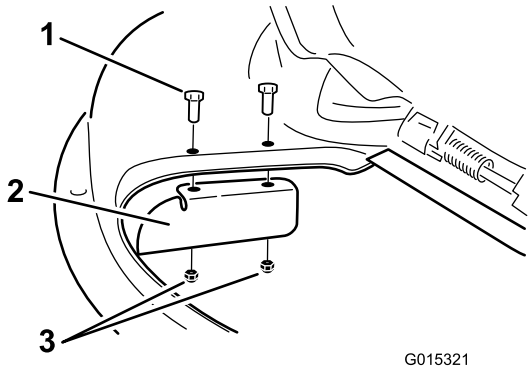

Figure 33

1. Bolt (5/16 x 3/4 inch)
2. Cutoff baffle
3. Lock nut (5/16 inch)

10. Torque the fasteners to 14-18 ft-lb (7-9 N-m).
11. Lower the grass deflector over the discharge opening.

    Important: Ensure the mower has a hinged grass deflector that disperses clippings to the side and down toward the turf, while in side discharge mode.

Installing the Right Baffle for Mulching

1. Park the machine on a level surface and disengage the blade control switch.
2. Move the motion control levers outward to park position, stop the engine, remove the key, and wait for all moving parts to stop before leaving the operating position.
3. Remove the cutoff baffle from the mower deck (Figure 33).
4. Remove the right mower blade. Refer to the Mower Maintenance section.
5. Slide the right baffle under the mower deck and secure it using 2 knobs and curved washers (cupped side facing the mower) as shown in Figure 31 and Figure 32.

   Important: Ensure that the tab on the far right side of the right baffle is outside of the mower and is flush with the mower wall.

6. Install the right mower blade. Refer to the Mower Maintenance section.

Operating Tips

Fast Throttle Setting

For best mowing and maximum air circulation, operate the engine at the Fast position. Air is required to thoroughly cut grass clippings, so do not set the height-of-cut so low as to totally surround the mower by uncut grass. Always try to have one side of the mower free from uncut grass, which allows air to be drawn into the mower.

Using the Smart Speed™ Control System

The Smart Speed™ Control System lever, located below the operating position, gives the operator a choice to drive the machine at two speed ranges, high and low. An operator can benefit from the lower speed setting when maneuvering the machine in tight spaces or operating around delicate landscapes. The low setting can also be used to operate the machine at a high throttle setting and blade speed while still being able to reduce ground speed to increase quality of cut.

Cutting a Lawn for the First Time

Cut grass slightly longer than normal to ensure that the cutting height of the mower does not scalp any uneven ground. However, the cutting height used in the past is generally the best one to use. When cutting grass longer than six inches tall, you may want to cut the lawn twice to ensure an acceptable quality of cut.

Cut 1/3 of the Grass Blade

It is best to cut only about 1/3 of the grass blade. Cutting more than that is not recommended unless grass is sparse, or it is late fall when grass grows more slowly.

Mowing Direction

Alternate mowing direction to keep the grass standing straight. This also helps disperse clippings which enhances decomposition and fertilization.

Mow at Correct Intervals

Normally, mow every four days. But remember, grass grows at different rates at different times. So to maintain the same cutting height, which is a good practice, mow more often in early spring. As the grass growth rate slows in mid summer, mow less frequently. If you cannot mow for an extended period, first mow at a high cutting height; then mow again two days later at a lower height setting.

Avoid Cutting Too Low

If the cutting width of the mower is wider than the mower you previously used, raise the cutting height to ensure that uneven turf is not cut too short.

Long Grass

If the grass is ever allowed to grow slightly longer than normal, or if it contains a high degree of moisture, raise the cutting height higher than usual and cut the grass at this setting. Then cut the grass again using the lower, normal setting.

When Stopping

If the machine's forward motion must be stopped while mowing, a clump of grass clippings may drop onto your lawn. To avoid this, move onto a previously cut area with the blades engaged or you can disengage the mower deck while moving forward.

Keep the Underside of the Mower Clean

Clean clippings and dirt from the underside of the mower after each use. If grass and dirt build up inside the mower, cutting quality will eventually become unsatisfactory.

Blade Maintenance

Maintain a sharp blade throughout the cutting season because a sharp blade cuts cleanly without tearing or shredding the grass blades. Tearing and shredding turns grass brown at the edges, which slows growth and increases the chance of disease. Check the mower blades after each use for sharpness, and for any wear or damage. File down any nicks and sharpen the blades as necessary. If a blade is damaged or worn, replace it immediately with a genuine Toro replacement blade.

Maintenance

Note: Determine the left and right sides of the machine from the normal operating position.

Recommended Maintenance Schedule(s)

Maintenance Service Interval	Maintenance Procedure
After the first 8 hours	• Change the engine oil.
Before each use or daily	• Check the safety interlock system. • Check the engine oil level. • Clean the air intake screen. • Check the cutting blades. • Inspect the grass deflector for damage
After each use	• Clean the mower deck housing.
Every 25 hours	• Grease all lubrication points. • Check tire pressure. • Check the belts for wear/cracks.
Every 100 hours	• Service the paper element. (more often in dusty, dirty conditions) • Change the engine oil. (more often in dusty, dirty conditions) • Check the spark plug(s). • Replace the in-line fuel filter
Every 200 hours	• Replace the paper element. (more often in dusty, dirty conditions) • Change the oil filter. (more often in dusty, dirty conditions)
Before storage	• Charge the battery and disconnect battery cables. • Perform all maintenance procedures listed above before storage. • Paint any chipped surfaces.

Important: **Refer to your engine operator's manual for additional maintenance procedures.**

⚠ CAUTION

If you leave the key in the ignition switch, someone could accidently start the engine and seriously injure you or other bystanders.

Remove the key from the ignition and disconnect the wire from the spark plug before you do any maintenance. Set the wire aside so that it does not accidentally contact the spark plug.

Premaintenance Procedures

Raising the Seat

Make sure the motion control levers are locked in the park position. Lift the seat forward.

The following components can be accessed by raising the seat:

- Serial plate
- Service decal
- Seat adjustment bolts
- Fuel filter
- Battery and battery cables

Lubrication

Greasing the Bearings

Service Interval: Every 25 hours—Grease all lubrication points.

Grease Type: No. 2 General Purpose Lithium Base Grease

1. Park the machine on a level surface and disengage the blade control switch.
2. Move the motion control levers outward to the park position, stop the engine, remove the key, and wait for all moving parts to stop before leaving the operating position.
3. Clean the grease fittings (Figure 34 and Figure 35) with a rag. Make sure to scrape any paint off of the front of the fitting(s).

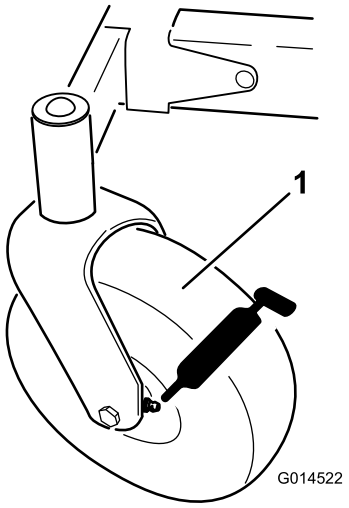

Figure 34

1. Front caster tire

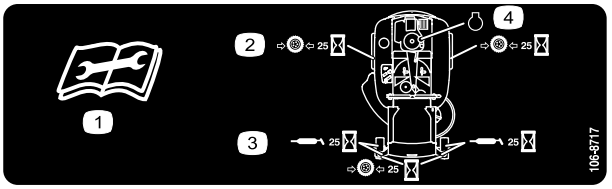

Figure 35

Located on the seat pan underside

1. Read the instructions before servicing or performing maintenance.
2. Check tire pressure every 25 operating hours.
3. Grease every 25 operating hours.
4. Engine

4. Connect a grease gun to each fitting (Figure 34 and Figure 35). Pump grease into the fittings until grease begins to ooze out of the bearings.
5. Wipe up any excess grease.

Engine Maintenance

Servicing the Air Cleaner

Note: Service the air cleaner more frequently (every few hours) if operating conditions are extremely dusty or sandy.

Removing the Element

1. Park the machine on a level surface and disengage the blade control (PTO).
2. Move the motion control levers to the brake position, stop the engine, remove the key, and wait for all moving parts to stop before leaving the operating position.
3. Clean around the air cleaner cover to prevent dirt from getting into the engine and causing damage. Lift the cover and remove the hose clamp securing the air cleaner assembly to the engine (Figure 36).
4. Loosen the hose clamp and remove the paper element (Figure 36).

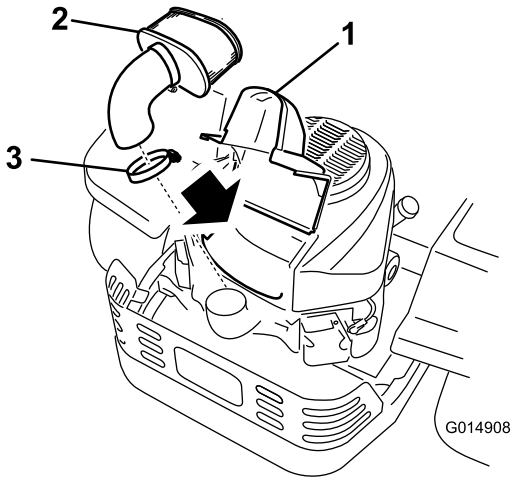

Figure 36

1. Cover
2. Paper element
3. Hose clamp

Cleaning the Element

Service Interval: Every 100 hours—Service the paper element. (more often in dusty, dirty conditions)

Every 200 hours/Yearly (whichever comes first)—Replace the paper element. (more often in dusty, dirty conditions)

1. Lightly tap the element on a flat surface to remove dust and dirt.
2. Inspect the element for tears, an oily film, and damage to the seal.

Important: Never clean the paper element with pressurized air or liquids, such as solvent, gas, or kerosene. Replace the paper element if it is damaged or cannot be cleaned thoroughly.

Servicing the Engine Oil

Oil Type: Detergent oil (API service SF, SG, SH, SJ, or SL)

Crankcase Capacity:

Model	Oil filter not removed	Oil filter removed
74386	1.6 qt (1.5 l)	1.8 qt (1.7 l)
74387	1.9 qt (1.8 l)	2.2 qt (2.1 l)

Viscosity: See the table below.

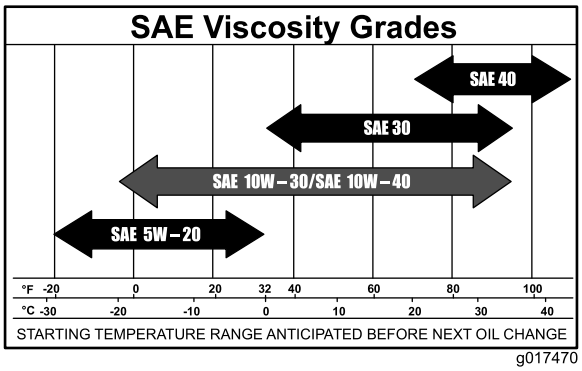

Figure 37

Note: Using multi grade oils (5W-20, 10W-30, and 10W -40) will increase oil consumption. Check oil level more frequently when using them.

Checking the Engine Oil Level

Service Interval: Before each use or daily

Note: Check the oil when the engine is cold.

⚠ WARNING

Contact with hot surfaces may cause personal injury.

Keep hands, feet, face, clothing and other body parts away the muffler and other hot surfaces.

Important: Do not overfill the crankcase with oil because damage to the engine may result. Do not run engine with oil below the low mark because the engine may be damaged.

1. Park the machine on a level surface, disengage the blade control switch, stop the engine, engage parking brake, and remove the key.

2. Make sure the engine is stopped, level, and is cool so the oil has had time to drain into the sump.
3. To keep dirt, grass clippings, etc., out of the engine, clean the area around the oil fill cap/dipstick before removing it.
4. Stop the engine, remove the key, and wait for all moving parts to stop before leaving the operating position (Figure 38).

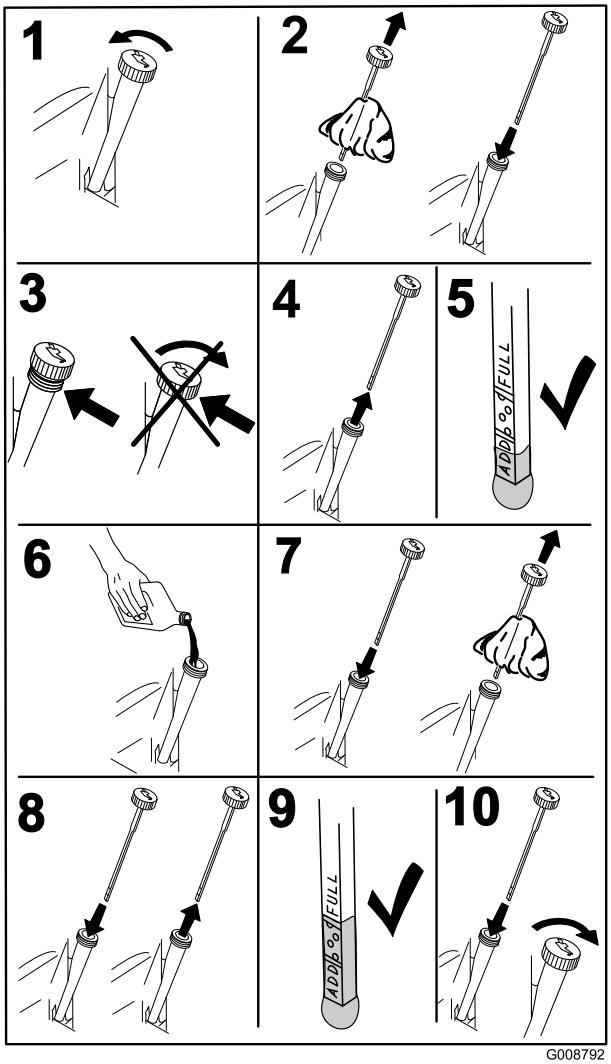

Figure 38

Changing the Engine Oil

Service Interval: After the first 8 hours—Change the engine oil.

Every 100 hours—Change the engine oil. (more often in dusty, dirty conditions)

Note: Dispose of the used oil at a recycling center.

1. Park the machine so that the drain side is slightly lower than the opposite side to assure the oil drains completely.
2. Disengage the PTO, move the motion control levers to the neutral locked position and set the parking brake.
3. Stop the engine, remove the key, and wait for all moving parts to stop before leaving the operating position (Figure 39).

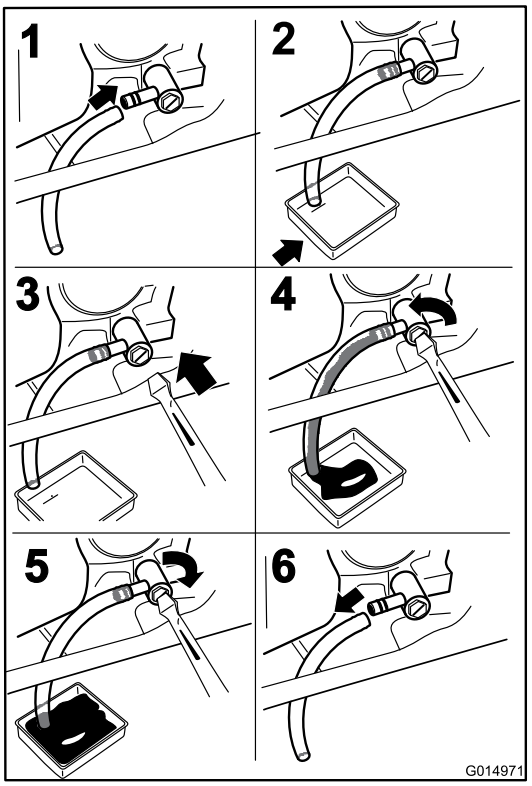

Figure 39

4. Slowly pour approximately 80% of the specified oil into the filler tube and slowly add the additional oil to bring it to the **Full** mark (Figure 40).

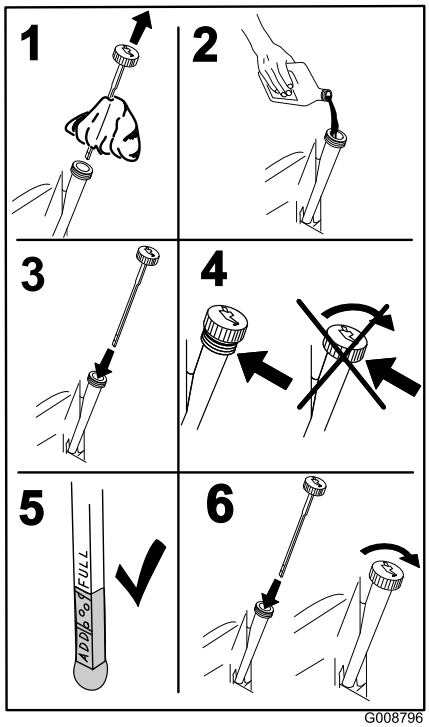

Figure 40

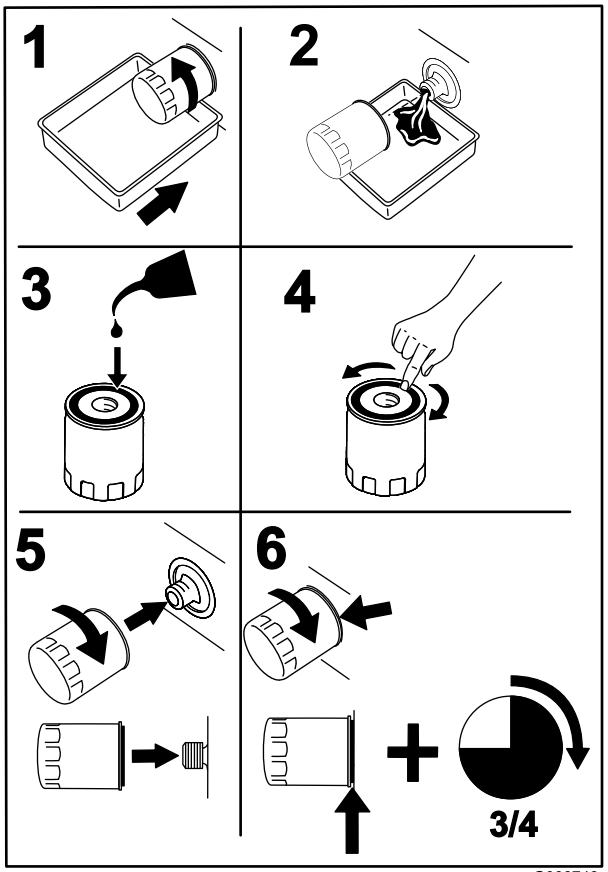

Figure 41

Changing the Engine Oil Filter

Service Interval: Every 200 hours—Change the oil filter. (more often in dusty, dirty conditions)

Note: Change the engine oil filter more frequently when operating conditions are extremely dusty or sandy.

1. Drain the oil from the engine; refer to Changing the Engine Oil.
2. Change the engine oil filter (Figure 41).

   Note: Ensure the oil filter gasket touches the engine and then an extra 3/4 turn is completed.
3. Fill the crankcase with the proper type of new oil; refer to Changing the Oil.

Servicing the Spark Plug

Service Interval: Every 100 hours—Check the spark plug(s).

Make sure the air gap between the center and side electrodes is correct before installing the spark plug. Use a spark plug wrench for removing and installing the spark plug(s) and a gapping tool/feeler gauge to check and adjust the air gap. Install a new spark plug(s) if necessary.

Type: NGK BPR4ES (or equivalent)

Air Gap: 0.030 inch (0.76 mm)

Removing the Spark Plug

1. Disengage the PTO, move the motion control levers to the neutral locked position and set the parking brake.
2. Stop the engine, remove the key, and wait for all moving parts to stop before leaving the operating position.

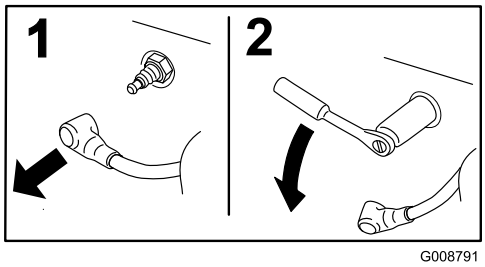

Figure 42

Note: Due to the deep recess around the spark plug, blowing out the cavity with compressed air is usually the most effective method for cleaning. The spark plug is most accessible when the blower housing is removed for cleaning.

Checking the Spark Plug

Important: Never clean the spark plug(s). Always replace the spark plug(s) when it has: a black coating, worn electrodes, an oily film, or cracks.

If you see light brown or gray on the insulator, the engine is operating properly. A black coating on the insulator usually means the air cleaner is dirty.

Set the gap to 0.030 inches (0.76 mm).

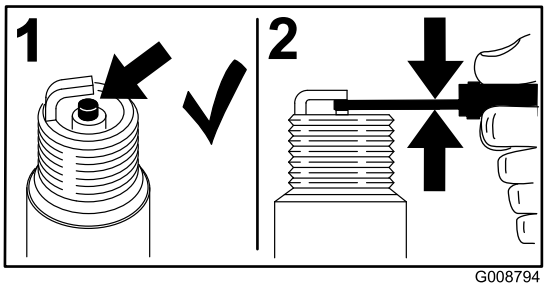

Figure 43

Installing the Spark Plug

Tighten the spark plug(s) to 16 ft-lb (22 N-m).

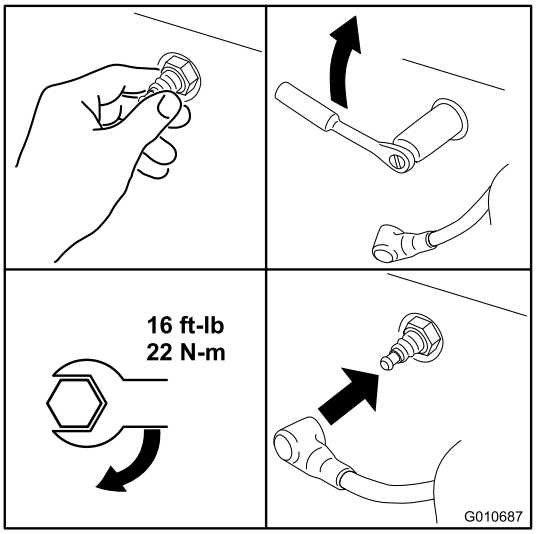

Figure 44

Cleaning the Cooling System

Clean the air intake screen from grass and debris before each use.

1. Disengage the blade control switch and move the control levers to the neutral locked position and apply the parking brake.
2. Stop the engine, remove the key, and wait for all moving parts to stop before leaving the operating position.
3. Remove the air intake screen, air cleaner cover, and fan housing.
4. Clean debris and grass from the parts.
5. Install the air intake screen, air cleaner cover, and fan housing.

Fuel System Maintenance

⚠ DANGER

In certain conditions, gasoline is extremely flammable and highly explosive. A fire or explosion from gasoline can burn you and others and can damage property.

- **Perform any fuel related maintenance when the engine is cold. Do this outdoors in an open area. Wipe up any gasoline that spills.**
- **Never smoke when draining gasoline, and stay away from an open flame or where a spark may ignite the gasoline fumes.**

Replacing the In-line Fuel Filter

Service Interval: Every 100 hours—Replace the in-line fuel filter

Never install a dirty filter if it is removed from the fuel line.

1. Park the machine on a level surface and disengage the blade control switch.
2. Move the motion control levers outward to the park position, stop the engine, remove the key, and wait for all moving parts to stop before leaving the operating position.
3. Locate the fuel filter on the side of the engine as shown in Figure 45.

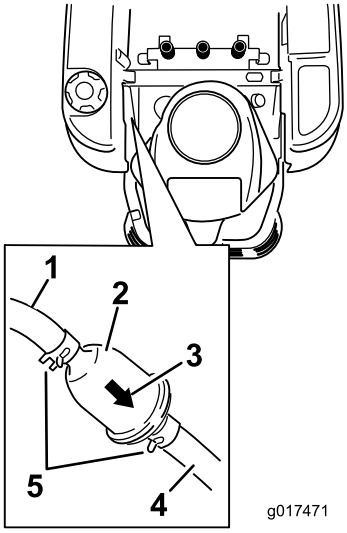

Figure 45

1. Fuel line from tank
2. In-line Fuel filter
3. Flow direction arrow
4. Fuel line to engine
5. Hose clamp

4. Squeeze the ends of the hose clamps together and slide them away from the filter (Figure 45).
5. Remove the filter from the fuel lines.
6. Install a new filter with the flow direction arrow coming from the fuel tank and pointing to the engine. Move the hose clamps close to the filter (Figure 45) to secure it in place.

Electrical System Maintenance

WARNING

CALIFORNIA
Proposition 65 Warning

Battery posts, terminals, and related accessories contain lead and lead compounds, chemicals known to the State of California to cause cancer and reproductive harm. Wash hands after handling.

Charging the Battery

Removing the Battery

⚠ WARNING

Battery terminals or metal tools could short against metal machine components causing sparks. Sparks can cause the battery gasses to explode, resulting in personal injury.

- **When removing or installing the battery, do not allow the battery terminals to touch any metal parts of the machine.**
- **Do not allow metal tools to short between the battery terminals and metal parts of the machine.**

1. Park the machine on a level surface and disengage the blade control switch.
2. Move the motion control levers outward to the park position, stop the engine, remove the key, and wait for all moving parts to stop before leaving the operating position.
3. Raise the seat to access the battery.
4. Disconnect the negative (black) ground cable from the battery post (Figure 46). Retain all fasteners.

⚠ WARNING

Incorrect battery cable routing could damage the machine and cables causing sparks. Sparks can cause the battery gasses to explode, resulting in personal injury.

- **Always disconnect the negative (black) battery cable before disconnecting the positive (red) cable.**
- **Always connect the positive (red) battery cable before connecting the negative (black) cable.**

5. Slide the rubber cover up the positive (red) cable. Disconnect the positive (red) cable from the battery post (Figure 46). Retain all fasteners.
6. Remove the battery hold-down (Figure 46) and lift the battery from the battery tray.

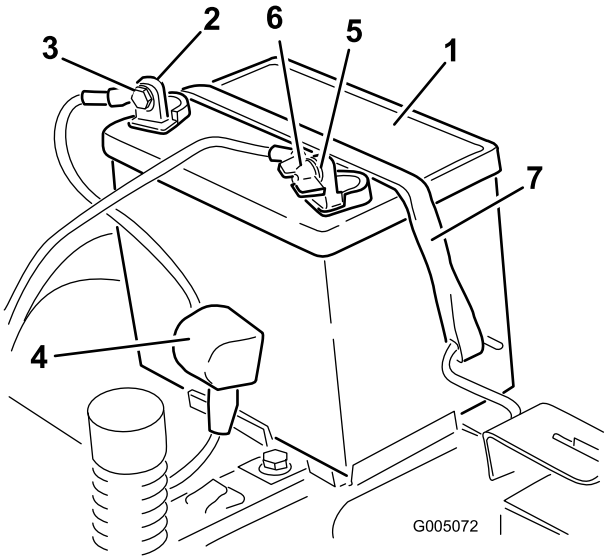

Figure 46

1. Battery
2. Positive battery post
3. Bolt, washer, and nut
4. Terminal boot
5. Negative battery post
6. Wing nut, washer, and bolt
7. Battery hold-down

Charging the Battery

Service Interval: Before storage—Charge the battery and disconnect battery cables.

1. Remove the battery from the chassis; refer to Removing the Battery.
2. Charge the battery for a minimum of 1 hour at 6 to 10 amps. Do not overcharge the battery.
3. When the battery is fully charged, unplug the charger from the electrical outlet, then disconnect the charger leads from the battery posts (Figure 47).

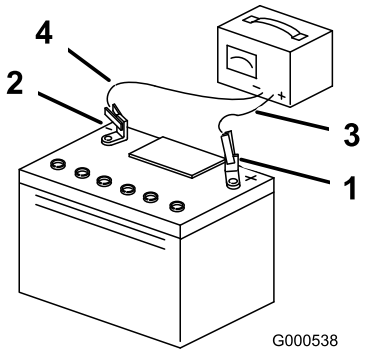

Figure 47

1. Positive battery post
2. Negative battery post
3. Red (+) charger lead
4. Black (-) charger lead

Note: Do not run the machine with the battery disconnected, electrical damage may occur.

Installing the Battery

1. Position the battery in the tray (Figure 46).
2. Install the positive (red) battery cable to the positive (+) battery terminal using the fasteners removed previously.
3. Install the negative battery cable to the negative (-) battery terminal using the fasteners removed previously.
4. Slide the red terminal boot onto the positive (red) battery post.
5. Secure the battery with the hold-down (Figure 46).
6. Lower the seat.

Servicing the Fuses

The electrical system is protected by fuses. It requires no maintenance; however, if a fuse blows, check the component/circuit for a malfunction or short.

Fuse:

- Main F1-30 amp, blade-type
- Charge Circuit F2-25 amp, blade-type

1. Remove the screws securing the control panel to the machine. Retain all fasteners
2. Lift the control pane up to access the main wiring harness and fuse block (Figure 48).
3. To replace a fuse, pull out on the fuse to remove it (Figure 48).

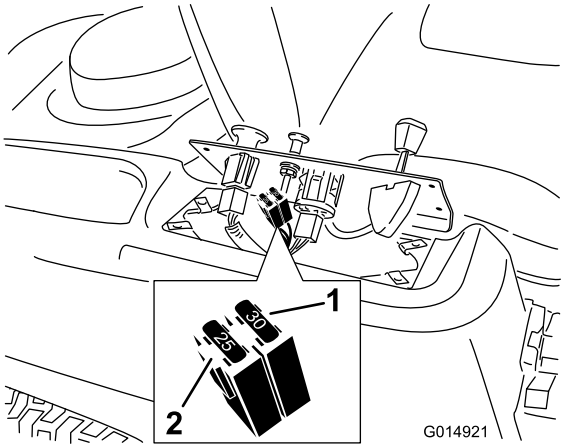

Figure 48

1. Main-30 amp
2. Charge circuit-25 amp

4. Return the control panel to its original position. Use the screws removed previously to secure the panel to the machine.

Drive System Maintenance

Checking the Tire Pressure

Service Interval: Every 25 hours—Check tire pressure.

Maintain the air pressure in the front and rear tires as specified. Uneven tire pressure can cause uneven cut. Check the pressure at the valve stem (Figure 49). Check the tires when they are cold to get the most accurate pressure reading.

Refer to the maximum pressure suggested by the tire manufacturer on the sidewall of the caster wheel tires.

Inflate the rear drive wheel tires to 12 psi.

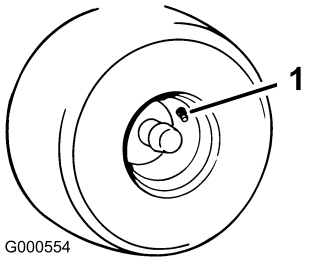

Figure 49

1. Valve stem

Releasing the Electric Brake

The electric brake can be release by manually rotating the link arms forward. Once the electric brake is energized the brake will reset.

To release the brake:

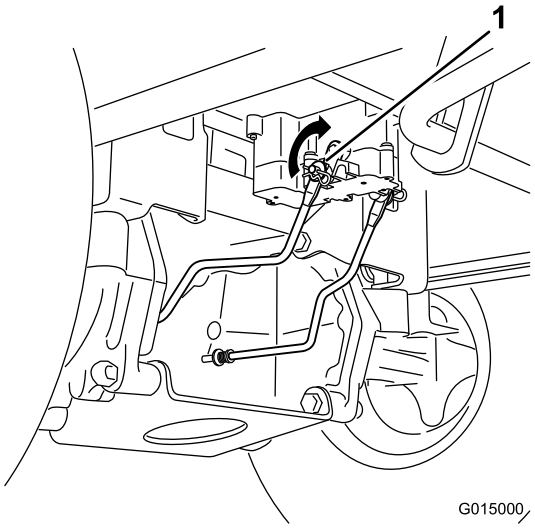

Figure 50

1. Brake link arm on the electric brake control module

1. Locate the shaft on the electric brake where the brake link arms are connected.
2. Rotate the shaft forward to release the brake.

Mower Maintenance

Servicing the Cutting Blades

Maintain sharp blades throughout the cutting season because sharp blades cut cleanly without tearing or shredding the grass blades. Tearing and shredding turns grass brown at the edges, which slows growth and increases the chance of disease.

Check the cutter blades daily for sharpness, and for any wear or damage. File down any nicks and sharpen the blades as necessary. If a blade is damaged or worn, replace it immediately with a genuine Toro replacement blade. For convenient sharpening and replacement, you may want to keep extra blades on hand.

⚠ WARNING

A worn or damaged blade can break, and a piece of the blade could be thrown into the operator's or bystander's area, resulting in serious personal injury or death.

- **Inspect the blade periodically for wear or damage.**
- **Replace a worn or damaged blade.**

Before Inspecting or Servicing the Blades

Park the machine on a level surface, disengage the blade control switch, and move the motion control levers outward to the park position. Stop the engine and remove the key.

Inspecting the Blades

Service Interval: Before each use or daily—Check the cutting blades.

1. Inspect the cutting edges (Figure 51). If the edges are not sharp or have nicks, remove and sharpen the blades; refer to Sharpening the Blades.
2. Inspect the blades, especially the curved area (Figure 51). If you notice any damage, wear, or a slot forming in this area (item 3 in Figure 51), immediately install a new blade.

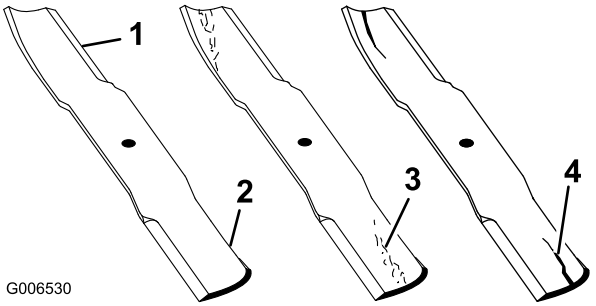

Figure 51

1. Cutting edge
2. Curved area
3. Wear/slot forming
4. Damage

Checking for Bent Blades

Note: The machine must be on a level surface for the following procedure.

1. Raise the mower deck to the highest height-of-cut position; also considered the 'transport' position.
2. While wearing thickly padded gloves or other adequate hand protection slowly rotate blade to be measure into a position that allows effective measurement of the distance between the cutting edge and the level surface the machine is on.

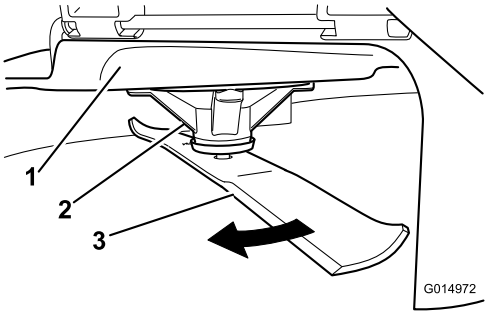

Figure 52

1. Deck
2. Spindle housing
3. Blade

3. Measure from the tip of the blade to the flat surface here.

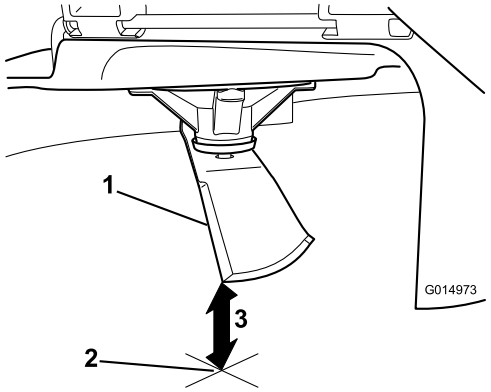

Figure 53

1. Blade, in position for measuring
2. Level surface
3. Measured distance between blade and surface (A)

4. Rotate the same blade 180 degrees so that the opposing cutting edge is now in the same position.

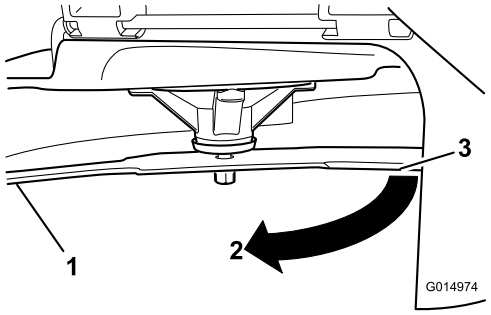

Figure 54

1. Blade, side previously measured
2. Measurement position used previously
3. Opposing side of blade being moved into measurement position

5. Measure from the tip of the blade to the flat surface here. The variance should be no more than 1/8 inch (3mm).

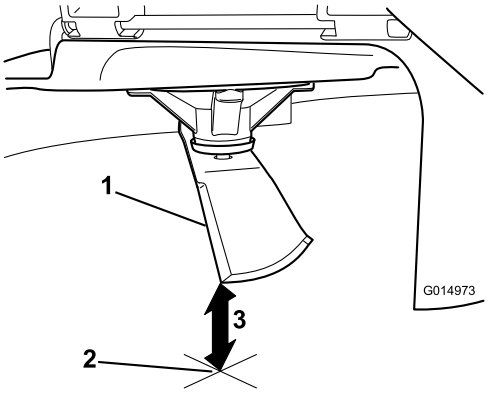

Figure 55

1. Opposing blade edge, in position for measuring
2. Level surface
3. Second measured distance between blade and surface (B)

⚠ WARNING

A blade that is bent or damaged could break apart and could seriously injure or kill you or bystanders.

- **Always replace bent or damaged blade with a new blade.**
- **Never file or create sharp notches in the edges or surfaces of blade.**

A. If the difference between A and B is greater than 1/8 inch (3mm) replace the blade with a new blade. Refer to Removing the Blades and Installing the Blades.

Note: If a bent blade is replaced with a new one and the dimension obtained continues to exceed 1/8 inch (3mm), the blade spindle could be bent. Contact an Authorized Toro Dealer for service.

B. If the variance is within constraints, move to the next blade..

Repeat this procedure on each blade.

Removing the Blades

The blades must be replaced if a solid object is hit, if the blade is out of balance, or the blade is bent. To ensure optimum performance and continued safety conformance of the machine, use genuine Toro replacement blades. Replacement blades made by other manufacturers may result in non-conformance with safety standards.

Hold the blade end using a rag or thickly-padded glove. Remove the blade bolt, curved washer, blade stiffener, and blade from the spindle shaft (Figure 56).

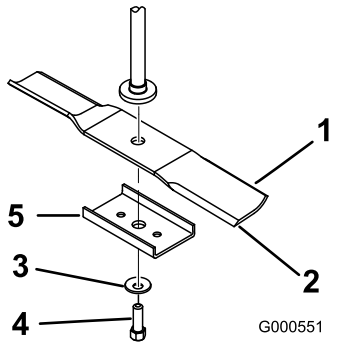

Figure 56

1. Sail area of blade
2. Blade
3. Curved washer
4. Blade bolt
5. Blade stiffener (Models with 42 inch decks only)

Sharpening the Blades

1. Use a file to sharpen the cutting edge at both ends of the blade (Figure 57). Maintain the original angle. The blade retains its balance if the same amount of material is removed from both cutting edges.

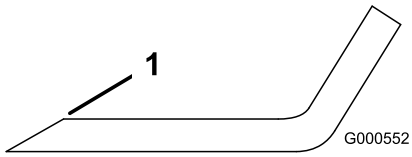

Figure 57

1. Sharpen at original angle

2. Check the balance of the blade by putting it on a blade balancer (Figure 58). If the blade stays in a horizontal position, the blade is balanced and can be used. If the blade is not balanced, file some metal off the end of the sail area only (Figure 57). Repeat this procedure until the blade is balanced.

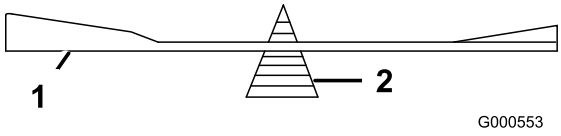

Figure 58

1. Blade
2. Balancer

Installing the Blades

1. Install the blade onto the spindle shaft (Figure 56).

   Important: The curved part of the blade must be pointing upward toward the inside of the mower to ensure proper cutting.

2. Install the blade stiffener, the curved washer (cupped side toward the blade) and the blade bolt (Figure 56).
3. Torque the blade bolt to 35-65 ft-lb (47-88 N-m).

Leveling the Mower Deck

Check to ensure the mower deck is level any time you install the mower or when you see an uneven cut on your lawn.

The mower deck must be checked for bent blades prior to leveling; any bent blades must be removed and replaced. Refer to the Checking for Bent Blades procedure before continuing.

The mower deck must be leveled side-to-side first then the front to rear slope can be adjusted.

Requirements:

- The machine must be on a level surface.
- All four tire must be properly inflated. Refer to Checking the Tire Pressure in the Drive System Maintenance section.

Side-to-Side Leveling

1. Park the machine on a level surface and disengage the blade control switch.
2. Move the motion control levers outward to the park position, stop the engine, remove the key, and wait for all moving parts to stop before leaving the operating position.
3. Set the height-of-cut lever to middle position.
4. Carefully rotate the blades so that they are all side to side (Figure 59 and Figure 60).

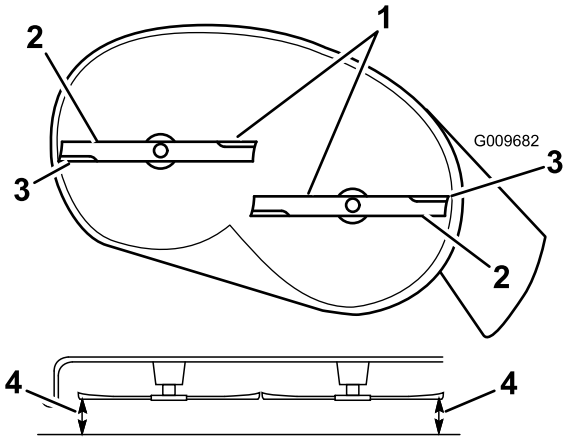

Figure 59

Mower Decks with 2 Blades

1. Blades side to side
2. Sail area of blade
3. Outside cutting edges
4. Measure from the tip of the blade to the flat surface here

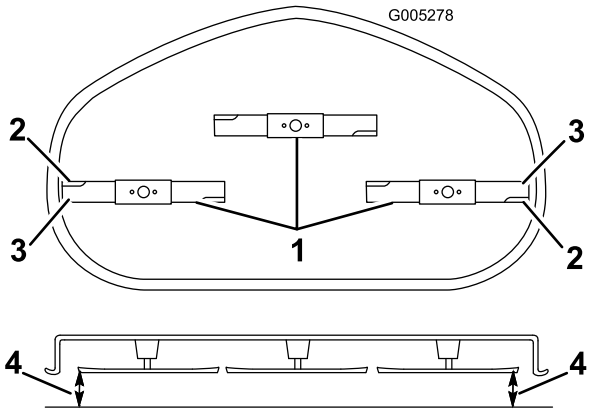

Figure 60

Mower Decks with 3 Blades

1. Blades side to side
2. Sail area of blade
3. Outside cutting edges
4. Measure from the tip of the blade to the flat surface here

5. Measure between the outside cutting edges and the flat surface (Figure 59 and Figure 60). If both measurements are not within 3/16 inch (5 mm), an adjustment is required; continue with this procedure.
6. Support the weight of mower deck by placing wood blocks under the edges of the mower deck.

   Note: Avoid placing the supports under any anti-scalp rollers if present on the mower deck.
7. Move to the left side of the machine. Check if the side carriage bolt is in the fixed or slotted position (Figure 61).
8. If the side carriage bolt is in the fixed position, remove the side carriage bolt and side locking nut from the fixed position and install it into the slotted adjustment position (Figure 61).

   If the bolt is in the slotted position, the carriage bolt and side locking nut do not need to be removed.

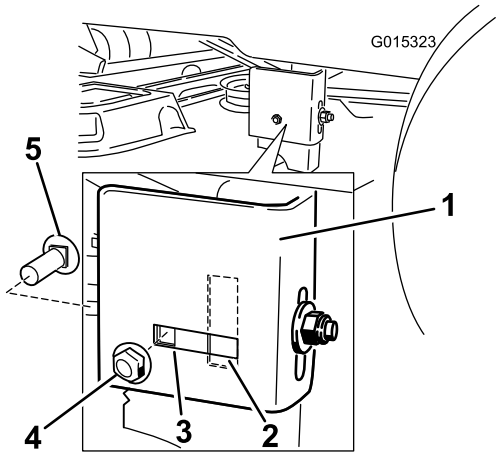

Figure 61

1. Hanger bracket
2. Slotted adjustment position
3. Fixed position
4. Side locking nut.
5. Side carriage bolt

9. Loosen the rear locking nut on the hanger bracket (Figure 62).

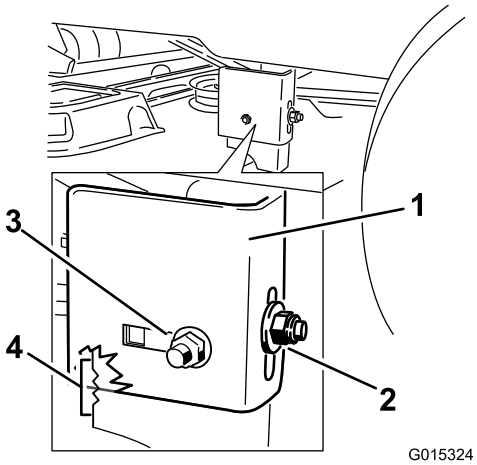

Figure 62

1. Hanger bracket
2. Rear locking nut
3. Side locking nut, slotted position.
4. Adjustment notches

10. Loosen the side locking nut on the hanger bracket just enough to allow the hanger to be adjusted (Figure 62). Use the notches on the welded bracket to measure the amount of adjustment. Each notch surface is equivalent to 0.25 inch, while a single side is 0.125 inch (Figure 63). Adjust the height of the mower deck to the desired height.

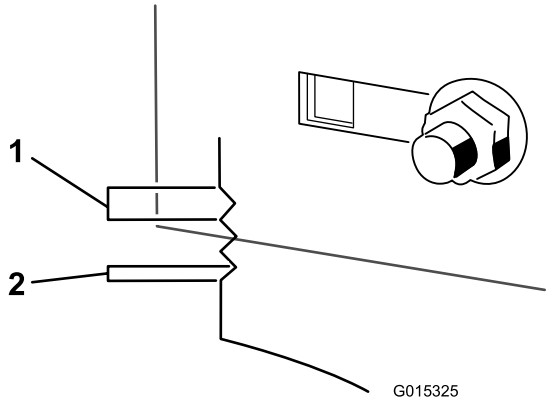

Figure 63

1. 0.25 inch
2. 0.125 inch

11. Stop the deck at the adjusted position and tighten the side locking nut on the hanger bracket to hold the new position (Figure 62). Tighten the rear locking nut on the hanger bracket.
12. Continue leveling the deck by checking the front-to-rear blade slope; refer to Adjusting the Front-to-Rear Blade Slope.

Adjusting the Front-to-Rear Blade Slope

Check the front-to-rear blade level any time you install the mower. If the front of the mower is more than 5/16 inch (7.9 mm) lower than the rear of the mower, adjust the blade level using the following instructions:

1. Park the machine on a level surface and disengage the blade control switch.
2. Move the motion control levers outward to the park position, stop the engine, remove the key, and wait for all moving parts to stop before leaving the operating position.
3. Set the height-of-cut lever to middle position.

   Note: Check and adjust the side-to-side blade level if you have not checked the setting; refer to Side-to-Side Leveling.
4. Carefully rotate the blades so they are facing front to rear (Figure 64 and Figure 65).

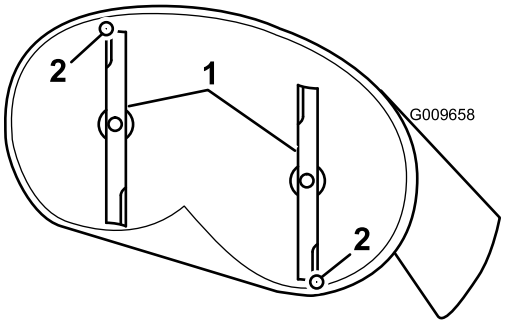

Figure 64
Mower Decks with 2 Blades

1. Blades front to rear
2. Measure from the tip of the blade to the flat surface here

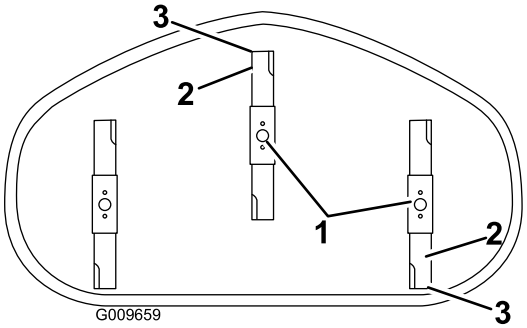

Figure 65
Mower Decks with 3 Blades

1. Blades front to rear
2. Outside cutting edges
3. Measure from the tip of the blade to the flat surface here

5. Measure from the tip of the front blade to the flat surface and the tip of the rear blade to the flat surface (Figure 64 and Figure 65). If the front blade tip is not 1/16-5/16 inch (1.6-7.9 mm) lower than the rear blade tip, adjust the front locknut.
6. To adjust the front-to-rear blade slope, rotate the adjustment nut in the front of the mower (Figure 66).

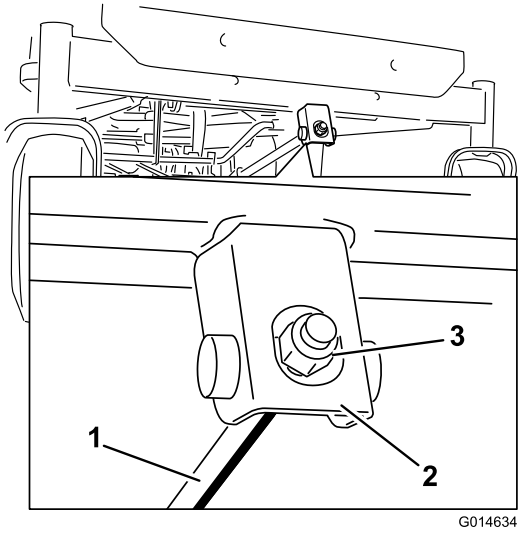

Figure 66

1. Adjusting rod
2. Adjusting block
3. Lock nut

7. To raise the front of the mower, tighten the adjustment nut. To lower the front of the mower, loosen the adjustment nut.
8. After adjustment, check the front-to-rear slope again. Continue adjusting the nut until the front blade tip is 1/16-5/16 inch (1.6-7.9 mm) lower than the rear blade tip (Figure 64 and Figure 65).
9. When the front-to-rear blade slope is correct check the side-to-side level of the mower again; refer to Leveling the Mower from Side-to-Side.

Removing the Mower

1. Park the machine on a level surface and disengage the blade control switch.
2. Move the motion control levers outward to the park position, stop the engine, remove the key, and wait for all moving parts to stop before leaving the operating position.
3. Lower the height-of-cut lever to the lowest position.
4. Remove the hairpin cotter from the front support rod and remove the rod from the deck bracket (Figure 67). Carefully lower the front of the mower deck to the ground.

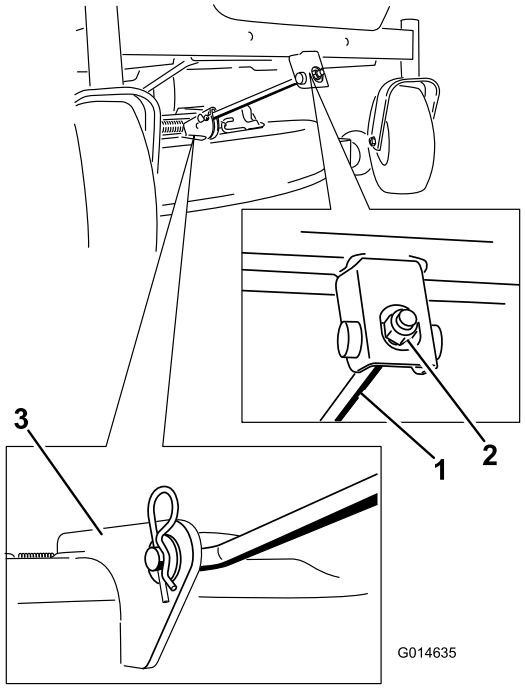

Figure 67

1. Front support rod
2. Locking nut
3. Deck bracket

5. Lift the mower deck and hanger brackets clear of the rear lift rod and lower the mower carefully to the ground (Figure 68).

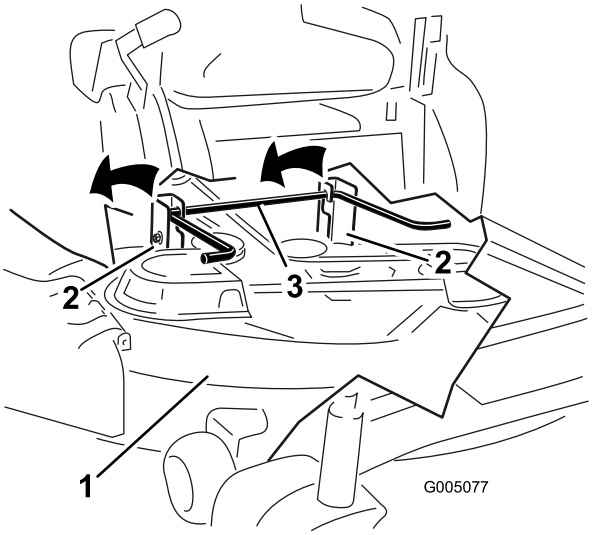

Figure 68

1. Mower deck
2. Hanger bracket
3. Rear lift rod

6. Slide the mower deck rearward to remove the mower belt from the engine pulley.
7. Slide the mower deck out from underneath the machine.

Note: Retain all parts for future installation.

Mower Belt Maintenance

Inspecting the Belts

Service Interval: Every 25 hours—Check the belts for wear/cracks.

Check the belts for cracks, frayed edges, burn marks, or any other damage. Replace damaged belts.

Replacing the Mower Belt

Squealing when the belt is rotating, blades slipping when cutting grass, frayed belt edges, burn marks, and cracks are signs of a worn mower belt. Replace the mower belt if any of these conditions are evident.

1. Park the machine on a level surface and disengage the blade control switch.
2. Move the motion control levers outward to the park position, stop the engine, remove the key, and wait for all moving parts to stop before leaving the operating position.
3. Set the height-of-cut at the lowest cutting position [1-1/2 inch (38 mm)].
4. Using a spring removal tool, (Toro part no. 92-5771), remove the idler spring from the deck hook to remove tension on the idler pulley and roll the belt off of the pulleys (Figure 69 and Figure 70).

⚠ WARNING

The spring is under tension when installed and can cause personal injury.

Be careful when removing the belt.

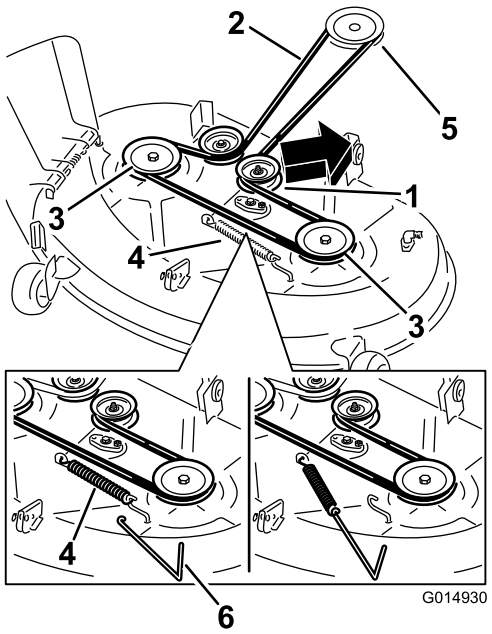

Figure 69

Mower Decks with 2 Blades

1. Idler pulley
2. Mower belt
3. Outside pulley
4. Spring
5. Engine pulley
6. Spring removal too

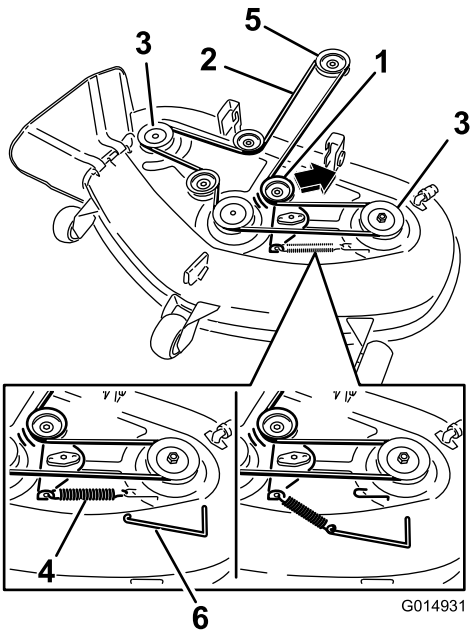

Figure 70

Mower Decks with 3 Blades

1. Idler pulley
2. Mower belt
3. Outside pulley
4. Spring
5. Engine pulley
6. Spring removal too

5. Route the new belt around the engine pulley and mower pulleys (Figure 70).

6. Using a spring removal tool, (Toro part no. 92-5771), install the idler spring over the deck hook and placing tension on the idler pulley and mower belt ((Figure 69 and Figure 70)).

Installing the Mower

1. Park the machine on a level surface and disengage the blade control switch.
2. Move the motion control levers outward to the park position, stop the engine, remove the key, and wait for all moving parts to stop before leaving the operating position.
3. Slide the mower under the machine.
4. Lower the height-of-cut lever to the lowest position.
5. Lift the rear of the mower deck and guide the hanger brackets over the rear lift rod (Figure 68).
6. Attach the front support rod to the mower deck with the clevis pin and hairpin cotter (Figure 67).
7. Install the mower belt onto the engine pulley; refer to Replacing the Mower Belt.

Replacing the Grass Deflector

Service Interval: Before each use or daily—Inspect the grass deflector for damage

⚠ WARNING

An uncovered discharge opening could allow the lawn mower to throw objects in the operator's or bystander's direction and result in serious injury. Also, contact with the blade could occur.

Never operate the machine without grass deflector, discharge cover or grass collection system in place.

Inspect the grass deflector for damage before each use. Replace any damaged parts before use.

1. Locate items shown in Figure 71.

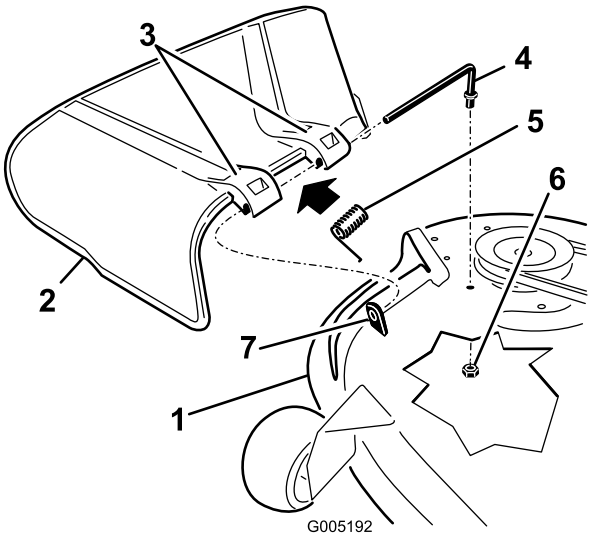

Figure 71

1. Mower deck
2. Grass deflector
3. Grass deflector bracket
4. Rod
5. Spring
6. Nut (3/8 inch)
7. Short stand-off

2. Remove the nut (3/8 inch) from the rod under the mower (Figure 71).
3. Slide the rod out of the short stand-off, spring, and grass deflector (Figure 71). Remove the damaged or worn grass deflector.
4. Replace the grass deflector (Figure 71).
5. Slide rod, straight end, through the rear grass deflector bracket.
6. Place the spring on the rod, with end wires down, and between the grass deflector brackets. Slide rod through second grass deflector bracket (Figure 71).
7. Insert rod at front of grass deflector into short stand-off on deck. Secure rear end of rod into the mower with a nut (3/8 inch) (Figure 71).

Important: The grass deflector must be spring loaded in the down position. Lift the deflector up to test that it snaps to the full down position.

Cleaning

Washing the Underside of the Mower

Service Interval: After each use—Clean the mower deck housing.

Wash the underside of the mower after each use to prevent grass buildup for improved mulch action and clipping dispersal.

1. Park the machine on a level surface and disengage the blade control switch.
2. Move the motion control levers outward to the park position, stop the engine, remove the key, and wait for all moving parts to stop before leaving the operating position.
3. Attach the hose coupling to the end of the mower washout fitting, and turn the water on high (Figure 72).

   Note: Spread petroleum jelly on the washout fitting O-ring to make the coupling slide on easier and protect the O-ring.

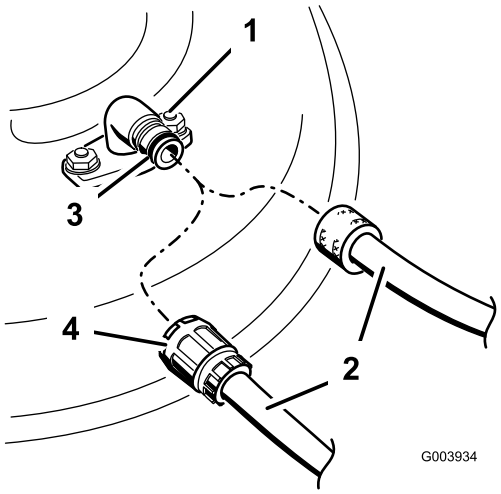

Figure 72

1. Washout fitting
2. Hose
3. O-ring
4. Coupling

4. Lower the mower to the lowest height-of-cut.
5. Sit on the seat and start the engine. Engage the blade control switch and let the mower run for one to three minutes.
6. Disengage the blade control switch, stop the engine, and remove the ignition key. Wait for all moving parts to stop.
7. Turn the water off and remove the coupling from the washout fitting.

   Note: If the mower is not clean after one washing, soak it and let it stand for 30 minutes. Then repeat the process.

8. Run the mower again for one to three minutes to remove excess water.

⚠ WARNING

A broken or missing washout fitting could expose you and others to thrown objects or blade contact. Contact with blade or thrown debris can cause injury or death.

- **Replace broken or missing washout fitting immediately, before using mower again.**
- **Never put your hands or feet under the mower or through openings in the mower.**

Storage

Cleaning and Storage

1. Disengage the blade control switch, move the motion controls outward to the park position, stop the engine, and remove the key.
2. Remove grass clippings, dirt, and grime from the external parts of the entire machine, especially the engine. Clean dirt and chaff from the outside of the engine cylinder head fins and blower housing.

   Important: You can wash the machine with mild detergent and water. Do not pressure wash the machine. Avoid excessive use of water, especially near the control panel, under the seat, around the engine, hydraulic pumps, and motors.
3. Service the air cleaner; refer to Servicing the Air Cleaner in the Engine Maintenance section.
4. Grease and oil the machine; refer to the Lubrication section.
5. Change the crankcase oil and filter; refer to Servicing the Engine Oil in the Engine Maintenance section.
6. Check the tire pressure; refer to Checking the Tire Pressure in the Drive System Maintenance section.
7. Charge the battery; refer to Servicing the Battery in the Electrical System Maintenance section.
8. Check the condition of the blades; refer to Servicing the Cutting Blades in the Mower Maintenance section.
9. Prepare the machine for storage when non-use occurs over 30 days. Prepare the machine for storage as follows.
10. Add a petroleum based stabilizer/conditioner to the fuel in the tank. Follow the mixing instructions from the stabilizer manufacturer. Do not use an alcohol based stabilizer (ethanol or methanol).

    Note: A fuel stabilizer/conditioner is most effective when mixed with fresh gasoline and used at all times.

    Run the engine to distribute the conditioned fuel through the fuel system (5 minutes).

    Stop the engine, allow it to cool, and drain the fuel tank.

    Restart the engine and run it until it stops.

    Choke the engine. Start and run the engine until it will not start.

    Dispose of fuel properly. Recycle pursuant to local codes.

    Important: Do not store stabilizer/conditioned gasoline over 30 days.
11. Remove the spark plug(s) and check its condition; refer to Servicing the Spark Plug in the Engine Maintenance section. With the spark plug(s) removed from the engine, pour two tablespoons of engine oil into the spark plug hole. Use the starter to crank the engine and distribute the oil inside the cylinder. Install the spark plug(s). Do not install the wire on the spark plug(s).
12. Clean any dirt and chaff from the top of the mower.
13. Scrape any heavy buildup of grass and dirt from the underside of the mower, then wash the mower with a garden hose.
14. Check the condition of the drive and mower belts.
15. Check and tighten all bolts, nuts, and screws. Repair or replace any part that is worn or damaged.
16. Paint all scratched or bare metal surfaces. Paint is available from your Authorized Service Dealer.
17. Store the machine in a clean, dry garage or storage area. Remove the key from the ignition switch and keep it in a memorable place. Cover the machine to protect it and keep it clean.

Troubleshooting

Problem	Possible Cause	Corrective Action
The engine overheats.	1. The engine load is excessive. 2. The oil level in the crankcase is low. 3. The cooling fins and air passages under the engine blower housing are plugged. 4. The air cleaner is dirty. 5. Dirt, water, or stale fuel is in fuel system.	1. Reduce ground speed. 2. Add oil to the crankcase. 3. Remove the obstruction from the cooling fins and air passages. 4. Clean or replace the air cleaner element. 5. Contact an Authorized Service Dealer
The starter does not crank	1. The blade control switch is engaged. 2. The motion control levers are not in the park position. 3. The battery is dead. 4. The electrical connections are corroded or loose. 5. A fuse is blown. 6. A relay or switch is damaged.	1. Move the blade control switch to Disengaged. 2. Move the motion control levers outward to the park position. 3. Charge the battery. 4. Check the electrical connections for good contact. 5. Replace the fuse. 6. Contact an Authorized Service Dealer.
The engine will not start, starts hard, or fails to keep running.	1. The fuel tank is empty. 2. The choke is not on. 3. The air cleaner is dirty. 4. The spark plug wire(s) is loose or disconnected. 5. The spark plug(s) is pitted, fouled, or the gap is incorrect. 6. There is dirt in fuel filter. 7. Dirt, water, or stale fuel is in fuel system. 8. There is incorrect fuel in the fuel tank. 9. The oil level in the crankcase is low.	1. Fill the fuel tank. 2. Move the choke lever to On. 3. Clean or replace the air cleaner element. 4. Install the wire(s) on the spark plug. 5. Install a new, correctly gapped spark plug(s). 6. Replace the fuel filter. 7. Contact an Authorized Service Dealer. 8. Drain the tank and replace the fuel with the proper type. 9. Add oil to the crankcase.
The machine does not drive.	1. The bypass valves are open. 2. The traction belts are worn, loose, or broken. 3. The traction belts are off of the pulleys. 4. The transmission has failed.	1. Close the tow valves. 2. Contact an Authorized Service Dealer. 3. Contact an Authorized Service Dealer. 4. Contact an Authorized Service Dealer.
There is abnormal vibration.	1. The engine mounting bolts are loose. 2. The engine pulley, idler pulley, or blade pulley is loose. 3. The engine pulley is damaged. 4. The cutting blade(s) is/are bent or unbalanced. 5. A blade mounting bolt is loose. 6. A blade spindle is bent.	1. Tighten the engine mounting bolts. 2. Tighten the appropriate pulley. 3. Contact an Authorized Service Dealer. 4. Install a new cutting blade(s). 5. Tighten the blade mounting bolt. 6. Contact an Authorized Service Dealer.

Problem	Possible Cause	Corrective Action
Uneven cutting height.	1. The blade(s) is not sharp. 2. A cutting blade(s) is/are bent. 3. The mower is not level. 4. An anti-scalp wheel is not set correctly. 5. The underside of the mower is dirty. 6. The tire pressure is incorrect. 7. A blade spindle is bent.	1. Sharpen the blade(s). 2. Install a new cutting blade(s). 3. Level the mower from side-to-side and front-to-rear. 4. Adjust the anti-scalp wheel height. 5. Clean the underside of the mower. 6. Adjust the tire pressure. 7. Contact an Authorized Service Dealer.
The blades do not rotate.	1. The drive belt is worn, loose or broken. 2. The drive belt is off of the pulley. 3. The Power Take-Off (PTO) switch or PTO clutch is faulty. 4. The mower belt is worn, loose, or broken.	1. Install a new drive belt. 2. Install the drive belt and check the adjusting shafts and belt guides for the correct position. 3. Contact an Authorized Service Dealer. 4. Install a new mower belt.

Schematics

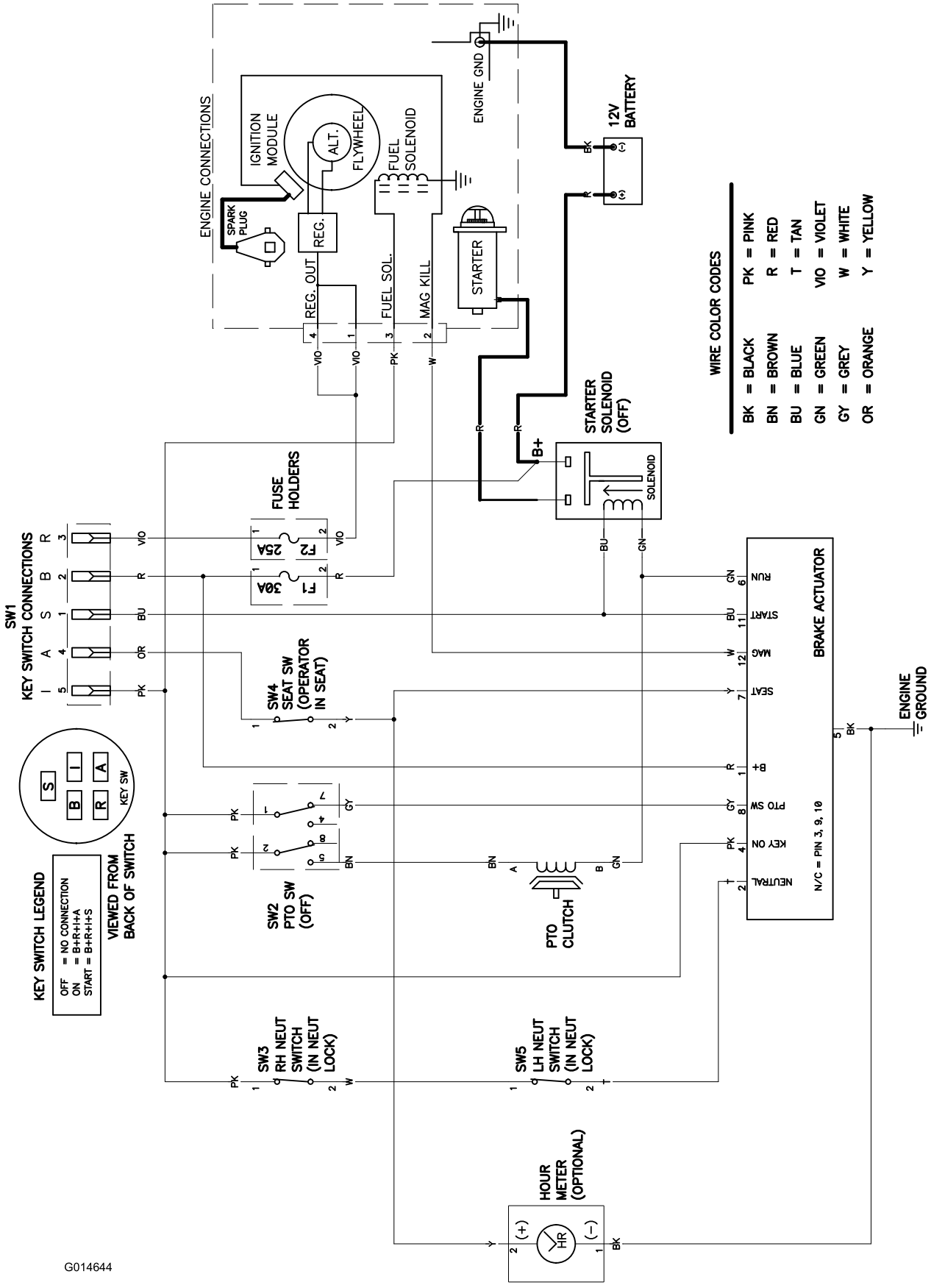

Electrical Diagram (Rev. A)

Notes:

Notes:

International Distributor List

Distributor:	Country:	Phone Number:	Distributor:	Country:	Phone Number:
Atlantis Su ve Sulama Sisstemleri Lt	Turkey	90 216 344 86 74	Maquiver S.A.	Colombia	57 1 236 4079
Balama Prima Engineering Equip.	Hong Kong	852 2155 2163	Maruyama Mfg. Co. Inc.	Japan	81 3 3252 2285
B-Ray Corporation	Korea	82 32 551 2076	Agrolanc Kft	Hungary	36 27 539 640
Casco Sales Company	Puerto Rico	787 788 8383	Mountfield a.s.	Czech Republic	420 255 704 220
Ceres S.A.	Costa Rica	506 239 1138	Munditol S.A.	Argentina	54 11 4 821 9999
CSSC Turf Equipment (pvt) Ltd.	Sri Lanka	94 11 2746100	Oslinger Turf Equipment SA	Ecuador	593 4 239 6970
Cyril Johnston & Co.	Northern Ireland	44 2890 813 121	Oy Hako Ground and Garden Ab	Finland	358 987 00733
Equiver	Mexico	52 55 539 95444	Parkland Products Ltd.	New Zealand	64 3 34 93760
Femco S.A.	Guatemala	502 442 3277	Prato Verde S.p.A.	Italy	39 049 9128 128
G.Y.K. Company Ltd.	Japan	81 726 325 861	Prochaska & Cie	Austria	431 278 5100
Geomechaniki of Athens	Greece	30 10 935 0054	RT Cohen 2004 Ltd.	Israel	972 986 17979
Guandong Golden Star	China	86 20 876 51338	Riversa	Spain	34 9 52 83 7500
Hako Ground and Garden	Sweden	46 35 10 0000	Sc Svend Carlsen A/S	Denmark	45 66 109 200
Hako Ground and Garden	Norway	47 22 90 7760	Solvert S.A.S.	France	33 1 30 81 77 00
Hayter Limited (U.K.)	United Kingdom	44 1279 723 444	Spypros Stavrinides Limited	Cyprus	357 22 434131
Hydroturf Int. Co Dubai	United Arab Emirates	97 14 347 9479	Surge Systems India Limited	India	91 1 292299901
Hydroturf Egypt LLC	Egypt	202 519 4308	T-Markt Logistics Ltd.	Hungary	36 26 525 500
Irriamc	Portugal	351 21 238 8260	Toro Australia	Australia	61 3 9580 7355
Irrigation Products Int'l Pvt Ltd.	India	86 22 83960789	Toro Europe NV	Belgium	32 14 562 960
Jean Heybroek b.v.	Netherlands	31 30 639 4611			

European Privacy Notice

The Information Toro Collects
Toro Warranty Company (Toro) respects your privacy. In order to process your warranty claim and contact you in the event of a product recall, we ask you to share certain personal information with us, either directly or through your local Toro company or dealer.

The Toro warranty system is hosted on servers located within the United States where privacy law may not provide the same protection as applies in your country.

BY SHARING YOUR PERSONAL INFORMATION WITH US, YOU ARE CONSENTING TO THE PROCESSING OF YOUR PERSONAL INFORMATION AS DESCRIBED IN THIS PRIVACY NOTICE.

The Way Toro Uses Information
Toro may use your personal information to process warranty claims, to contact you in the event of a product recall and for any other purpose which we tell you about. Toro may share your information with Toro's affiliates, dealers or other business partners in connection with any of these activities. We will not sell your personal information to any other company. We reserve the right to disclose personal information in order to comply with applicable laws and with requests by the appropriate authorities, to operate our systems properly or for our own protection or that of other users.

Retention of your Personal Information
We will keep your personal information as long as we need it for the purposes for which it was originally collected or for other legitimate purposes (such as regulatory compliance), or as required by applicable law.

Toro's Commitment to Security of Your Personal Information
We take reasonable precautions in order to protect the security of your personal information. We also take steps to maintain the accuracy and current status of personal information.

Access and Correction of your Personal Information
If you would like to review or correct your personal information, please contact us by email at legal@toro.com.

Australian Consumer Law

Australian customers will find details relating to the Australian Consumer Law either inside the box or at your local Toro Dealer.

The Toro Warranty and The Toro GTS Starting Guarantee

Conditions and Products Covered

The Toro Company and its affiliate, Toro Warranty Company, pursuant to an agreement between them, jointly promise to repair for the original purchaser[1] the Toro Product listed below if defective in materials or workmanship or if the Toro GTS (Guaranteed to Start) engine will not start on the first or second pull, provided the routine maintenance required in the *Operator's Manual* have been performed.

The following time periods apply from the date of purchase:

Products	Warranty Period
Walk Power Mowers	
• Cast Deck	5 years Residential Use[2] 90 Days Commercial Use
• Engine	5 years GTS Guarantee, Residential Use[3]
• Battery	2 years
• Steel Deck	2 years Residential Use[2] 90 Days Commercial Use
• Engine	2 years GTS Guarantee, Residential Use[3]
TimeMaster Mowers	3 years Residential Use[2] 90 Days Commercial Use
• Engine	3 years GTS Guarantee, Residential Use[3]
• Battery	2 years
Electric Hand Held Products	2 years Residential Use[2] No Warranty for Commercial Use
Snowthrowers	
• Single Stage	2 years Residential Use[2] 45 Days Commercial Use
• Engine	2 years GTS Guarantee, Residential Use[3]
• Two Stage	3 years Residential Use[2] 45 Days Commercial Use
• Chute, chute deflector and impeller housing cover	Lifetime (original owner only)[5]
Electric Snowthrowers	2 years Residential Use[2] No Warranty for Commercial Use
All Ride-On Units Below	
• Engine	See engine manufacturer's warranty[4]
• Battery	2 years Residential Use[2]
• Attachments	2 years Residential Use[2]
DH Lawn & Garden Tractors	2 years Residential Use[2] 90 Days Commercial Use
XLS Lawn & Garden Tractors	3 years Residential Use[2] 90 Days Commercial Use
TimeCutter	3 years Residential Use[2] 90 Days Commercial Use
TITAN Mowers	3 years or 240 hours[5]
• Frame	Lifetime (original owner only)[6]
Z Master Mowers — 2000 Series	4 years or 500 hours[5]
• Frame	Lifetime (original owner only)[6]

[1]Original Purchaser means the person who originally purchased the Toro Product.

[2]Residential use means use of the product on the same lot as your home. Use at more than one location is considered commercial use and the commercial use warranty would apply.

[3]The Toro GTS Starting Guarantee does not apply when the product is used commercially.

[4]Some engines used on Toro Products are warranted by the engine manufacturer.

[5]Whichever occurs first.

[6]Lifetime Frame Warranty - If the main frame, consisting of the parts welded together to form the tractor structure that other components such as the engine are secured to, cracks or breaks in normal use, it will be repaired or replaced, at Toro's option, under warranty at no cost for parts and labor. Frame failure due to misuse or abuse and failure or repair required due to rust or corrosion are not covered.

This warranty covers the cost of parts and labor, but you must pay transportation costs.

Warranty may be denied if the hour meter is disconnected, altered, or shows signs of being tampered with.

Owner Responsibilities

You must maintain your Toro Product by following the maintenance procedures described in the *Operator's Manual*. Such routine maintenance, whether performed by a dealer or by you, is at your expense.

Instructions for Obtaining Warranty Service

If you think that your Toro Product contains a defect in materials or workmanship, follow this procedure:

1. Contact your seller to arrange service of the product. If for any reason it is impossible for you to contact your seller, you may contact any Toro Authorized Distributor to arrange service. See attached Distributor List.
2. Bring the product and your proof of purchase (sales receipt) to the servicing outlet. If for any reason you are dissatisfied with the servicing outlet's analysis or with the assistance provided, contact us at:

   Toro Customer Care Department, RLC Division
   Toro Warranty Company
   8111 Lyndale Avenue South
   Bloomington, MN 55420-1196
   001–952–948–4707

Items and Conditions Not Covered

This express warranty does not cover the following:

- Cost of regular maintenance service or wear parts, such as blades, rotor blades (paddles), scraper blades, belts, fuel, lubricants, oil changes, spark plugs, pneumatic tires, cable/linkage or brake adjustments
- Any product or part which has been altered or misused and requires replacement or repair due to accidents or lack of proper maintenance
- Repairs necessary due to failure to use fresh fuel (less than one month old), or failure to properly prepare the unit prior to any period of non-use over one month
- All repairs covered by these warranties must be performed by an authorized Toro servicing outlet using approved replacement parts.

General Conditions

The purchaser is covered by the national laws of each country. The rights to which the purchaser is entitled with the support of these laws are not restricted by this warranty.