Form No. 3375-793 Rev A

TORO®

Count on it.

Parts Catalog

TITAN ZX5420 Zero-Turn-Radius Riding Mower

Model No. 74924—Serial No. 313000001 and Up

Register at www.Toro.com.
Original Instructions (EN)

3375-793 A

Ordering Replacement Parts

To order replacement parts, please supply the part number, the quantity, and the description of each part desired.

Understanding Reference Numbers

Each identified part in an illustration has a reference number. The reference number for a part also appears in the parts list, along with other information about the part.

This catalog uses two special reference number formats, one to indicate parts in a service assembly and another to indicate the quantity of a given part in an illustration.

Service Assembly Reference Numbers

Parts in service assemblies have reference numbers in the form a:b. The a represents the reference number of the entire service assembly and the b represents a sequential number unique to each part within the service assembly.

For example, a wheel assembly might be identified by reference number 6, the tire by 6:1, the valve by 6:2, and the wheel by 6:3. When you order the assembly identified by reference number 6, you receive all parts identified by reference numbers 6:1,6:2, and 6:3. However, you may also order any part individually. Reference numbers of this type appear in illustration and in parts lists.

Reference Numbers Indicating Quantity

In an illustration, if a reference number indicates more than one part, the reference number has the form nX y. The n represents the quantity of the part, the X is the multiplication symbol, and the y represents the reference number.

For example, in an illustration, the reference number 2X 37 means that two of the parts identified by reference number 37 are indicated.

List of Abbreviations

AR: as required

ASM: assembly

BBC: blade brake control

BHTF: button head thread forming

CARR: carriage

CCW: counter clockwise

CW: clockwise

DEG: degrees

DPA: Dual Point Adjustment

ECM: electronic control module

EXT: external

FH: flat head

GA: gauge

HD: heavy-duty

HF: hex flange

HH: hex head

HHF: hex head flange

HHFTF: hex head flange thread forming

HJ: hex jam

HLH: hex lag head

HOC: height-of-cut

HSBH: hex socket button head

HSFH: hex socket flat head

HSH: hex socket head

HWH: hex washer head

HWHTF: hex washer head thread forming

HYD: hydraulic

LH: left hand

LP: Liquefied Petroleum Gas

LPG: Liquefied Petroleum Gas

NI: nylon insert

NPTF: national pipe thread fine

PFH: phillips flat head

PPH: phillips pan head

PPHTF: phillips pan head thread forming

PRH: phillips round head

PTH: phillips truss head

PTO: power-take-off

RH: right hand

ROPS: roll-over protection system

RRB: rear roller brush

SFH: slotted fillister head

SHH: slotted hex head

SHWH: slotted hex washer head

SPH: slotted pan head

SQH: square head

SRH: slotted round head

STD: standard

TAP: self tapping

TTH: torx truss head

Contents

Frame, Front Axle and Caster Wheel Assembly 4
Wheel and Tire Assembly No. 125-1822 5
Wheel and Tire Assembly No. 115-2554 6
Control Panel and Body Styling Pod Assembly 7
Traction Drive Assembly 8
RH Hydro Assembly No. 115-2550 10
LH Hydro Assembly No. 115-2551 12
Motion Control Assembly 14
Deck Lift Assembly 16
Seat Assembly 17
Brake Link Assembly 18
Engine, Muffler and Clutch Assembly 19
Fuel Delivery Assembly 20
Multi Layer Fuel Tank Assembly No. 117-7352 21
Roll-Over Protection System Assembly 22
Electrical Assembly 23
54 Inch Deck Assembly 24
54 Inch Deck and Decal Assembly No. 117-5374 25
54 Inch Deck Baffle and Guard Assembly 26
Deck, Belt and Mulch Blade Assembly 27
Attachments and Accessories 28

© 2012—The Toro® Company
8111 Lyndale Avenue South
Bloomington, MN 55420

Contact us at www.Toro.com.
Printed in the USA.
All Rights Reserved

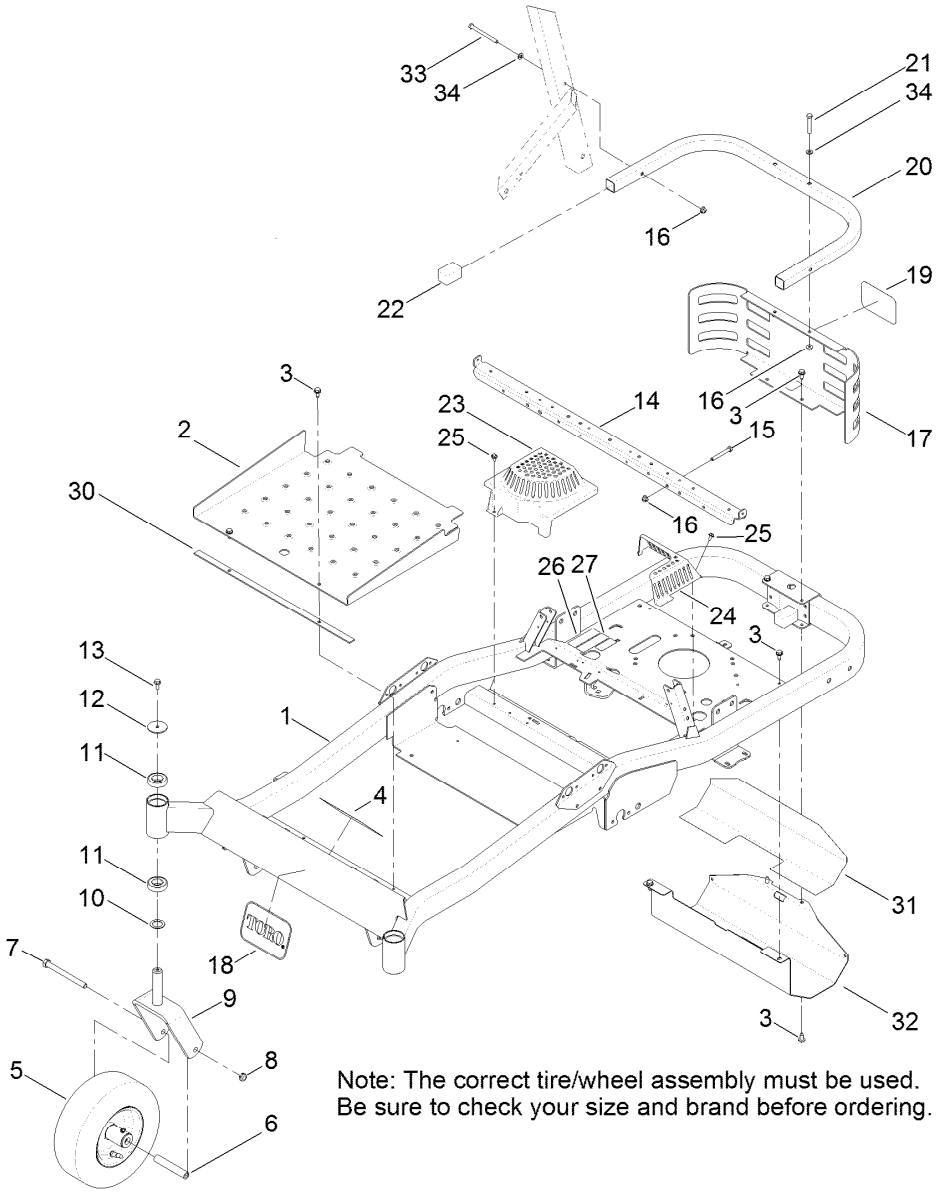

Note: The correct tire/wheel assembly must be used.
Be sure to check your size and brand before ordering.

Frame, Front Axle and Caster Wheel Assembly

Ref.	Part Number	Qty.	Description
1	117-7356-01	1	Frame ASM
2	115-2531-05	1	Pan-Floor
3	32144-70	8	Screw-HWHTF
4	120-5466	1	Decal-Safety
5	125-1822	2	Tire And Wheel ASM (Cst)
5	115-2554	2	Tire And Wheel ASM (Kenda)
6	104-3667	2	Spanner-Wheel
7	325-22	2	Screw-HH
8	3296-45	2	Nut-Lock, NI
9	110-6634-01	2	Caster Fork ASM
10	10-8110	2	Washer-Thrust
11	109-3678	4	Bearing-Ball
12	109-3724	2	Washer
13	3234-47	2	Screw-HHF
14	119-8997-03	1	Support-Seat
15	322-12	2	Screw-HH

Ref.	Part Number	Qty.	Description
16	104-8300	6	Nut-Flange, NI
17	120-2248-03	1	Guard-Rear
18	62-5550	1	Decal
19	105-8278	1	Decal
20	121-0704-01	1	Tube-Guard
21	322-10	2	Screw-HH
22	121-2980	2	Cap
23	117-1241	1	Cover-Fan, RH
24	117-1242	1	Cover-Fan, LH
25	46-8560	2	Screw-HHFTF
26	119-8995	1	Decal-Serial
27	121-3279	1	Decal-Emissions, Epa
30	117-7238	1	Strip-Vibration, Anti
31	117-7220	1	Foil-Heat Shield
32	120-2247-03	1	Guard-Muffler
33	322-23	2	Screw-HH
34	3256-23	4	Washer-Flat

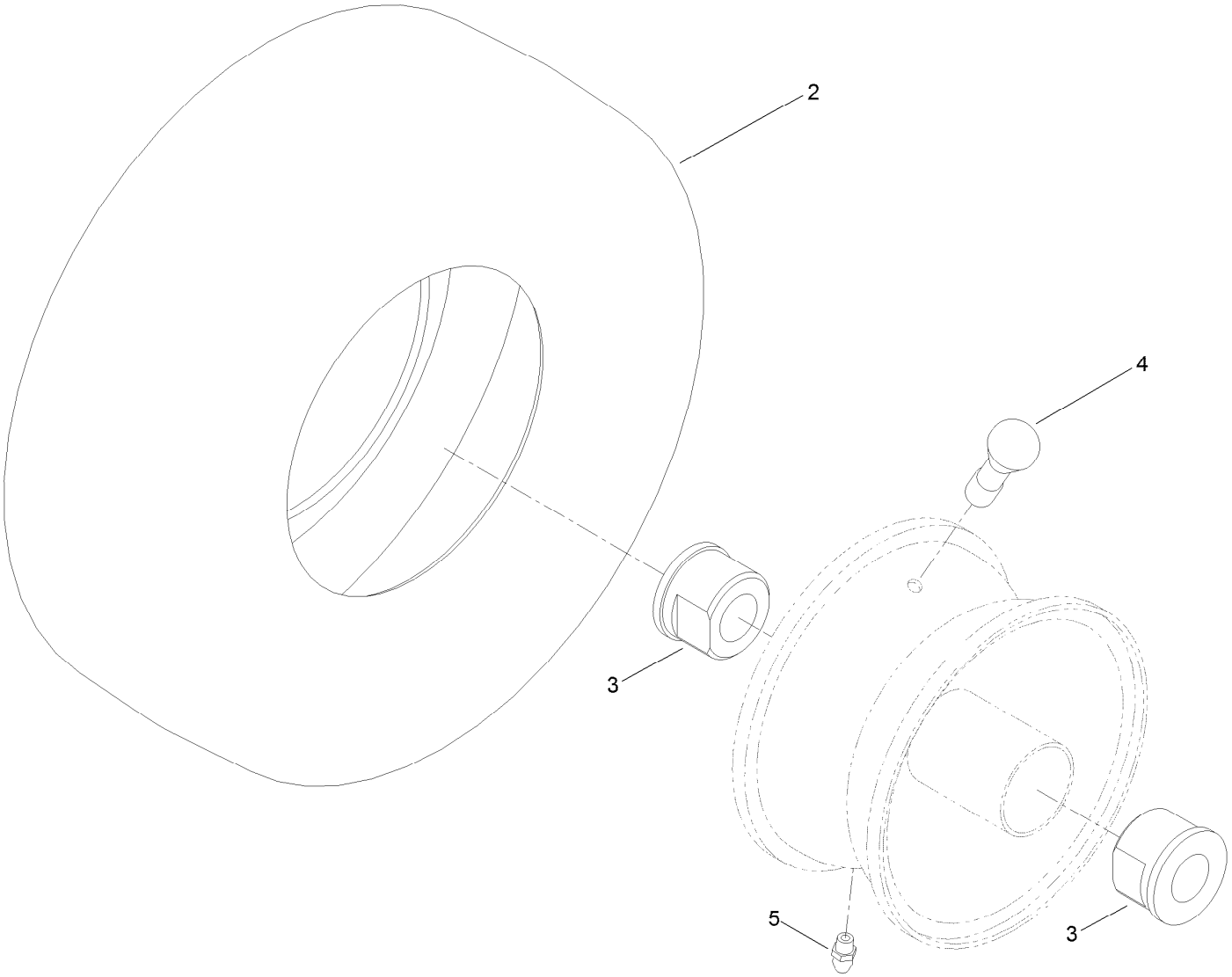

Wheel and Tire Assembly No. 125-1822

Ref.	*Part Number*	*Qty.*	*Description*
2	125-1823	1	Tire
3	114-1640	2	Bushing-Flange
4	232-27	1	Stem-Valve
5	302-5	1	Fitting-Grease
99	117-1234	1	Tube-Inner

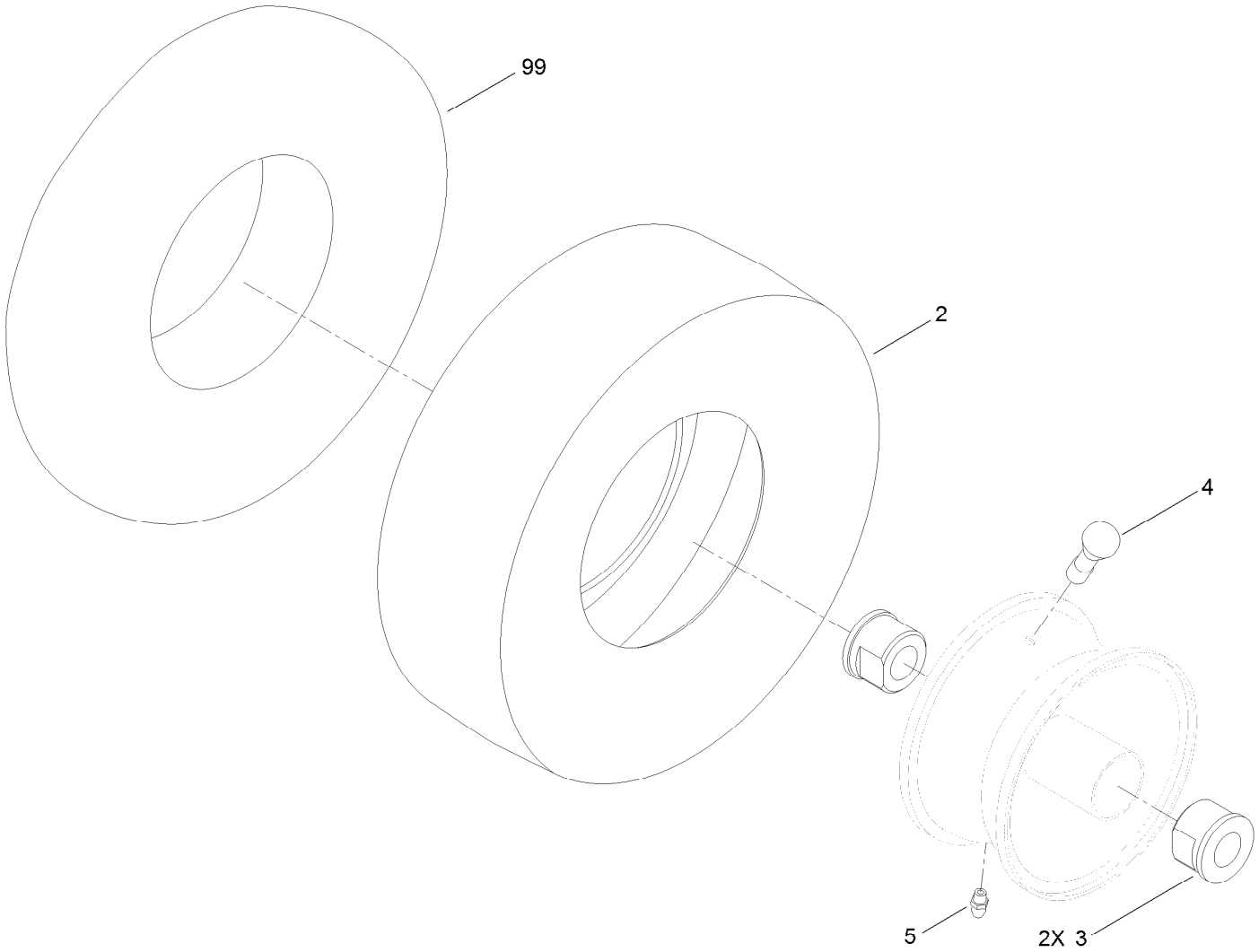

Wheel and Tire Assembly No. 115-2554

Ref.	*Part Number*	*Qty.*	*Description*
2	115-2557	1	Tire-Smooth
3	114-1640	2	Bushing-Flange
4	232-27	1	Stem-Valve
5	302-5	1	Fitting-Grease
99	117-1234	1	Tube-Inner

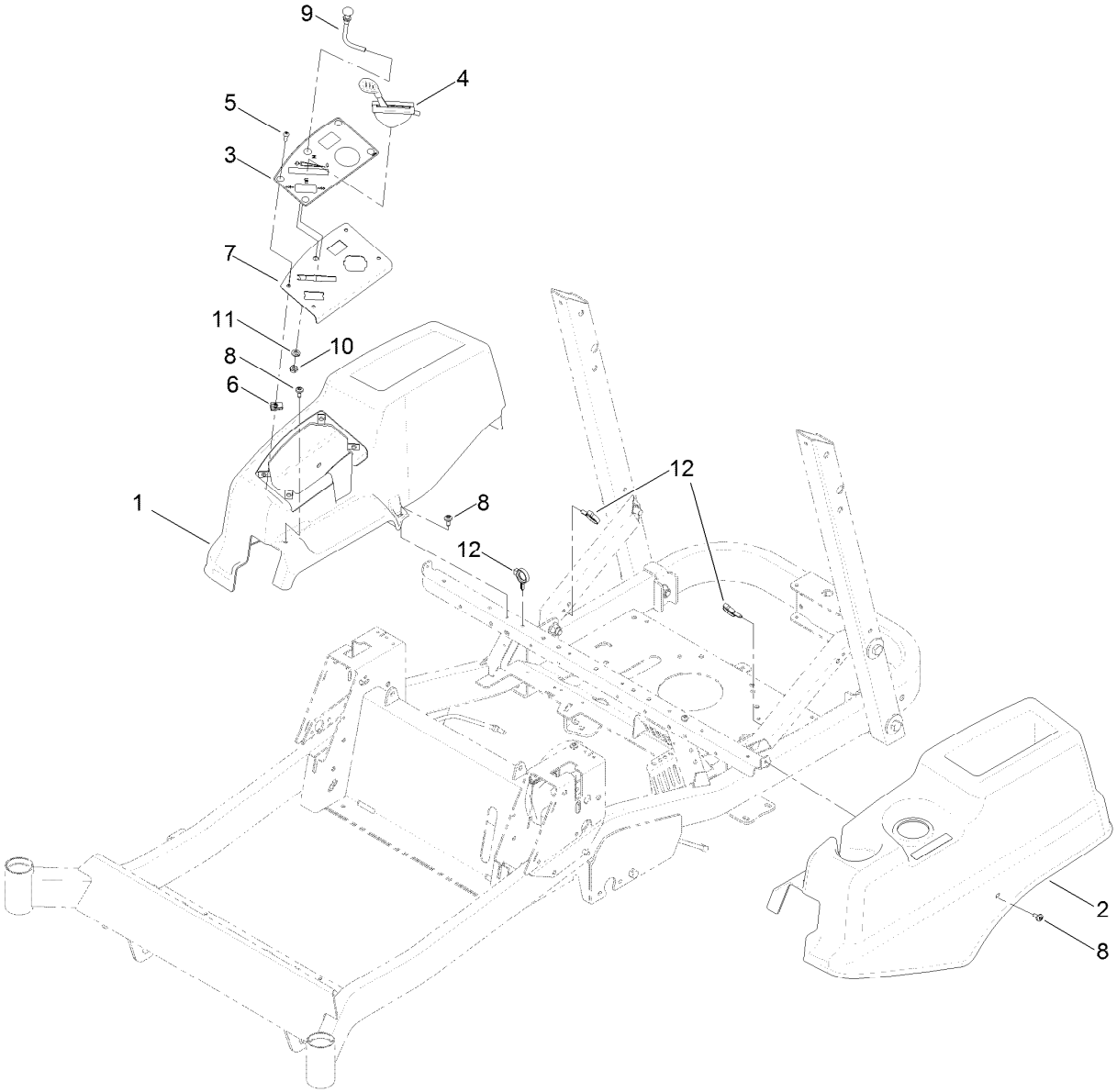

Control Panel and Body Styling Pod Assembly

Ref.	*Part Number*	*Qty.*	*Description*
1	115-2581	1	Pod-RH
2	115-2582	1	Pod-LH
3	115-9632	1	Decal-Panel, Control
4	121-0770	1	Cable-Throttle
5	3258-166	4	Screw-PRH
6	107069	4	Clip
7	115-2591-03	1	Panel-Control
8	120-7950	6	Screw-Shoulder
9	120-2291	1	Cable-Choke
10	3253-21	1	Washer-Lock
11	3220-3	1	Nut-HJ
12	105-1853	2	Clamp-Hose

Traction Drive Assembly

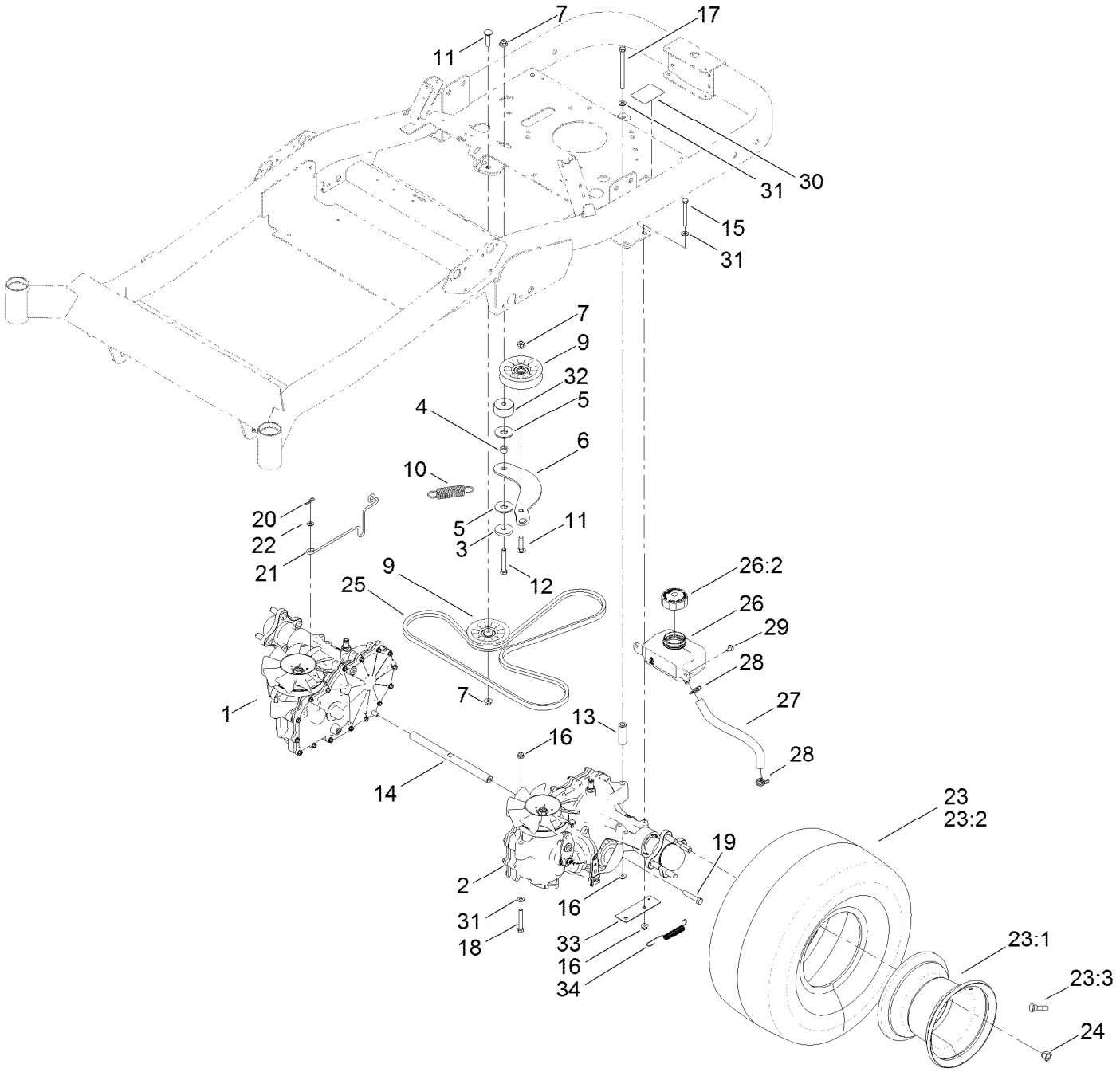

Traction Drive Assembly (continued)

Ref.	Part Number	Qty.	Description
1	115-2550	1	RH Hydro Transmission ASM
2	115-2551	1	LH Hydro Transmission ASM
3	110-9981	1	Washer-Plain
4	115-4986	1	Spacer
5	114-0463	2	Washer-Friction, Composite
6	117-5350	1	Arm-Idler
7	104-8301	3	Nut-Flange, NI
9	109-3397	2	Pulley-Idler, Flat
10	1-603402	1	Spring-Extension
11	3231-4	2	Screw-CARR
12	323-12	1	Screw-HH
13	109-3652	2	Spacer-Hydro
14	115-2559	1	Shaft-Cross, Hydro
15	322-13	4	Screw-HH
16	104-8300	8	Nut-Flange, NI
17	322-38	2	Screw-HH
18	322-11	2	Screw-HH
19	323-10	2	Screw-HH
20	1-806003	2	Pin-Cotter, Hair
21	115-4990	2	Rod-Bypass
22	3256-22	2	Washer-Flat
23	109-5268	2	Wheel And Tire ASM
23:1	109-5270	1	Wheel
23:2	109-5269	1	Tire
23:3	232-27	1	Stem-Valve
23:4	93-3893	1	Tube-Inner
24	242-50	8	Nut-Lug
25	115-9613	1	V-Belt
26	115-9618	1	HYD Reservior ASM
26:2	109-3320	1	Cap-Reservoir, HYD
27	115-4969	2	Hose-Overflow
28	117-1193	4	Clamp-Hose
29	46-8560	2	Screw-HHFTF
30	117-1158	2	Decal-Bypass
31	3256-23	8	Washer-Flat
32	117-5351	1	Spacer
33	117-7248-03	2	Plate-Spring
34	110769	2	Spring-Extension

RH Hydro Assembly No. 115-2550

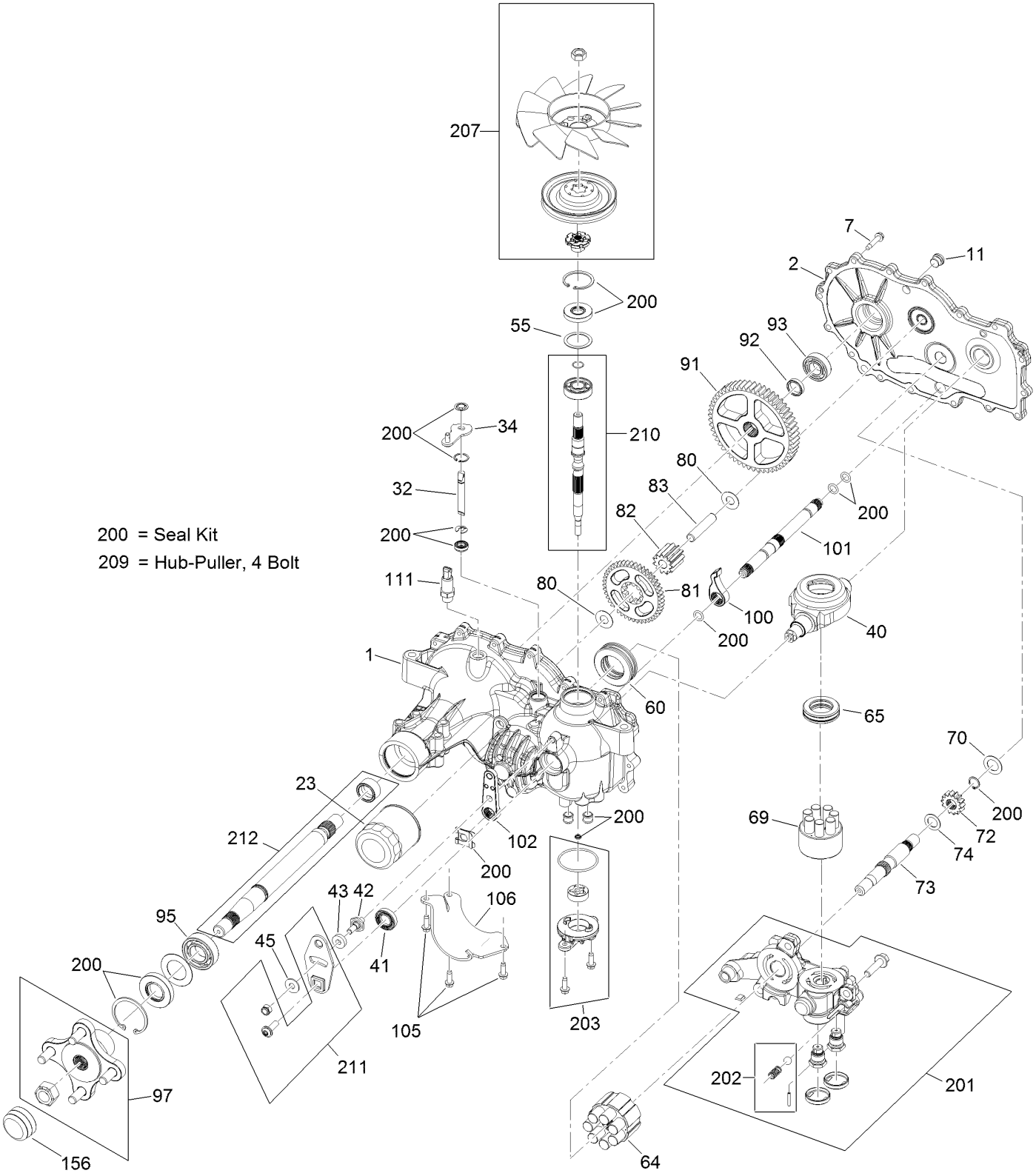

RH Hydro Assembly No. 115-2550 (continued)

Ref.	Part Number	Qty.	Description
1	117-5357	1	RH Main Housing Kit
2	117-5358	1	Housing Side Kit
7	117-5359	16	Screw-HHF
11	104-2189	1	Plug-Thread, Straight
23	109-3321	1	Element-Oil Filter, HYD
32	114-1685	1	Rod-Bypass
34	107-2490	1	Arm-Bypass
40	104-5304	1	Swashplate-Trunnion
41	104-5313	1	Seal-Lip
42	104-2116	1	Stud
43	112-9853	1	Puck-Friction
45	114-8491	1	Washer
55	104-5308	1	Spacer
60	112-4154	1	Bearing-Thrust
64	114-1689	1	Motor Cylinder Block Kit
65	94-6922	1	Bearing-Thrust
69	110-8561	1	Pump Block ASM
70	104-5339	1	Washer-Flat
72	114-1690	1	Gear-14T
73	114-1691	1	Shaft-Motor
74	104-5360	1	Washer
80	94-1933	1	Washer
81	114-1692	1	Gear-45T
82	114-1693	1	Gear-11T
83	104-5329	1	Pin-Jackshaft
91	114-1694	1	Gear-54T
92	120-7975	1	Spacer
93	114-1696	1	Bearing-Ball
95	120-7976	1	Bearing-Ball
97	109-5939	1	Hub Kit
100	114-1697	1	Pawl-Brake
101	120-7977	1	Brake Shaft Kit
102	125-0021	1	Handle-Brake
105	104-2120	3	Screw
106	120-7981	1	Guard-Filter, RH
111	109-3278	1	Adapter-Straight
156	115-5057	1	Cover-Nut, Axle
200	109-3537	1	Complete Seal Kit
201	114-8463	1	RH Center Section Kit
202	114-8464	1	Charge Relief Kit
203	114-8465	1	Charge Kit
207	125-0059	1	Kit, Fan And Pulley
209	114-8467	1	Hub-Puller, 4 Bolt
210	117-5361	1	Shaft Input Kit
211	117-5362	1	Arm Control Kit
212	114-8470	1	Axle Shaft Kit

LH Hydro Assembly No. 115-2551

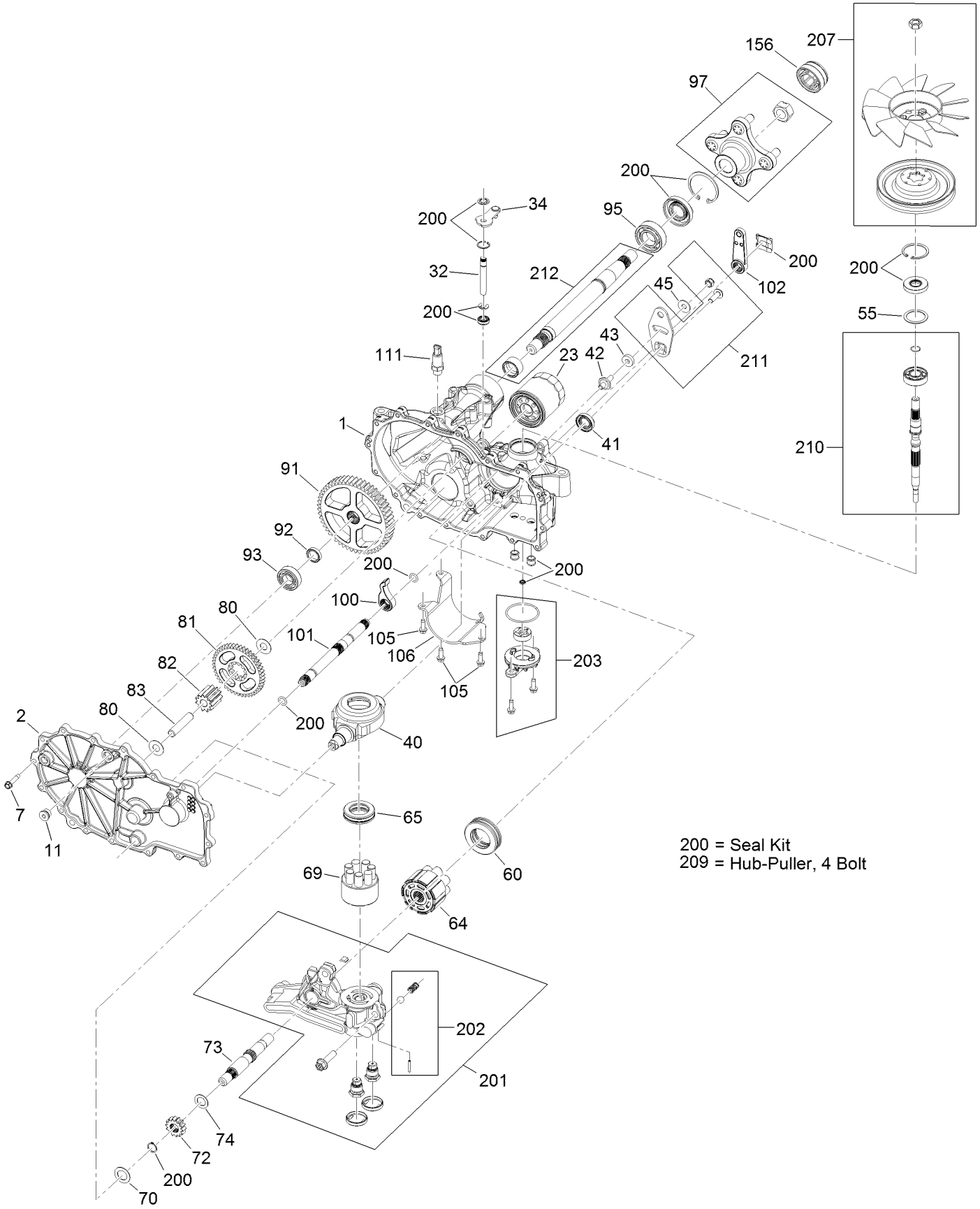

LH Hydro Assembly No. 115-2551 (continued)

Ref.	Part Number	Qty.	Description
1	114-8471	1	Main Housing Kit
2	114-8472	1	Side Cover Kit
7	117-5359	16	Screw-HHF
11	104-2189	1	Plug-Thread, Straight
23	109-3321	1	Element-Oil Filter, HYD
32	114-1685	1	Rod-Bypass
34	107-2490	1	Arm-Bypass
40	104-5304	1	Swashplate-Trunnion
41	104-5313	1	Seal-Lip
42	104-2116	1	Stud
43	112-9853	1	Puck-Friction
45	114-8491	1	Washer
55	104-5308	1	Spacer
60	114-1688	1	Bearing-Thrust
64	114-1689	1	Motor Cylinder Block Kit
65	94-6922	1	Bearing-Thrust
69	110-8561	1	Pump Block ASM
70	104-5339	1	Washer-Flat
72	114-1690	1	Gear-14T
73	114-1691	1	Shaft-Motor
74	104-5360	1	Washer
80	94-1933	2	Washer
81	114-1692	1	Gear-45T
82	114-1693	1	Gear-11T
83	104-5329	1	Pin-Jackshaft
91	114-1694	1	Gear-54T
92	120-7975	1	Spacer
93	114-1696	1	Bearing-Ball
95	120-7976	1	Bearing-Ball
97	109-5939	1	Hub Kit
100	114-1697	1	Pawl-Brake
101	120-7977	1	Brake Shaft Kit
102	125-0021	1	Handle-Brake
105	104-2120	3	Screw
106	120-7979	1	Guard-Filter, LH
111	109-3278	1	Adapter-Straight
156	115-5057	1	Cover-Nut, Axle
200	109-3537	1	Complete Seal Kit
201	114-8476	1	LH Center Section Kit
202	114-8464	1	Charge Relief Kit
203	114-8465	1	Charge Kit
207	125-0059	1	Kit, Fan And Pulley
209	114-8467	1	Hub-Puller, 4 Bolt
210	117-5361	1	Shaft Input Kit
211	117-5362	1	Arm Control Kit
212	114-8470	1	Axle Shaft Kit

Motion Control Assembly

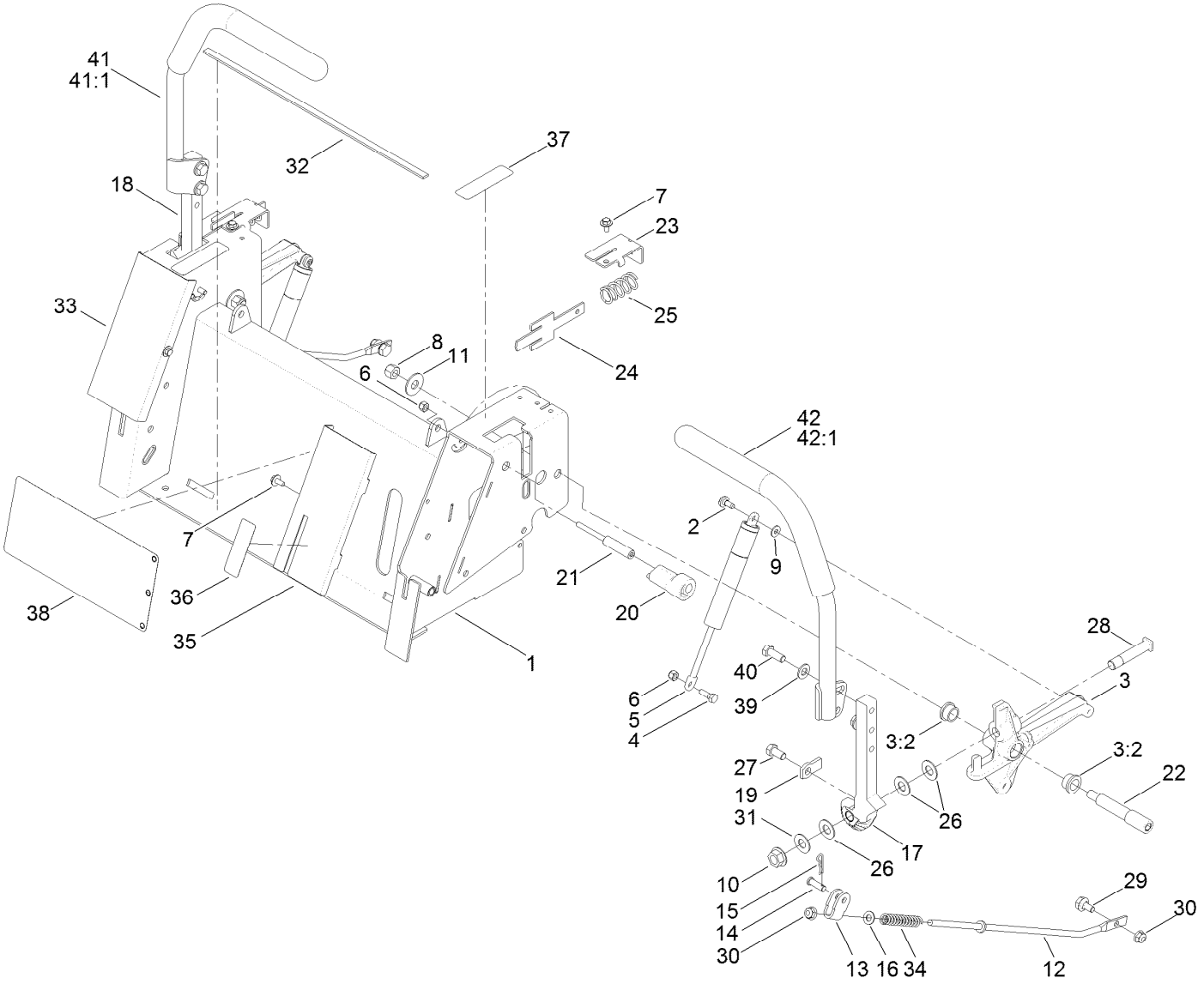

Motion Control Assembly (continued)

Ref.	Part Number	Qty.	Description
1	115-2546-03	1	Box-Control
2	120-7950	2	Screw-Shoulder
3	110-6828	2	Activator Arm ASM
3:2	105-3455	2	Bushing
4	106-2214	2	Bolt-Shoulder
5	109-2339	2	Damper-Control, Motion
6	3296-42	4	Nut-Lock, NI
7	46-8560	4	Screw-HHFTF
8	3296-48	2	Nut-Lock, NI
9	119-8952	2	Washer
10	32128-23	2	Nut-HF
11	3256-5	2	Washer-Flat
12	117-7422	2	Rod-Control
13	117-7423	2	Bracket-Control
14	1-808280	2	Pin-Clevis
15	1-806003	2	Pin-Cotter, Hair
16	3256-23	2	Washer-Flat
17	110-6783-05	1	Arm-Actuator, LH
18	110-6782-05	1	Arm-Actuator, RH
19	115-5023	2	Tab-Stop
20	110-6873	2	Eccentric
21	110-6874	2	Screw-Eccentric
22	110-6875	2	Bolt-Shoulder

Ref.	Part Number	Qty.	Description
23	110-6751	2	Bracket-Return
24	110-6750	2	Plate-Return
25	110-6752	2	Spring-Compression
26	110-6894	6	Washer-Pivot
27	323-4	2	Screw-HH
28	110-6784	2	Bolt-Shoulder
29	37-8771	2	Bolt-Shoulder
30	104-8300	4	Nut-Flange, NI
31	112-9771	2	Washer-Teflon
32	117-7237	1	Strip-Vibration, Anti
33	117-1255-03	1	Cover-Control, RH
34	1-603807	2	Spring-Return, Neutral
35	115-2561-03	1	Cover-Control, LH
36	115-9625	1	Decal
37	99-8936	2	Decal-Control, Motion
38	119-8986	1	Decal
39	3256-24	4	Washer-Flat
40	323-6	4	Screw-HH
41	121-0731	1	Handle-Control, RH
41:1	121-0726	1	Grip
42	121-0730	1	Handle-Control, LH
42:1	121-0726	1	Grip

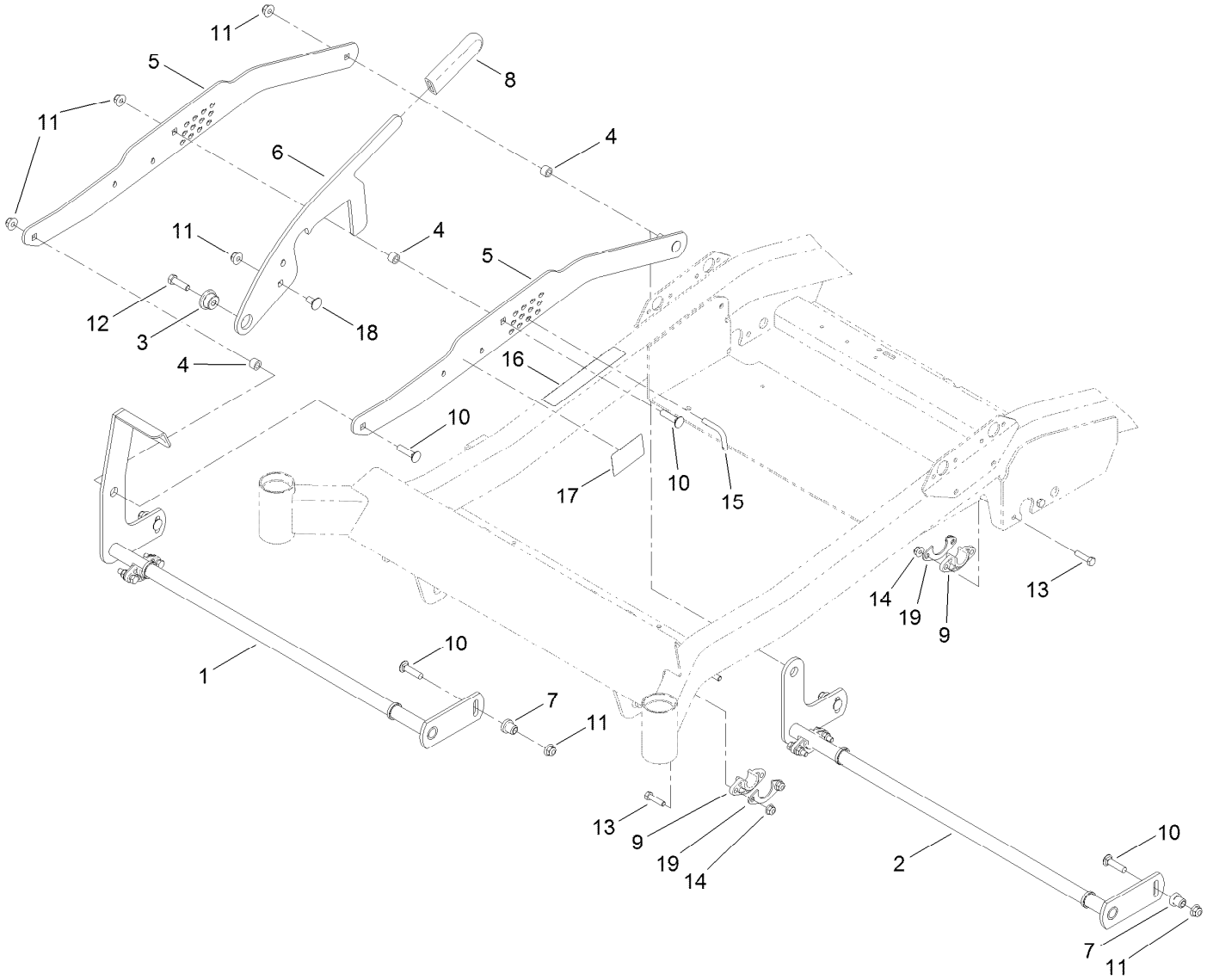

Deck Lift Assembly

Ref.	Part Number	Qty.	Description
1	115-2495-03	1	Pivot-Front
2	115-2498-03	1	Pivot-Rear
3	117-1281	1	Bushing-Mount, HOC
4	115-4986	3	Spacer
5	115-2503-03	2	Plate-Lift, Foot
6	115-2504	1	Plate-Stop, HOC
7	65-5950	4	Bushing-Pulley
8	1-633268	1	Grip-Lever
9	115-5065	4	Bushing-Flange
10	3231-4	7	Screw-CARR

Ref.	Part Number	Qty.	Description
11	104-8301	8	Nut-Flange, NI
12	323-7	1	Screw-HH
13	322-6	8	Screw-HH
14	104-8300	8	Nut-Flange, NI
15	117-1280	1	Pin-Keyed
16	115-9644	1	Decal-HOC
17	117-5344	1	Decal-Lock, Deck
18	3231-1	1	Screw-CARR
19	116-2887	4	Gusset-Deck Lift

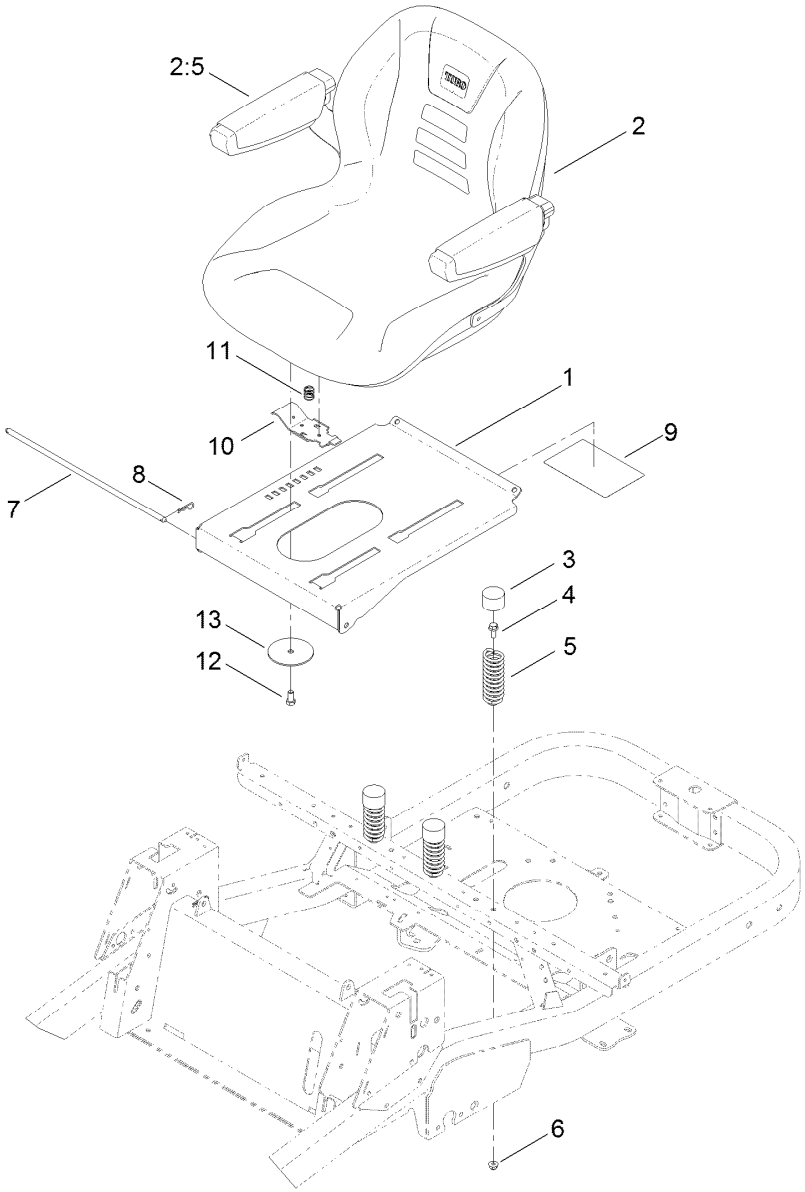

Seat Assembly

Ref.	Part Number	Qty.	Description
1	117-5320-03	1	Pan-Seat
2	115-5053	1	18 Inch Seat ASM
2:5	119-3307	1	Armrest Kit
3	701178	3	Cap-Protector
4	3234-47	3	Screw-HHF
5	92-7054	3	Spring-Compression
6	104-8300	3	Nut-Flange, NI
7	115-4966	1	Rod-Stop
8	3290-250	2	Pin-Hair
9	115-9630	1	Decal-Maintenance
10	115-9623	1	Latch-Seat
11	115-9624	1	Spring-Compression
12	323-4	1	Screw-HH
13	117-5307	1	Washer-Seat

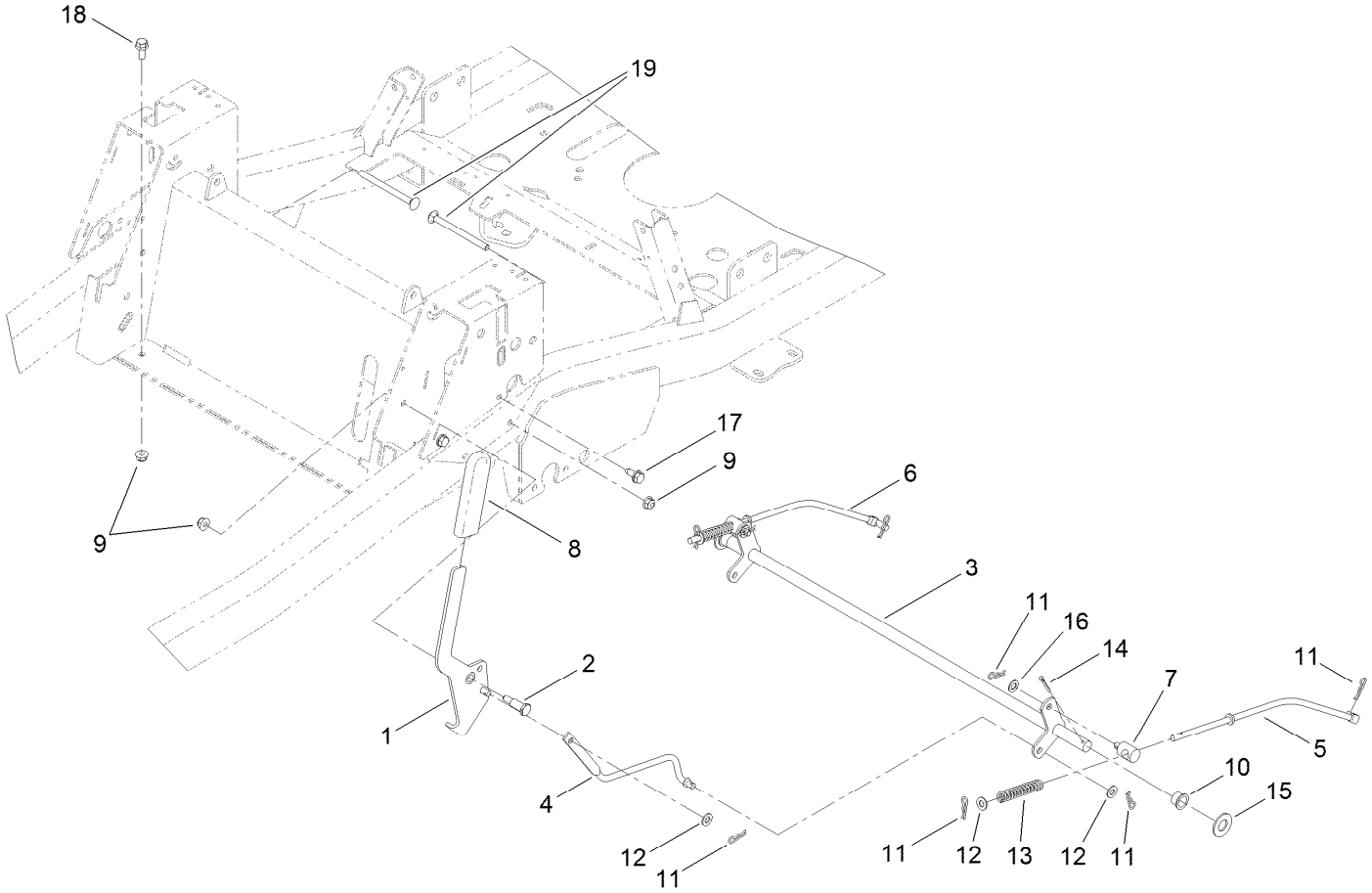

Brake Link Assembly

Ref.	Part Number	Qty.	Description
1	119-3460	1	Handle-Brake
2	63-2650	1	Screw-Shoulder
3	115-5071-03	1	Brake-Bellcrank
4	115-5074	1	Link-Brake
5	117-7322	1	Rod-Brake, LH
6	117-7323	1	Rod-Brake, RH
7	115-9681	2	Fitting-Rod
8	1-633268	1	Grip-Lever
9	104-8300	5	Nut-Flange, NI
10	256-292	2	Bushing-Flange, NI

Ref.	Part Number	Qty.	Description
11	1-806003	8	Pin-Cotter, Hair
12	3256-23	4	Washer-Flat
13	1-603807	2	Spring-Return, Neutral
14	3272-11	2	Pin-Cotter
15	3256-27	2	Washer-Flat
16	40-1940	2	Washer
17	32144-70	4	Screw-HWHTF
18	3234-47	2	Screw-HHF
19	106-9758	2	Screw-CARR

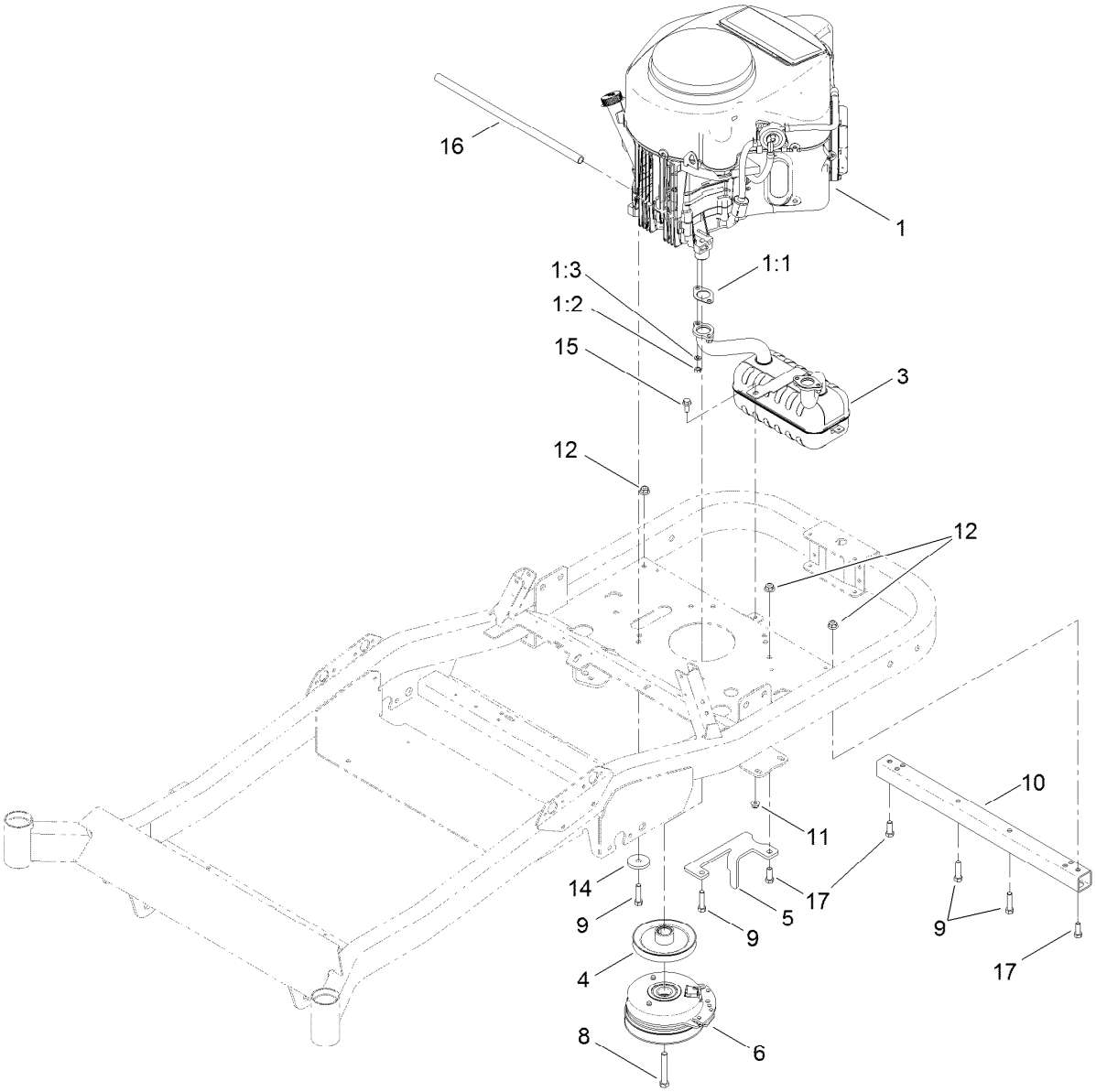

Engine, Muffler and Clutch Assembly

Ref.	Part Number	Qty.	Description
1		1	Engine Kawasaki, Fr691V-S50-R ●■
1:1	1-653313	2	Gasket-Exhaust
1:2	114-3549	4	Nut
1:3	114-3550	4	Washer-Lock, Spring
3	117-7465	1	Muffler-Kawasaki Twin
4	115-2568	1	Pulley-Engine
5	117-7344-03	1	Bracket-Stop, PTO
6	117-1252	1	Clutch-PTO

Ref.	Part Number	Qty.	Description
8	3212-11	1	Screw-HH
9	323-50	4	Bolt-HH
10	117-7335-03	1	Tube-Stiffener
11	104-8300	1	Nut-Flange, NI
12	104-8301	3	Nut-Flange, NI
14	110-9981	1	Washer-Plain
15	3234-47	1	Screw-HHF
16	106-7022	1	Tube-Drain, Oil
17	323-6	3	Screw-HH

● Not serviced separately

■ Obtain parts from www.kawpowerepc.com

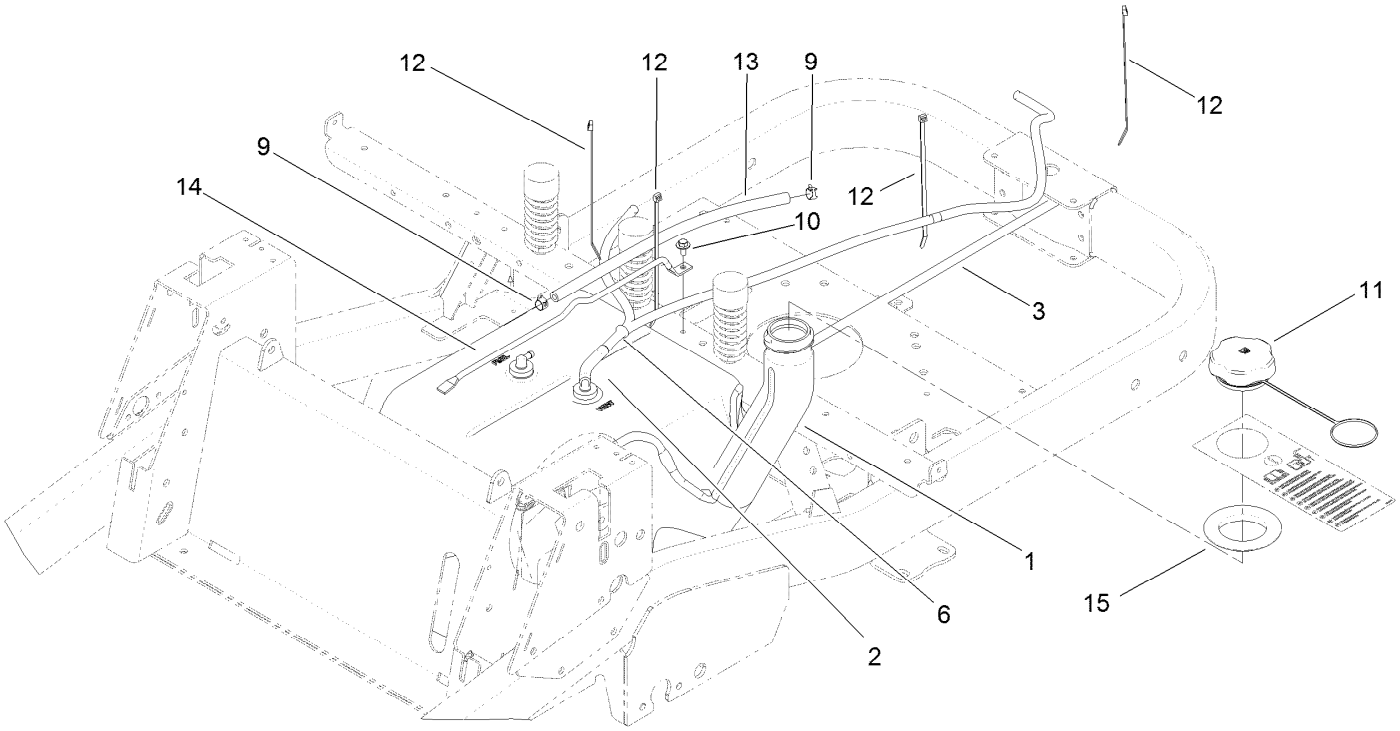

Fuel Delivery Assembly

Ref.	*Part Number*	*Qty.*	*Description*
1	117-7352	1	Multi Layer Fuel Tank ASM
2	114-3765	1	Hose-Fuel
3	51-3212	1	Hose-Fuel
6	121-0743	1	Adapter-Orifice
9	2412-98	2	Clamp-Hose
10	46-8560	1	Screw-HHFTF
11	125-1847	1	Cap-Fuel
12	614249	2	Tie-Cable
13	107-0589	1	Hose-Fuel
14	115-2620	1	Rod-Tank, Gas
15	117-1298	1	Seal-Tank

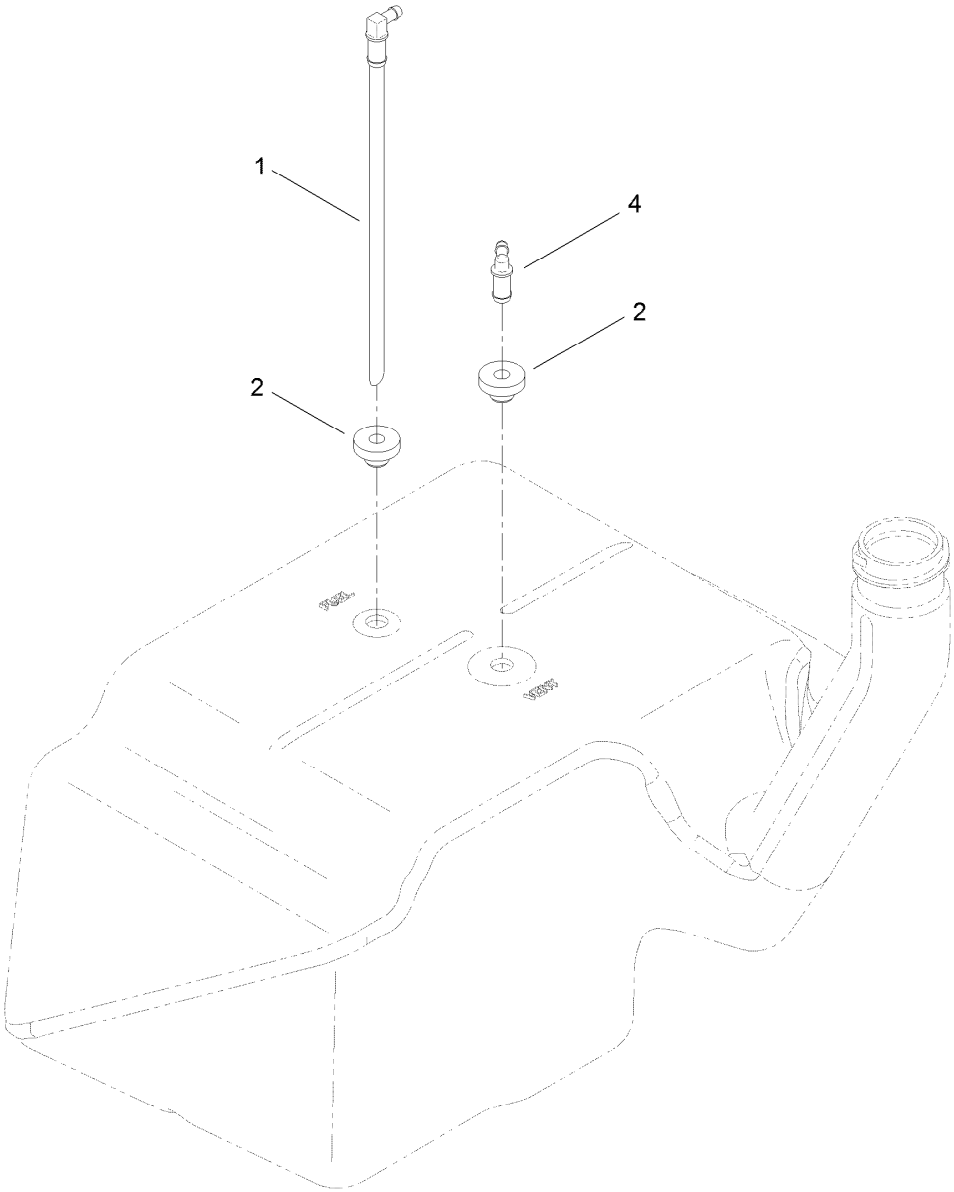

Multi Layer Fuel Tank Assembly No. 117-7352

Ref.	*Part Number*	*Qty.*	*Description*
1	121-0793	1	Connector-Elbow, 90 DEG
2	46-6560	2	Bushing
4	117-7400	1	Fitting-Plastic

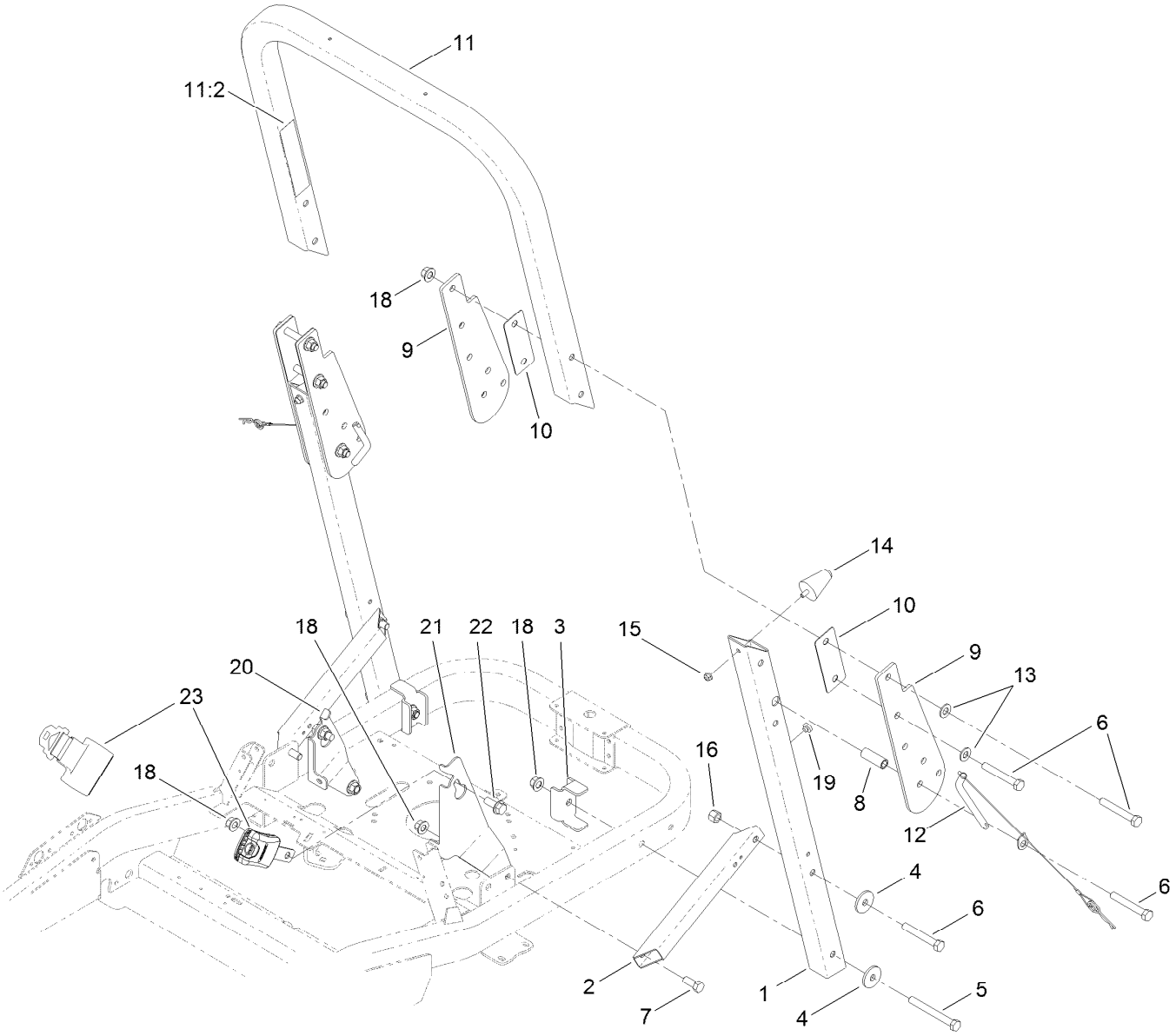

Roll-Over Protection System Assembly

Ref.	Part Number	Qty.	Description
1	121-2986-03	2	Tube-ROPS, Lower
2	115-4962-03	2	Tube-Support, ROPS
3	115-4963-03	2	Bracket-Reinforcing
4	84-1560	4	Washer-Thrust
5	325-18	2	Screw-HH
6	325-14	8	Screw-HH
7	325-5	2	Screw-HH
8	109-6653	2	Spacer
9	119-8911-03	4	Bracket-Pivot, ROPS
10	119-8926-03	4	Spacer-ROPS
11	119-8991	1	Upper ROPS ASM
11:2	107-3069	1	Decal-Warning, Folding ROPS

Ref.	Part Number	Qty.	Description
12	119-8970	2	Pin-ROPS
13	3256-26	4	Washer-Flat
14	114-1925	2	Bumper-Rubber
15	104-8300	2	Nut-Flange, NI
16	119-8969	2	Nut-Hex
18	99-5107	10	Nut-Lock
19	1-513658	2	Bumper
20	115-5038-03	1	Bracket-Seat Belt
21	115-5060-03	1	Bracket-Seat Belt
22	3234-38	2	Screw-HHF
23	109-9805	1	Seat Belt Kit

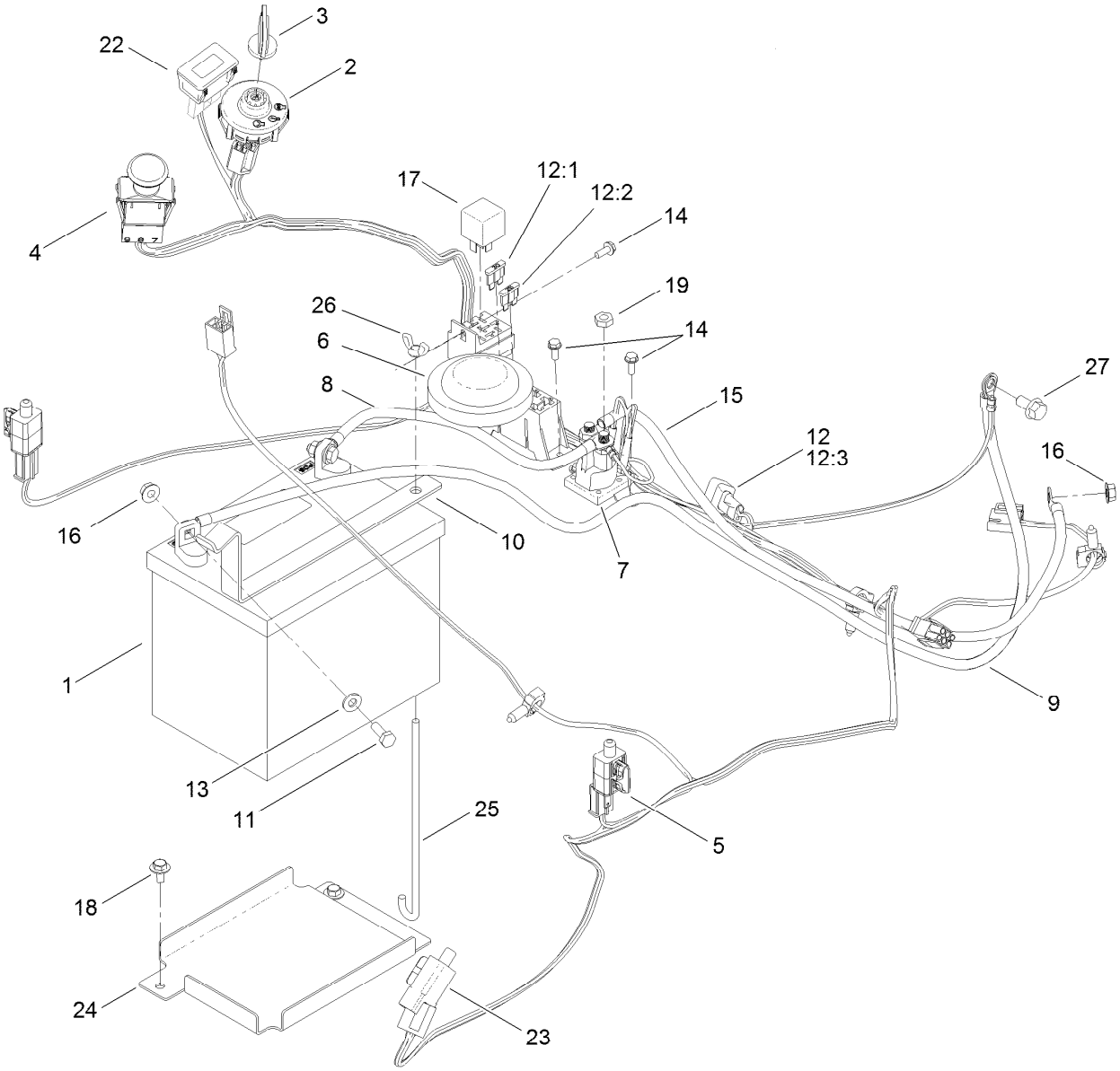

Electrical Assembly

Ref.	Part Number	Qty.	Description
1	105-1692	1	Battery
2	117-2221	1	Switch-Ignition
3	63-8360	1	Key-Ignition (W/Shield)
4	103-5221	1	Switch-PTO
5	110-6765	2	Switch-Single Pole No
6	100-3524	1	Switch-Seat
7	117-1197	1	Solenoid
8	117-5342	1	Cable-Battery, Positive
9	117-7240	1	Cable-Battery, Negative
10	117-7313-01	1	Strap-Battery
11	321-4	2	Screw-HH
12	121-3015	1	Harness-Wire
12:1	109103	1	Fuse-Blade, 30 Amp
12:2	109102	1	Fuse-Blade, 25 Amp

Ref.	Part Number	Qty.	Description
12:3	100-4918	1	Diode
13	3256-22	2	Washer-Flat
14	32144-1	5	Screw-Taptite
15	92-6989	1	Wire-21 Inch
16	32128-33	3	Nut-HF
17	98-7249	1	Relay
18	46-8560	2	Screw-HHFTF
19	3220-2	2	Nut-Jam
22	120-2244	1	Hourmeter
23	99-7408	1	Switch-Reverse
24	117-1283-03	1	Tray-Battery
25	1-633651	1	Bolt-Holddown
26	1-543792	1	Wingnut
27	33104-016	1	Screw-HHF

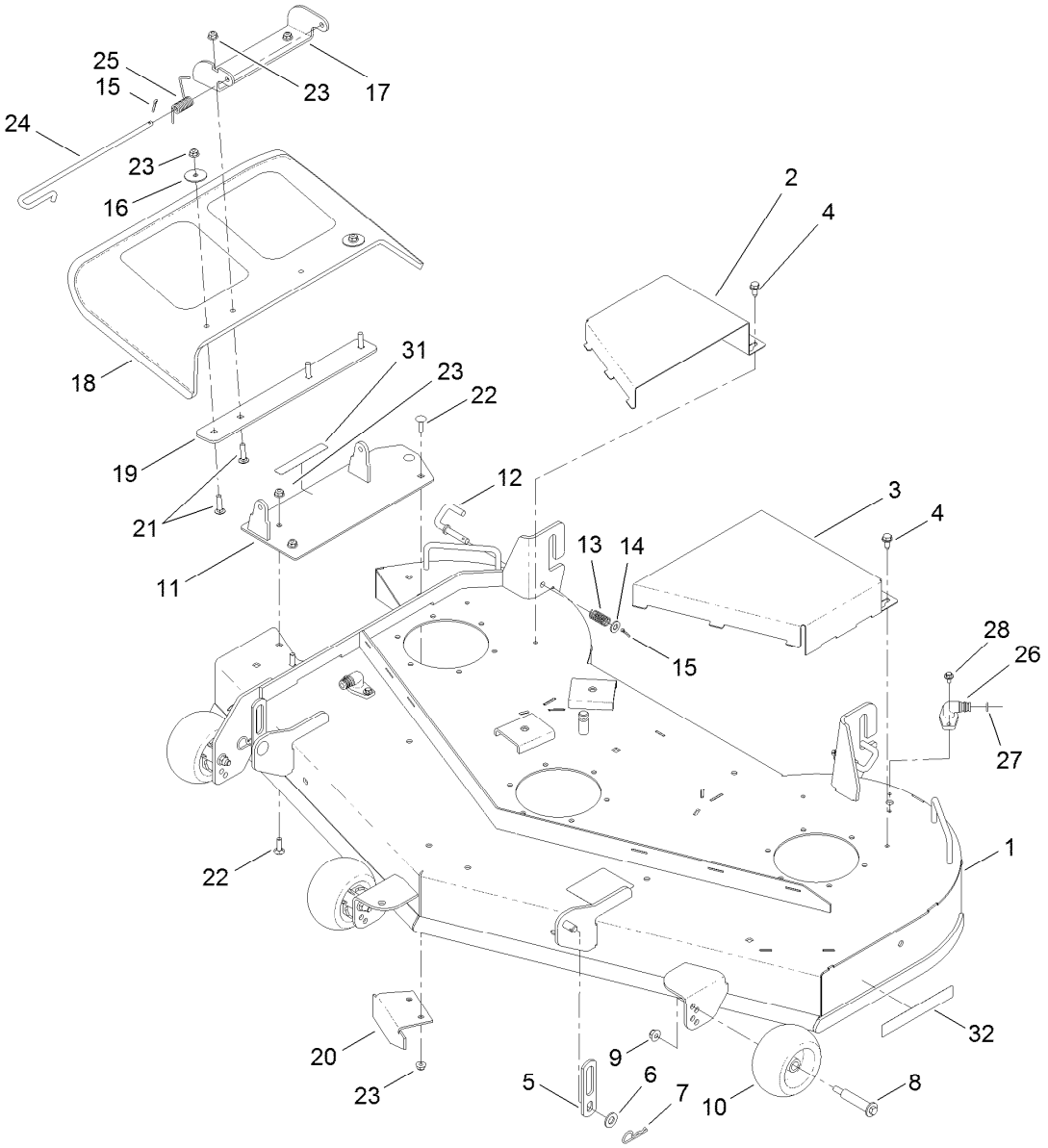

54 Inch Deck Assembly

Ref.	Part Number	Qty.	Description
1	117-5374	1	54 Inch Deck ASM
2	117-7404-03	1	Cover-Belt, RH
3	117-7405-03	1	Cover-Belt, LH
4	32144-70	4	Screw-HWHTF
5	115-2622	2	Link-Lift
6	3256-26	2	Washer-Flat
7	1-806005	2	Pin-Hair
8	112-3977	3	Bolt-Shoulder
9	104-8301	3	Nut-Flange, NI
10	1-603299	3	Roller-Scalp, Anti
11	117-1282-03	1	Plate-Cover
12	115-2470	2	Pin-Latch
13	101853	2	Spring-Compression
14	3256-24	2	Washer-Flat
15	3272-10	3	Pin-Cotter

Ref.	Part Number	Qty.	Description
16	3256-68	2	Washer-Flat
17	114-1648-03	1	Bracket-Deflector, Upper
18	117-1270	1	Deflector-Molded
19	115-5048-03	1	Plate-Deflector
20	115-9653-03	1	Baffle-Cutoff
21	3230-3	4	Screw-CARR
22	3230-22	4	Screw-CARR
23	104-8300	8	Nut-Flange, NI
24	109-8854	1	Pin-Chute
25	121-2983	1	Spring-Torsion
26	95-2747	2	Fitting-Washout
27	46-6290	2	O-Ring, Seal
28	46-8560	4	Screw-HHFTF
31	93-7009	1	Decal-Danger, Deflector
32	119-2368	1	Decal-Recycler

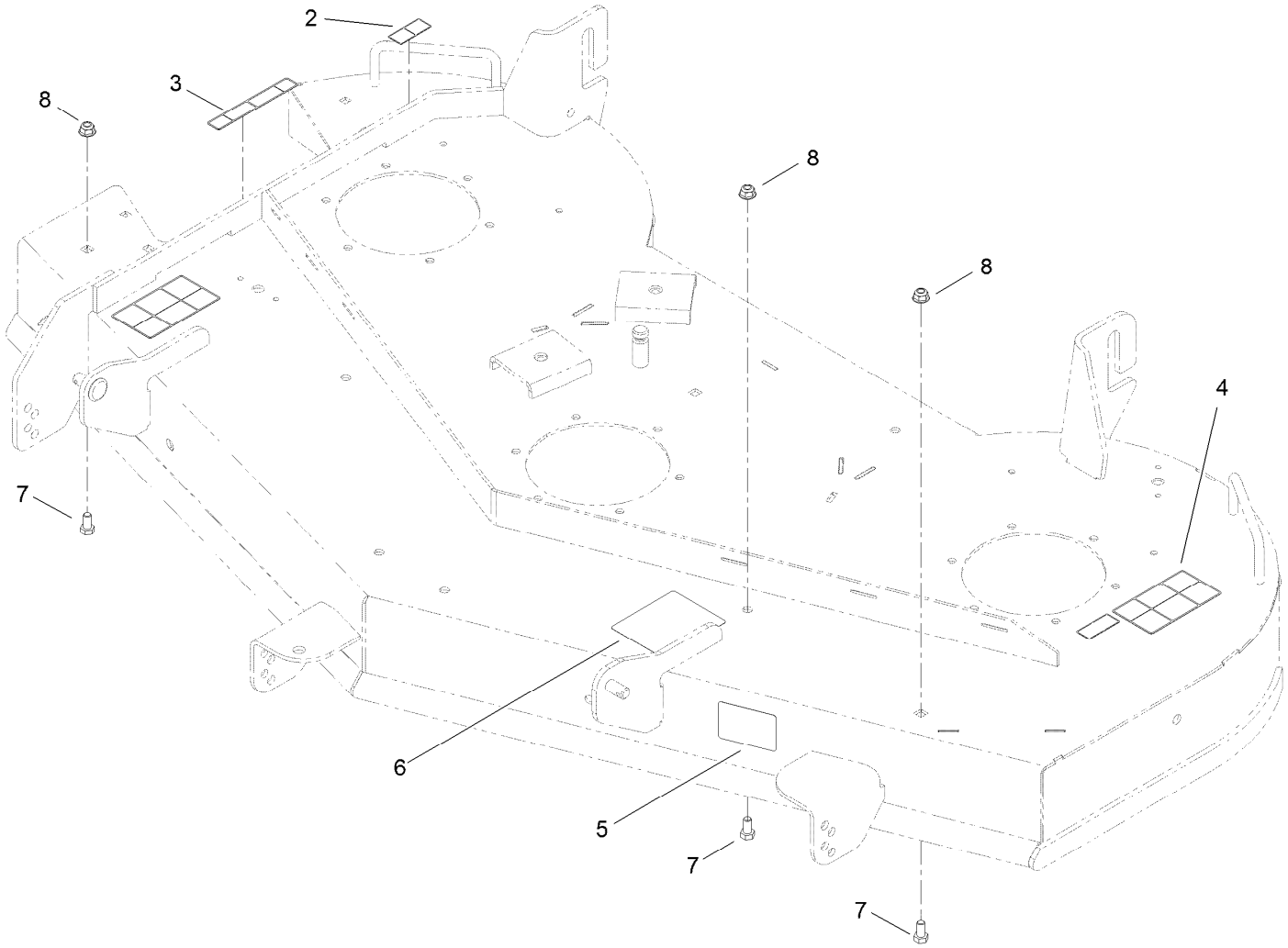

54 Inch Deck and Decal Assembly No. 117-5374

Ref.	*Part Number*	*Qty.*	*Description*
2	114-1606	2	Decal-Danger, Pulley
3	93-7009	1	Decal-Danger, Deflector
4	110-6691	2	Decal-Danger
5	112-9840	1	Decal-Scalp, Anti
6	117-1194	1	Decal-Routing, Belt
7	322-2	3	Screw-HH
8	104-8300	3	Nut-Flange, NI

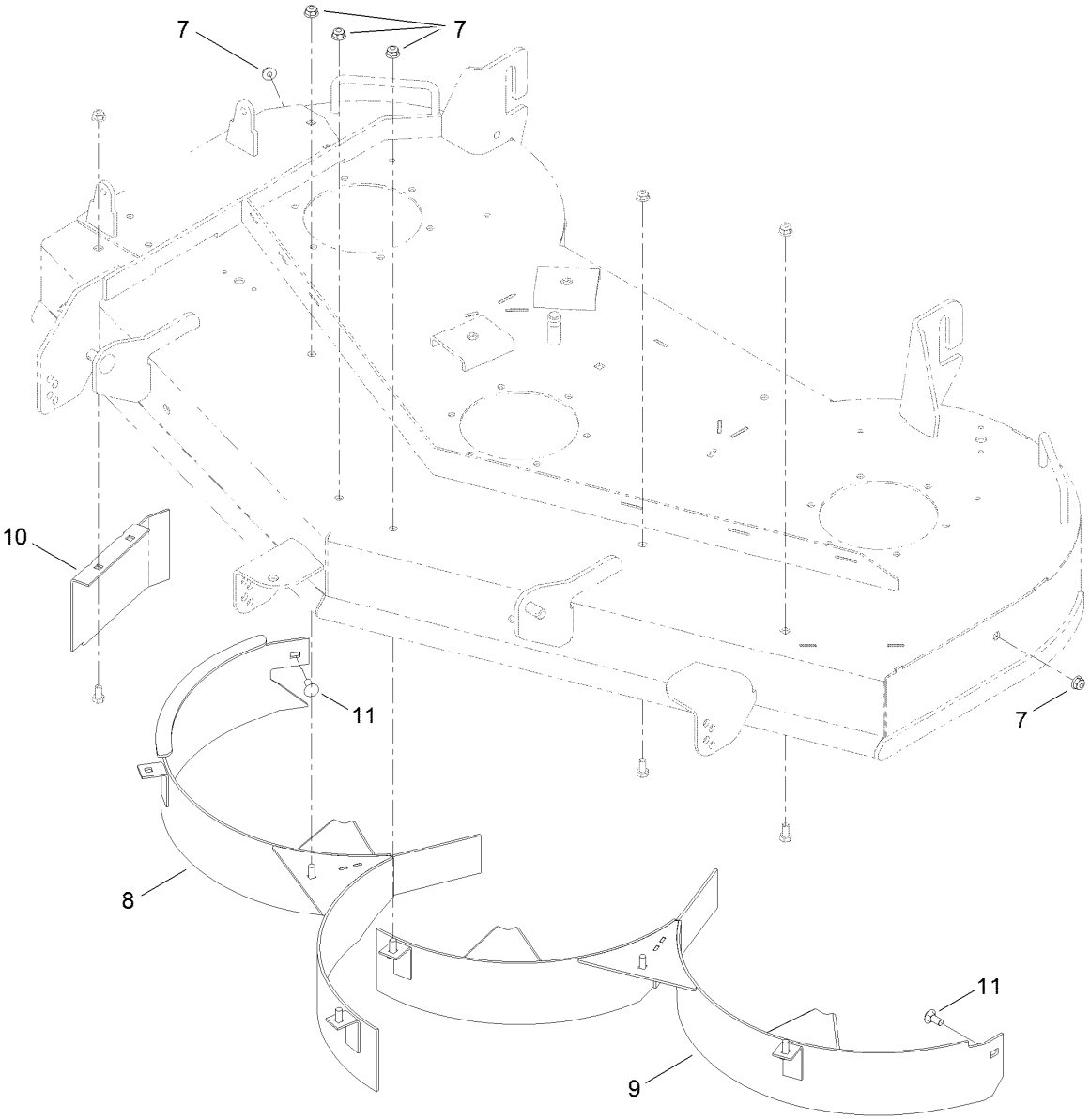

54 Inch Deck Baffle and Guard Assembly

Ref.	*Part Number*	*Qty.*	*Description*
7	104-8300	5	Nut-Flange, NI
8	115-9673-03	1	Baffle-Recycler, RH
9	115-9674-03	1	Baffle-Recycler, LH
10	117-7213-03	1	Guard-Baffle
11	3230-1	2	Bolt-CARR

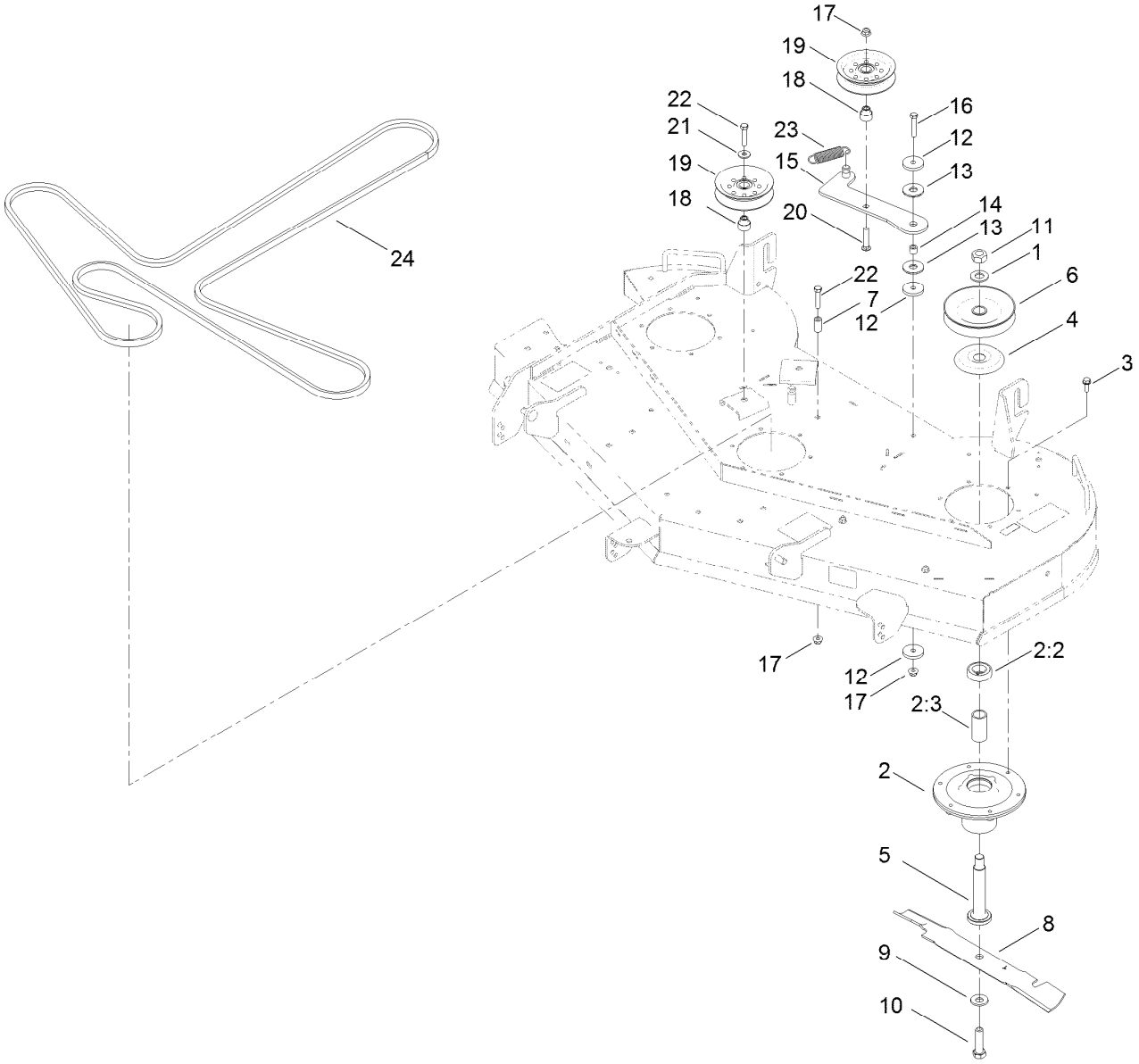

Deck, Belt and Mulch Blade Assembly

Ref.	Part Number	Qty.	Description
1	7-4150	3	Washer
2	120-5477	3	Spindle ASM
2:2	116-0720	2	Bearing-Ball
2:3	115-2641	1	Spacer-Bearing
3	32144-41	18	Screw-Taptite
4	117-7210	3	Shield-Bearing
5	115-2642	3	Shaft-Spindle
6	115-5018	3	Pulley
7	1-603401	1	Spacer-Fender
8	115-4999-03	3	Blade-Mulch, 18.75 Inch
9	125-1736	3	Washer-Belleville
10	51-4060	3	Screw-Blade
11	3219-7	3	Nut-Hex

Ref.	Part Number	Qty.	Description
12	110-9981	3	Washer-Plain
13	114-0463	2	Washer-Friction, Composite
14	1-413088	1	Bushing-Lever, Lift
15	115-5054	1	Idler Arm ASM
16	323-10	1	Screw-HH
17	104-8301	3	Nut-Flange, NI
18	115-2577	3	Bushing-Idler
19	116-3626	3	Pulley-Idler
20	3231-6	1	Screw-CARR
21	80-6990	2	Washer-Hardened
22	323-9	3	Screw-HH
23	108-4056	1	Spring-Extension
24	115-4971	1	V-Belt

Attachments and Accessories

For 74924 TITAN ZX5420 Zero-Turn-Radius Riding Mower

Product Name	Model/Part
Step Kit	117-5316
Light Kit	117-5317
54in/60in Striping Kit	117-5319
Leaf Bagging Enhancement Kit	117-7202
Transport Seat Hold Down Kit	117-7251
54in Bagger Finishing Kit, 2012 and After TITAN and TimeCutter MX Series Riding Mower	121-5663
Hitch Kit	79014
Bagger	79328

Notes:

Notes:

Notes:

TORO®

Count on it.