Form No. 3352-777 Rev B

TORO®

Count on it.

Parts Catalog

XL 380H

Lawn Tractor

Model No. 71428—Serial No. 250000001 and Up

Register at www.Toro.com.
Original Instructions (EN)

3352-777 B

Ordering Replacement Parts

To order replacement parts, please supply the part number, the quantity, and the description of each part desired.

Understanding Reference Numbers

Each identified part in an illustration has a reference number. The reference number for a part also appears in the parts list, along with other information about the part.

This catalog uses two special reference number formats, one to indicate parts in a service assembly and another to indicate the quantity of a given part in an illustration.

Service Assembly Reference Numbers

Parts in service assemblies have reference numbers in the form a:b. The a represents the reference number of the entire service assembly and the b represents a sequential number unique to each part within the service assembly.

For example, a wheel assembly might be identified by reference number 6, the tire by 6:1, the valve by 6:2, and the wheel by 6:3. When you order the assembly identified by reference number 6, you receive all parts identified by reference numbers 6:1,6:2, and 6:3. However, you may also order any part individually. Reference numbers of this type appear in illustration and in parts lists.

Reference Numbers Indicating Quantity

In an illustration, if a reference number indicates more than one part, the reference number has the form nX y. The n represents the quantity of the part, the X is the multiplication symbol, and the y represents the reference number.

For example, in an illustration, the reference number 2X 37 means that two of the parts identified by reference number 37 are indicated.

List of Abbreviations

AR: as required

ASM: assembly

BBC: blade brake control

BHTF: button head thread forming

CARR: carriage

CCW: counter clockwise

CW: clockwise

DEG: degrees

DPA: Dual Point Adjustment

ECM: electronic control module

EXT: external

FH: flat head

GA: gauge

HD: heavy-duty

HF: hex flange

HH: hex head

HHF: hex head flange

HHFTF: hex head flange thread forming

HJ: hex jam

HLH: hex lag head

HOC: height-of-cut

HSBH: hex socket button head

HSFH: hex socket flat head

HSH: hex socket head

HWH: hex washer head

HWHTF: hex washer head thread forming

HYD: hydraulic

LH: left hand

LP: Liquefied Petroleum Gas

LPG: Liquefied Petroleum Gas

NI: nylon insert

NPTF: national pipe thread fine

PFH: phillips flat head

PPH: phillips pan head

PPHTF: phillips pan head thread forming

PRH: phillips round head

PTH: phillips truss head

PTO: power-take-off

RH: right hand

ROPS: roll-over protection system

RRB: rear roller brush

SFH: slotted fillister head

SHH: slotted hex head

SHWH: slotted hex washer head

SPH: slotted pan head

SQH: square head

SRH: slotted round head

STD: standard

TAP: self tapping

TTH: torx truss head

Contents

Frame and Body Assembly . . . 4
Hood and Tower Assembly . . . 5
Rear Body and Seat Assembly . . . 6
Steering Assembly . . . 7
Fixed Steering Assembly . . . 8
Engine Assembly . . . 9
Traction Clutching Assembly . . . 10
Rear Wheel and Tire Assembly . . . 11
Hydro Transaxle Assembly . . . 12
Side Housing and Bearing Assembly Transaxle No. 104-1760 . . . 13
Gear Assembly Transaxle No. 104-1760 . . . 14
Main Housing and Bearing Assembly Transaxle No. 104-1760 . . . 15
Hydro Transaxle Control Assembly . . . 16
38in Deck Assembly . . . 17
38in Deck Blade Drive Assembly . . . 18
38in Deck Engagement Assembly . . . 19
Height-of-Cut Component Assembly . . . 20
Electrical Assembly . . . 21
Cylinder Assembly Briggs and Stratton 286H77-0165-E1 . . . 22
Cylinder Head Assembly Briggs and Stratton 286H77-0165-E1 . . . 23
Crankshaft Assembly Briggs and Stratton 286H77-0165-E1 . . . 24
Crankcase Assembly Briggs and Stratton 286H77-0165-E1 . . . 25
Oil Filter, Tube and Pump Assembly Briggs and Stratton 286H77-0165-E1 . . . 26
Carburetor Assembly Briggs and Stratton 286H77-0165-E1 . . . 27
Governor Assembly Briggs and Stratton 286H77-0165-E1 . . . 28
Blower Housing Assembly Briggs and Stratton 286H77-0165-E1 . . . 29
Starter Assembly Briggs and Stratton 286H77-0165-E1 . . . 30
Gasket Assembly Briggs and Stratton 286H77-0165-E1 . . . 31
Carburetor Overhaul Kit Briggs and Stratton 286H77-0165-E1 . . . 32
Attachments and Accessories . . . 33

© 2012—The Toro® Company
8111 Lyndale Avenue South
Bloomington, MN 55420

Contact us at www.Toro.com.
Printed in the USA.
All Rights Reserved

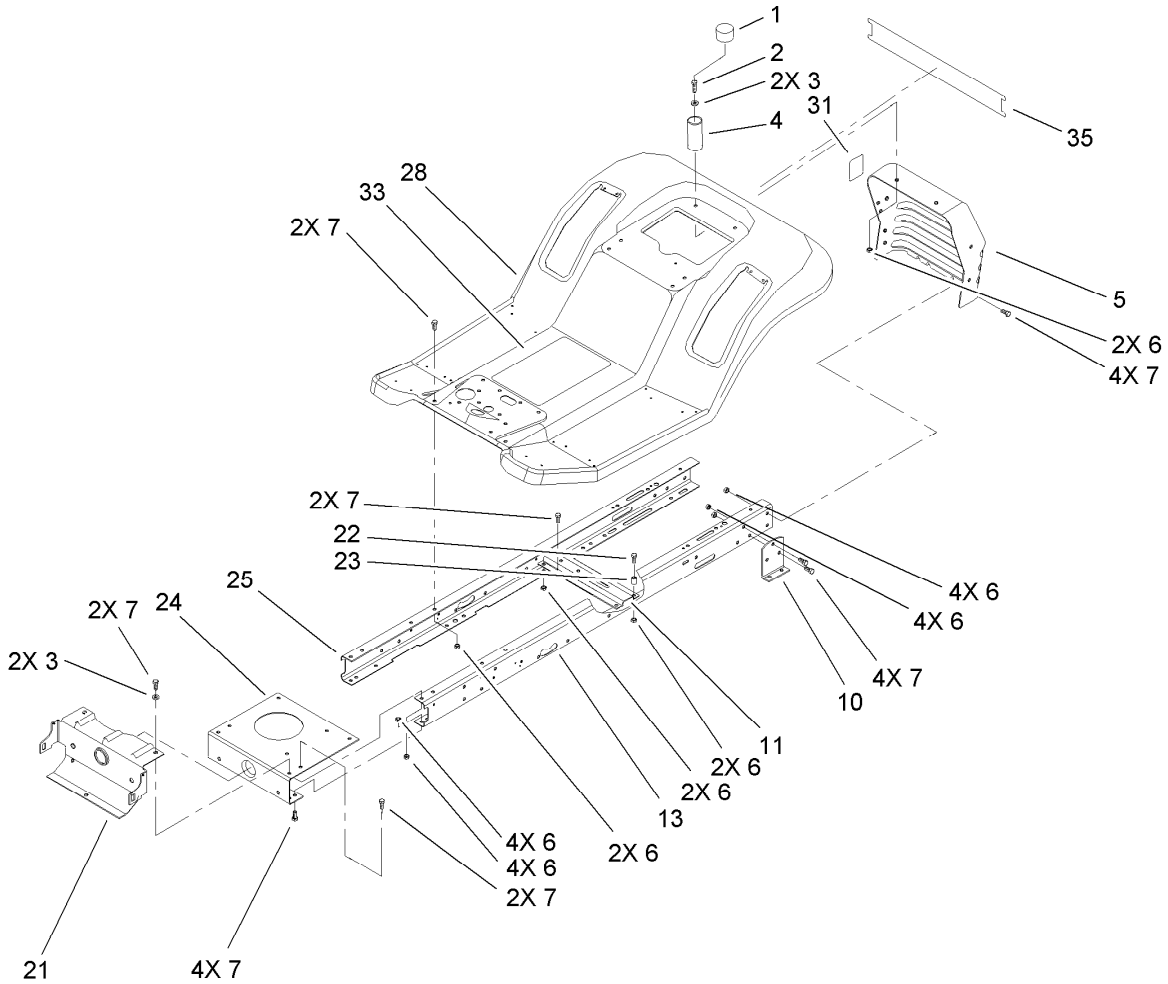

Frame and Body Assembly

Ref.	*Part Number*	*Qty.*	*Description*
1	701178	2	Cap-Protector
2	322-5	2	Screw-HH
3	3256-23	4	Washer-Flat
4	88-6220	2	Spring-Compression
5	99-2957-03	1	Support-Seat/Rear Hitch
6	3296-29	24	Nut-Lock, NI
7	322-3	20	Screw-HH
10	88-5260-03	2	Bracket-Transaxle, Mounting
11	88-4620-03	1	Bracket-Idler Pivot
13	99-2958-03	1	Rail-Frame, LH
21	98-3575-03	1	Support-Front, Axle
22	322-13	2	Screw-HH
23	88-5470	2	Spacer
24	88-4630-03	1	Plate-Mounting, Engine
25	99-2959-03	1	Rail-Frame, RH
28	99-2971	1	Rear Body ASM
31	100-7449	1	Decal-Valve, Dump
33	108-7817	1	Decal
35	105-2498	1	Decal-Rear Fender, Lawn Tractors

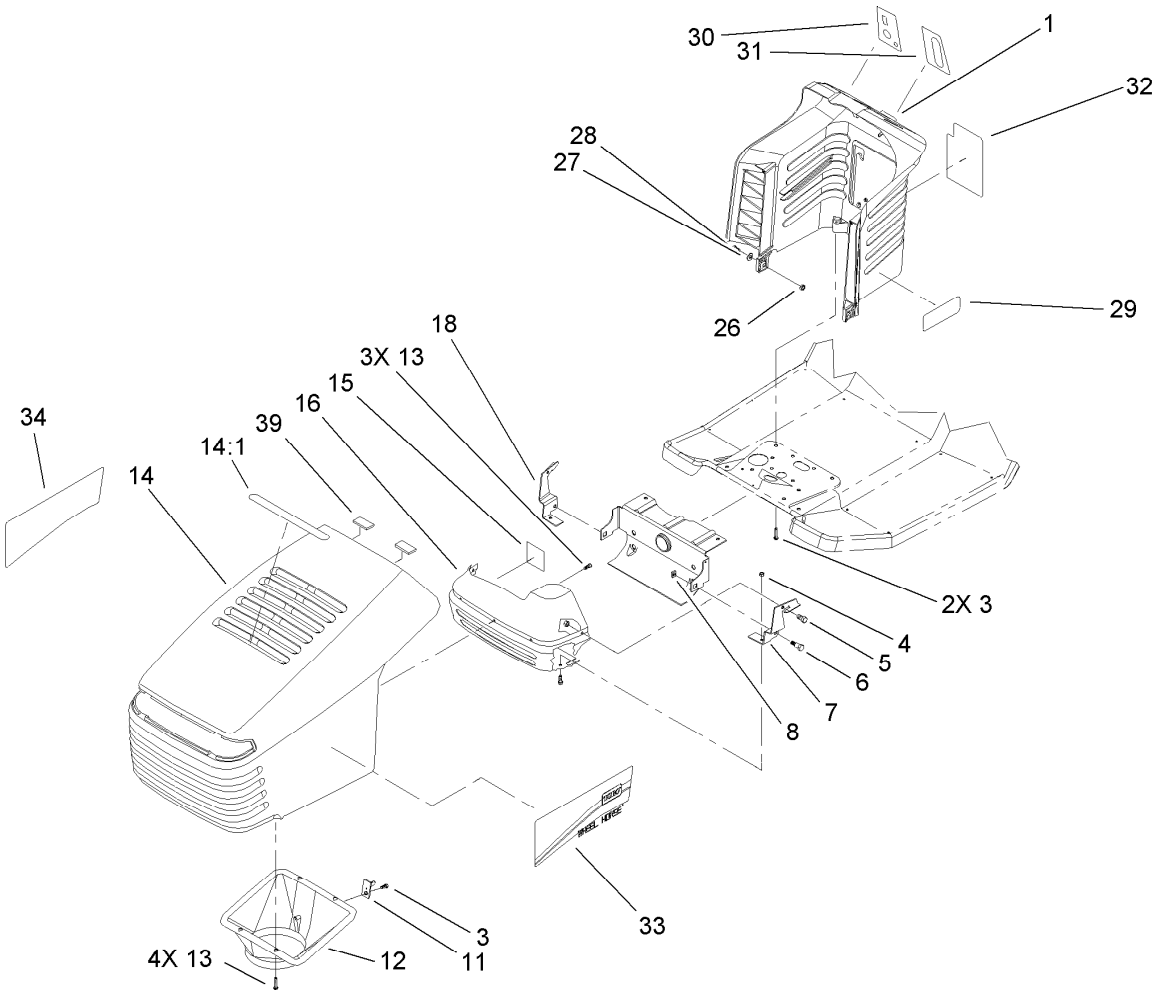

Hood and Tower Assembly

Ref.	Part Number	Qty.	Description
1	107-4920	1	Tower-Steering
3	46-8091	3	Screw-HWH
4	3296-42	4	Nut-Lock, NI
5	321-2	4	Screw-HH
6	28-0540	2	Bolt-Shoulder
7	88-6050-03	1	Bracket-Pivot, LH Hood
8	3290-496	2	Nut-Retainer
11	94-1984	1	Latch-Pin
12	93-3891	1	Duct-Air, Hood
13	46-8090	7	Screw-Plastite
14	92-8650	1	Hood ASM
14:1	92-5748	1	Decal-Air Duct
15	92-5782	3	Tape-Foil

Ref.	Part Number	Qty.	Description
16	93-3864-03	1	Shield-Heat
18	88-6040-03	1	Bracket-Pivot, RH Hood
26	3296-29	2	Nut-Lock, NI
27	3256-23	2	Washer-Flat
28	322-3	2	Screw-HH
29	108-7804	2	Decal
30	99-8139	1	Decal
31	92-2461	1	Decal
32	107-4921	1	Decal-Danger
33	105-2497	1	Decal-Hood
34	105-2496	1	Decal-Hood
39	94-1980	2	Foam-Hood

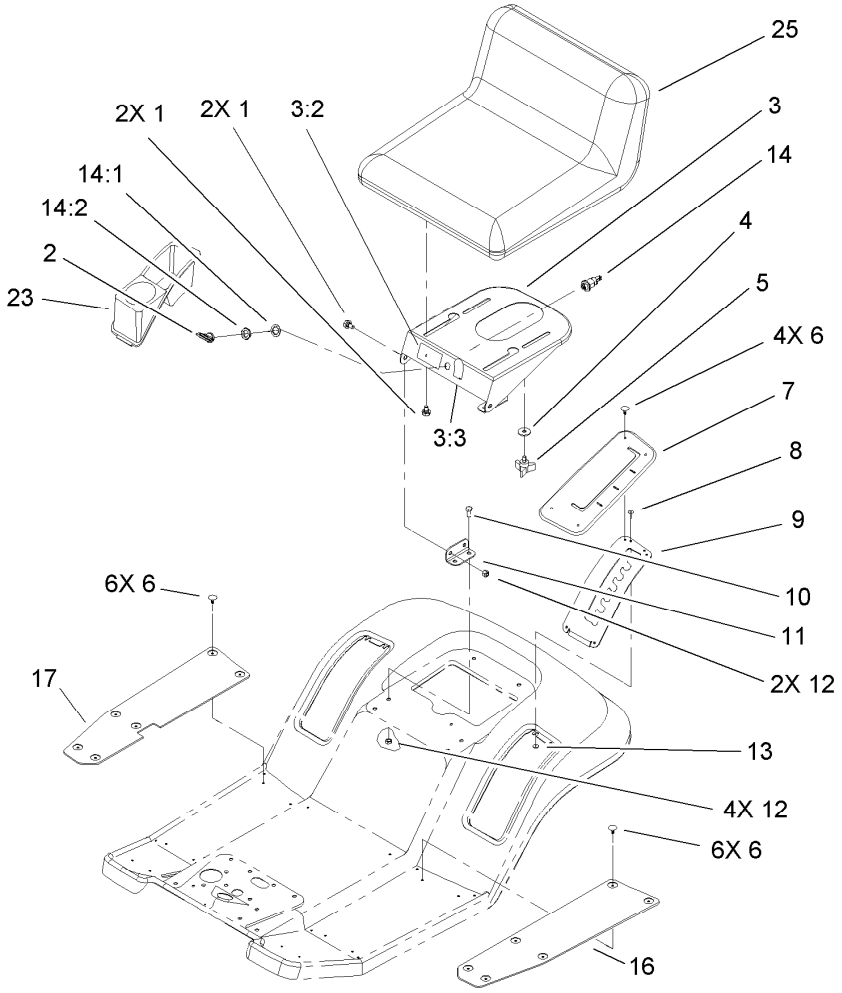

Rear Body and Seat Assembly

Ref.	*Part Number*	*Qty.*	*Description*
1	37-8770	4	Bolt-Shoulder
2	63-8360	1	Key-Ignition (W/Shield)
3	106-6436	1	Seat Support ASM
3:2	99-2985	1	Decal-Danger
3:3	99-5339	1	Decal
4	5-4460	2	Washer-Pivot
5	92-9674	2	Knob
6	3290-479	16	Fastener-Panel
7	88-5170	1	Cover-HOC
8	3290-282	2	Rivet-Blind
9	88-5030-03	1	Gate-HOC
10	322-3	4	Screw-HH
11	88-4820-03	2	Bracket-Pivot, Seat
12	3296-29	6	Nut-Lock, NI
13	3269-26	2	Washer-Plain
14	46-5780	1	Starter Switch ASM
14:1	3254-5	1	Washer-Tooth, Internal
14:2	218-461	1	Nut-HH
16	88-5240	1	Mat-Foot, LH
17	88-5230	1	Mat-Foot, RH
23	88-4990	1	Tray-Fender
25	106-6439	1	Seat-11 Inch

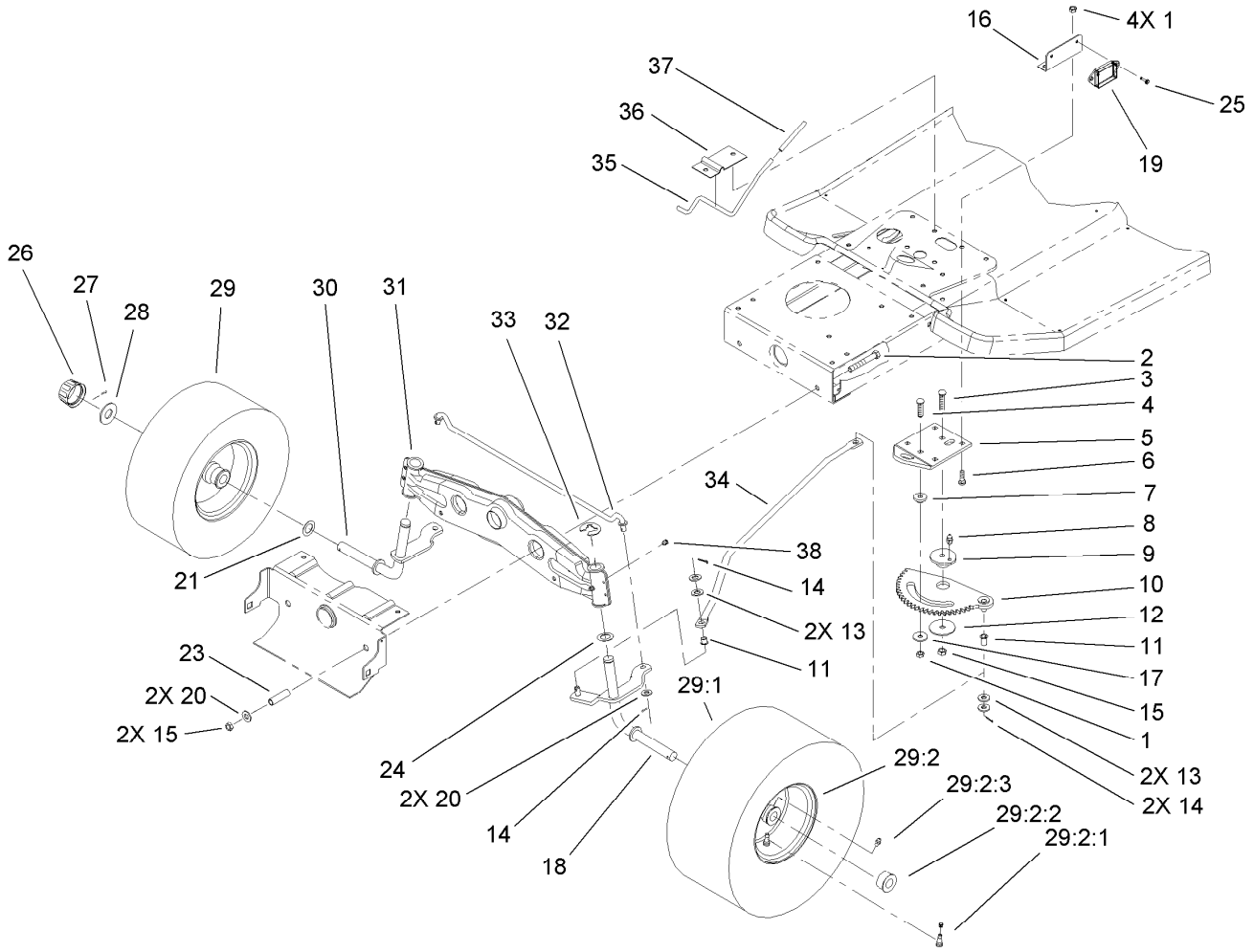

Steering Assembly

Ref.	Part Number	Qty.	Description
1	3296-29	5	Nut-Lock, NI
2	323-13	2	Screw-HH
3	3231-4	1	Screw-CARR
4	3230-3	1	Screw-CARR
5	88-5130-03	1	Bracket-Rack, Steering
6	3230-2	4	Bolt-CARR
7	88-5010	1	Spacer-Rack, Steering
8	302-26	1	Fitting-Grease
9	88-4670	1	Bushing-Eccentric
10	88-5200	1	Rack-Steering
11	52-2891	2	Bushing-Flanged, Nylon
12	111419	1	Washer-Bearing
13	3256-25	4	Washer-Flat
14	3272-10	4	Pin-Cotter
15	3296-39	3	Nut-Lock, NI
16	99-2956-03	1	Bracket-Module
17	5-4460	1	Washer-Pivot
18	92-7890-03	1	LH Spindle ASM
19	99-3701	1	Module-Clutch
20	3256-24	4	Washer-Flat
21	3-6498	4	Washer-Thrust
23	88-5470	2	Spacer

Ref.	Part Number	Qty.	Description
24	3-6498	2	Washer-Thrust
25	9266714	2	Screw-HWH
26	61-9780	2	Cap-Hub
27	3272-12	2	Pin-Cotter
28	28-2480	2	Washer-Plain
29		2	Front Wheel And Tire ASM ■
29:1	99-2988	1	Tire
29:2	88-4370	1	Rim ASM
29:2:1	232-27	1	Stem-Valve
29:2:2	110513	2	Bearing-Wheel
29:2:3	302-5	1	Fitting-Grease
29:99	232-39	1	Tube-Inner ●
30	92-7889-03	1	RH Spindle ASM
31	99-6844-03	1	Axle-Front
32	88-5380	1	Tie Rod-Steering
33	32151-48	2	E-Ring
34	88-4830	1	Link-Drag
35	88-5510	1	Rod-Brake, Parking
36	88-5520-03	1	Bracket-Parking Brake
37	88-0890	1	Grip-Brake, Parking
38	302-5	2	Fitting-Grease

● Not illustrated

■ Not serviced separately

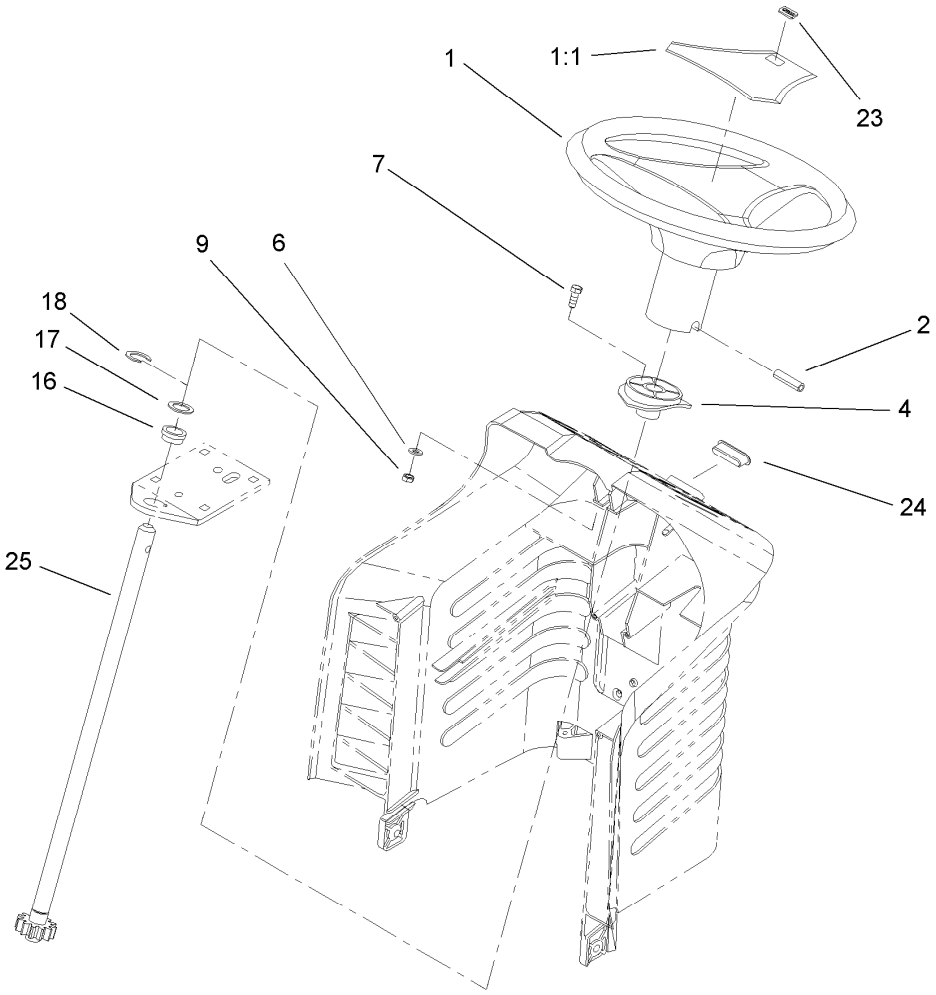

Fixed Steering Assembly

Ref.	*Part Number*	*Qty.*	*Description*
1	98-1467	1	Steering Wheel ASM
1:1	98-1468	1	Cover-Wheel, Steering
2	32121-111	1	Pin-Roll
4	88-4190	1	Bushing-Sliding
6	3256-22	2	Washer-Flat
7	321-4	2	Screw-HH
9	3296-42	2	Nut-Lock, NI
16	88-5150	1	Bearing-Flange
17	3-6498	1	Washer-Thrust
18	32151-48	1	E-Ring
23	98-1459	1	Decal
24	88-4150	1	Plug
25	88-6380	1	Shaft-Steering, Long

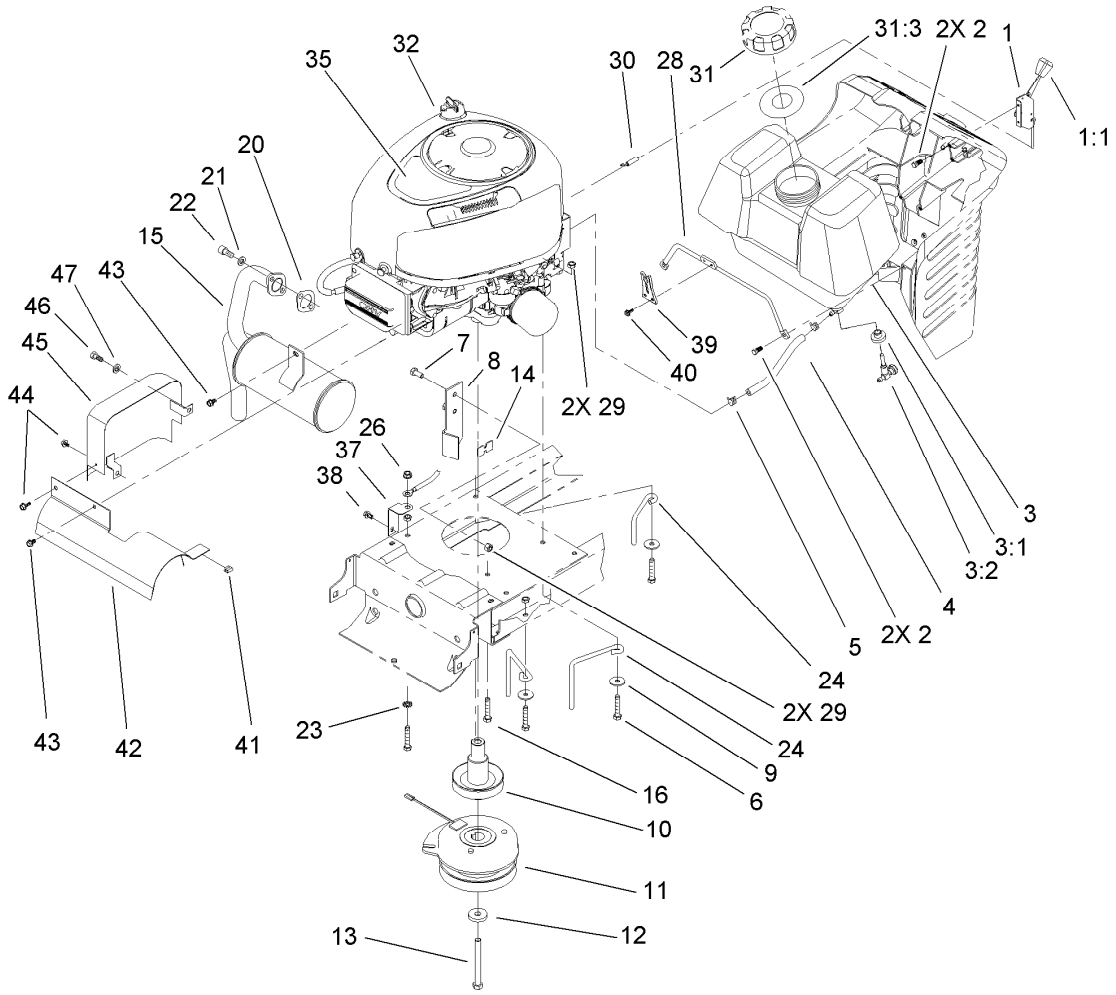

Engine Assembly

Ref.	Part Number	Qty.	Description
1	88-4340	1	Throttle Control ASM
1:1	66-0120	1	Knob
2	27-0220	4	Screw-Special
3	88-3880	1	Gas Tank ASM
3:1	46-6560	1	Bushing
3:2	104048	1	Valve-Fuel
4	47-2963	1	Hose-Fuel
5	2412-98	2	Clamp-Hose
6	322-9	3	Screw-HH
7	322-3	2	Screw-HH
8	107-4914-03	1	Stop-Clutch
9	5-4460	2	Washer-Pivot
10	107-4915	1	Pulley-Engine
11	108-9510	1	Clutch-PTO, Electric
12	112843	1	Washer
13	3212-18	1	Screw-HH
14	98-5023	1	Bumper
15	94-1953	1	Muffler-Exhaust
16	9267154	1	Screw-HWH, Taptite
20	88-4410	1	Gasket-Exhaust
21	3253-4	2	Washer-Lock
22	3274-10	2	Screw-HSH

Ref.	Part Number	Qty.	Description
23	3255-8	1	Washer-Lock
24	93-3855	2	Guide-Belt, RH
26	32149-1	2	Nut-Keps
28	94-1952	1	Rod-Tank, Gas
29	3296-29	4	Nut-Lock, NI
30	88-4350	1	Throttle Cable ASM
31	88-3980	1	Gas Cap ASM
31:3	88-4010	1	Gasket-Cap, Gas
32		1	Engine-Briggs & Stratton, 286H77-0165-E1 ●■
35	107-4905	1	Decal
37	93-3809	1	Bracket-Ground
38	9266714	1	Screw-HWH
39	94-1951	1	Latch-Hood
40	32144-112	2	Screw-HWH
41	93-3882	1	Clip-Tinnerman
42	93-3880-03	1	Shield-Muffler
43	9266714	2	Screw-HWH
44	32104-76	2	Screw-Thd Cutting,HWH
45	93-8450-03	1	Heat Shield ASM
46	322-3	1	Screw-HH
47	3253-4	1	Washer-Lock

● Not serviced separately

■ Obtain parts from www.briggsandstratton.com

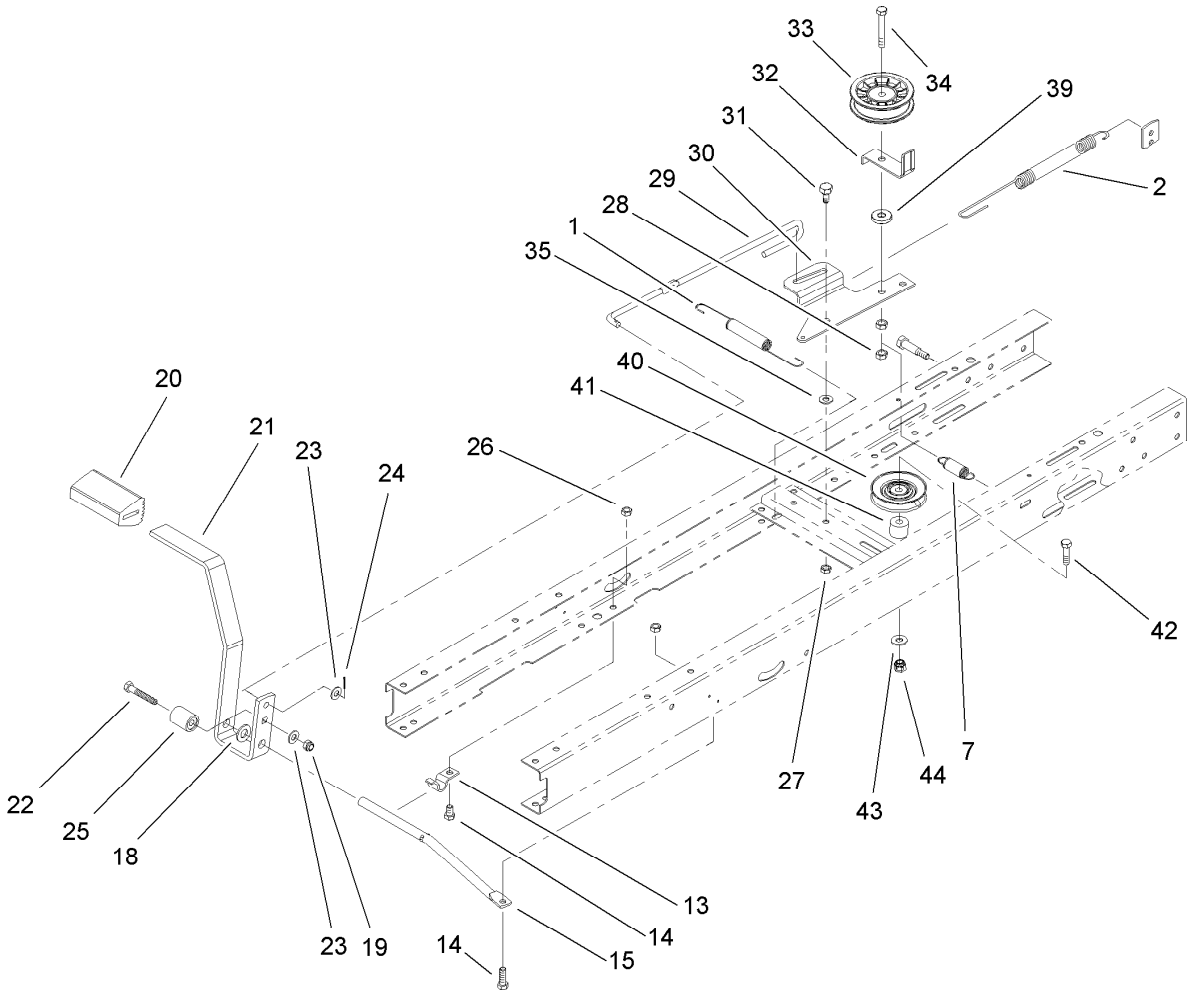

Traction Clutching Assembly

Ref.	Part Number	Qty.	Description
1	27-8890	1	Spring-Extension
2	100-7422	1	Spring-Extension
7	88-6330	1	Spring-Extension
13	88-4810	1	Clamp-Pivot, Shift
14	322-3	2	Screw-HH
15	88-5500	1	Rod-Pivot, Pedal
18	3256-26	1	Washer-Flat
19	3296-47	1	Nut-Lock, NI
20	65-2920	1	Pad-Pedal
21	88-5000-03	1	Pedal-Clutch/Brake, Hydro
22	322-9	1	Screw-HH
23	3256-23	2	Washer-Flat
24	3272-10	1	Pin-Cotter
25	99-6836	1	Spacer
26	3296-29	2	Nut-Lock, NI

Ref.	Part Number	Qty.	Description
27	3296-29	1	Nut-Lock, NI
28	3296-59	2	Nut-Lock, NI
29	88-5270	1	Rod-Clutch/Brake
30	88-6070	1	Arm-Idler
31	37-8770	1	Bolt-Shoulder
32	88-5560	1	Guide-Idler, Belt
33	104-4160	1	Pulley-Idler
34	323-11	1	Screw-HH
35	5-4460	1	Washer-Pivot
39	92-4890	1	Washer
40	92-7102	1	Pulley-Idler
41	92-5791	1	Spacer
42	323-10	1	Screw-HH
43	3256-3	1	Washer-Flat
44	3296-39	1	Nut-Lock, NI

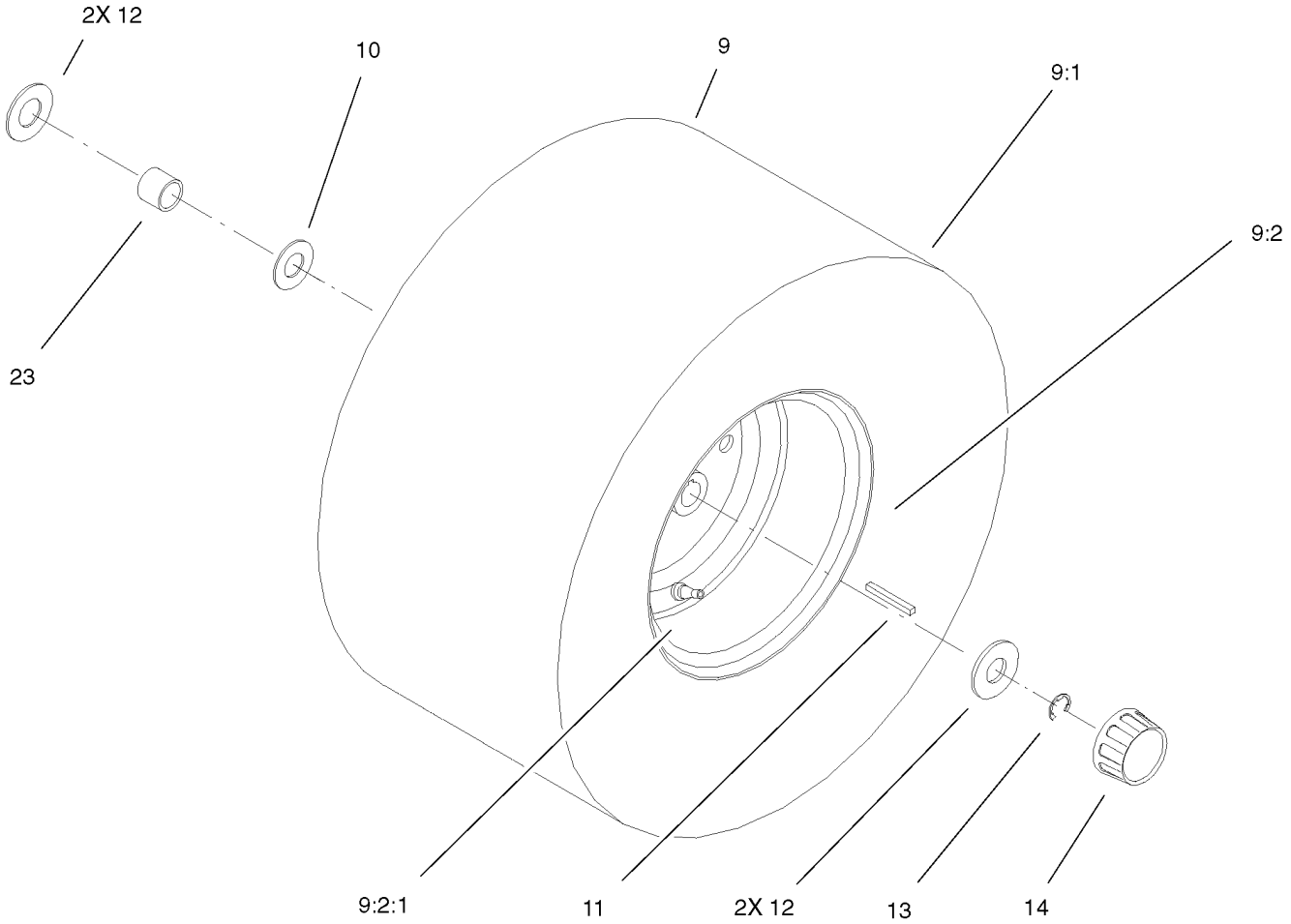

Rear Wheel and Tire Assembly

Ref.	*Part Number*	*Qty.*	*Description*
9		2	Rear Wheel And Tire ■
9:1	99-2996	1	Tire
9:2	88-4390	1	Rim ASM
9:2:1	232-27	1	Stem-Valve
9:99	232-41	1	Tube ●
10	3-6498	2	Washer-Thrust
11	7-0036	2	Key-Square
12	28-2480	4	Washer-Plain
13	32151-48	2	E-Ring
14	61-9780	2	Cap-Hub
23	104-4161	2	Spacer-Wheel

● Not illustrated

■ Not serviced separately

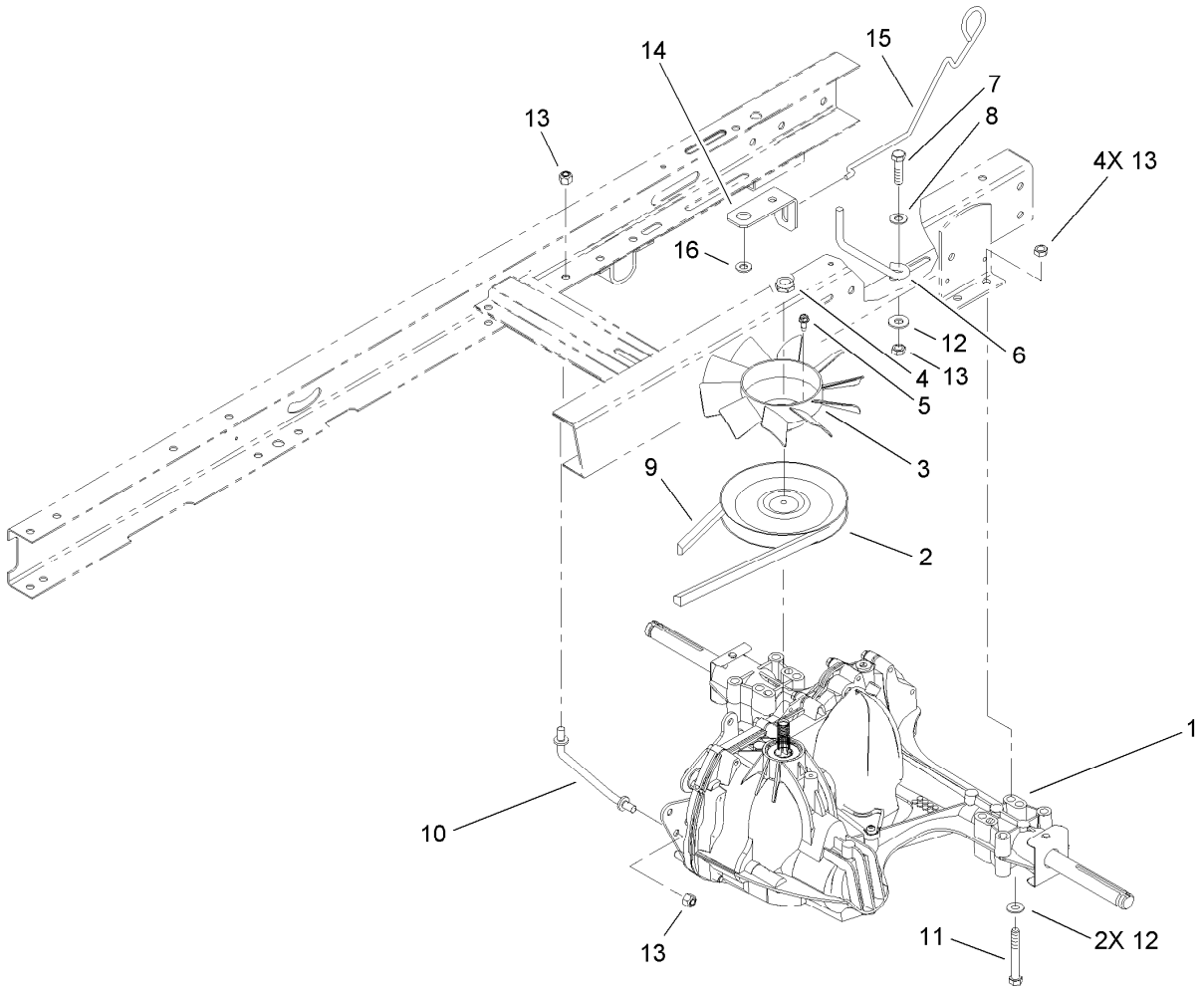

Hydro Transaxle Assembly

Ref.	*Part Number*	*Qty.*	*Description*
1	104-1760	1	Transaxle ASM
2	104-1754	1	Pulley
3	104-2162	1	Fan
4	3296-28	1	Nut-Lock, NI
5	9134304	3	Screw-HWH
6	107-4911	1	Guide-Belt
7	322-5	1	Screw-HH
8	5-4460	1	Washer-Pivot
9	88-6280	1	V-Belt
10	100-6225	1	Strap-Torque
11	322-13	4	Screw-HH
12	3256-23	3	Washer-Flat
13	3296-29	7	Nut-Lock, NI
14	100-7406	1	Bracket-Bypass
15	100-7407	1	Rod-Bypass
16	3256-3	1	Washer-Flat

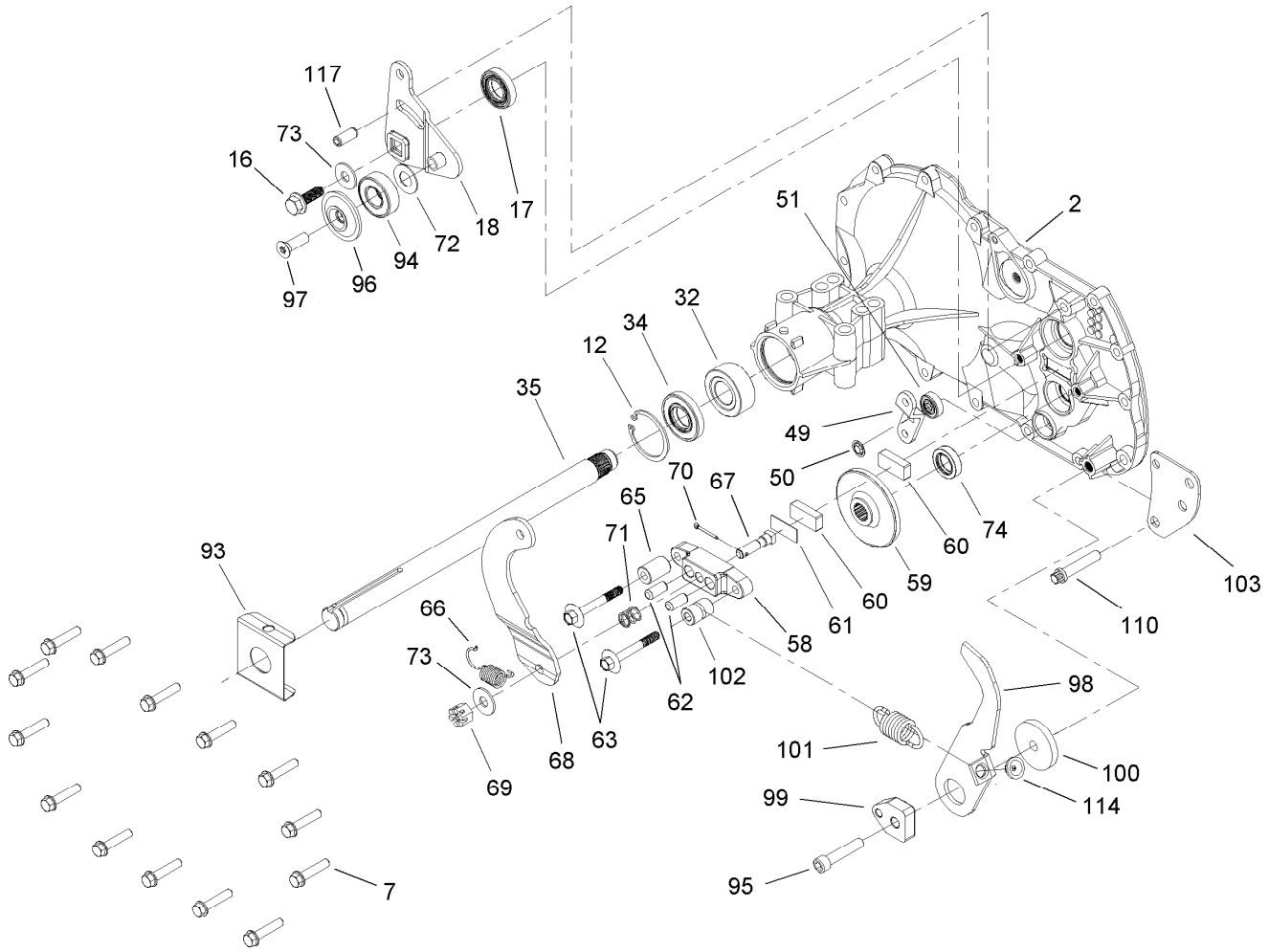

Side Housing and Bearing Assembly
Transaxle No. 104-1760

Ref.	Part Number	Qty.	Description
2	104-5302	1	Side Housing ASM
7	104-5305	14	Screw-HHF
12	104-5309	1	Ring-Retaining
16	104-5312	1	Screw-HF
17	104-5313	1	Seal-Lip
18	104-5314	1	Arm-Control
32	104-5321	1	Bearing-Sleeve, Outboard
34	104-5322	1	Seal-Lip
35	104-5323	1	Shaft-Axle, RH
49	104-5336	1	Arm-Bypass
50	104-5337	1	Ring-Retaining
51	104-5338	1	Seal-Lip
58	104-5343	1	Yoke-Brake
59	104-5344	1	Rotor-Brake
60	104-2171	2	Puck-Brake
61	104-2181	1	Puck-Plate
62	104-2176	2	Pin-Brake
63	104-5345	2	Screw-HF
65	104-2180	1	Spacer
66	104-2184	1	Spring-Arm, Brake (Bias)
67	104-2174	1	Bolt-SQH

Ref.	Part Number	Qty.	Description
68	104-5346	1	Arm-Brake
69	93-3807	1	Nut-Castle
70	3272-7	1	Pin-Cotter
71	104-2188	1	Spring-Brake, Anti Drag
72	94-1933	1	Washer
73	5-4460	2	Washer-Pivot
74	104-5347	1	Seal-Oil
93	104-5353	1	Clip-Spring
94	104-2156	1	Bearing
95	104-2155	1	Screw
96	104-2157	1	Spacer-Locating
97	104-2158	1	Screw-Countersunk
98	104-5354	1	Arm-Return
99	104-2119	1	Puck-Adjusting
100	104-5355	1	Washer
101	104-5356	1	Spring-Extension
102	104-5357	1	Spacer
103	104-5358	1	Bracket-Torque
110	104-2148	1	Screw-TTH
114	104-5363	1	Guide-Spring
117	104-5365	1	Pin-Spring

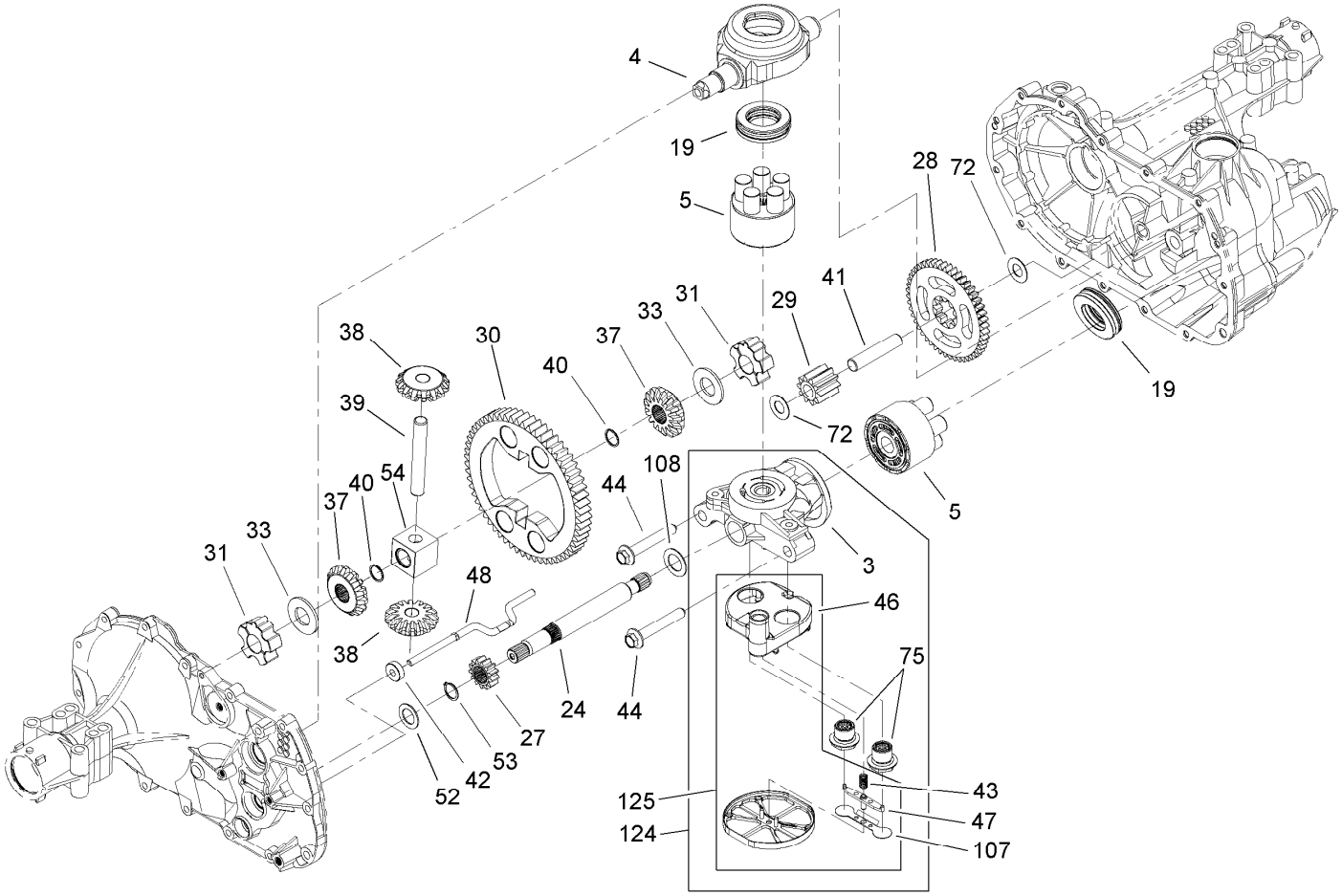

Gear Assembly
Transaxle No. 104-1760

Ref.	Part Number	Qty.	Description
3	104-5303	1	Center Section ASM
4	104-5304	1	Swashplate-Trunnion
5	104-2106	2	Cylinder Block ASM
19	94-6922	2	Bearing-Thrust
24	104-5315	1	Shaft-Motor
27	104-5316	1	Gear-Pinnion, 13T
28	104-5317	1	Gear-10T/48T
29	104-5318	1	Gear-Jackshaft, 10T
30	104-5319	1	Gear-Bull 60T
31	104-5320	2	Bearing-Sleeve
33	94-1943	2	Washer
37	104-5325	2	Gear-Miter
38	104-5326	2	Gear-Miter 15T
39	104-5327	1	Shaft
40	104-5328	2	Ring-Retaining, Spiral
41	104-5329	1	Pin-Jackshaft
42	104-5330	1	Magnet-Ring

Ref.	Part Number	Qty.	Description
43	104-5331	1	Spring-Bypass
44	94-6926	2	Bolt
46	104-5333	1	Base-Filter
47	104-5334	1	Actuator-Bypass
48	104-5335	1	Rod-Actuator, Bypass
52	104-5339	1	Washer-Flat
53	104-5340	1	Ring-Retaining
54	104-5341	1	Bearing-Block, Center
72	94-1933	2	Washer
75	104-5348	2	Check Plug ASM
107	104-5359	1	Deflector
108	104-5360	1	Washer
124	106-6522	1	Center Section Filter Bypass ASM
125	106-6523	1	Filter ASM
127	104-5368	1	Seal Kit ●

● Not illustrated

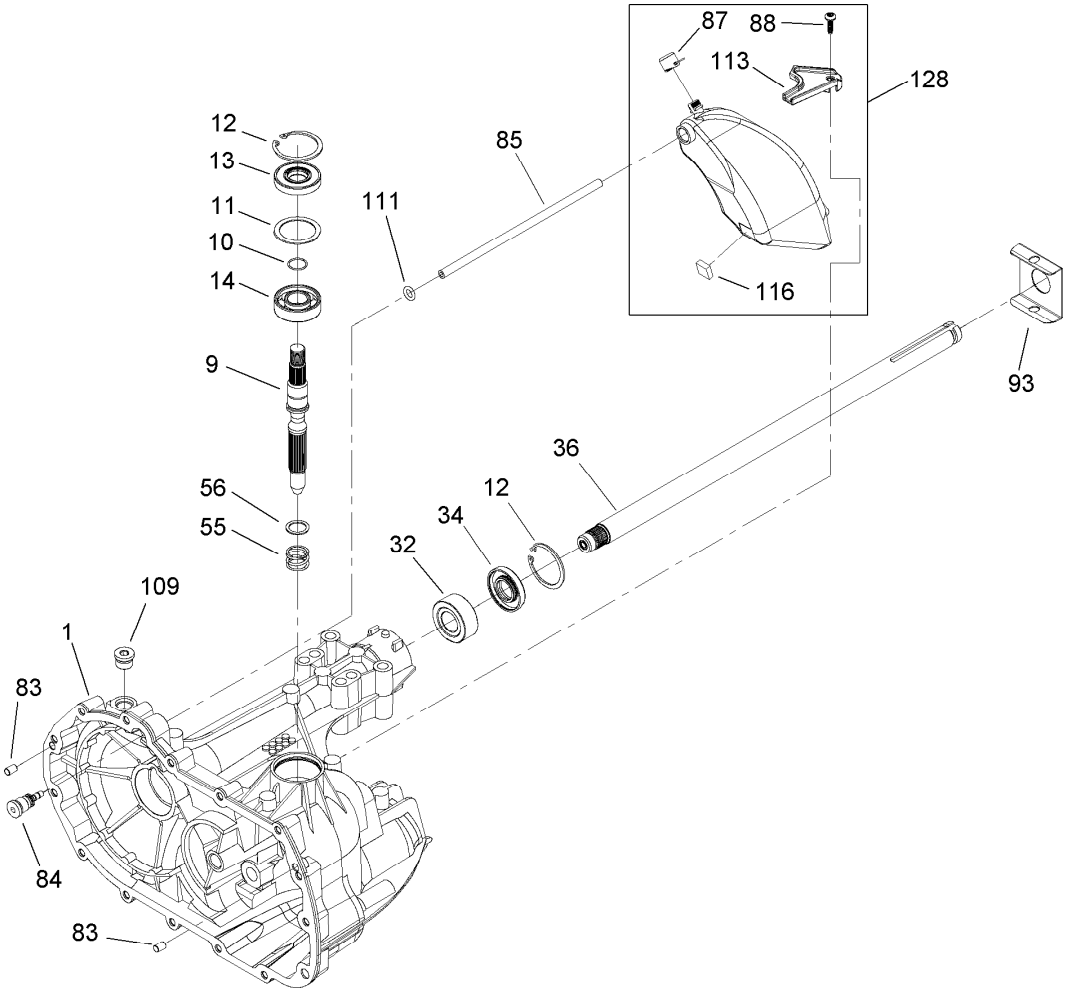

Main Housing and Bearing Assembly
Transaxle No. 104-1760

Ref.	*Part Number*	*Qty.*	*Description*
1	104-5301	1	Main Housing ASM
9	104-5306	1	Shaft-Input
10	104-5307	1	Ring-Retaining
11	104-5308	1	Spacer
12	104-5309	2	Ring-Retaining
13	104-5310	1	Seal-Lip
14	104-5311	1	Bearing-Ball
32	104-5321	1	Bearing-Sleeve, Outboard
34	104-5322	1	Seal-Lip
36	104-5324	1	Shaft-Axle, LH
55	94-1936	1	Spring-Block
56	94-1937	1	Washer-Thrust
83	104-2170	2	Pin
84	104-5349	1	Fitting-Sae
85	104-5350	1	Hose-Expansion, Tank
87	104-5351	1	Cap-Vent
88	104-5352	1	Bolt-Tapping, Self
93	104-5353	1	Clip-Spring
109	104-2189	1	Plug-Thread, Straight
111	104-5361	1	O-Ring
113	104-5362	1	Bracket-Support
116	104-5364	1	Sponge-Silicone
128	104-5369	1	Expansion Tank Kit

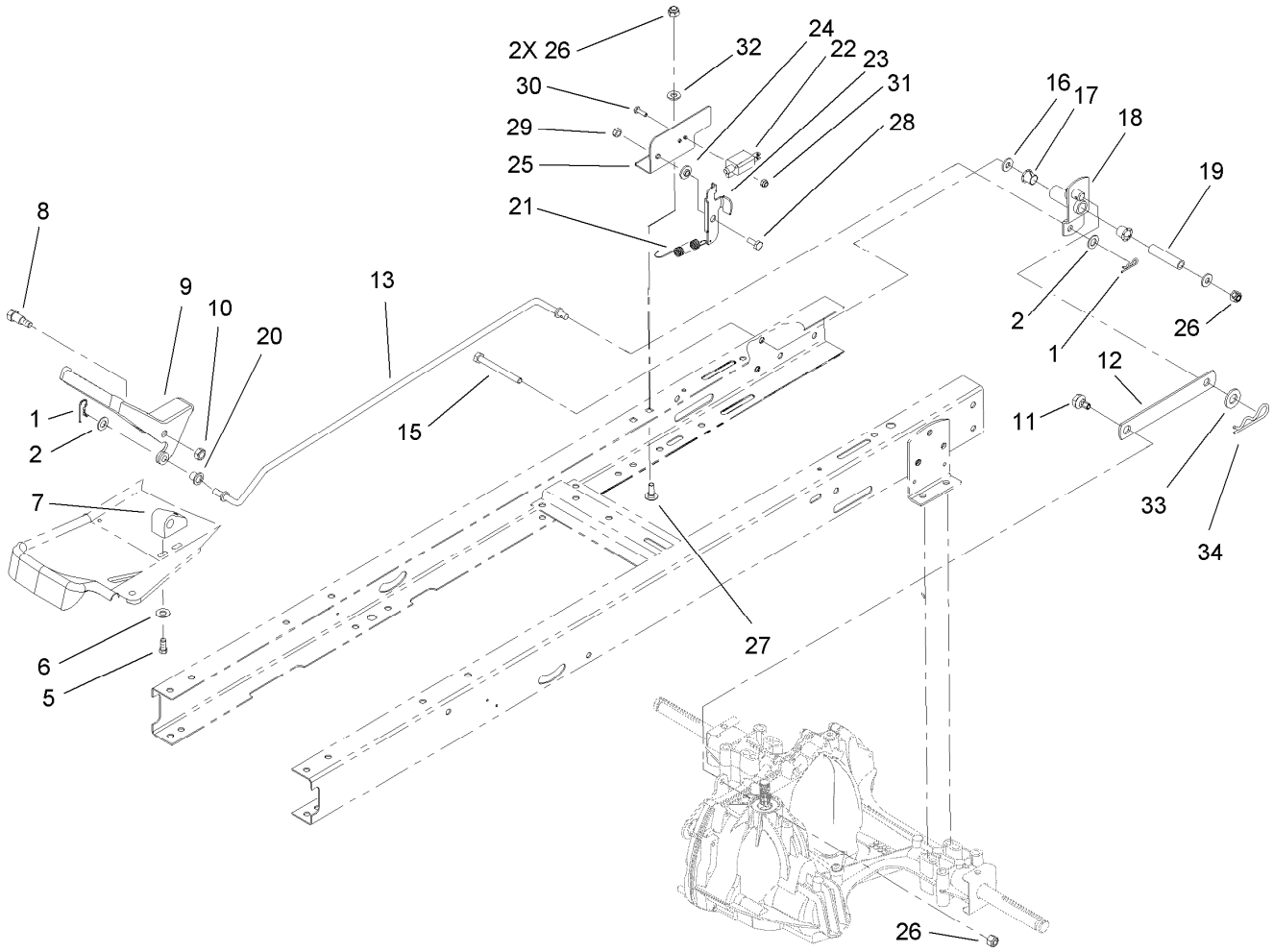

Hydro Transaxle Control Assembly

Ref.	Part Number	Qty.	Description
1	3290-307	2	Pin-Hair
2	3256-38	2	Washer-Flat
5	46-8090	2	Screw-Plastite
6	3256-22	2	Washer-Flat
7	88-4690	1	Block-Pivot
8	23-0310	1	Screw-Shoulder, HH
9	99-6120-05	1	Pedal-Control, Speed
10	3296-59	1	Nut-Lock, NI
11	37-8770	1	Bolt-Shoulder
12	99-6833	1	Link-Control, Speed
13	99-6839	1	Rod-Control, Speed
15	322-14	1	Screw-HH
16	3256-2	2	Washer-Flat
17	256-257	2	Bushing-Nyliner
18	99-6835-03	1	Pivot ASM
19	99-6832	1	Spacer-Pivot

Ref.	Part Number	Qty.	Description
20	99-6121	1	Bushing-Flanged
21	99-6805	1	Spring-Extension
22	95-1653	1	Switch-Pole, Single
23	99-6807	1	Bracket-Pivot
24	99-6808	1	Washer-Stepped
25	99-6806	1	Bracket-Adjustment
26	3296-29	4	Nut-Lock, NI
27	3230-18	2	Screw-CARR
28	99-6810	1	Screw-HH
29	3296-42	1	Nut-Lock, NI
30	3290-392	2	Screw-SHH
31	3296-1	2	Nut-Lock
32	3256-23	2	Washer-Flat
33	3256-26	1	Washer-Flat
34	9335054	1	Pin-Hair

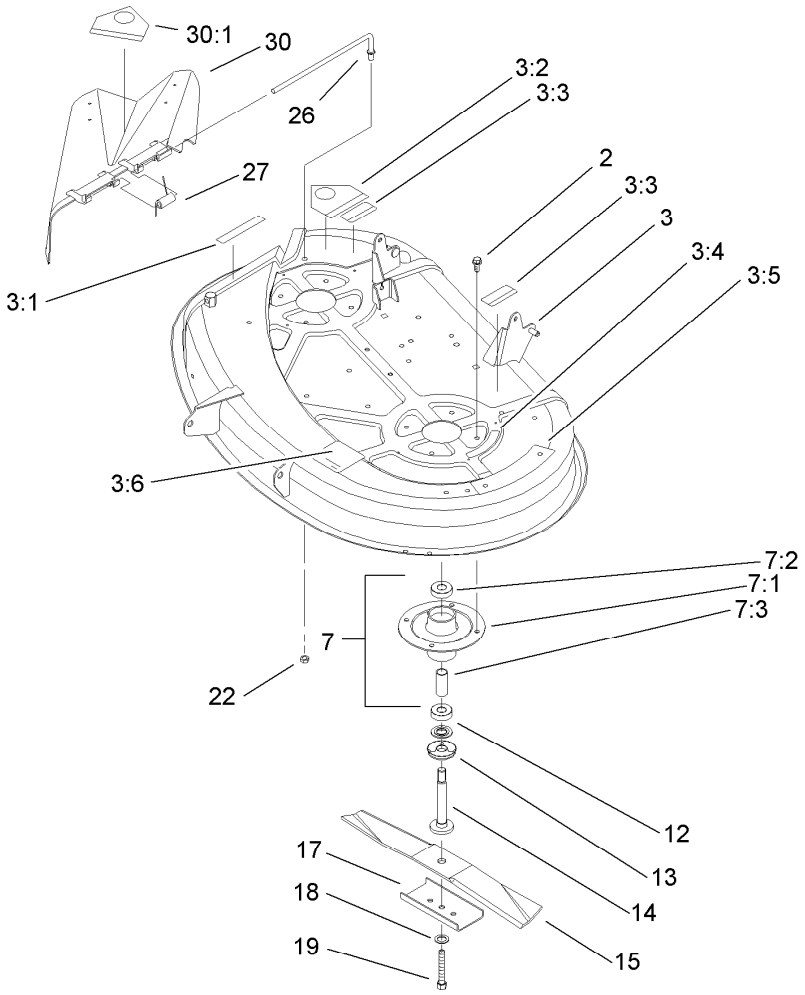

38in Deck Assembly

Ref.	Part Number	Qty.	Description
2	32144-41	8	Screw-Taptite
3	99-5846	1	Deck ASM
3:1	68-3650	1	Decal-Danger, Deflector
3:2	93-1122	1	Decal-Danger
3:3	55-4300	2	Decal-Warning
3:4	68-3660	1	Decal-Danger, Shield
3:5	79-3140	1	Decal-Danger
3:6	93-6679	1	Decal-Routing, Belt
7		2	Spindle ASM
7:1	88-4510	1	Housing-Spindle
7:2	100-1048	2	Bearing-Ball
7:3	62-3661	1	Spacer
12	80-4380	2	Spacer
13	80-4360	2	Shield-Bearing
14	80-4341	2	Shaft-Spindle
15	14-7799	1	Blade Kit
17	80-0510-03	2	Stiffener-Blade
18	3290-465	2	Washer-Belleville
19	26-0671	2	Screw-HH
22	3296-39	1	Nut-Lock, NI
26	95-1661	1	Rod-Pivot
27	57-6950	1	Spring
30	93-0317	1	Deflector ASM
30:1	93-1122	1	Decal-Danger

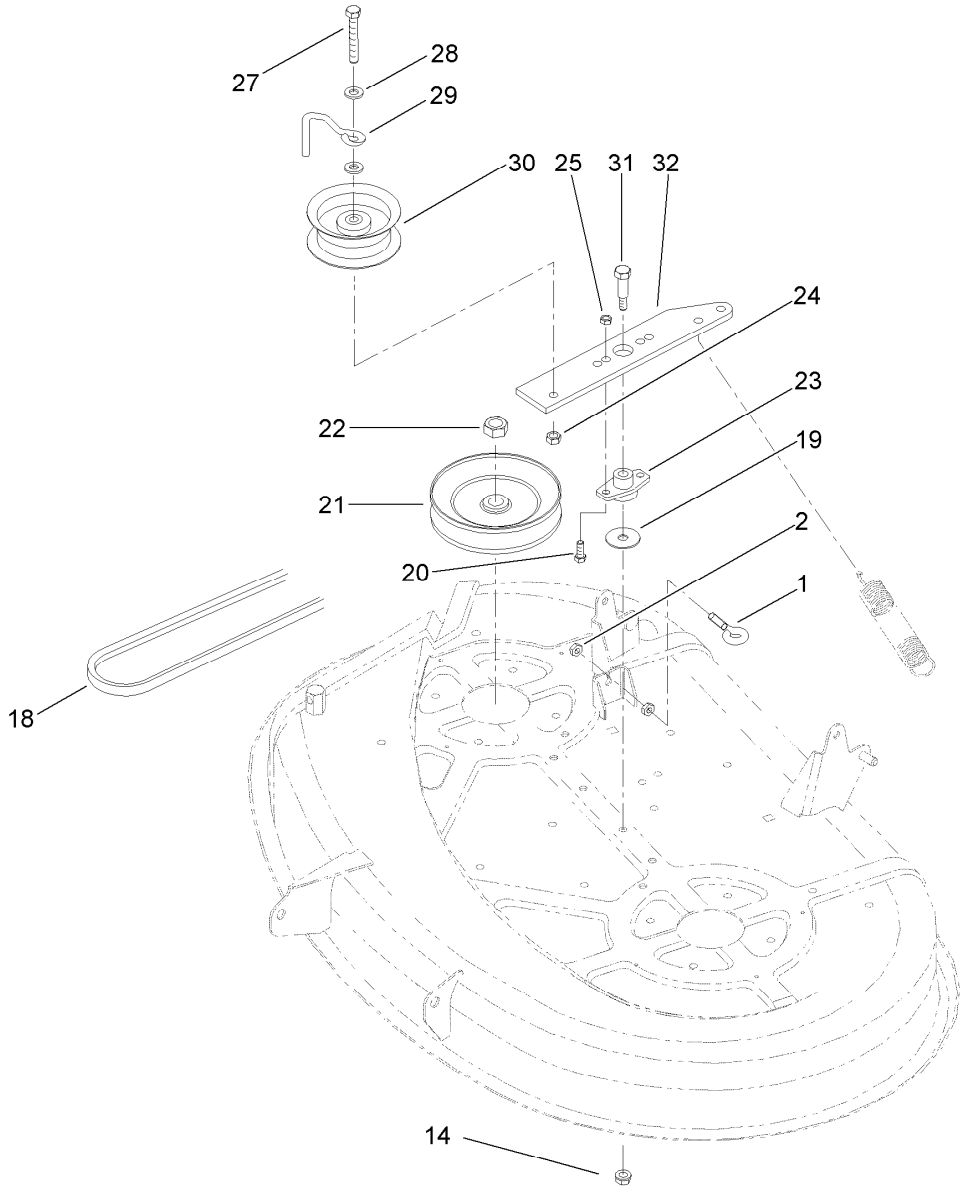

38in Deck Blade Drive Assembly

Ref.	Part Number	Qty.	Description
1	85-9910	1	Eyebolt
2	3218-2	2	Nut-Jam
14	3296-58	1	Nut-Lock, NI
18	88-6250	1	Belt-V
19	3256-68	1	Washer-Flat
20	322-5	2	Screw-HH
21	88-5330	2	Pulley ASM
22	3219-6	2	Nut-Hex
23	88-4980	1	Bushing-Arm, Idler

Ref.	Part Number	Qty.	Description
24	3296-39	1	Nut-Lock, NI
25	3296-29	2	Nut-Lock, NI
27	323-12	1	Screw-HH
28	3256-24	2	Washer-Flat
29	107-7307	1	Guide-Idler, Belt
30	88-5630	1	Pulley-Idler, Flat
31	7-0030	1	Screw-Shoulder, HH
32	88-4870-03	1	Arm-Idler

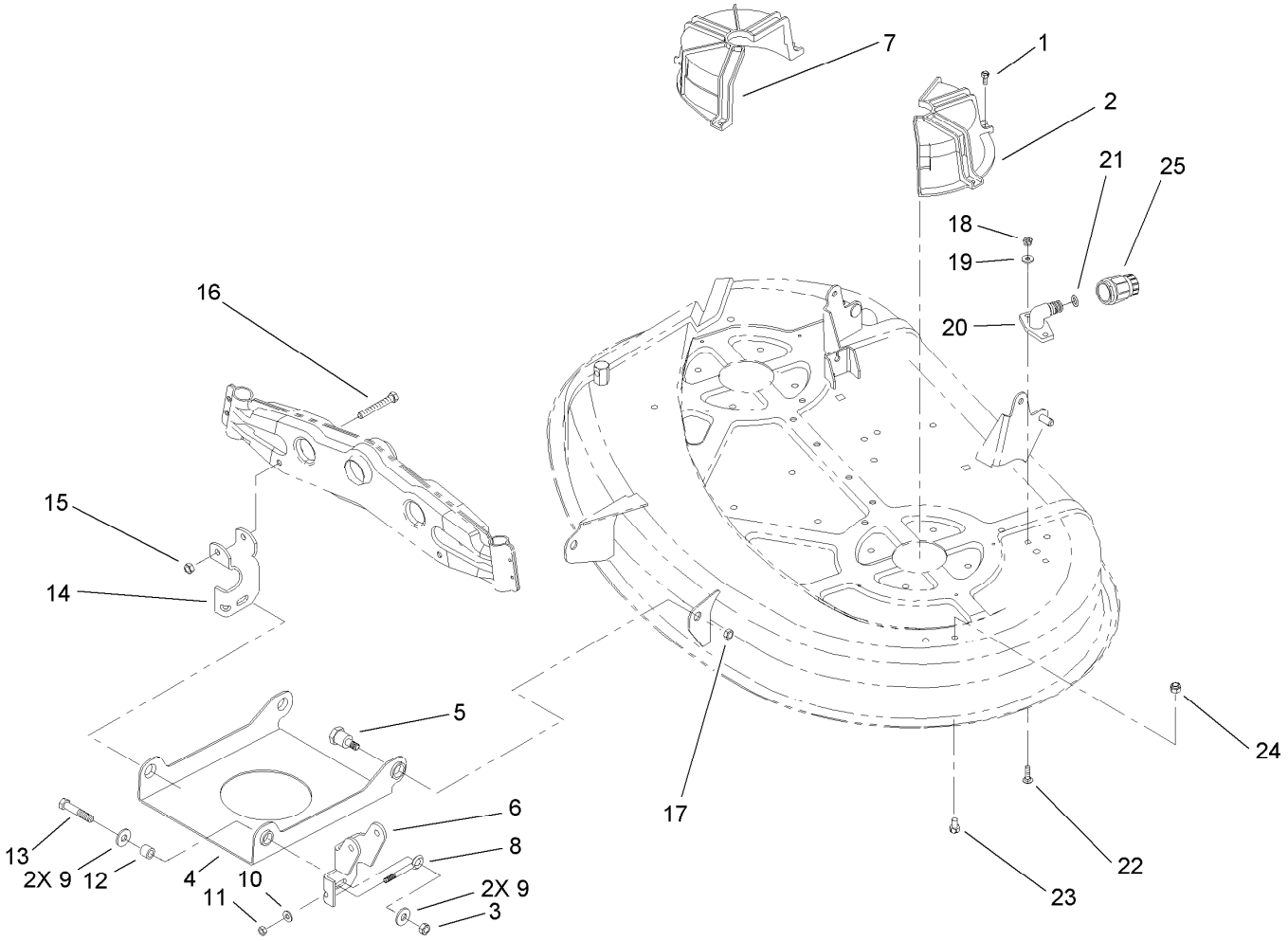

38in Deck Engagement Assembly

Ref.	Part Number	Qty.	Description
1	32104-76	5	Screw-Thd Cutting,HWH
2	88-4030	1	Guide-Belt, LH
3	3296-39	2	Nut-Lock, NI
4	93-3881-03	1	Pan-Deck Suspension, Front
5	94-5823	2	Bolt-Shoulder, HH
6	94-1971-03	1	Bracket-Suspension, LH
7	88-4020	1	Guide-Belt, RH
8	61-9980	2	Screw-Adjusting
9	80-6990	4	Washer-Hardened
10	3256-22	2	Washer-Flat
11	3296-42	2	Nut-Lock, NI
12	93-9847	2	Spacer

Ref.	Part Number	Qty.	Description
13	323-9	2	Screw-HH
14	94-1970-03	1	Bracket-Suspension, RH
15	3296-29	2	Nut-Lock, NI
16	322-12	2	Screw-HH
17	3296-23	2	Nut-Lock, NI
18	3296-16	2	Nut-Lock, NI
19	3256-1	2	Washer-Flat
20	95-2747	1	Fitting-Washout
21	46-6290	1	O-Ring, Seal
22	3229-1	2	Bolt-CARR
23	322-1	2	Screw-HH
24	3296-29	2	Nut-Lock, NI
25	95-3270	1	Connector-Hose

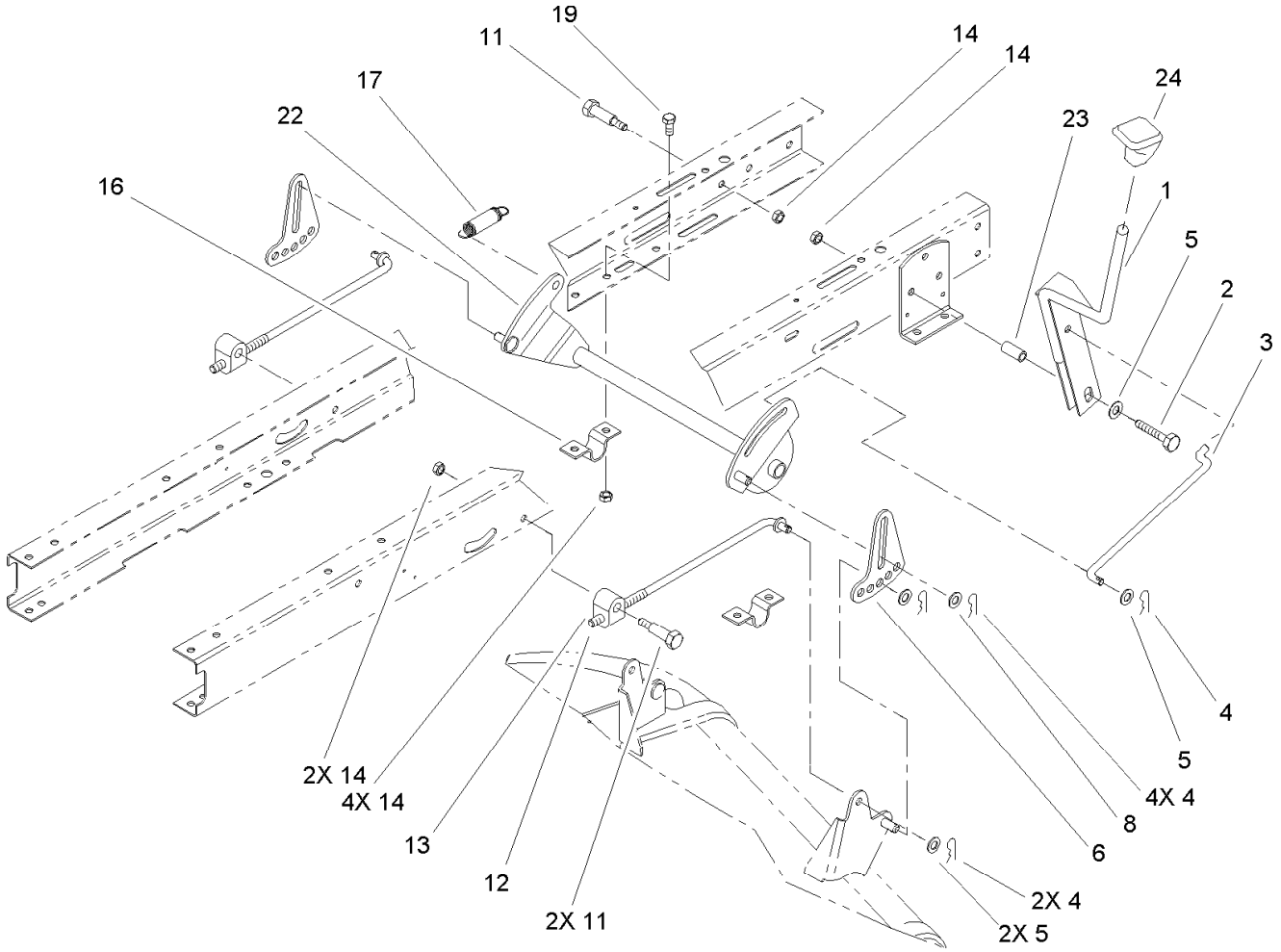

Height-of-Cut Component Assembly

Ref.	*Part Number*	*Qty.*	*Description*
1	93-3822-03	1	HOC Lever ASM
2	322-32	1	Screw-HH
3	88-5900	1	Link-HOC
4	3290-307	7	Pin-Hair
5	3256-24	4	Washer-Flat
6	88-5570-03	2	Link-Adjusting, HOC
8	80-6990	4	Washer-Hardened
11	7-0030	3	Screw-Shoulder, HH
12	88-5450	2	Rod-Hanger, Rear
13	88-4230	2	Trunnion-HOC
14	3296-29	8	Nut-Lock, NI
16	88-4730	2	Clamp-Pivot, HOC
17	88-6460	1	Spring-Extension
19	322-3	4	Screw-HH
22	88-5110-03	1	Pivot ASM
23	65-7210	1	Spacer
24	94-5565	1	Knob-Shift

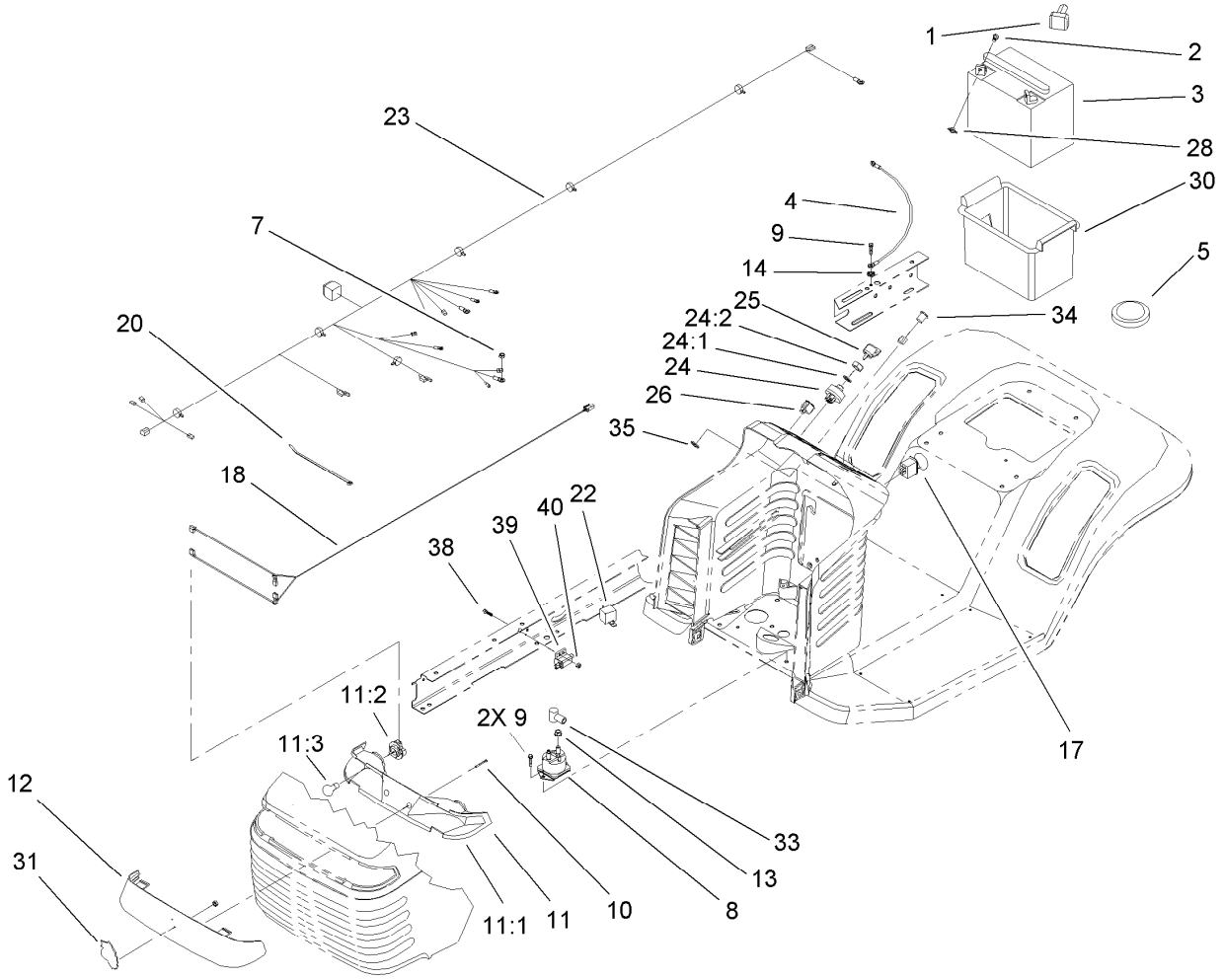

Electrical Assembly

Ref.	Part Number	Qty.	Description
1	28-8080	1	Boot-Terminal
2	321-4	2	Screw-HH
3	104-1755	1	Battery-155 Cca
4	44-8110	1	Wire ASM
5	100-3524	1	Switch-Seat
7	32149-2	1	Nut-Keps
8	106-8245	1	Solenoid-Starter
9	9266714	3	Screw-HWH
10	32144-32	2	Screw
11	88-3970	1	Headlight Reflector ASM
11:1	93-8741	1	Reflector-Light
11:2	116262	2	Socket-Headlight
11:3	7228	2	Bulb
12	88-3960	1	Lens-Headlight
13	32149-2	2	Nut-Keps
14	3255-7	2	Washer-Lock/EXT
17	93-9998	1	Switch-PTO
18	99-1935	1	Harness-Headlight

Ref.	Part Number	Qty.	Description
20	614249	1	Tie-Cable
22	98-7249	1	Relay
23	107-4912	1	Harness-Wire
24	88-9830	1	Key Switch ASM
24:1	3254-5	1	Washer-Tooth, Internal
24:2	218-461	1	Nut-HH
25	63-8360	1	Key-Ignition (W/Shield)
26	92-8875	1	Switch-Rocker
28	32103-22	2	Nut-Wing
30	88-4040	1	Box-Battery
31	95-4248	1	Emblem
33	93-3190	1	Boot-Insulator, Terminal
34	95-7652	1	Light-Indicator
35	32151-80	1	Nut-Push-On, Circular
38	3274-14	2	Screw-HSH
39	65-7410	1	Switch-Pole, Single
40	3296-2	2	Nut-Lock, NI

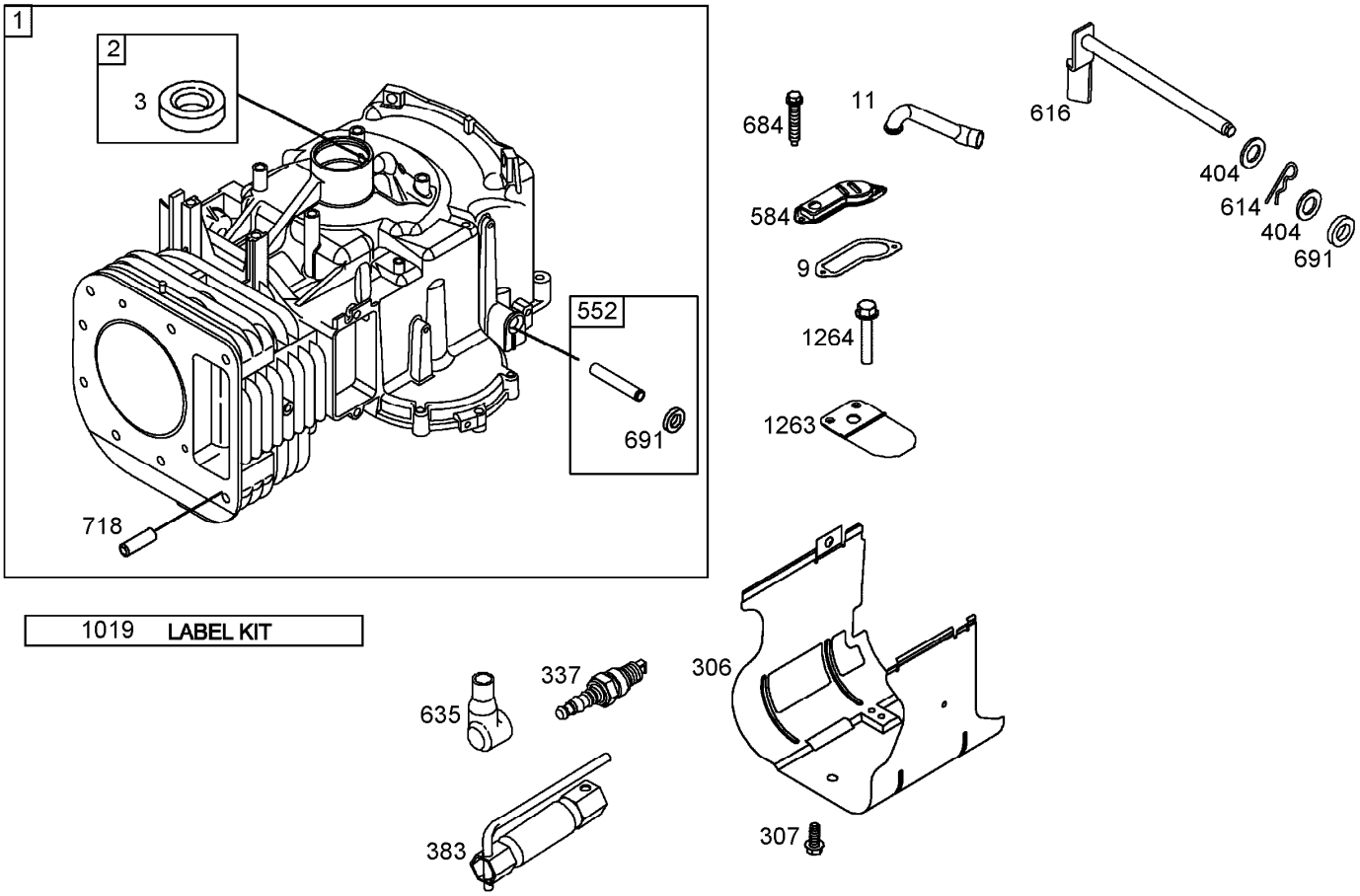

Cylinder Assembly
Briggs and Stratton 286H77-0165-E1

Ref.	Part Number	Qty.	Description
1	697132	1	Cylinder ASM ■
2	399265	1	Bushing And Seal Kit ■
3	391086	1	Seal-Oil ■
9	697109	1	Gasket-Breather ■
11	697113	1	Tube-Breather ■
48	697762	1	Short Block ASM ■ ●
306	697107	1	Shield-Cylinder ■
307	691003	1	Screw (Cylinder Shield) ■
337	691043	1	Spark Plug ■
383	89838	1	Wrench-Plug, Spark ■
404	691691	1	Washer (Governor Crank) ■
552	697144	1	Bushing-Crank, Governor ■
584	697112	1	Cover-Passage, Breather ■
614	691620	1	Pin-Cotter ■
616	692012	1	Crank-Governor ■
635	691909	1	Boot-Spark Plug ■
684	697157	1	Screw (Breather Passage Cover) ■
691	692407	1	Seal-Shaft, Governor ■
718	690959	1	Pin-Locating ■
1019	697143	1	Label Kit ■
1263	697124	1	Reed-Breather ■
1264	697104	1	Screw (Breather Reed) ■

● Not illustrated

■ Obtain parts from www.briggsandstratton.com

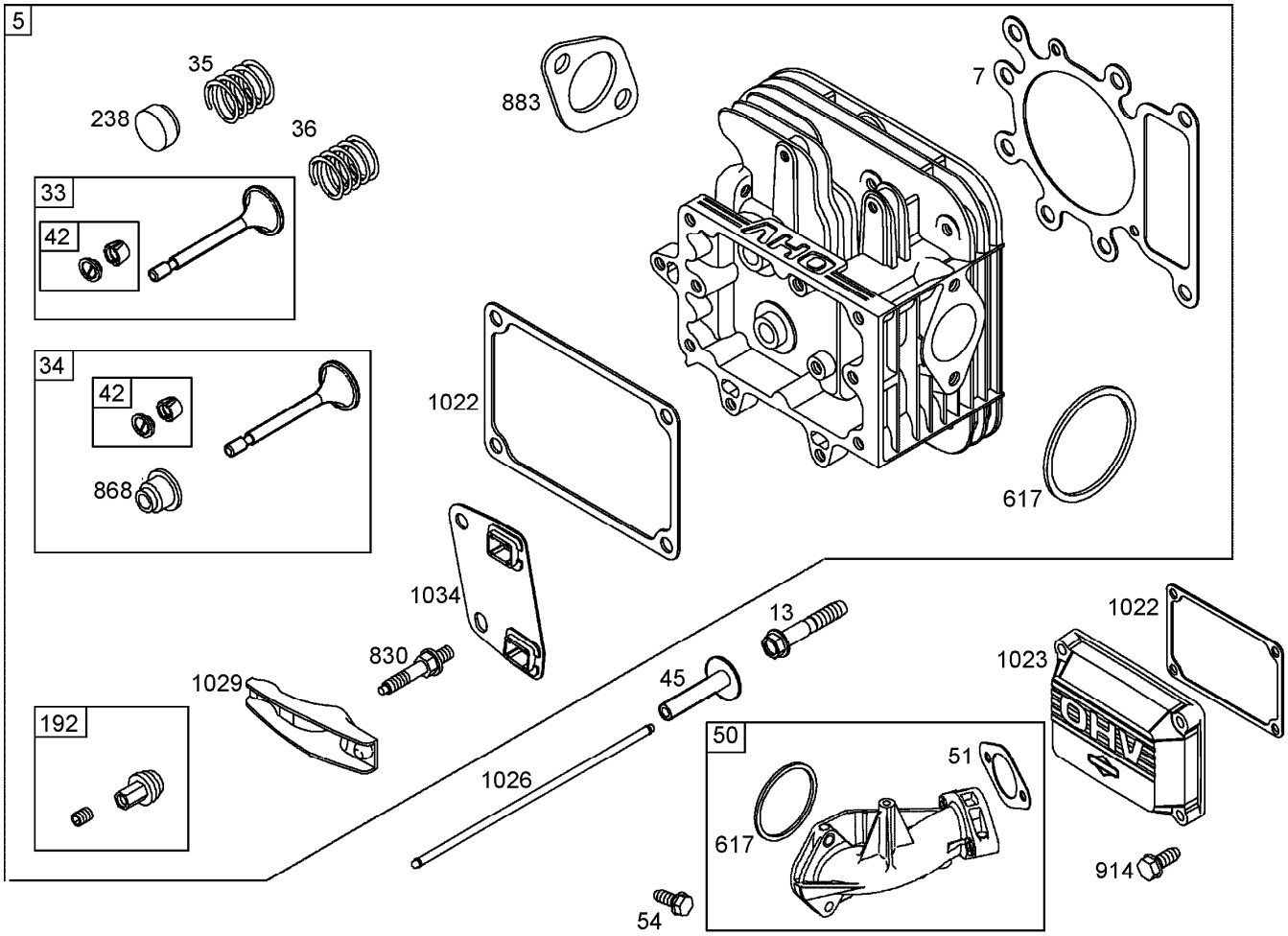

Cylinder Head Assembly
Briggs and Stratton 286H77-0165-E1

Ref.	Part Number	Qty.	Description
5	698148	1	Head cylinder ●
7	273280	1	Gasket-Head, Cylinder ●
13	690360	1	Screw (Cylinder Head Gasket) ●
33	695760	1	Valve-Exhaust ●
34	695761	1	Valve-Intake ●
35	691279	1	Spring-Valve (Intake) ●
36	691279	1	Spring-Valve (Exhaust) ●
42	499586	1	Keeper-Valve ●
45	690564	1	Tappet-Valve ●
50	690193	1	Manifold-Intake ●
51	692137	1	Gasket-Intake ●
54	691148	1	Screw (Intake Manifold) ●
192	691986	1	Adjustor-Arm, Rocker ●

Ref.	Part Number	Qty.	Description
238	691843	1	Cap-Valve ●
617	692138	1	Seal o Ring (Intake Manifold) ●
830	691095	1	Stud-Arm, Rocker ●
868	690968	1	Seal-Valve ●
883	692236	1	Gasket-Exhaust ●
914	691108	1	Screw (Rocker Cover) ●
1022	272475	1	Gasket-Cover, Rocker ●
1023	692492	1	Cover-Rocker ●
1026	692003	1	Rod push ●
	692011	1	Rod push ●
1029	691751	1	Arm-Rocker ●
1034	690822	1	Guide-Rod, Push ●

● Obtain parts from www.briggsandstratton.com

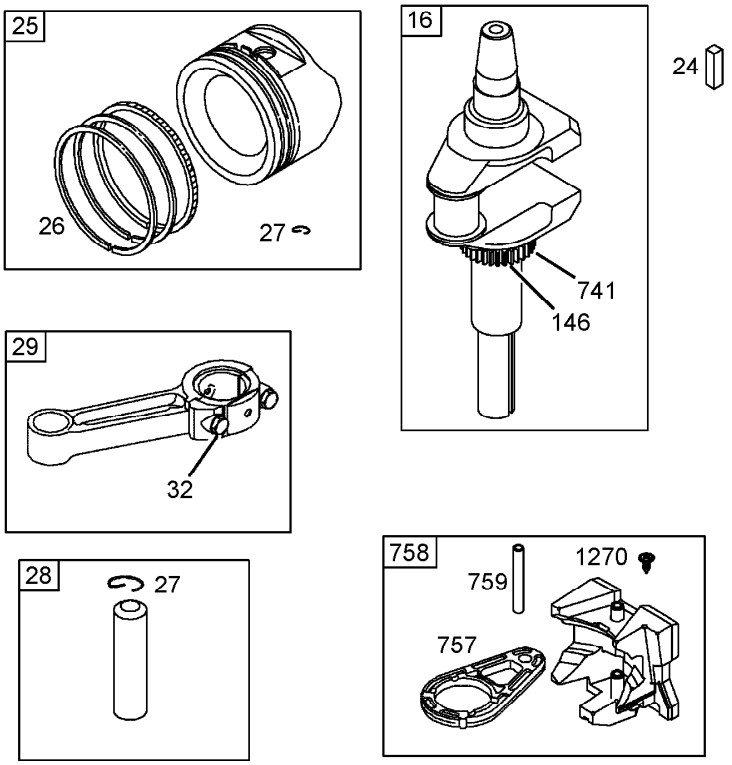

Crankshaft Assembly
Briggs and Stratton 286H77-0165-E1

Ref.	*Part Number*	*Qty.*	*Description*
16	697127	1	Crankshaft ●
24	222698	1	Key ●
25	698371	1	Piston ASM (Standard) (After Code Date 03092800) ●
	697114	1	Piston ASM (Standard) (Before Code Date 03092900) ●
	698375	1	Piston ASM (.020In Oversize) (After Code Date 03092800) ●
	697117	1	Piston ASM (.020In Oversize) (Before Code Date 03092900) ●
26	697115	1	Ring Set (Standard) ●
	697120	1	Ring Set (.020In Oversize) ●
27	698469	1	Lock-Pin, Piston ●
28	697099	1	Pin-Piston (Std) ●
29	697126	1	Rod connecting (Standard) ●
	697263	1	Rod-Connecting (.020In Undersize) ●
32	692852	1	Screw (Connecting Rod) ●
146	691639	1	Key-Timing ●
741	697128	1	Gear-Timing ●
757	697607	1	Link-Counterweight ●
758	697134	1	Counterweight ●
759	697392	1	Pin-Counterweight ●
1270	697156	1	Plug-Counterweight, Avs ●

● Obtain parts from www.briggsandstratton.com

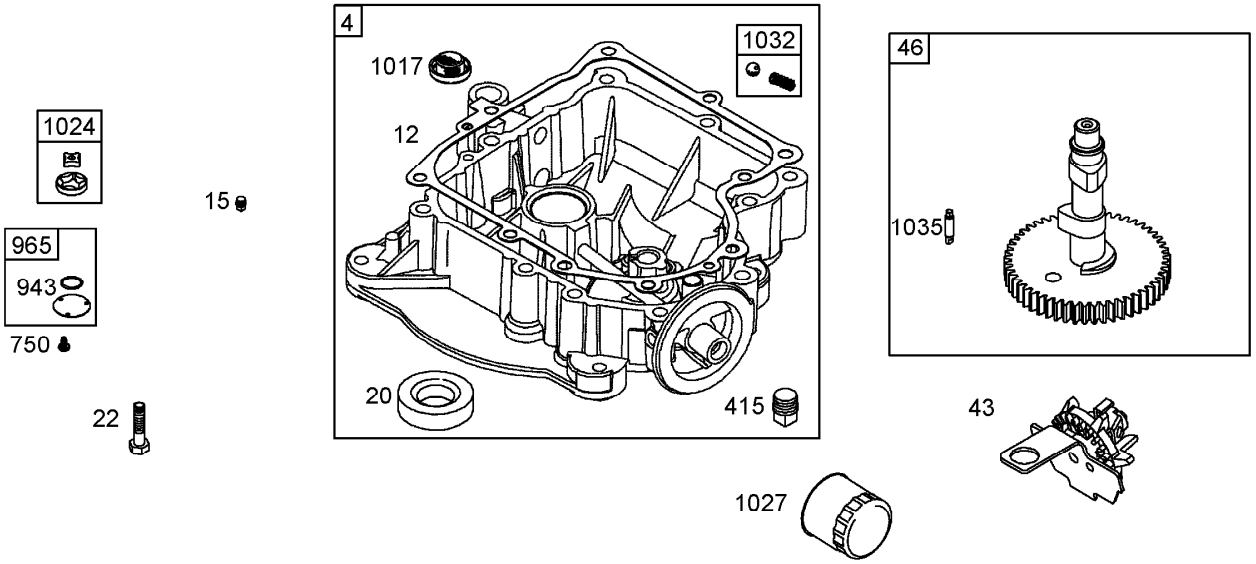

Crankcase Assembly
Briggs and Stratton 286H77-0165-E1

Ref.	*Part Number*	*Qty.*	*Description*
4	697188	1	Sump-Engine ●
12	697110	1	Gasket-Crankcase ●
15	691680	1	Plug-Drain, Oil ●
20	690947	1	Seal-Oil ●
22	692125	1	Screw (Engine Sump) ●
415	690283	1	Plug-Oil ●
43	691968	1	Slinger-Governor, Oil ●
46	790400	1	Camshaft ●
750	691033	1	Screw (Oil Pump Cover) ●
943	690589	1	Seal-O Ring ●
965	499613	1	Cover-Pump, Oil ●
1017	690770	1	Screen-Pump, Oil ●
1024	499054	1	Pump-Oil ●
1027	492932	1	Filter-Oil ●
1032	491710	1	Ball pump, Oil ●
1035	693784	1	Shaft-Pump, Oil ●

● Obtain parts from www.briggsandstratton.com

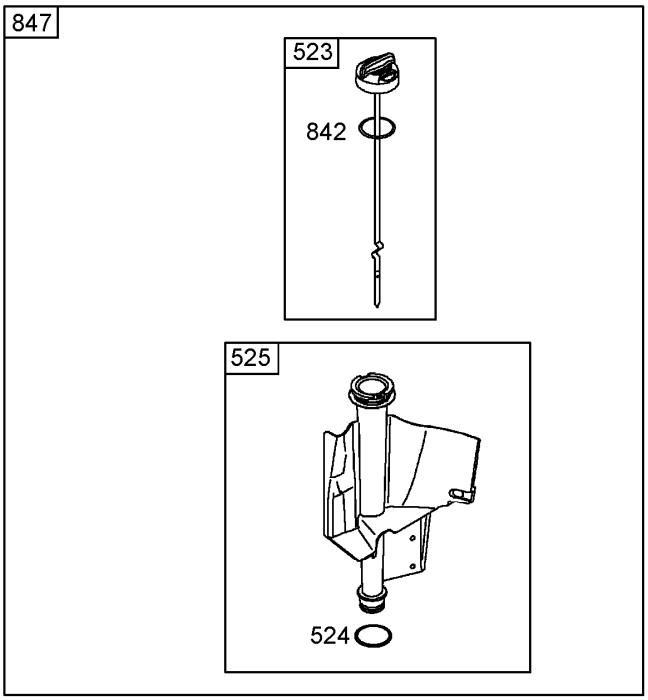

Oil Filter, Tube and Pump Assembly Briggs and Stratton 286H77-0165-E1

Ref.	*Part Number*	*Qty.*	*Description*
523	699908	1	Dipstick ●
524	691032	1	Seal-O Ring ●
525	697184	1	Tube-Dipstick ●
842	691031	1	Seal-O Ring ●
847	790442	1	Dipstick And Tube ASM ●

● Obtain parts from www.briggsandstratton.com

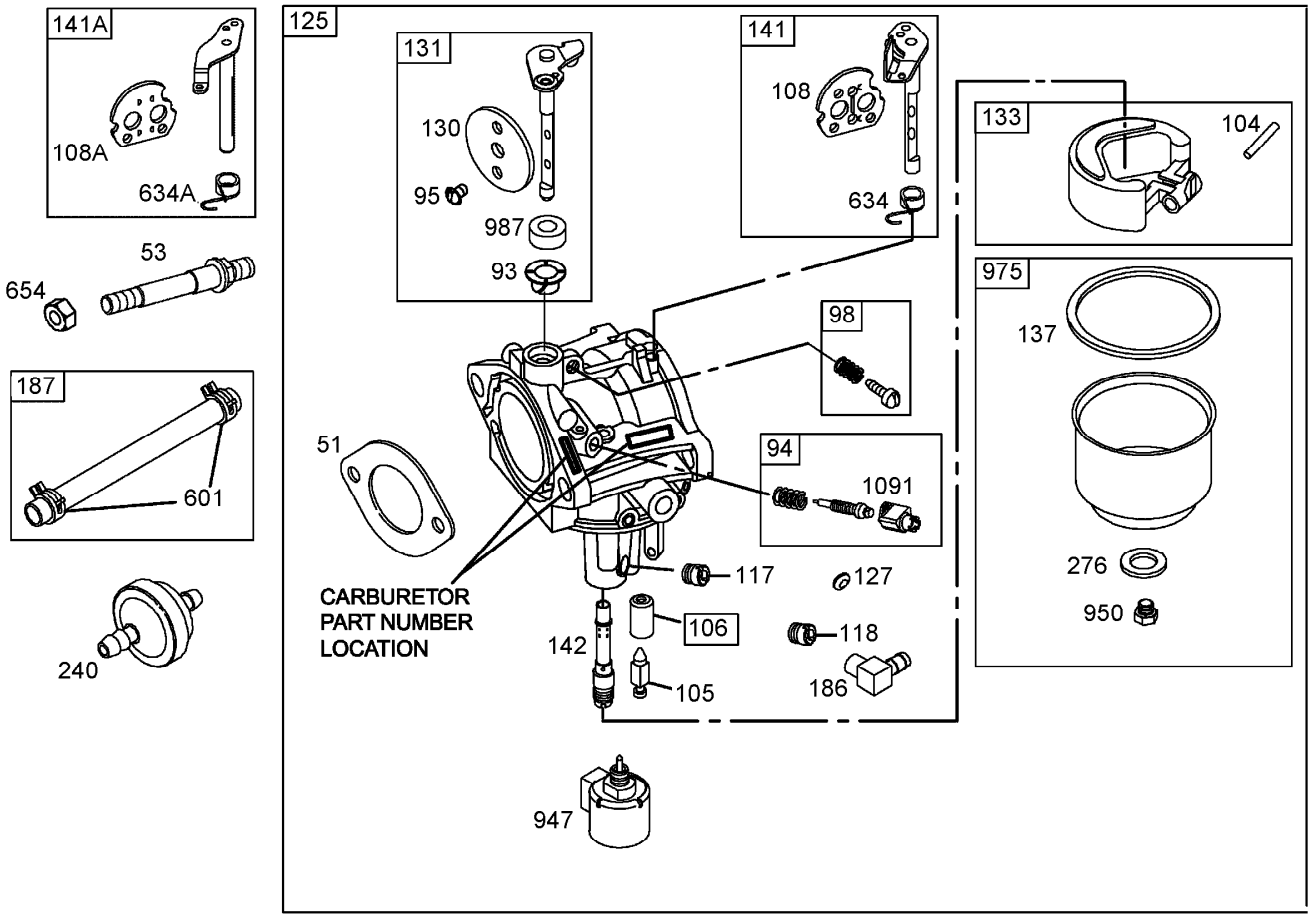

Carburetor Assembly
Briggs and Stratton 286H77-0165-E1

Ref.	Part Number	Qty.	Description
51	692137	1	Gasket-Intake ●
53	690227	1	Stud (Carburetor) ●
93	690602	1	Bushing-Shaft, Throttle ●
94	498030	1	Idle Mixture Kit ●
95	691636	1	Screw (Throttle Valve) ●
98	495800	1	Idle Speed Kit ●
104	690525	1	Pin-Hinge, Carburetor Float ●
105	231855	1	Valve-Needle, Float ●
106	690577	1	Seat-Inlet ●
108	690464	1	Valve choke ●
108A	692344	1	Valve choke (Choke A Matic) ●
117	694352	1	Jet-Main (Std) ●
118	697228	1	Jet-Main (High Altitude) ●
125	698445	1	Carburetor ●
127	695005	1	Plug-Welch ●
130	691750	1	Valve-Throttle ●
131	494379	1	Throttle Shaft Kit ●
133	494381	1	Float-Carburetor ●

Ref.	Part Number	Qty.	Description
137	281165	1	Gasket-Bowl, Float ●
141	495097	1	Choke Shaft Kit (Manual Choke) ●
141A	495931	1	Choke Shaft Kit (Choke A Matic) ●
142	697140	1	Nozzle-Carburetor ●
186	698174	1	Connector-Hose ●
187	699931	1	Line fuel (Cut To Required Length) ●
240	394358	1	Filter-Fuel ●
276	692255	1	Washer-Sealing ●
601	95162	1	Clamp-Hose ●
634	690801	1	Spring / Seal ASM ●
634A	690802	1	Spring And Seal Asm ●
654	690958	1	Nut (Carburetor) ●
947	694393	1	Solenoid-Fuel ●
950	691657	1	Screw (Float Bowl) ●
975	495933	1	Bowl-Float ●
987	691326	1	Seal-Shaft, Throttle ●
1091	691333	1	Cap-Limiter ●

● Obtain parts from www.briggsandstratton.com

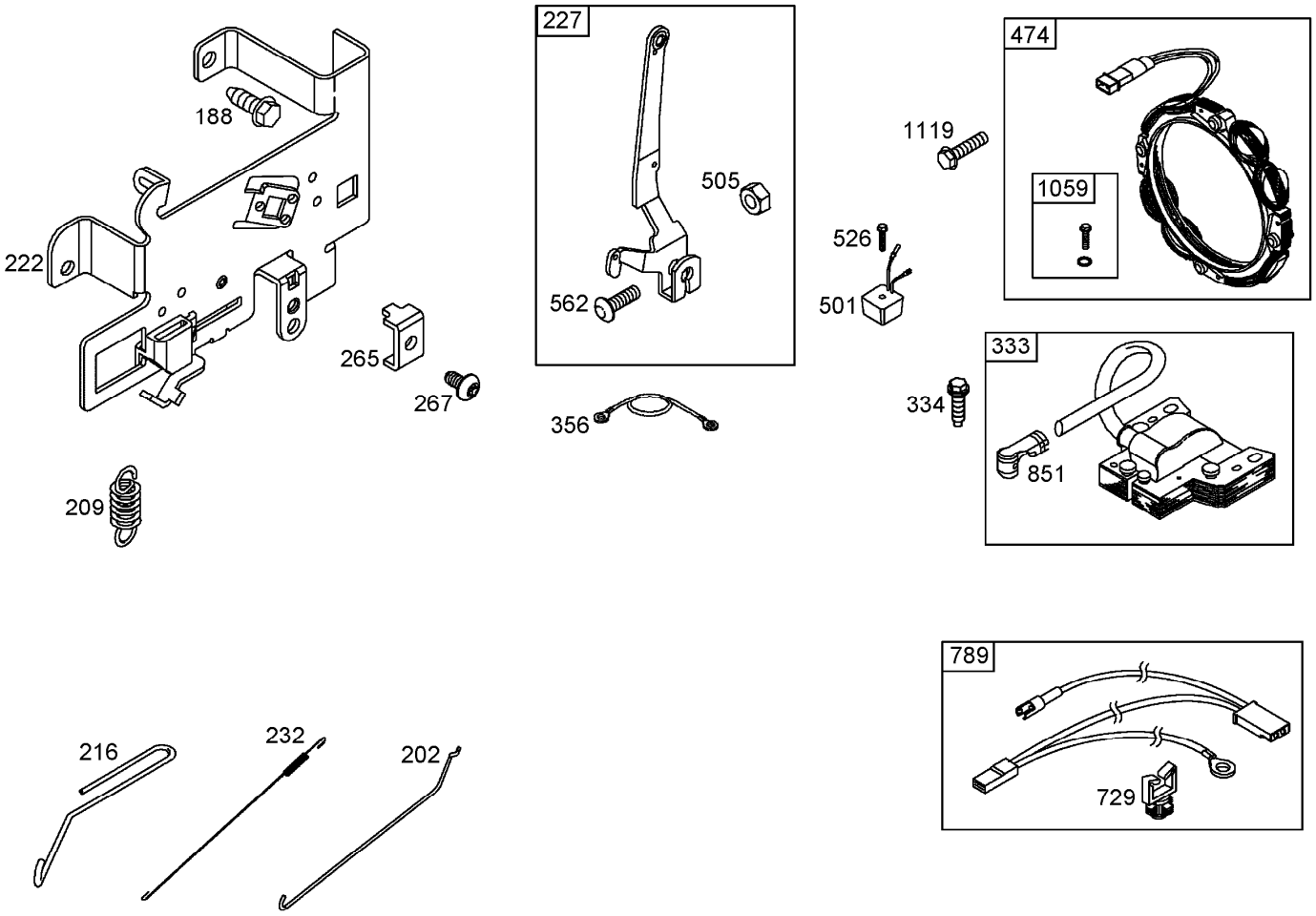

Governor Assembly
Briggs and Stratton 286H77-0165-E1

Ref.	Part Number	Qty.	Description
188	691693	1	Screw (Control Bracket) ●
202	691841	1	Link-Governor, Mechanical ●
209	692208	1	Spring-Governor ●
216	691840	1	Link-Choke ●
222	694042	1	Bracket-Control ●
227	691374	1	Lever-Control, Governor ●
232	691842	1	Spring-Link, Governor ●
265	691024	1	Clamp-Casing ●
267	695134	1	Screw (Casing Clamp) ●
333	492341	1	Armature-Magneto ●
334	691061	1	Screw (Magneto Armature) ●
356	697089	1	Stop-Wire ●
474	696457	1	Alternator (Used After Code Date 03021600) ●
	696458	1	Alternator (Used Before Code Date 03021700) ●

Ref.	Part Number	Qty.	Description
501	691188	1	Regulator (Used After Code Date 03021600) ●
	691185	1	Regulator (Used Before Code Date 03021700) ●
505	691251	1	Nut (Governor Control Lever) ●
526	697088	1	Screw (Used After Code Date 03021600) ●
	697348	1	Screw (Used Before Code Date 03021700) ●
562	691119	1	Bolt (Governor Control Lever) ●
729	691335	1	Clip wire ●
789	692037	1	Wiring-Harness ●
851	692424	1	Terminal spark Plug ●
1059	698516	1	Screw And Washer Kit ●
1119	691183	1	Screw (Alternator) ●

● Obtain parts from www.briggsandstratton.com

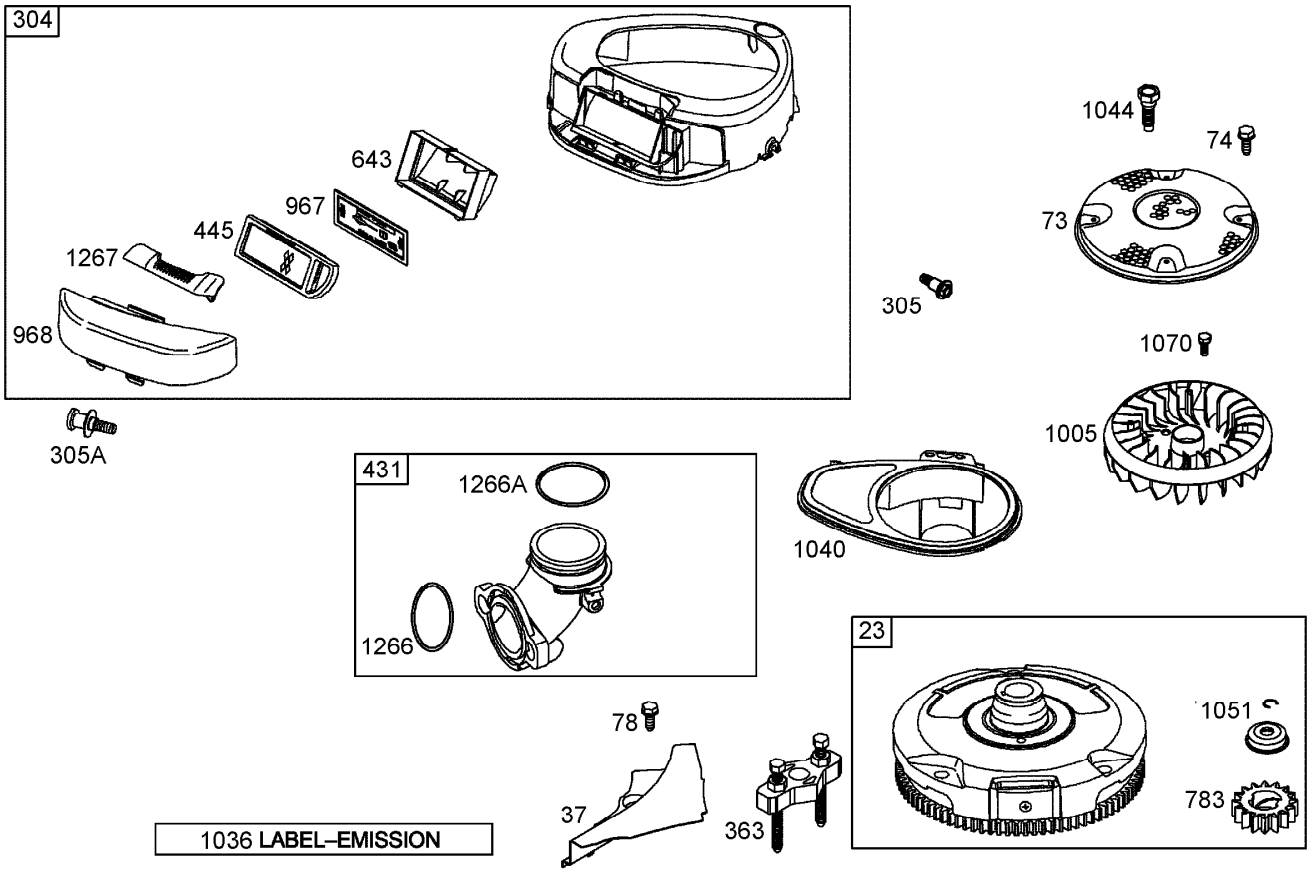

Blower Housing Assembly
Briggs and Stratton 286H77-0165-E1

Ref.	Part Number	Qty.	Description
23	693556	1	Flywheel ●
37	697352	1	Guard-Flywheel ●
73	697133	1	Screen-Rotating ●
74	697897	1	Screw (Rotating Screen) ●
78	691003	1	Screw (Flywheel Guard) ●
304	698599	1	Housing-Blower ●
305	697102	1	Screw (Blower Housing) ●
305A	697103	1	Screw (Blower Housing) ●
363	19203	1	Puller-Flywheel ●
431	697122	1	Elbow-Intake ●
445	698083	1	Filter-Cartridge, Air Cleaner ●
643	698401	1	Retainer-Filter, Air ●
783	693713	1	Gear-Pinion ●
967	697015	1	Filter-Cleaner, Pre ●

Ref.	Part Number	Qty.	Description
968	697084	1	Cover-Cleaner, Air ●
1005	699043	1	Fan-Flywheel ●
1036	790464	1	Label emission (Used After Code Date 04063000) ●
	695700	1	Label emission (Used Before Code Date 04070100) ●
1040	699852	1	Plate-Trim ●
1044	698139	1	Screw (Crankshaft Extension) ●
1051	691265	1	Ring-Retaining ●
1070	690372	1	Screw (Flywheel Fan) ●
1266	691917	1	Seal-O Ring ●
1266A	697123	1	Seal-O Ring ●
1267	697419	1	Latch-Housing, Blower ●

● Obtain parts from www.briggsandstratton.com

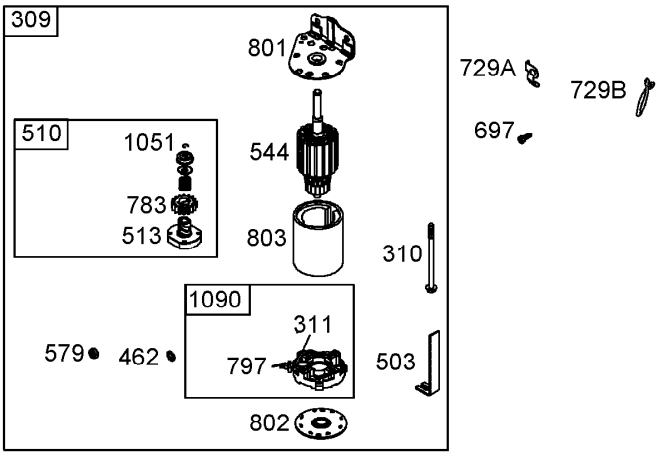

Starter Assembly
Briggs and Stratton 286H77-0165-E1

Ref.	*Part Number*	*Qty.*	*Description*
309	693551	1	Motor-Starter ●
310	690323	1	Bolt (Starter Motor) ●
311	497608	1	Brush Set ●
462	691261	1	Washer (Brush Retainer) ●
503	691532	1	Strap-Starter ●
510	693699	1	Drive-Starter ●
513	692024	1	Clutch-Drive ●
544	692034	1	Armature-Starter ●
579	691029	1	Nut (Brush Retainer) ●
697	690372	1	Screw (Drive Cap) ●
729A	691224	1	Clip-Wire ●
729B	694123	1	Clip wire ●
783	693713	1	Gear-Pinion ●
797	693167	1	Nut (Brush Retainer) ●
801	691283	1	Cap-Drive ●
802	691286	1	Cap-End ●
803	693757	1	Housing-Starter ●
1051	691265	1	Ring-Retaining ●
1090	691293	1	Retainer-Brush ●

● Obtain parts from www.briggsandstratton.com

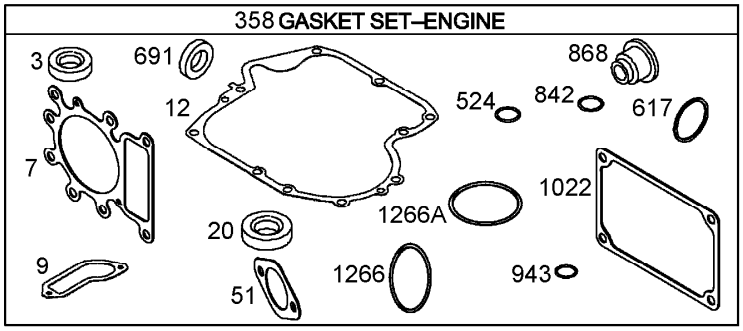

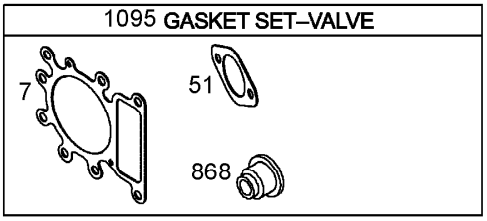

Gasket Assembly
Briggs and Stratton 286H77-0165-E1

Ref.	*Part Number*	*Qty.*	*Description*
3	391086	1	Seal-Oil ●
7	273280	1	Gasket-Head, Cylinder ●
9	697109	1	Gasket-Breather ●
12	697110	1	Gasket-Crankcase ●
20	690947	1	Seal-Oil ●
51	692137	1	Gasket-Intake ●
358	697151	1	Engine Gasket Set ●
617	692138	1	Seal-O Ring ●
524	691032	1	Seal-O Ring ●
691	692407	1	Seal-Shaft, Governor ●
842	691031	1	Seal-O Ring ●
868	690968	1	Seal-Valve ●
943	690589	1	Seal-O Ring ●
1022	272475	1	Gasket-Cover, Rocker ●
1095	691581	1	Valve Gasket Set ●
1266	691917	1	Seal-O Ring ●
1266A	697123	1	Seal-O Ring ●

● Obtain parts from www.briggsandstratton.com

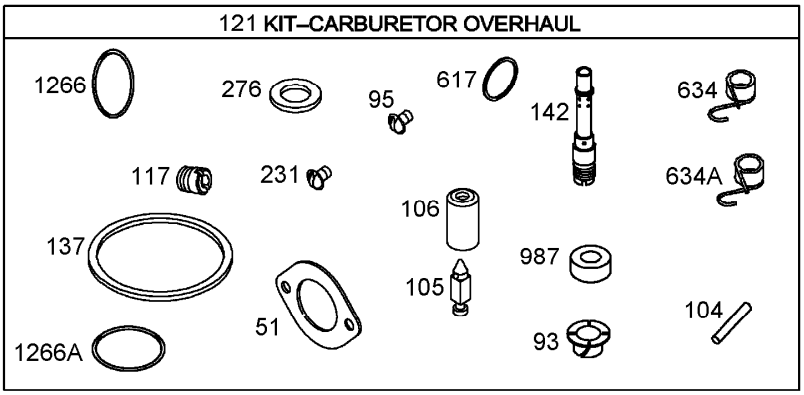

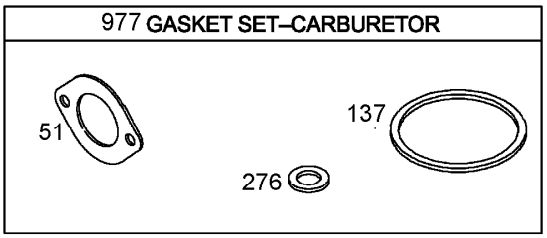

Carburetor Overhaul Kit
Briggs and Stratton 286H77-0165-E1

Ref.	*Part Number*	*Qty.*	*Description*
51	692137	1	Gasket-Intake ●
93	690602	1	Bushing-Shaft, Throttle ●
95	691636	1	Screw (Throttle Valve) ●
104	690525	1	Pin-Hinge, Carburetor Float ●
105	231855	1	Valve-Needle, Float ●
106	690577	1	Seat-Inlet ●
117	694352	1	Jet-Main (Std) ●
121	697154	1	Carburetor Overhaul Kit ●
137	281165	1	Gasket-Bowl, Float ●
142	697140	1	Nozzle-Carburetor ●
231	691636	1	Screw (Choke Valve) ●
276	692255	1	Washer-Sealing ●
617	692138	1	Seal-O Ring ●
634	690801	1	Spring / Seal ASM ●
634A	690802	1	Spring And Seal Asm ●
977	690192	1	Carburetor Gasket Set ●
987	691326	1	Seal-Shaft, Throttle ●
1266	691917	1	Seal-O Ring ●
1266A	697123	1	Seal-O Ring ●

● Obtain parts from www.briggsandstratton.com

Attachments and Accessories

For 71428 XL 380H Lawn Tractor

Product Name	Model/Part
Counterweight Kit	100-6230
8 Inch Rear Wheel Weight Kit	59159
9.0 cu. ft. Twin Bagger	79103
6.0 cu. ft. Easy-Empty Grass Catcher	79117
42 Inch Snow Blade	79150
Recycler Kit	79170
10 cu. ft. Dump Cart	79901
Snow Cab	79912
Sunshade	79913
10 cu. ft. Poly Dump Cart	79935
Folding Loading Ramp	79949
Sweeper	79985
Tractor Rack	79990
Tire Chains Kit	82311
Anti-Scalp Roller Kit	93-3898
Exhaust Deflector	94-6872
Tower Kit	98-9880

Notes:

Notes:

TORO®

Count on it.