Form No. 3373-671 Rev B

Powerlite® Snowthrower

Model No. 38273—Serial No. 313000001 and Up

Model No. 38283—Serial No. 313000001 and Up

Operator's Manual

Preliminary

Introduction

This machine is intended to be used by residential homeowners or professional, hired operators. It is designed primarily for removing snow from paved surfaces, such as driveways and sidewalks, and other surfaces for traffic on residential or commercial properties. It is not designed for removing materials other than snow, nor is it designed for clearing off gravel surfaces.

Read this information carefully to learn how to operate and maintain your machine properly and to avoid injury and machine damage. You are responsible for operating the machine properly and safely.

You may contact Toro directly at www.Toro.com for machine and accessory information, help finding a dealer, or to register your machine.

Whenever you need service, genuine Toro parts, or additional information, contact an Authorized Service Dealer or Toro Customer Service and have the model and serial numbers of your machine ready. Figure 1 identifies the location of the model and serial numbers on the machine. Write the numbers in the space provided.

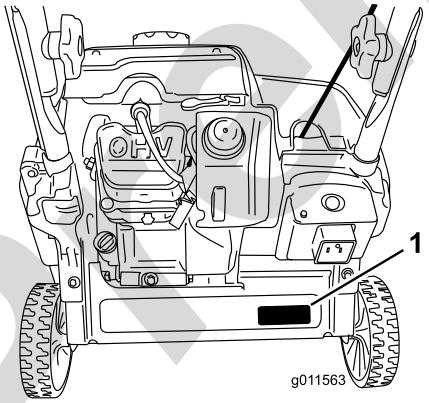

Figure 1

1. Model and serial number location

Model No. _____

Serial No. _____

This manual identifies potential hazards and has safety messages identified by the safety alert symbol (Figure 2), which signals a hazard that may cause serious injury or death if you do not follow the recommended precautions.



Figure 2

1. Safety alert symbol

This manual uses 2 words to highlight information. **Important** calls attention to special mechanical information and **Note** emphasizes general information worthy of special attention.

Contents

Introduction 1
- Training 2
- Preparation 2
- Operation 2
- Clearing a Clogged Discharge Chute 3
- Maintenance and Storage 3
- Toro Snowthrower Safety 3
- Sound Pressure 3
- Sound Power 3
- Hand-Arm Vibration 4
- Safety and Instructional Decals 4

Setup 5
- 1 Installing the Handle 5
- 2 Installing the Recoil Starter Handle 5
- 3 Installing the Discharge Chute Assembly 6
- 4 Filling the Engine with Oil 6
- 5 Adjusting the Control Cable 7

Product Overview 8

Operation 9
- Filling the Fuel Tank 9
- Checking the Engine Oil Level 9
- Starting the Engine 11
- Engaging the Rotor Blades 12
- Disengaging the Rotor Blades 12
- Stopping the Engine 12
- Adjusting the Discharge Chute and Chute Deflector 13
- Clearing a Clogged Discharge Chute 13
- Self-propelling the Machine 13
- Preventing Freeze-up after Use 13

© 2012—The Toro® Company
8111 Lyndale Avenue South
Bloomington, MN 55420

Register at www.Toro.com.

CE

Original Instructions (EN)
Printed in the USA
All Rights Reserved

3373-671 B

Operating Tips 14
Maintenance 15
Recommended Maintenance Schedule(s) 15
Adjusting the Control Cable.....15
Inspecting the Rotor Blades 15
Changing the Engine Oil 15
Servicing the Spark Plug.....16
Storage 17
Storing the Machine.....17

Safety

This machine meets or exceeds the ISO standard 8437 in effect at the time of production.

Read and understand the contents of this manual before you start the engine.

⚠This is the safety alert symbol. It is used to alert you to potential personal injury hazards. Obey all safety messages that follow this symbol to avoid possible injury or death.

Improperly using or maintaining this machine could result in injury or death. To reduce this potential, comply with the following safety instructions.

Training

- Read, understand, and follow all instructions on the machine and in the manual(s) before operating this machine. Be thoroughly familiar with the controls and the proper use of the machine. Know how to stop the machine and disengage the controls quickly.
- Never allow children to operate the machine. Never allow adults to operate the machine without proper instruction.
- Keep the area of operation clear of all persons, particularly small children.
- Exercise caution to avoid slipping or falling.

Preparation

- Thoroughly inspect the area where the machine is to be used and remove all doormats, sleds, boards, wires, and other foreign objects.
- Do not operate the machine without wearing adequate winter garments. Avoid loose fitting clothing that can get caught in moving parts. Wear footwear that will improve footing on slippery surfaces.
- Handle fuel with care; it is highly flammable.
  - Use an approved fuel container.
  - Never add fuel to a running engine or hot engine.
  - Fill fuel tank outdoors with extreme care. Never fill the fuel tank indoors.
  - Never fill containers inside a vehicle or on a truck or trailer bed with a plastic liner. Always place containers on the ground, away from your vehicle, before filling.
  - When practical, remove gas-powered machinery from the truck or trailer and refuel it on the ground. If this is not possible, then refuel such machinery on a trailer with a portable container, rather than from a gasoline dispenser nozzle.
  - Keep the nozzle in contact with the rim of the fuel tank or container opening at all times, until refueling is complete. Do not use a nozzle lock-open device.
  - Replace gasoline cap securely and wipe up spilled fuel.
  - If fuel is spilled on clothing, change clothing immediately.
  - Do not smoke while handling gasoline.
- Use extension cords and receptacles as specified by the manufacturer for all machines with electric starting motors.
- Do not attempt to clear snow from a gravel or crushed rock surface. This machine is intended for use only on paved surfaces.
- Never attempt to make any adjustments while the engine is running (except when specifically recommended by manufacturer).
- Always wear safety glasses or eye shields during operation or while performing an adjustment or repair to protect eyes from foreign objects that may be thrown from the machine.
- Let the engine and machine adjust to outdoor temperatures before starting to clear the snow.

Operation

- Do not put hands or feet near or under rotating parts. Keep clear of the discharge opening at all times.
- Exercise extreme caution when operating on or crossing gravel drives, walks, or roads. Stay alert for hidden hazards or traffic.
- After striking a foreign object, stop the engine, remove the ignition key, thoroughly inspect the machine for any damage, and repair the damage before restarting and operating the machine.
- If the machine should start to vibrate abnormally, stop the engine and check immediately for the cause. Vibration is generally a warning of trouble.
- Stop the engine whenever you leave the operating position, before unclogging the rotor blade housing or discharge chute, and when making any repairs, adjustments or inspections.
- When cleaning, repairing, or inspecting the machine, stop the engine and make certain that the rotor blades and all moving parts have stopped.
- Do not run the engine indoors, except when starting the engine and for transporting the machine in or out of the building. Open the outside doors; exhaust fumes are dangerous.
- Exercise extreme caution when operating on slopes.

Preliminary

- Never operate the machine without proper guards and other safety protective devices in place and working.
- Never direct the discharge toward people or areas where property damage can occur. Keep children and others away.
- Do not overload the machine capacity by attempting to clear snow at too fast a rate.
- Look behind and use care when backing up with the machine.
- Disengage power to the rotor blades when the machine is being transported or not in use.
- Never operate the machine without good visibility or light. Always be sure of your footing, and keep a firm hold on the handles. Walk; never run.
- Never touch a hot engine or muffler (Figure 3).

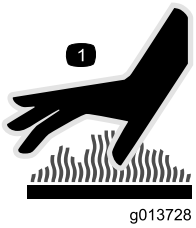

Figure 3

Clearing a Clogged Discharge Chute

Hand contact with the rotating rotor blades inside the discharge chute is the most common cause of injury associated with snow throwers. Never use your hand to clean out the discharge chute.

To clear the chute:

- **Shut the engine off!**
- Wait 10 seconds to be sure the rotor blades have stopped rotating.
- Always use a clean-out tool, not your hands.

Maintenance and Storage

- Check all fasteners at frequent intervals for proper tightness to be sure the machine is in safe working condition.
- Never store the machine with fuel in the fuel tank inside a building where ignition sources are present, such as hot water heaters, space heaters, or clothes dryers. Allow the engine to cool before storing in any enclosure.
- Always refer to the *Operator's Manual* for important details if the machine is to be stored for an extended period of time.
- Maintain or replace safety and instruction labels, as necessary.
- Run the machine briefly after throwing snow to prevent freeze-up of the rotor blades.

Toro Snowthrower Safety

The following list contains safety information specific to Toro products or other safety information that you must know.

- **Rotating rotor blades can injure fingers or hands.** Stay behind the handles and away from the discharge opening while operating the machine. **Keep your face, hands, feet, and any other part of your body or clothing away from moving or rotating parts.**
- Before adjusting, cleaning, repairing, and inspecting the machine, and before unclogging the discharge chute, **stop the engine, remove the key, and wait for all moving parts to stop.**
- **Before** leaving the operating position, stop the engine, remove the ignition key, and wait for all moving parts to stop.
- If a shield, safety device, or decal is damaged, illegible, or lost, repair or replace it before beginning operation. Also, tighten any loose fasteners.
- **Do not** smoke while handling gasoline.
- **Do not** use the machine on a roof.
- Do not touch the engine while it is running or soon after it has stopped because the engine may be hot enough to cause a burn.
- Perform only those maintenance instructions described in this manual. Before performing any maintenance, service, or adjustment, stop the engine and remove the key. If major repairs are ever needed, contact an Authorized Service Dealer.
- Do not change the governor settings on the engine.
- When storing the machine for more than 30 days, drain the fuel from the fuel tank to prevent a potential hazard. Store fuel in an approved fuel container. Remove the key from the ignition switch before storing the machine.
- Purchase only genuine Toro replacement parts and accessories.

Sound Pressure

This machine has a sound pressure level at the operator's ear of 88 dBA, which includes an Uncertainty Value (K) of 1 dBA. The sound pressure level was determined according to the procedures outlined in EN ISO 11201.

Sound Power

This machine has a guaranteed sound power level of 104 dBA, which includes an Uncertainty Value (K) of 3.75 dBA. The sound power level was determined according to the procedures outlined in EN ISO 3744.

Preliminary

Hand-Arm Vibration

Measured vibration level for the left hand = 8.4 m/s²

Measured vibration level for the right hand = 10.7 m/s²

Uncertainty Value (K) = 4.3 m/s²

The measured values were determined according to the procedures outlined in EN ISO 20643.

Safety and Instructional Decals

Important: Safety and instruction decals are located near areas of potential danger. Replace damaged decals.

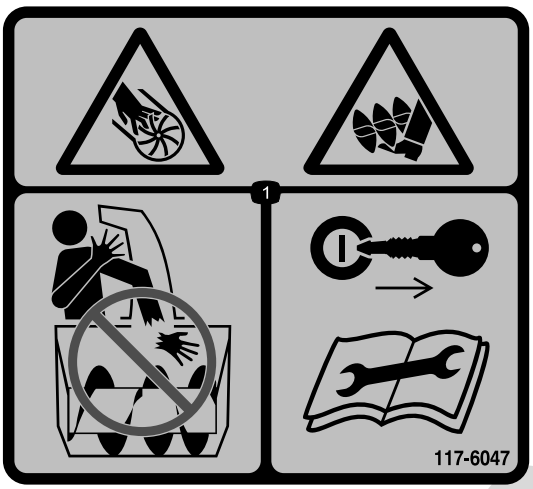

117-6047

Order part no. 117-7742

1. Cutting dismemberment, impeller and cutting dismemberment, auger hazards—do not place your hand in the chute; remove the ignition key and read the instructions before servicing or performing maintenance.

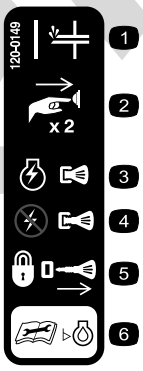

120-0149

1. Primer
2. Push the primer two times to prime the engine.
3. Push key in to switch engine On.
4. Pull key to switch engine switch Off.
5. Remove key to lock machine.
6. Read the *Operator's Manual* before checking engine oil level.



117-7713

1. Warning—read the *Operator's Manual*.
2. Cutting/dismemberment hazard, impeller—stop the engine before leaving the machine.
3. Thrown object hazard—keep bystanders a safe distance from the machine.
4. Fuel spill hazard—do not tip machine forward or backward.
5. To engage the auger, squeeze the control bar.
6. Release the control bar to disengage the auger.

Preliminary

Setup

Loose Parts

Use the chart below to verify that all parts have been shipped.

Procedure	Description	Qty.	Use
1	Oval-head bolts Curved washers Handle knobs	2 2 2	Install the handle.
2	No parts required	–	Install the recoil starter handle.
3	Discharge chute assembly Screws Washers Locknuts Knob	1 2 2 2 1	Install the discharge chute assembly.
4	Bottle of engine oil	1	Fill the engine with oil.
5	No parts required	–	Adjust the control cable.

1

Installing the Handle

Parts needed for this procedure:

2	Oval-head bolts
2	Curved washers
2	Handle knobs

Procedure

1. Position the ends of the upper handle on the inside of the lower handle and align the holes.
2. Insert the oval-head bolts into the aligned holes, with the bolt heads on the outside of the handle (Figure 4).

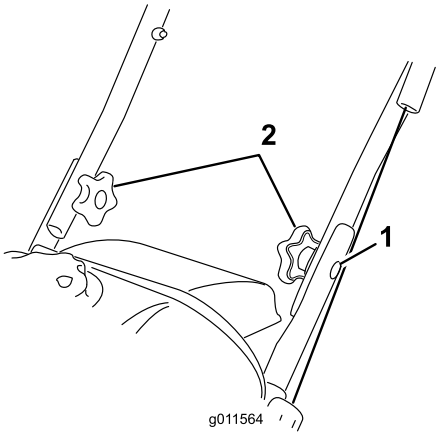

Figure 4

1. Oval-head bolt (2)
2. Curved washers and handle knobs

3. Install the curved washers and the handle knobs on the oval-head bolts on the inside of the handle (Figure 4) and **tighten the knobs securely**.

Important: Ensure that the cable is routed to the outside of the handle.

Preliminary

2

Installing the Recoil Starter Handle

No Parts Required

Procedure

Install the recoil starter handle in the rope guide as shown in Figure 5.

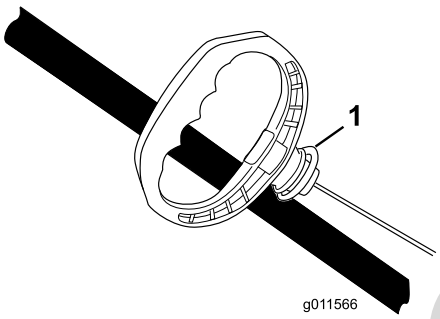

Figure 5

1. Rope guide

3

Installing the Discharge Chute Assembly

Parts needed for this procedure:

1	Discharge chute assembly
2	Screws
2	Washers
2	Locknuts
1	Knob

Procedure

Install the discharge chute assembly as shown in Figure 6.

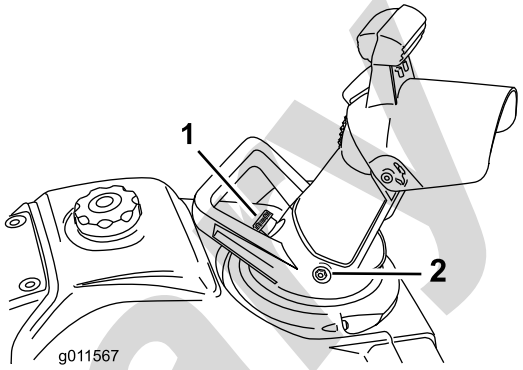

Figure 6

1. Knob
2. Bolt (2), washer (2), and locknut (2)

Note: Install the bolts from the inside of discharge chute assembly so that the washers and locknuts are on the outside of the chute.

Important: Do not overtighten the locknuts.

4

Filling the Engine with Oil

Parts needed for this procedure:

1	Bottle of engine oil

Procedure

Your machine does not come with oil in the engine, but it does come with a bottle of oil.

Important: Before starting the engine, fill the engine with oil.

Max fill: 12 oz. (0.35 l), type: automotive detergent oil with an API service classification of SJ, SL, or higher.

Use Figure 7 to select the best oil viscosity for the outdoor temperature range expected:

Preliminary

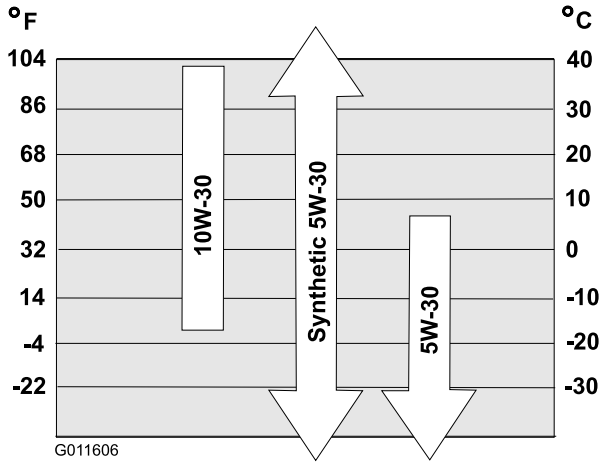

Figure 7

1. Move the machine to a level surface.
2. Clean around the oil fill cap (Figure 8).
3. Unscrew the oil fill cap and remove it.
4. **Slowly** pour oil into the oil fill hole. Wait 3 minutes, then check the oil level on the dipstick by wiping the dipstick clean and then inserting, **but not screwing in,** the oil fill cap into the hole.

   Note: To determine the proper oil level on the dipstick, refer to Figure 8.

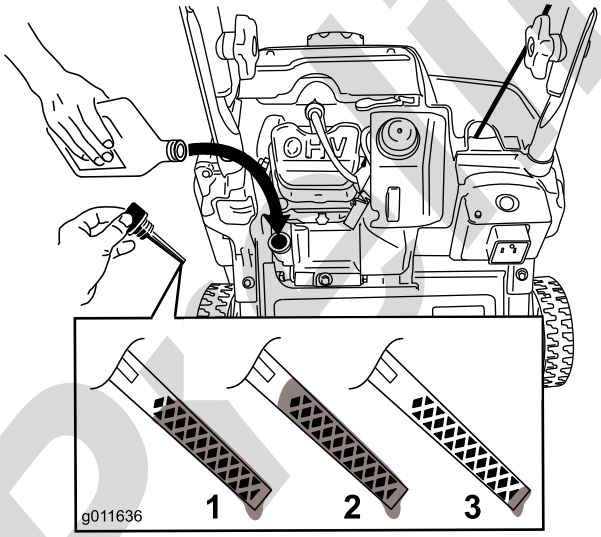

Figure 8

1. The oil level is at its maximum.
2. The oil level is too high—remove oil from the crankcase.
3. The oil level is too low—add oil to the crankcase.

Note: Fill the engine crankcase with oil until the dipstick indicates that the engine oil level is correct as shown in Figure 8. If you overfill the engine with oil, remove the excess oil as directed in Changing the Engine Oil.

Note: You may tip the machine forward (handle up) a little to make adding oil easier. Remember to return the machine to the operating position before checking the oil level.

Important: Do not tip the machine all the way forward onto its nose, or fuel may leak out of the machine.

5. Screw the oil fill cap into the oil fill hole and hand tighten it securely.

5

Adjusting the Control Cable

No Parts Required

Checking the Control Cable

Service Interval: After the first hour—Check the control cable and adjust it if necessary.

Yearly—Check the control cable and adjust it if necessary.

Important: You must check and may need to adjust the control cable before you operate the machine for the first time.

Move the control bar back toward the handle to remove the slack in the control cable (Figure 9).

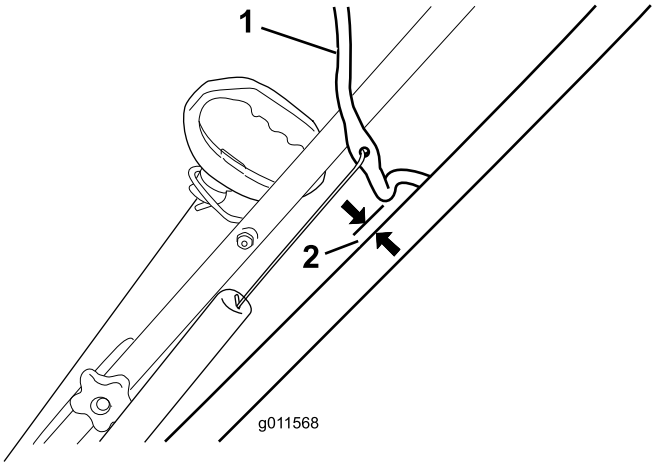

Figure 9

1. Control bar
2. 1/16 to 1/8 inch (2 to 3 mm)

Note: Ensure that a gap of 1/16 to 1/8 inch (2 to 3 mm) exists between the control bar and the handle (Figure 9).

Important: The control cable must contain some slack when you disengage the control bar for the rotor blades to stop properly.

Preliminary

Adjusting the Control Cable

1. Slide up the spring cover and unhook the spring from the adjuster link (Figure 10).

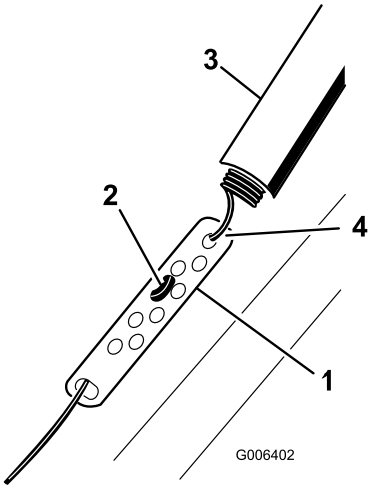

Figure 10

1. Adjuster link
2. Z-fitting
3. Spring cover
4. Unhook the spring here.

Note: You can pull up the adjuster link and cable to make unhooking the spring easier.

2. Move the Z-fitting to a higher or lower hole on the adjuster link as needed to obtain the 1/16-inch to 1/8-inch (2 mm to 3 mm) gap between the control bar and the handle (Figure 10).

Note: Moving the Z-fitting higher decreases the gap between the control bar and the handle; moving it lower increases the gap.

3. Hook the spring to the adjuster link and slide the spring cover over the adjuster link.
4. Check the adjustment; refer to Checking the Control Cable.

Note: The belt may slip (squeal) in wet conditions; to dry out the drive system, start the rotor and run it without a load for 30 seconds.

Product Overview

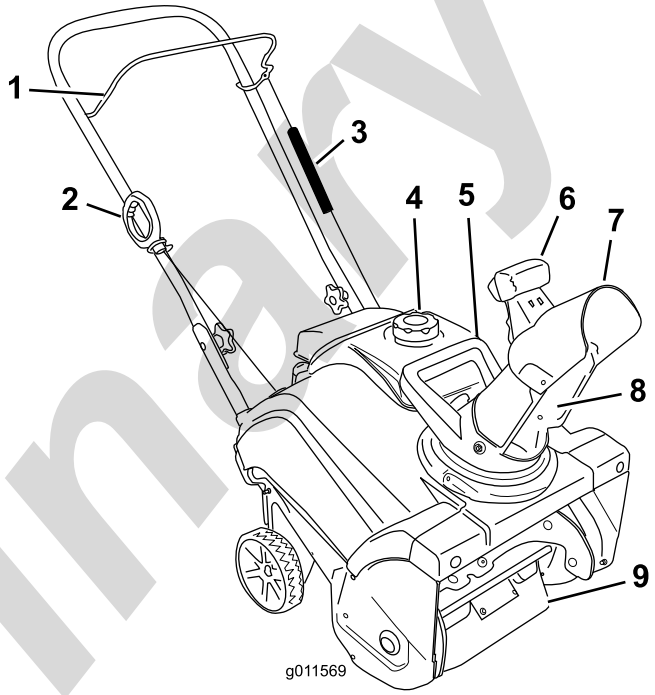

Figure 11

1. Control bar
2. Recoil start handle
3. Spring cover
4. Fuel tank cap
5. Chute handle
6. Chute deflector trigger
7. Chute deflector
8. Discharge chute
9. Rotor blades

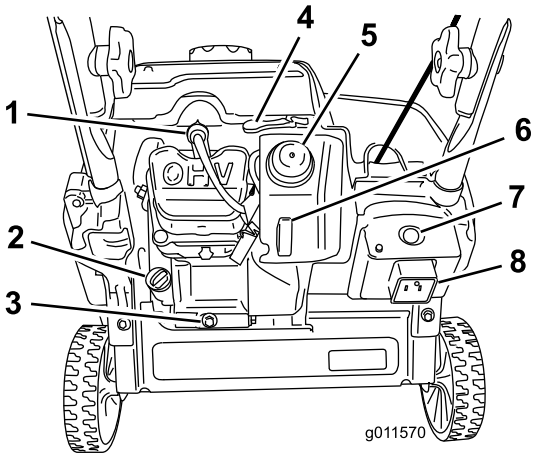

Figure 12

1. Spark plug
2. Oil fill cap
3. Oil drain plug
4. Choke lever
5. Primer
6. Ignition key
7. Electric-start button (model 38283 only)
8. Plug-in for electric start (model 38283 only)

Preliminary

Operation

Note: Determine the left and right sides of the machine from the normal operating position.

⚠ DANGER

Gasoline is extremely flammable and explosive. A fire or explosion from gasoline can burn you and others.

- **To prevent a static charge from igniting the gasoline, place the container and/or machine on the ground before filling, not in a vehicle or on an object.**
- **Fill the tank outdoors when the engine is cold. Wipe up spills.**
- **Do not handle gasoline when smoking or around an open flame or sparks.**
- **Store gasoline in an approved fuel container, out of the reach of children.**
- **Do not tip the machine either forward or backward with fuel in the fuel tank; otherwise, fuel may leak out of the machine.**

Filling the Fuel Tank

- For best results, use only clean, fresh, unleaded gasoline with an octane rating of 87 or higher ((R+M)/2 rating method).
- Oxygenated fuel with up to 10% ethanol or 15% MTBE by volume is acceptable.
- **Do Not** use ethanol blends of gasoline (such as E15 or E85) with more than 10% ethanol by volume. Performance problems and/or engine damage may result which may not be covered under warranty.
- **Do Not** use gasoline containing methanol.
- **Do Not** store fuel either in the fuel tank or fuel containers over the winter unless a fuel stabilizer is used.
- **Do Not** add oil to gasoline.

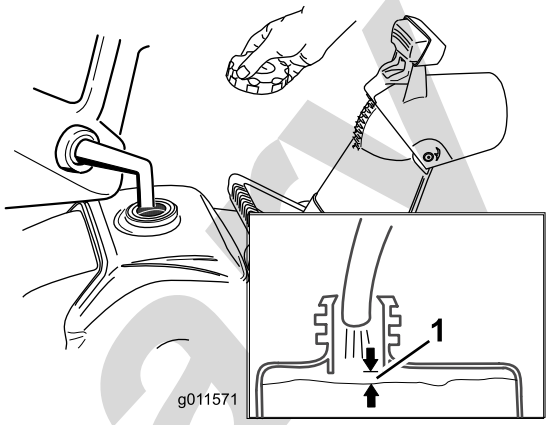

Figure 13

1. 1/2 inch (13 mm)

Note: For best results, purchase only the quantity of gasoline that you expect to use in 30 days. Otherwise, you may add fuel stabilizer to newly purchased gasoline to keep it fresh for up to 6 months.

Checking the Engine Oil Level

Service Interval: Before each use or daily—Check the engine oil level and add oil if necessary.

1. Ensure that the fuel tank is not overfilled (refer to Figure 13) and that the fuel cap is securely in place.
2. Move the machine to a level surface.
3. Clean around the oil fill cap (Figure 14).
4. Unscrew the oil fill cap and remove it.
5. Wipe the dipstick on the oil fill cap with a clean cloth.
6. Insert, **but do not screw in**, the oil fill cap into the oil fill hole.
7. Remove the oil fill cap and check the dipstick.
8. To determine the proper oil level on the dipstick, refer to Figure 14.

Preliminary

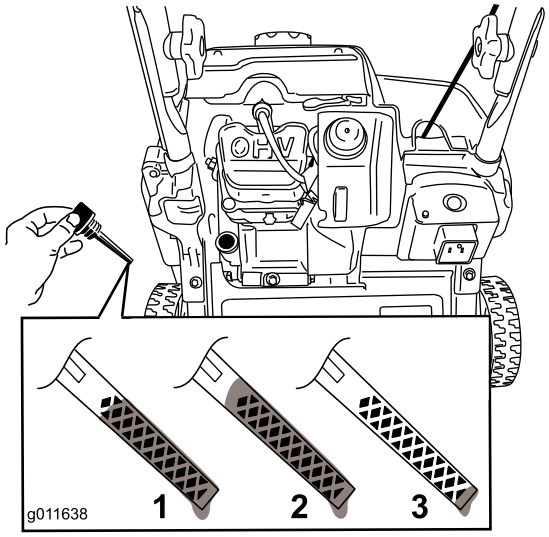

Figure 14

1. The oil level is at its maximum.
2. The oil level is too high—remove oil from the crankcase.
3. The oil level is too low—add oil to the crankcase.

9. If the oil level is low, **slowly** pour oil into the oil fill hole. Wait 3 minutes, then check the oil level on the dipstick by wiping the dipstick clean and then inserting, **but not screwing in,** the oil fill cap into the hole.

   Note: You may tip the machine forward (handle up) a little to make adding oil easier. Remember to return the machine to the operating position before checking the oil level.

   Important: Do not tip the machine all the way forward onto its nose, or fuel may leak out of the machine.

   Max fill: 12 oz. (0.35 l), type: automotive detergent oil with an API service classification of SJ, SL, or higher.

   Use Figure 15 to select the best oil viscosity for the outdoor temperature range expected:

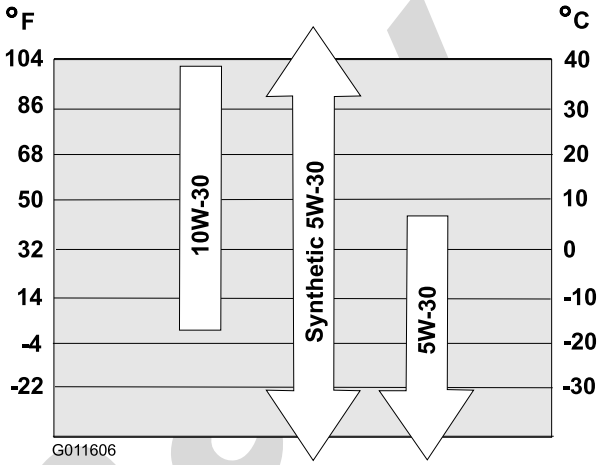

Figure 15

   Note: Fill the engine crankcase with oil until the dipstick indicates that the engine oil level is correct as shown in Figure 15. If you overfill the engine with oil, remove the excess oil as directed in Changing the Engine Oil.

10. Screw the oil fill cap into the oil fill hole and hand tighten it securely.

Preliminary

Starting the Engine

1. Push the ignition key fully inward to the On position (Figure 16).

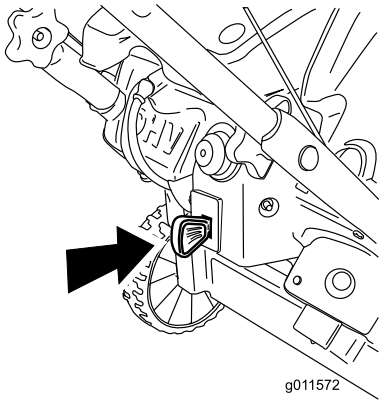

Figure 16

2. Move the choke lever fully to the right (Figure 17).

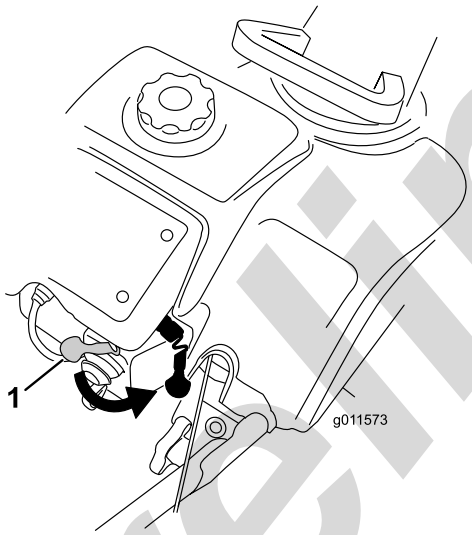

Figure 17

1. Choke lever

3. Firmly push in the primer 2 times with your thumb, holding the primer in for a second before releasing it each time (Figure 18).

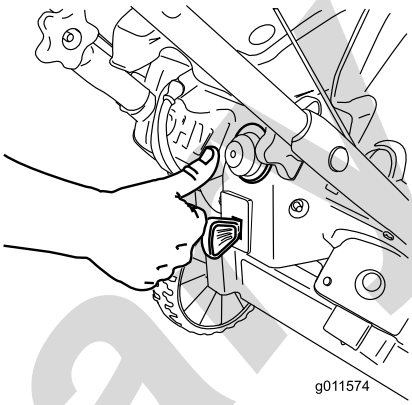

Figure 18

Note: Remove your glove when you push in the primer so that air cannot escape from the primer hole.

Important: Do not use the primer or the choke if the engine has been running and is hot. Excessive priming may flood the engine and prevent it from starting.

4. Connect an extension cord to a power source and the machine, and push the electric-start button (model 38283 only) (Figure 19), or pull the recoil start handle (Figure 20).

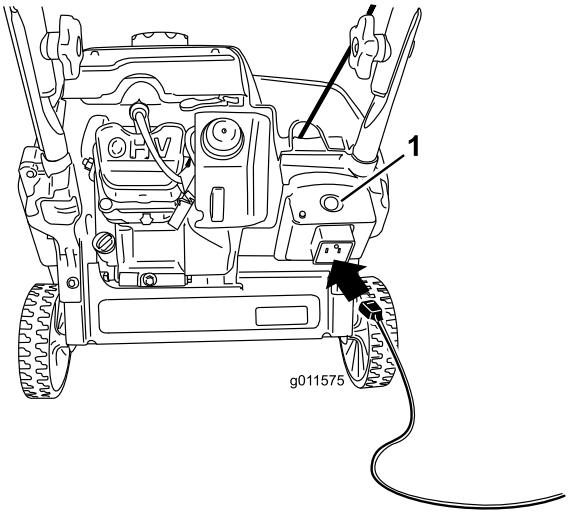

Figure 19

1. Electric-start button

Note: Use only a 16-gauge extension cord recommended for outdoor use that is not longer than 50 feet (15 m).

Preliminary

⚠ WARNING

The electrical cord can become damaged, causing a shock or fire.

Thoroughly inspect the electrical cord before plugging it into a power source. If the cord is damaged, do not use it to start the machine. Replace or repair the damaged cord immediately. Contact an Authorized Service Dealer for assistance (model 38283 only).

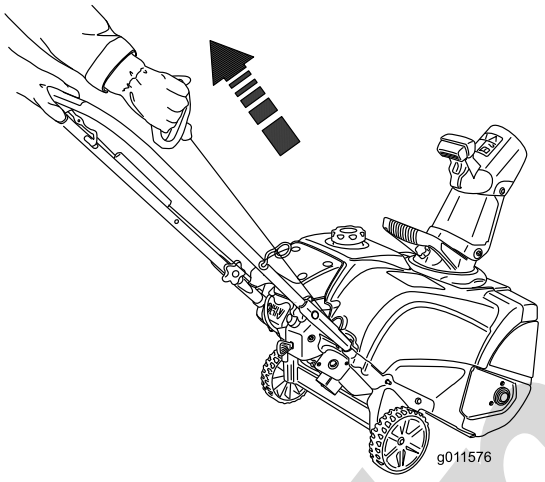

Figure 20

Important: Run the electric starter no more than 10 times at intervals of 5 seconds on, then 5 seconds off. Running the electric starter extensively can overheat and damage it. If the engine does not start after this series of attempts, wait at least 40 minutes to allow the starter to cool before attempting to start it again. If the engine does not start after the second series of attempts, take the machine to an Authorized Service Dealer for service (model 38283 only).

Note: If the recoil starter does not operate properly, it may be frozen. Thaw out the starter before attempting to start the machine.

5. While the engine is running, move the choke lever gradually to the left.
6. Unplug the extension cord from the power source and the machine (model 38283 only).

⚠ CAUTION

If you leave the machine plugged into a power source, someone can inadvertently start the machine and injure people or damage property.

Unplug the power cord whenever you are not starting the machine (model 38283 only).

Engaging the Rotor Blades

To engage the rotor blades, hold the control bar against the handle (Figure 21).

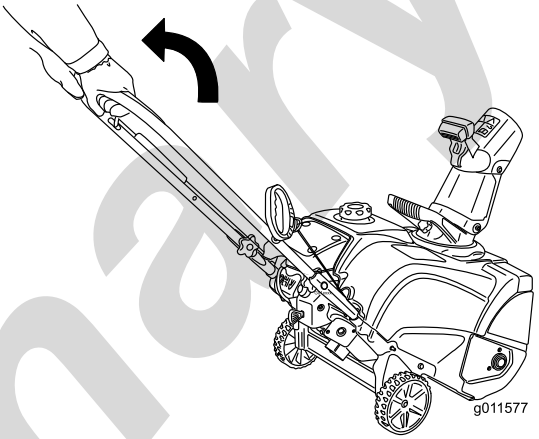

Figure 21

1. Control bar

Disengaging the Rotor Blades

To disengage the rotor blades, release the control bar (Figure 22).

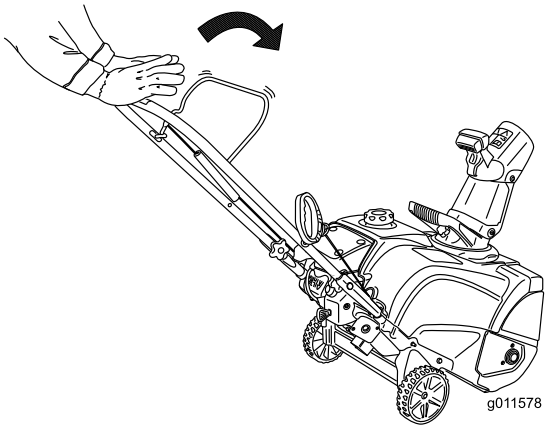

Figure 22

Stopping the Engine

To stop the engine, pull the ignition key outward until it clicks into the Off position (Figure 23) or move the choke lever fully to the right (Figure 17).

Preliminary

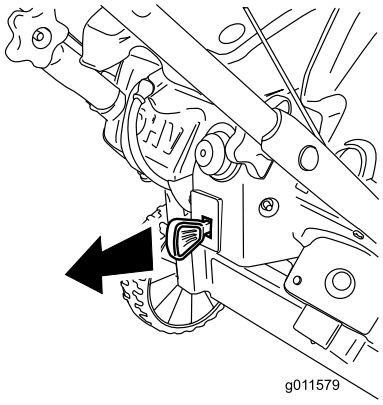

Figure 23

Adjusting the Discharge Chute and Chute Deflector

To adjust the discharge chute, move the chute handle as shown in Figure 24.

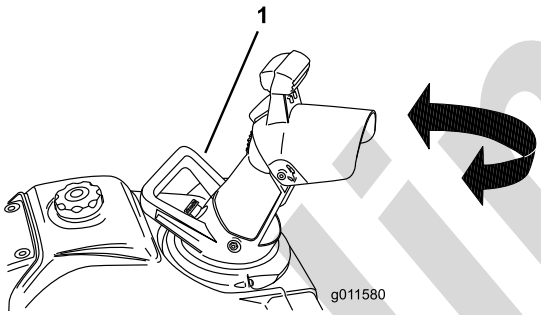

Figure 24

1. Chute handle

To raise or lower the angle of the chute deflector, press the trigger on the chute deflector and move the chute deflector up or down (Figure 25). Release the trigger to lock the chute deflector in place.

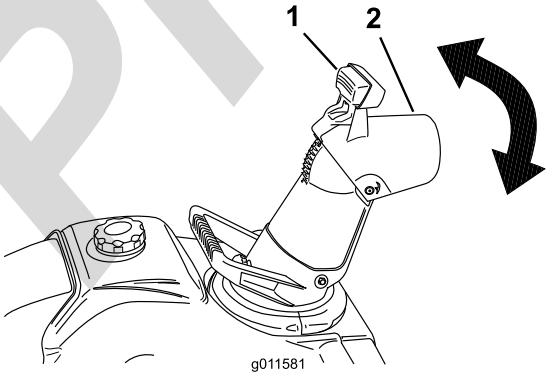

Figure 25

1. Trigger
2. Chute deflector

Clearing a Clogged Discharge Chute

Important: Hand contact with the rotating rotor blades inside the discharge chute is the most common cause of injury associated with machine. Never use your hand to clean out the discharge chute.

To clear the chute:

- **Shut the engine off!**
- Wait 10 seconds to be sure the rotor blades have stopped rotating.
- Always use a clean-out tool, not your hands.

Self-propelling the Machine

Lift the handle until the wheels are just off the ground and the scraper and rotor blades touch the ground, The machine will propel forward (Figure 26).

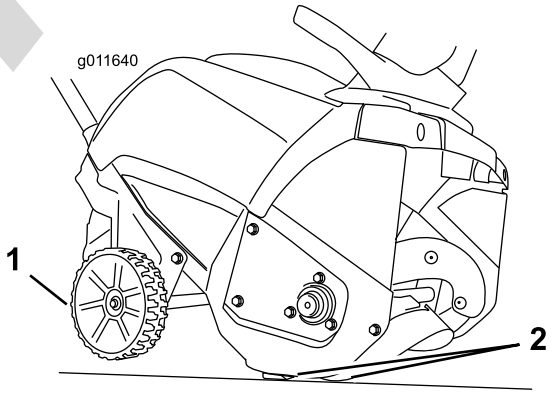

Figure 26

1. Wheels off the ground
2. Scraper and rotor blades in contract with the ground

Note: By slightly varying lifting force on the handle, you can control the forward speed of the machine. In heavy snow, push forward on the handle, if necessary, but let the machine work at its own pace. Do not lift the handle any more than necessary, because the scraper will lift off the ground and snow will escape behind the machine.

Preventing Freeze-up after Use

- Let the engine run for a few minutes to prevent moving parts from freezing. Stop the engine, wait for all moving parts to stop, and remove ice and snow from the machine.
- Clean off any snow and ice from the base of the chute.
- Rotate the discharge chute left and right to free it from any ice buildup.
- With the ignition key in the Off position, pull the recoil starter handle several times or connect the electrical cord to a power source and the machine and push the electric

Preliminary

start button once to prevent the recoil starter and/or the electric starter from freezing up.

- In snowy and cold conditions, some controls and moving parts may freeze. Do not use excessive force when trying to operate frozen controls. If you have difficulty operating any control or part, start the engine and let it run for a few minutes.

Operating Tips

⚠ WARNING

The rotor blades can throw stones, toys, and other foreign objects and cause serious personal injury to the operator or to bystanders.

- **Keep the area to be cleared free of all objects that the rotor blades could pick up and throw.**
- **Keep all children and pets away from the area of operation.**

- Remove the snow as soon as possible after it falls.
- Overlap each swath to ensure complete snow removal.
- Discharge the snow downwind whenever possible.

Preliminary

Maintenance

Note: Determine the left and right sides of the machine from the normal operating position.

Recommended Maintenance Schedule(s)

Maintenance Service Interval	Maintenance Procedure
After the first hour	• Check the control cable and adjust it if necessary. • Check for loose fasteners and tighten them if necessary.
After the first 2 hours	• Change the engine oil.
Before each use or daily	• Check the engine oil level and add oil if necessary.
Yearly	• Check the control cable and adjust it if necessary. • Inspect the rotor blades and have an Authorized Service Dealer replace the rotor blades and scraper if necessary. • Change the engine oil. • Service the spark plug and replace it if necessary. • Check for loose fasteners and tighten them if necessary. • Have an Authorized Service Dealer inspect the drive belt and replace it if necessary.
Yearly or before storage	• Prepare the machine for storage.

Adjusting the Control Cable

Refer to Adjusting the Control Cable in Setup.

Inspecting the Rotor Blades

Service Interval: Yearly—Inspect the rotor blades and have an Authorized Service Dealer replace the rotor blades and scraper if necessary.

Before each session, inspect the rotor blades for wear. When a rotor blade edge has worn down to the wear indicator hole, have an Authorized Service Dealer replace the rotor blades and the scraper (Figure 27).

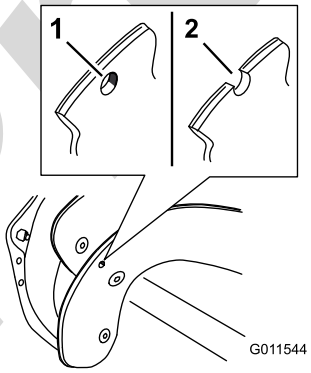

Figure 27

1. The wear indicator hole is intact; you do not need to replace the rotor blades.
2. The wear indicator hole is exposed; replace the rotor blades and scraper.
3. Scraper

Changing the Engine Oil

Service Interval: After the first 2 hours

Yearly

Run the engine a few minutes before changing the oil to warm it. Warm oil flows better and carries more contaminants.

1. Ensure that the fuel tank is not overfilled (refer to Figure 13) and that the fuel cap is securely in place.
2. Move the machine to a level surface.
3. Place an oil drain pan under the oil drain plug (Figure 12), remove the oil drain plug, and tip the machine backward (handle down) halfway to the ground to drain the used oil into the oil drain pan.

   Important: Do not tip the machine all the way back to the ground, or fuel may leak out of the machine.
4. After draining the used oil, return the machine to the operating position.
5. Install the oil drain plug and tighten it securely.
6. Clean around the oil fill cap (Figure 12).
7. Unscrew the oil fill cap and remove it.
8. **Slowly** pour oil into the oil fill hole. Wait 3 minutes, then check the oil level on the dipstick by wiping the dipstick clean and then inserting, **but not screwing in,** the oil fill cap into the hole.

   Note: To determine the proper oil level on the dipstick, refer to Figure 28.

Preliminary

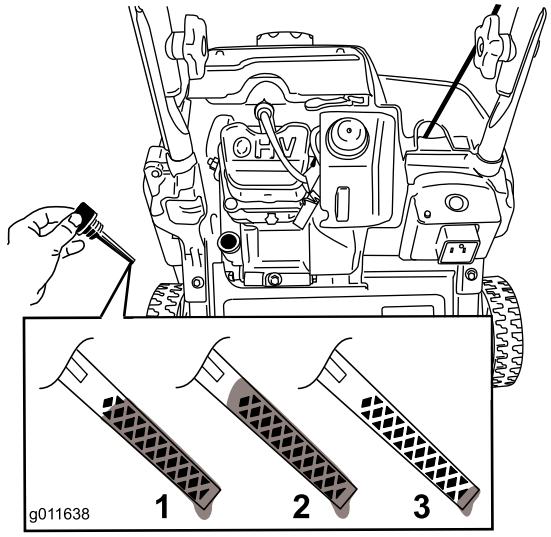

Figure 28

1. The oil level is at its maximum.
2. The oil level is too high—remove oil from the crankcase.
3. The oil level is too low—add oil to the crankcase.

Note: You may tip the machine forward (handle up) a little to make adding oil easier. Remember to return the machine to the operating position before checking the oil level.

Important: Do not tip the machine all the way forward onto its nose, or fuel may leak out of the machine.

Max fill: 12 oz. (0.35 l), type: automotive detergent oil with an API service classification of SJ, SL, or higher.

Use Figure 29 to select the best oil viscosity for the outdoor temperature range expected:

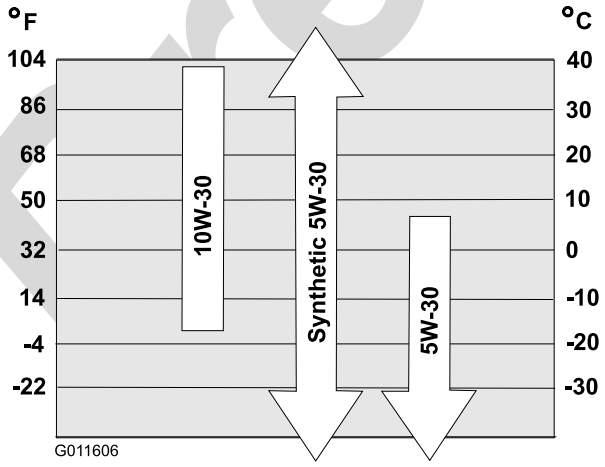

Figure 29

Note: Fill the engine crankcase with oil until the dipstick indicates that the engine oil level is correct as shown in Figure 29. If you overfill the engine with oil, remove the excess oil from the drain plug into an oil drain pan.

9. Screw the oil fill cap into the oil fill hole, and hand tighten it securely.
10. Wipe up any spilled oil.
11. Dispose of the used oil properly at a local recycling center.

Servicing the Spark Plug

Service Interval: Yearly—Service the spark plug and replace it if necessary.

Use a Toro spark plug (Part No. 119-1961).

1. Stop the engine and wait for all moving parts to stop.
2. Disconnect the wire from the spark plug (Figure 30).
3. Clean around the spark plug.
4. Remove the spark plug from the cylinder head.

Important: Replace a cracked, fouled, or dirty spark plug. Do not clean the electrodes because grit entering the cylinder can damage the engine.

5. Set the gap on the plug to 0.030 inch (0.76 mm) (Figure 30).

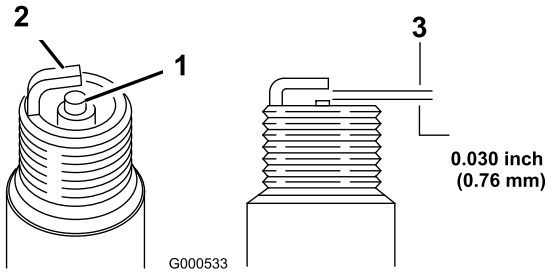

Figure 30

1. Center electrode insulator
2. Side electrode
3. Air gap (not to scale)

6. Install the spark plug and torque it to 20–22 ft-lb (27–30 N-m).
7. Connect the wire to the spark plug.

Preliminary

Storage

Storing the Machine

⚠ WARNING

- **Gasoline fumes are highly flammable, explosive, and dangerous if inhaled. If you store the machine in an area with an open flame, the gasoline fumes may ignite and cause an explosion.**
- **Do not store the machine in a house (living area), basement, or any other area where ignition sources may be present, such as hot water and space heaters, clothes dryers, furnaces, and other like appliances.**
- **Do not tip the machine either forward or backward with fuel in the fuel tank; otherwise, fuel may leak out of the machine.**
- **Do not store the machine with its handle tipped down onto the ground, because oil will leak into the engine cylinder and onto the ground, and the machine will not start or run.**

1. On the last refueling of the season, add fuel stabilizer to fresh fuel as directed by the engine manufacturer.
2. Run the engine for 10 minutes to distribute the conditioned fuel through the fuel system.
3. While the engine is still warm, change the engine oil. Refer to Changing the Engine Oil.
4. Drain the fuel from the tank and carburetor by performing the following steps:
   A. Unscrew, but do not remove, the small screw on the side of the carburetor fuel bowl (Figure 31) until the fuel begins to drain from the carburetor. Drain the fuel into an approved fuel container.

   Important: Do not remove the carburetor bowl bolt on the bottom of the carburetor.

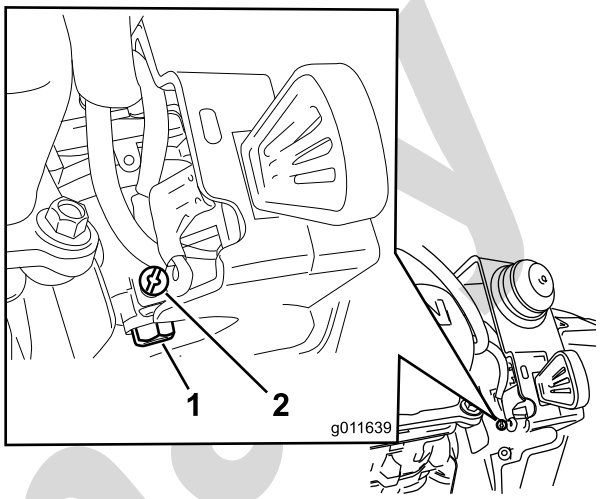

Figure 31

1. Carburetur bowl bolt—do not remove
2. Small screw on carburetor

   B. Wait for a few minutes until the fuel has drained, then install the fuel cap and tighten the small screw on the carburetor.

   Note: Use a handheld Phillips screwdriver. Overtightening can cause the small screw to strip.
5. Dispose of unused fuel properly. Recycle it according to local codes, or use it in your automobile.
6. Remove the spark plug.
7. Squirt 2 teaspoons of oil into the spark plug hole.
8. Install the spark plug by hand and then torque it to 20–22 ft-lb (27–30 N-m).
9. With the ignition key in the Off position, pull the recoil starter slowly to distribute the oil on the inside of the cylinder.
10. Disconnect the ignition key from the lanyard and store the ignition key in a safe place.
11. Clean the machine.
12. Touch up chipped surfaces with paint available from an Authorized Service Dealer. Sand affected areas before painting, and use a rust preventative to prevent the metal parts from rusting.
13. Tighten any loose fasteners. Repair or replace any damaged parts.
14. Cover the machine and store it in a clean, dry place out of the reach of children. Allow the engine to cool before storing it in any enclosure.

Preliminary

Notes:

Preliminary

International Distributor List

Distributor:	Country:	Phone Number:	Distributor:	Country:	Phone Number:
Atlantis Su ve Sulama Sisstemleri Lt	Turkey	90 216 344 86 74	Maquiver S.A.	Colombia	57 1 236 4079
Balama Prima Engineering Equip.	Hong Kong	852 2155 2163	Maruyama Mfg. Co. Inc.	Japan	81 3 3252 2285
B-Ray Corporation	Korea	82 32 551 2076	Agrolanc Kft	Hungary	36 27 539 640
Casco Sales Company	Puerto Rico	787 788 8383	Mountfield a.s.	Czech Republic	420 255 704 220
Ceres S.A.	Costa Rica	506 239 1138	Munditol S.A.	Argentina	54 11 4 821 9999
CSSC Turf Equipment (pvt) Ltd.	Sri Lanka	94 11 2746100	Oslinger Turf Equipment SA	Ecuador	593 4 239 6970
Cyril Johnston & Co.	Northern Ireland	44 2890 813 121	Oy Hako Ground and Garden Ab	Finland	358 987 00733
Equiver	Mexico	52 55 539 95444	Parkland Products Ltd.	New Zealand	64 3 34 93760
Femco S.A.	Guatemala	502 442 3277	Prato Verde S.p.A.	Italy	39 049 9128 128
G.Y.K. Company Ltd.	Japan	81 726 325 861	Prochaska & Cie	Austria	43 1 278 5100
Geomechaniki of Athens	Greece	30 10 935 0054	RT Cohen 2004 Ltd.	Israel	972 986 17979
Guandong Golden Star	China	86 20 876 51338	Riversa	Spain	34 9 52 83 7500
Hako Ground and Garden	Sweden	46 35 10 0000	Sc Svend Carlsen A/S	Denmark	45 66 109 200
Hako Ground and Garden	Norway	47 22 90 7760	Solvert S.A.S.	France	33 1 30 81 77 00
Hayter Limited (U.K.)	United Kingdom	44 1279 723 444	Spypros Stavrinides Limited	Cyprus	357 22 434131
Hydroturf Int. Co Dubai	United Arab Emirates	97 14 347 9479	Surge Systems India Limited	India	91 1 292299901
Hydroturf Egypt LLC	Egypt	202 519 4308	T-Markt Logistics Ltd.	Hungary	36 26 525 500
Irriamc	Portugal	351 21 238 8260	Toro Australia	Australia	61 3 9580 7355
Irrigation Products Int'l Pvt Ltd.	India	86 22 83960789	Toro Europe NV	Belgium	32 14 562 960
Jean Heybroek b.v.	Netherlands	31 30 639 4611			

European Privacy Notice

The Information Toro Collects
Toro Warranty Company (Toro) respects your privacy. In order to process your warranty claim and contact you in the event of a product recall, we ask you to share certain personal information with us, either directly or through your local Toro company or dealer.

The Toro warranty system is hosted on servers located within the United States where privacy law may not provide the same protection as applies in your country.

BY SHARING YOUR PERSONAL INFORMATION WITH US, YOU ARE CONSENTING TO THE PROCESSING OF YOUR PERSONAL INFORMATION AS DESCRIBED IN THIS PRIVACY NOTICE.

The Way Toro Uses Information
Toro may use your personal information to process warranty claims, to contact you in the event of a product recall and for any other purpose which we tell you about. Toro may share your information with Toro's affiliates, dealers or other business partners in connection with any of these activities. We will not sell your personal information to any other company. We reserve the right to disclose personal information in order to comply with applicable laws and with requests by the appropriate authorities, to operate our systems properly or for our own protection or that of other users.

Retention of your Personal Information
We will keep your personal information as long as we need it for the purposes for which it was originally collected or for other legitimate purposes (such as regulatory compliance), or as required by applicable law.

Toro's Commitment to Security of Your Personal Information
We take reasonable precautions in order to protect the security of your personal information. We also take steps to maintain the accuracy and current status of personal information.

Access and Correction of your Personal Information
If you would like to review or correct your personal information, please contact us by email at legal@toro.com.

Australian Consumer Law

Australian customers will find details relating to the Australian Consumer Law either inside the box or at your local Toro Dealer.

Preliminary

The Toro Warranty and The Toro GTS Starting Guarantee

Conditions and Products Covered

The Toro Company and its affiliate, Toro Warranty Company, pursuant to an agreement between them, jointly promise to repair for the original purchaser[1] the Toro Product listed below if defective in materials or workmanship or if the Toro GTS (Guaranteed to Start) engine will not start on the first or second pull, provided the routine maintenance required in the *Operator's Manual* have been performed.

The following time periods apply from the date of purchase:

Products	Warranty Period
Walk Power Mowers	
• Cast Deck	5 years Residential Use[2] 90 Days Commercial Use
• Engine	5 years GTS Guarantee, Residential Use[3]
• Battery	2 years
• Steel Deck	2 years Residential Use[2] 90 Days Commercial Use
• Engine	2 years GTS Guarantee, Residential Use[3]
TimeMaster Mowers	3 years Residential Use[2] 90 Days Commercial Use
• Engine	3 years GTS Guarantee, Residential Use[3]
• Battery	2 years
Electric Hand Held Products	2 years Residential Use[2] No Warranty for Commercial Use
Snowthrowers	
• Single Stage	2 years Residential Use[2] 45 Days Commercial Use
• Engine	2 years GTS Guarantee, Residential Use[3]
• Two Stage	3 years Residential Use[2] 45 Days Commercial Use
• Chute, chute deflector and impeller housing cover	Lifetime (original owner only)[5]
Electric Snowthrowers	2 years Residential Use[2] No Warranty for Commercial Use
All Ride-On Units Below	
• Engine	See engine manufacturer's warranty[4]
• Battery	2 years Residential Use[2]
• Attachments	2 years Residential Use[2]
DH Lawn & Garden Tractors	2 years Residential Use[2] 90 Days Commercial Use
XLS Lawn & Garden Tractors	3 years Residential Use[2] 90 Days Commercial Use
TimeCutter	3 years Residential Use[2] 90 Days Commercial Use
TITAN Mowers	3 years or 240 hours[5]
• Frame	Lifetime (original owner only)[6]
Z Master Mowers — 2000 Series	4 years or 500 hours[5]
• Frame	Lifetime (original owner only)[6]

[1]Original Purchaser means the person who originally purchased the Toro Product.

[2]Residential use means use of the product on the same lot as your home. Use at more than one location is considered commercial use and the commercial use warranty would apply.

[3]The Toro GTS Starting Guarantee does not apply when the product is used commercially.

[4]Some engines used on Toro Products are warranted by the engine manufacturer.

[5]Whichever occurs first.

[6]Lifetime Frame Warranty - If the main frame, consisting of the parts welded together to form the tractor structure that other components such as the engine are secured to, cracks or breaks in normal use, it will be repaired or replaced, at Toro's option, under warranty at no cost for parts and labor. Frame failure due to misuse or abuse and failure or repair required due to rust or corrosion are not covered.

This warranty covers the cost of parts and labor, but you must pay transportation costs.

Warranty may be denied if the hour meter is disconnected, altered, or shows signs of being tampered with.

Owner Responsibilities

You must maintain your Toro Product by following the maintenance procedures described in the *Operator's Manual*. Such routine maintenance, whether performed by a dealer or by you, is at your expense.

Instructions for Obtaining Warranty Service

If you think that your Toro Product contains a defect in materials or workmanship, follow this procedure:

1. Contact your seller to arrange service of the product. If for any reason it is impossible for you to contact your seller, you may contact any Toro Authorized Distributor to arrange service. See attached Distributor List.
2. Bring the product and your proof of purchase (sales receipt) to the servicing outlet. If for any reason you are dissatisfied with the servicing outlet's analysis or with the assistance provided, contact us at:

   Toro Customer Care Department, RLC Division
   Toro Warranty Company
   8111 Lyndale Avenue South
   Bloomington, MN 55420-1196
   001–952–948–4707

Items and Conditions Not Covered

This express warranty does not cover the following:

- Cost of regular maintenance service or wear parts, such as blades, rotor blades (paddles), scraper blades, belts, fuel, lubricants, oil changes, spark plugs, pneumatic tires, cable/linkage or brake adjustments
- Any product or part which has been altered or misused and requires replacement or repair due to accidents or lack of proper maintenance
- Repairs necessary due to failure to use fresh fuel (less than one month old), or failure to properly prepare the unit prior to any period of non-use over one month
- All repairs covered by these warranties must be performed by an authorized Toro servicing outlet using approved replacement parts.

General Conditions

The purchaser is covered by the national laws of each country. The rights to which the purchaser is entitled with the support of these laws are not restricted by this warranty.

Preliminary