Form No. 3369-561 Rev B

# Power Max Heavy Duty 926/928/1028 OXE Snowthrower

**Model No. 38820—Serial No. 313000001 and Up**

**Model No. 38822—Serial No. 313000001 and Up**

**Model No. 38824—Serial No. 313000001 and Up**

**Operator's Manual**

# Introduction

**This machine is intended to be used by residential homeowners or professional, hired operators. It is designed for removing snow from paved surfaces, such as driveways and sidewalks, and other surfaces for traffic on residential or commercial properties. It is not designed for removing materials other than snow.**

Read this information carefully to learn how to operate and maintain your machine properly and to avoid injury and machine damage. You are responsible for operating the machine properly and safely.

You may contact Toro directly at www.Toro.com for machine and accessory information, help finding a dealer, or to register your machine.

Whenever you need service, genuine Toro parts, or additional information, contact an Authorized Service Dealer or Toro Customer Service and have the model and serial numbers of your machine ready. Figure 1 identifies the location of the model and serial numbers on the machine. Write the numbers in the space provided.

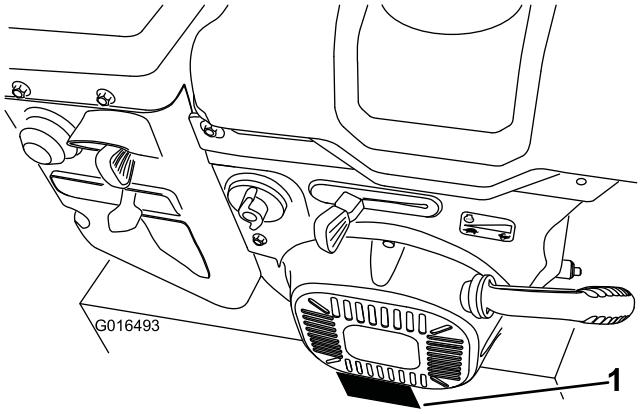


**Figure 1**

1. Model and serial number location

**Model No.** _____

**Serial No.** _____

This manual identifies potential hazards and has safety messages identified by the safety alert symbol (Figure 2), which signals a hazard that may cause serious injury or death if you do not follow the recommended precautions.



**Figure 2**

1. Safety alert symbol

This manual uses 2 words to highlight information. **Important** calls attention to special mechanical information and **Note** emphasizes general information worthy of special attention.

© 2012—The Toro® Company
8111 Lyndale Avenue South
Bloomington, MN 55420

Register at www.Toro.com.

Original Instructions (EN)
Printed in the USA
All Rights Reserved

*3369-561* B

This spark ignition system complies with Canadian ICES-002.

# Contents


Introduction ..... 1
Safety ..... 3
- Training ..... 3
- Preparation ..... 3
- Operation ..... 3
- Clearing a Clogged Discharge Chute ..... 4
- Maintenance and Storage ..... 4
- Toro Snowthrower Safety ..... 4
- Sound Pressure ..... 5
- Sound Power ..... 5
- Vibration ..... 5
- Safety and Instructional Decals ..... 5

Setup ..... 7
- 1 Installing the Upper Handle ..... 8
- 2 Installing the Wheel Clutch Cable Ends ..... 8
- 3 Installing the Traction Control Linkage ..... 9
- 4 Installing the Chute Control Rod ..... 10
- 5 Connecting the Wire to the Headlight ..... 11
- 6 Filling the Engine with Oil ..... 11
- 7 Checking the Tire Pressure ..... 12
- 8 Checking the Skids and Scraper ..... 12
- 9 Checking the Traction Drive Operation ..... 12

Product Overview ..... 14
Operation ..... 14
- Filling the Fuel Tank ..... 14
- Starting the Engine ..... 15
- Stopping the Engine ..... 17
- Operating the Traction Drive ..... 18
- Using the Wheel Clutch Levers ..... 18
- Operating the Speed Selector ..... 18
- Operating the Auger/Impeller Drive ..... 19
- Operating the Quick Stick® ..... 19
- Unclogging the Discharge Chute ..... 20
- Preventing Freeze-up ..... 20
- Operating Tips ..... 20

Maintenance ..... 21
- Recommended Maintenance Schedule(s) ..... 21
- Preparing for Maintenance ..... 21
- Checking the Engine Oil Level ..... 21
- Checking and Adjusting the Skids ..... 21
- Checking and Adjusting the Traction Cable ..... 22
- Checking the Auger Gearbox Oil Level ..... 22
- Changing the Engine Oil ..... 23
- Replacing the Spark Plug ..... 24
- Adjusting the Discharge Chute Latch ..... 24
- Replacing the Drive Belts ..... 25
- Replacing the Headlight Bulb ..... 25

Storage ..... 26
- Preparing the Machine for Storage ..... 26
- Removing the Machine from Storage ..... 26

Troubleshooting ..... 27

# Safety

**This machine meets or exceeds the ISO 8437 specifications of the International Standards Organization in effect at the time of production.**

**Read and understand the contents of this manual before the engine is ever started.**

**⚠This is the safety alert symbol. It is used to alert you to potential personal injury hazards. Obey all safety messages that follow this symbol to avoid possible injury or death.**

**Improperly using or maintaining this machine could result in injury or death. To reduce this potential, comply with the following safety instructions.**

## Training

- Read, understand and follow all instructions on the machine and in the manual(s) before operating this machine. Be thoroughly familiar with the controls and the proper use of the machine. Know how to stop the machine and disengage the controls quickly.
- Never allow children to operate the machine. Never allow adults to operate the machine without proper instruction.
- Keep the area of operation clear of all persons, particularly small children.
- Exercise caution to avoid slipping or falling, especially when operating the machine in reverse.

## Preparation

- Thoroughly inspect the area where the machine is to be used and remove all doormats, sleds, boards, wires, and other foreign objects.
- Disengage all clutches and shift into neutral before starting the engine.
- Do not operate the machine without wearing adequate winter garments. Avoid loose fitting clothing that can get caught in moving parts. Wear footwear that will improve footing on slippery surfaces.
- Handle fuel with care; it is highly flammable.
  - Use an approved fuel container.
  - Never add fuel to a running engine or hot engine.
  - Fill fuel tank outdoors with extreme care. Never fill fuel tank indoors.
  - Never fill containers inside a vehicle or on a truck or trailer bed with a plastic liner. Always place containers on the ground, away from your vehicle, before filling.
  - When practical, remove gas-powered machinery from the truck or trailer and refuel it on the ground. If this is not possible, then refuel such machinery on a trailer with a portable container, rather than from a gasoline dispenser nozzle.
  - Keep the nozzle in contact with the rim of the fuel tank or container opening at all times, until refueling is complete. Do not use a nozzle lock-open device.
  - Replace gasoline cap securely and wipe up spilled fuel.
  - If fuel is spilled on clothing, change clothing immediately.
- Use extension cords and receptacles as specified by the manufacturer for all machines with electric starting motors.
- Adjust the collector housing to clear gravel or crushed rock surface.
- Never attempt to make any adjustments while the engine is running (except when specifically recommended by manufacturer).
- Always wear safety glasses or eye shields during operation or while performing an adjustment or repair to protect eyes from foreign objects that may be thrown from the machine.

## Operation

- Do not put hands or feet near or under rotating parts. Keep clear of the discharge opening at all times.
- Exercise extreme caution when operating on or crossing gravel drives, walks, or roads. Stay alert for hidden hazards or traffic.
- After striking a foreign object, stop the engine, remove the ignition key, thoroughly inspect the machine for any damage, and repair the damage before restarting and operating the machine.
- If the machine should start to vibrate abnormally, stop the engine and check immediately for the cause. Vibration is generally a warning of trouble.
- Stop the engine whenever you leave the operating position, before unclogging the auger/impeller housing or discharge chute, and when making any repairs, adjustments or inspections.
- When cleaning, repairing or inspecting the machine, stop the engine and make certain the auger/impeller and all moving parts have stopped. Disconnect the spark plug wire and keep the wire away from the plug to prevent someone from accidentally starting the engine.
- Do not run the engine indoors, except when starting the engine and for transporting the machine in or out of the building. Open the outside doors; exhaust fumes are dangerous.
- Exercise extreme caution when operating on slopes.
- Never operate the machine without proper guards, and other safety protective devices in place and working.
- Never direct the discharge toward people or areas where property damage can occur. Keep children and others away.

- Do not overload the machine capacity by attempting to clear snow at too fast a rate.
- Never operate the machine at high transport speeds on slippery surfaces. Look behind and use care when operating in reverse.
- Disengage power to the auger/impeller when machine is transported or not in use.
- Use only attachments and accessories approved by the manufacturer of the machine (such as wheel weights, counterweights, or cabs).
- Never operate the machine without good visibility or light. Always be sure of your footing, and keep a firm hold on the handles. Walk; never run.
- Never touch a hot engine or muffler.

# Clearing a Clogged Discharge Chute

**⚠ WARNING**

**Hand contact with the rotating rotor blades inside the discharge chute is the most common cause of injury associated with machines. Never use your hand to clean out the discharge chute.**

To clear the chute:

- **Shut the engine off!**
- Wait 10 seconds to be sure the rotor blades have stopped rotating.
- Always use the cleanout tool mounted on the snowthrower, not your hands.

# Maintenance and Storage

- Check all fasteners at frequent intervals for proper tightness to be sure the machine is in safe working condition.
- Never store the machine with fuel in the fuel tank inside a building where ignition sources are present such as hot water heaters, space heaters, or clothes dryers. Allow the engine to cool before storing in any enclosure.
- Always refer to the *Operator's Manual* for important details if the machine is to be stored for an extended period.
- Maintain or replace safety and instruction labels, as necessary.

# Toro Snowthrower Safety

The following list contains safety information specific to Toro machines or other safety information that you must know.

- **Rotating auger/impeller can cut off or injure fingers or hands.** Stay behind the handles and away from the discharge opening while operating the machine. **Keep your face, hands, feet, and any other part of your body or clothing away from moving or rotating parts.**
- Before adjusting, cleaning, inspecting, troubleshooting, or repairing the machine, **stop the engine, remove the key, and wait for all moving parts to stop. Disconnect the wire from the spark plug and keep it away from the spark plug to prevent someone from accidentally starting the engine.**
- **Before** leaving the operating position, stop the engine, remove the key, and wait for all moving parts to stop.
- To unclog the discharge chute, stay in the operating position and release the left hand (traction) lever. While running the auger/impeller, push down on the handles to raise the front of the machine a few inches (centimeters) off the pavement. Then lift the handles quickly to bump the front of the machine on the pavement. Repeat if necessary until a stream of snow comes out the discharge chute.
- If you cannot unclog the discharge chute by bumping the front of the machine, **stop the engine, wait for all moving parts to stop, and use the cleanout tool; never use your hand.**
- If a shield, safety device, or decal is damaged, illegible, or lost, repair or replace it before beginning operation.
- **Do not** smoke while handling gasoline.
- **Do not** use the machine on a roof.
- Do not touch the engine while it is running or soon after it has stopped because the engine may be hot enough to cause a burn.

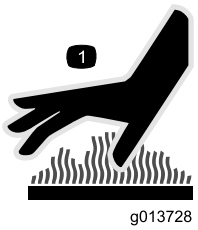


**Figure 3**

1. Symbol stamped on the muffler heat shield

- Perform only those maintenance instructions described in this manual. Before performing any maintenance, service, or adjustment, stop the engine, remove the key, and disconnect the wire from the spark plug. If major repairs are ever needed, contact your Authorized Service Dealer.
- Do not change the governor settings on the engine.
- When storing the machine for more than 30 days, drain the fuel from the fuel tank to prevent a potential hazard. Store fuel in an approved fuel container. Remove the key from the ignition switch before storing the machine.
- Purchase only genuine Toro replacement parts and accessories.

# Sound Pressure

This machine has a sound pressure level at the operator's left ear of 87.5 dBA (models 38820 and 38822) and 87.3 dBA (model 38824), and a sound pressure level at the operator's right ear of 86.6 dBA (models 38820 and 38822) and 85.7 dBA (model 38824). The sound pressure level was determined according to the procedures outlined in EN ISO 11201.

# Sound Power

This machine has a guaranteed sound power level of 103 dBA (models 38820 and 38822) and 105 dBA (model 38824). The sound power level was determined according to the procedures outlined in EN ISO 3744.

# Vibration

Measured vibration level for the left hand = 3.8 $m/s^2$ (models 38820 and 38822) and 4.7 $m/s^2$ (model 38824).

Measured vibration level for the right hand = 4.8 $m/s^2$ (models 38820 and 38822) and 5.6 $m/s^2$ (model 38824).

The measured values were determined according to the procedures outlined in EN ISO 20643.

# Safety and Instructional Decals

**Important: Safety and instruction decals are located near areas of potential danger. Replace damaged decals.**

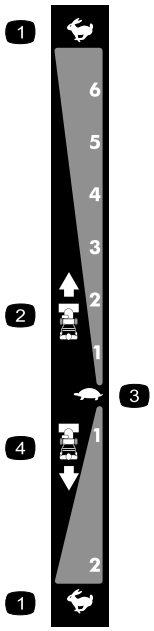


**106-4525**

Reorder part no. 112-6633

1. Fast
2. Forward speeds
3. Slow
4. Reverse speeds




**107-3040**

1. Cutting dismemberment, impeller and cutting dismemberment, auger hazards—keep bystanders a safe distance from the snowthrower.

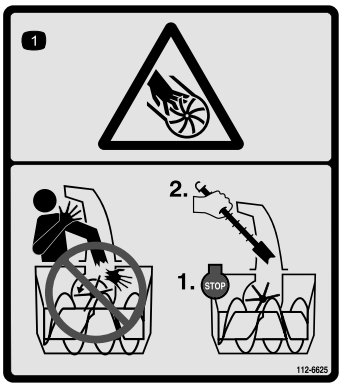


**112-6625**

Reorder part no. 112-6629

1. Cutting/dismemberment hazard, impeller—do not place your hand in the chute; stop the engine before leaving the operator's position, use the tool to clear the chute.




**112-6627**

1. Left turn control
2. Traction drive—squeeze the lever to engage; release the lever to disengage.
3. Warning—read the *Operator's Manual.*
4. Cutting/dismemberment hazard, impeller—do not place your hand in the chute; stop the engine before leaving the operator's position, use the tool to clear the chute.
5. Cutting/dismemberment hazard, impeller—keep away from moving parts; remove the ignition key and read the instructions before servicing or performing maintenance.
6. Thrown object hazard—keep bystanders a safe distance from the snowthrower.
7. Auger/impeller drive—squeeze the lever to engage; release the lever to disengage.
8. Right turn control

---

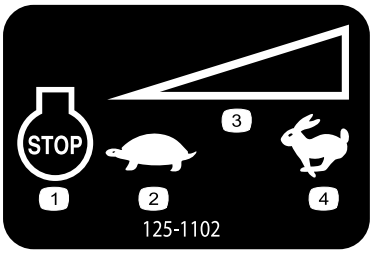


**125–1102**

1. Engine stop
2. Slow
3. Variable speed control
4. Fast

---

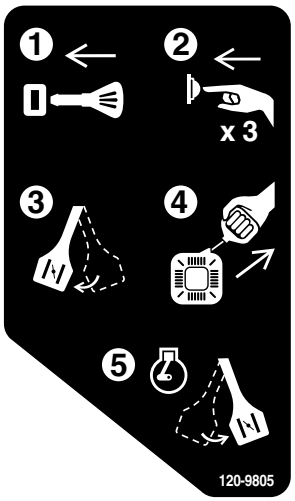


**120-9805**

1. Insert the key.
2. Prime the engine 3 times.
3. Engage the choke.
4. Pull the starter cord.
5. Once the engine is running, disengage the choke.

---

# Setup

## Loose Parts

Use the chart below to verify that all parts have been shipped.

| Procedure | Description | Qty. | Use |
|---|---|---|---|
| **1** | Handle bolts<br>Curved washers<br>Locknuts | 4<br>4<br>4 | Install the upper handle. |
| **2** | No parts required | – | Install the wheel clutch cable ends |
| **3** | No parts required | – | Install the traction control linkage. |
| **4** | Carriage bolts<br>Locknuts | 2<br>2 | Install the chute control rod. |
| **5** | Cable tie | 1 | Connect the wire to the headlight. |
| **6** | No parts required | – | Fill the engine with oil. |
| **7** | No parts required | – | Check the tire pressure. |
| **8** | No parts required | – | Check the skids and scraper. |
| **9** | No parts required | – | Check the operation of the traction drive. |

# 1

# Installing the Upper Handle

## Parts needed for this procedure:

| | |
|---|---|
| 4 | Handle bolts |
| 4 | Curved washers |
| 4 | Locknuts |

## Procedure

**Note:** Do not remove the rubber band on the cables until you have installed the upper handle.

1. Lift and rotate the upper handle and position it over the lower handle (Figure 4).

   **Important: Route the cables attached to the Quick Stick inside the upper handle legs and ensure that the cables and the wire for the headlight are not pinched between the handle sections.**

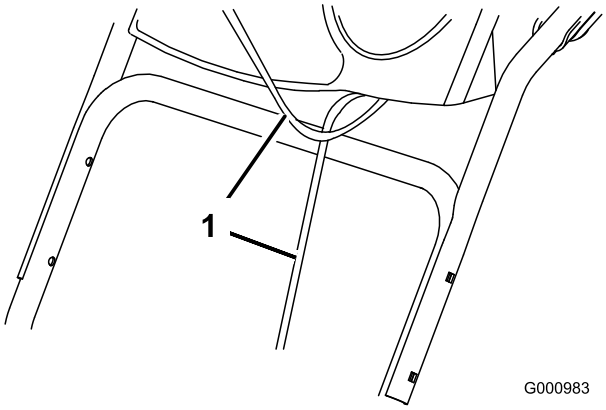


**Figure 4**

1. Cables

2. Secure the upper handle with 4 handle bolts, 4 curved washers, and 4 locknuts from the loose parts bag (Figure 5).

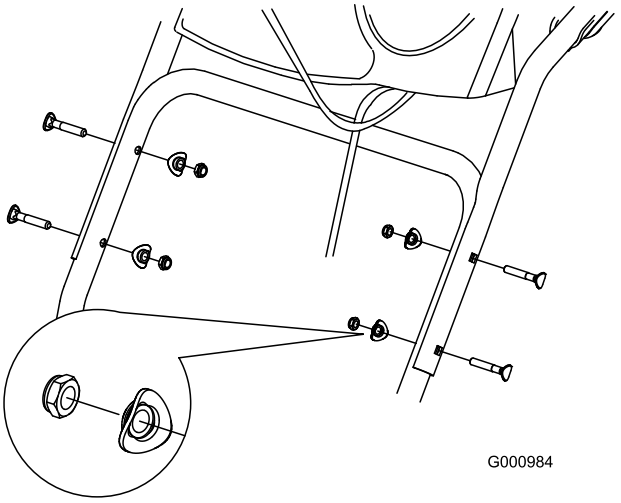


**Figure 5**

# 2

# Installing the Wheel Clutch Cable Ends

## No Parts Required

## Procedure

1. Unwrap the cable ends from the lower handle (Figure 6).

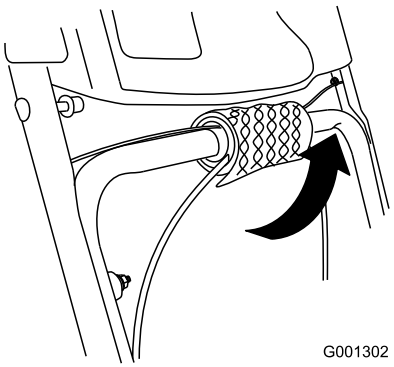


**Figure 6**

2. Route either the left or right cable end over the lower handle and insert the cable end into the hole in the corresponding wheel clutch lever (Figure 7).

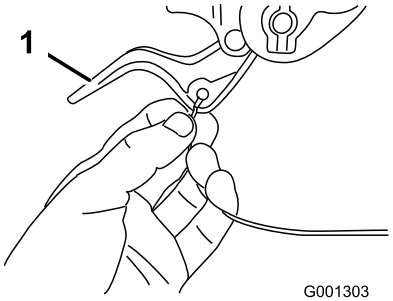


**Figure 7**

1. Wheel clutch lever

3. Remove the nut and washer from the handle, attach the cable clamp on the cable to the handle, install the washer and the nut, and hand tighten the nut (Figure 8).

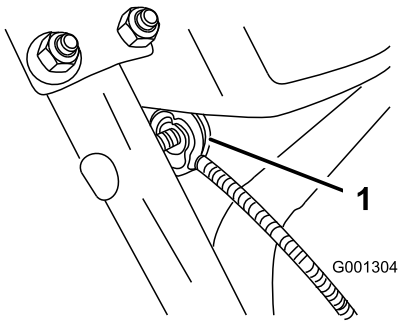


**Figure 8**

1. Cable clamp (2)

**Important: Ensure that the curved side of the cable clamp is against the handle and that the cable is routed below the clamp bolt. The cable must be in a straight line from the cable clamp to the point where it attaches to the wheel clutch lever.**

4. Pull the cable jacket down gently until the wheel clutch lever is down and the slack is out of the cable, then tighten the cable clamp nut securely (Figure 9).

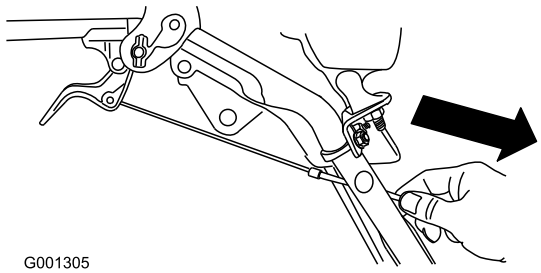


**Figure 9**

5. Squeeze the lever fully, then check the gap between the bottom of the handle and the wheel clutch lever end (Figure 10).

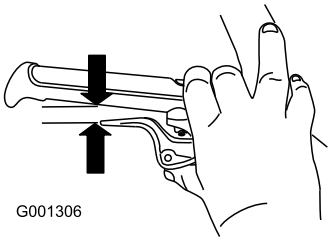


**Figure 10**

**Note:** The gap should be approximately the thickness of a pencil (1/4 inch or 6 mm). If it is greater, loosen the cable clamp nut, slide the cable jacket up slightly, tighten the cable clamp nut, and check the gap again.

6. Repeat steps 2 through 5 for the other cable.

# 3

# Installing the Traction Control Linkage

## No Parts Required

## Procedure

1. Remove the hairpin cotter and washer from the lower end of the speed control rod and insert the lower end of the rod into the lower link arm so that the bent end of the speed control rod faces rearward (Figure 11).

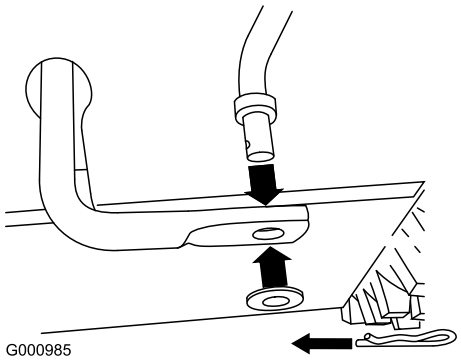


**Figure 11**

2. Secure the lower end of the speed control rod with the washer and hairpin cotter that you previously removed.
3. Remove the hairpin cotter and the outer washer from the trunnion on the upper end of the speed control rod (Figure 12).

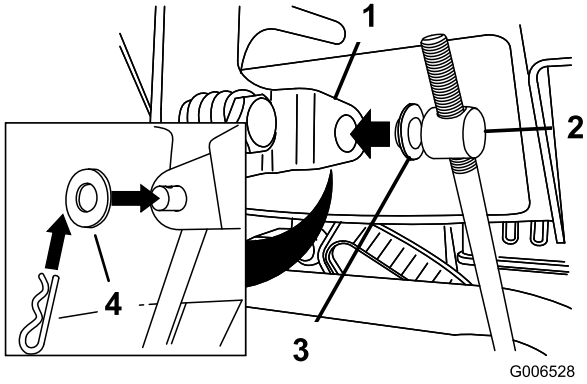


**Figure 12**

1. Speed selector lever
2. Trunnion
3. Inner washer
4. Outer washer

**Note:** To make installation easier, leave the flat washer on the trunnion (Figure 12).

4. Shift the speed selector lever into Position R2.
5. Rotate the lower link arm fully upward (counterclockwise) (Figure 13).

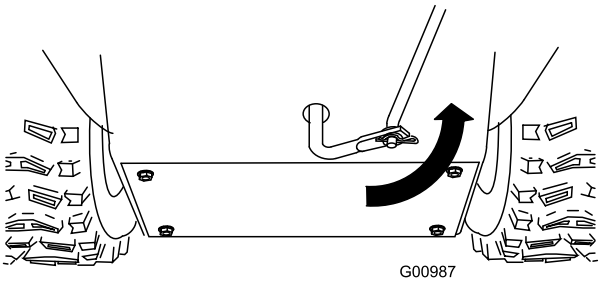


**Figure 13**

6. Lift up on the speed control rod and insert the trunnion into the hole in the speed selector lever (Figure 12).

   **Note:** If the trunnion does not fit into the hole when you lift up on the speed control rod, rotate the trunnion upward or downward on the speed control rod until it fits.

7. Secure the trunnion and upper end of the speed control rod with the outer washer and a hairpin cotter you previously removed.

**Note:** For easier installation, look down through the opening in the speed selector (Figure 14).

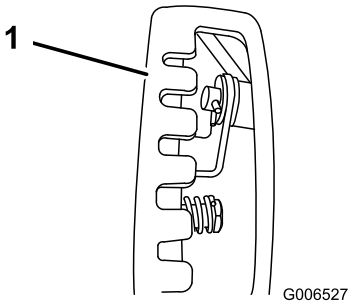


**Figure 14**

1. Speed selector

# 4

# Installing the Chute Control Rod

## Parts needed for this procedure:

| | |
|---|---|
| 2 | Carriage bolts |
| 2 | Locknuts |

## Procedure

1. Unwrap the Quick Stick and rotate it so that it is upright and in the center.
2. Hold the blue trigger cap down and pull the lever fully rearward.

   **Note:** The discharge chute and deflector should face forward. If they do not, hold the blue trigger cap down (but do not move the Quick Stick) and rotate the discharge chute until they do.

3. Align the flattened back end of the long chute control rod with the flattened front end of the short rod that extends from the control panel so that they nest together (Figure 15).

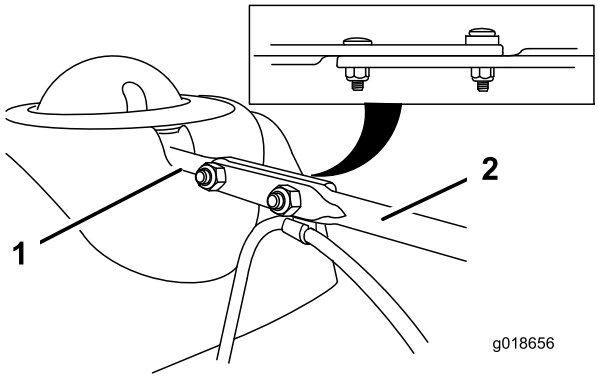


**Figure 15**

1. Short rod
2. Long chute control rod

4. Insert the front end of the rod into the opening in the back of the chute gear cover until it slides into the chute gear (Figure 16).

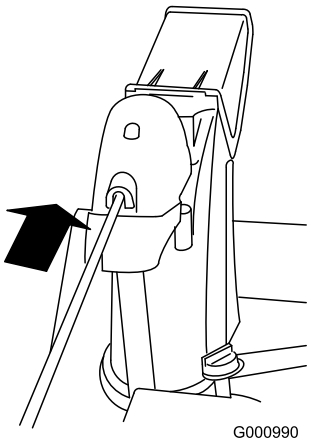


**Figure 16**

5. Align the holes in the nested ends of the rods and insert 2 carriage bolts (in the loose parts bag) through the short rod from the left side of the machine (from the operating position).
6. Insert the cable clip that supports the deflector cable under the head of the forward carriage bolt, and secure the carriage bolts with locknuts from the loose parts bag (Figure 17).

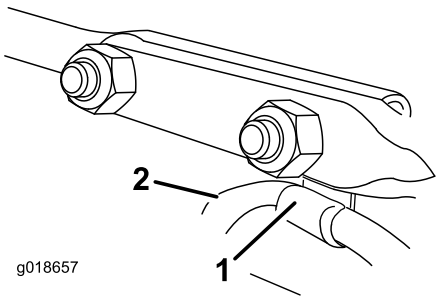


**Figure 17**

1. Cable clip
2. Deflector cable

7. Hold the blue trigger cap down and rotate the Quick Stick in a circle to ensure that the chute and deflector operate smoothly.

# 5

# Connecting the Wire to the Headlight

## Parts needed for this procedure:

| | |
|---|---|
| 1 | Cable tie |

## Procedure

1. Insert the wire connector on the loose end of the wire straight into the back of the headlight until it is securely in place (Figure 18).

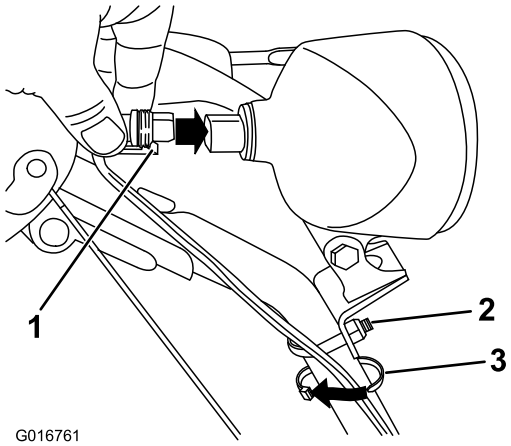


**Figure 18**

1. Plastic clip on wire connector
2. U-bolt
3. Cable tie

**Note:** Ensure that the plastic clip on the wire connector is on the bottom (Figure 18).

2. Secure a cable tie (from the loose parts bag) around the wire and the handle about an inch (2.5 cm) below the U-bolt (Figure 18).

# 6

# Filling the Engine with Oil

## No Parts Required

## Procedure

Your machine comes with oil in the engine crankcase.

**Note: Before starting the engine, check the oil level and add oil if necessary.**

Use automotive detergent oil with an API service classification of SF, SG, SH, SJ, SL, or higher. Refer to your engine owner's manual.

Use Figure 19 below to select the best oil viscosity for the outdoor temperature range expected:

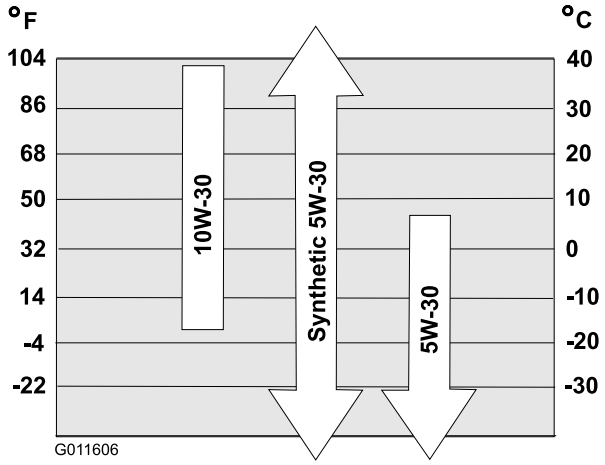


**Figure 19**

### Engine Oil Capacities

| Model | Engine Oil Capacity |
|---|---|
| 38820 | 30 to 32 oz. (0.89 to 0.95 l) |
| 38822 | |
| 38824 | |

1. Remove the dipstick by rotating the cap counterclockwise and **slowly** pour oil into the oil fill tube to raise the oil level to the Full mark on the dipstick. **Do not overfill.** (Figure 20).

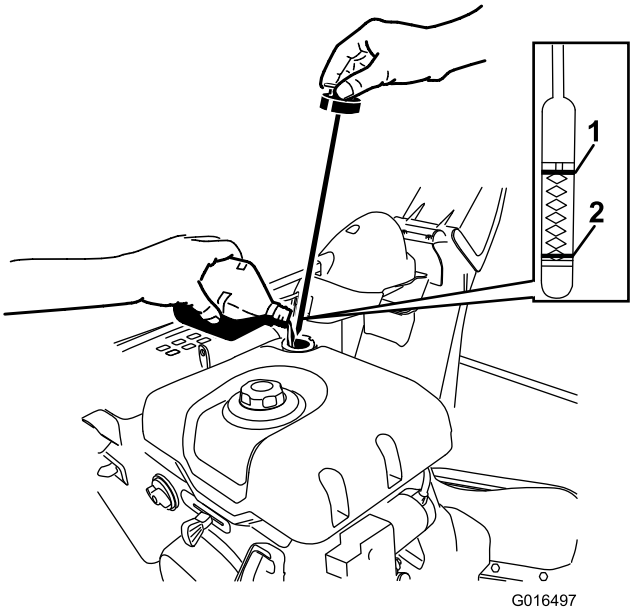


**Figure 20**

1. Full
2. Add oil

2. Install the dipstick securely by pushing the cap down flat and turning.

   **Note:** Do not spill oil around the oil fill tube; oil could leak onto traction parts and cause the traction to slip.

# 7

# Checking the Tire Pressure

## No Parts Required

## Procedure

The tires are overinflated at the factory for shipping. Reduce the pressure equally in both tires to between 17 and 20 psi (116 and 137 kPa).

# 8

# Checking the Skids and Scraper

## No Parts Required

## Procedure

Refer to Checking and Adjusting the Skids and Scraper in Maintenance.

# 9

# Checking the Traction Drive Operation

## No Parts Required

## Procedure

**⚠ CAUTION**

**If the traction drive is not properly adjusted, the machine may move in the direction opposite of what you intended, causing injury and/or property damage.**

**Carefully check the traction drive and adjust it properly, if necessary.**

1. Start the engine; refer to Starting the Engine.
2. Move the speed selector to Position R1; refer to Operating the Speed Selector.
3. Squeeze the left hand (traction) lever to the hand-grip (Figure 21).

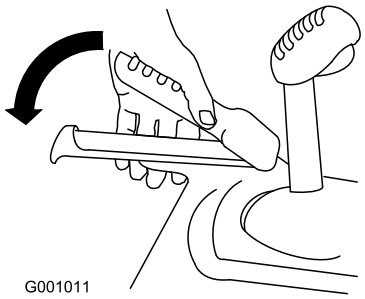


**Figure 21**

The machine should move rearward. If the machine does not move or moves forward, complete the following:

A. Release the traction lever and stop the engine.

B. Disconnect the trunnion from the speed selector lever (Figure 12).

C. Turn the trunnion downward (clockwise) on the speed control rod (Figure 12).

D. Connect the trunnion to the speed selector lever (Figure 12).

4. Release the traction lever.
5. Move the speed selector to the Position F1; refer to Operating the Speed Selector.
6. Squeeze the left hand (traction) lever to the hand-grip (Figure 21).

   The machine should move forward. If the machine does not move or moves rearward, complete the following:

   A. Release the traction lever and stop the engine.

   B. Disconnect the trunnion from the speed selector lever (Figure 12).

   C. Turn the trunnion upward (counterclockwise) on the speed control rod (Figure 12).

   D. Connect the trunnion to the speed selector lever (Figure 12).

7. If you made any adjustments, repeat this procedure until no adjustments are required.

**Important: If the machine moves when the traction lever is in the released position, check the traction cable (refer to Checking and Adjusting the Traction Cable) or take the machine to an Authorized Service Dealer for service.**

# Product Overview

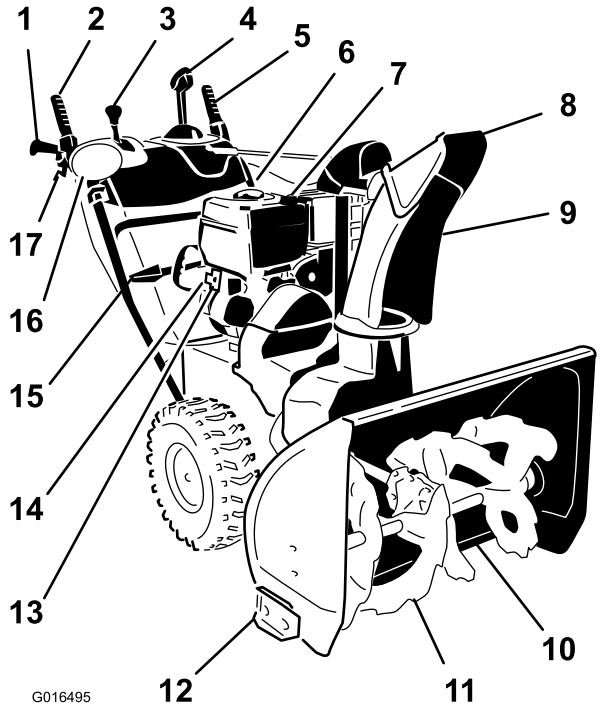


**Figure 22**

1. Hand-grip (2)
2. Auger/impeller lever
3. Speed selector lever
4. Quick Stick® discharge chute control
5. Traction lever
6. Fuel tank cap
7. Engine oil fill tube/dipstick
8. Chute deflector
9. Discharge chute
10. Scraper
11. Auger
12. Skid (2)
13. Electric starter button
14. Electric starter plug-in
15. Snow cleanout tool
16. Headlight
17. Wheel clutch lever (2)

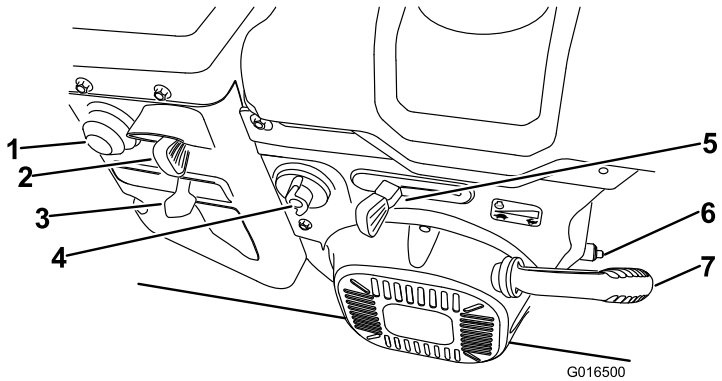


**Figure 23**

1. Primer
2. Ignition switch
3. Choke
4. Fuel shutoff valve
5. Throttle
6. Oil drain plug
7. Recoil starter

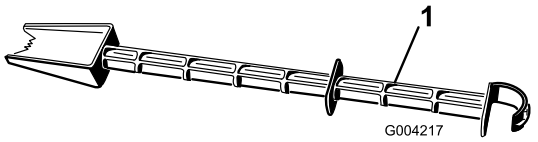


**Figure 24**

1. Snow cleanout tool (attached to the handle)

# Operation

**Note:** Determine the left and right sides of the machine from the normal operating position.

## Filling the Fuel Tank

**⚠ DANGER**

**Gasoline is extremely flammable and explosive. A fire or explosion from gasoline can burn you and others.**

- **To prevent a static charge from igniting the gasoline, place the container and/or machine on the ground before filling, not in a vehicle or on an object.**
- **Fill the tank outdoors when the engine is cold. Wipe up spills.**
- **Do not handle gasoline when smoking or around an open flame or sparks.**
- **Store gasoline in an approved fuel container, out of the reach of children.**

- For best results, use only clean, fresh, unleaded gasoline with an octane rating of 87 or higher ((R+M)/2 rating method).
- Oxygenated fuel with up to 10% ethanol or 15% MTBE by volume is acceptable.
- **Do Not** use ethanol blends of gasoline (such as E15 or E85) with more than 10% ethanol by volume. Performance problems and/or engine damage may result which may not be covered under warranty.
- **Do Not** use gasoline containing methanol.
- **Do Not** store fuel either in the fuel tank or fuel containers over the winter unless a fuel stabilizer is used.
- **Do Not** add oil to gasoline.

**Important: To reduce starting problems, add fuel stabilizer to the fuel all season, mixing it with gasoline less than 30 days old. *Do not add oil to the gasoline.***

**Note:** Do not fill above the bottom of the tank neck.

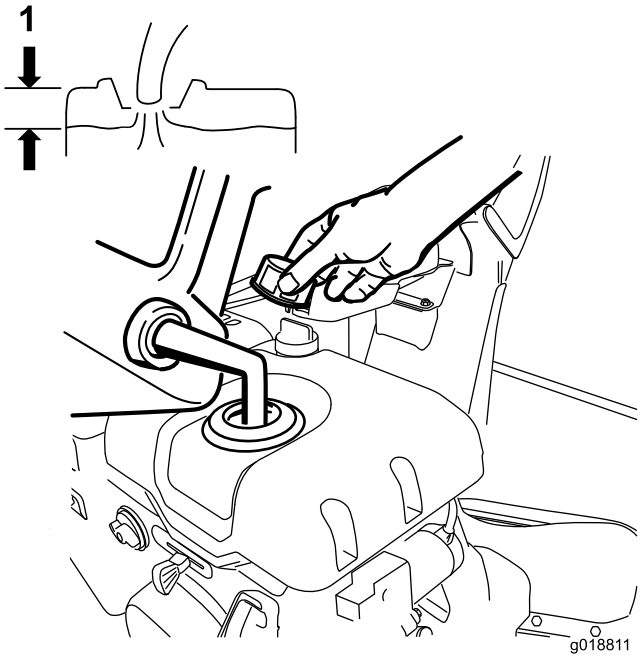


**Figure 25**

1. Do not fill above the bottom of the tank neck

# Starting the Engine

1. Check the engine oil level. Refer to Checking the Engine Oil Level in Maintenance.
2. Turn the fuel shutoff valve 1/4 turn counterclockwise to open it (Figure 26).

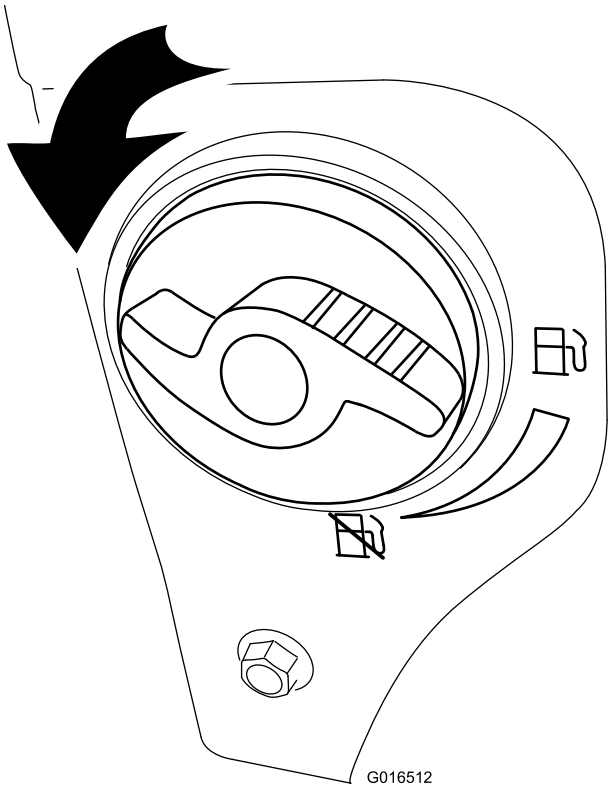


**Figure 26**

3. Insert the ignition key all the way in (Figure 27).

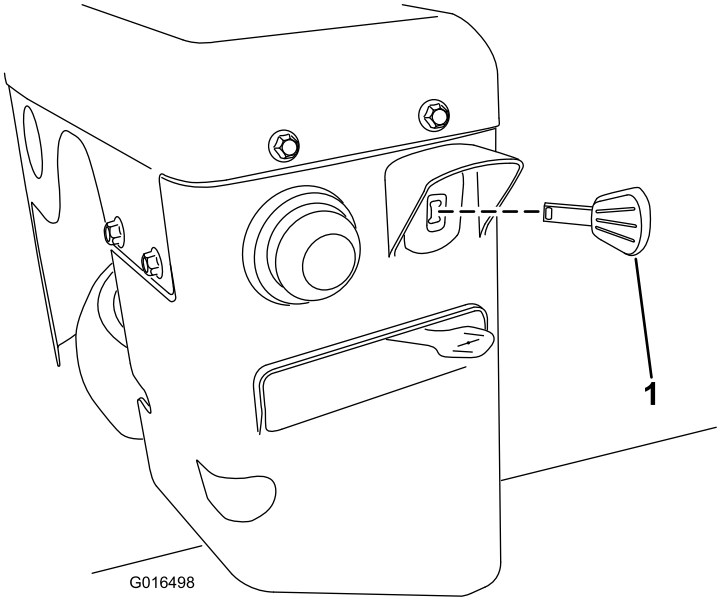


**Figure 27**

1. Ignition key

4. Firmly push in the primer with your thumb as indicated by the chart below, holding the primer in for a second before releasing it each time (Figure 28).

| Number of primes | Temperature |
|---|---|
| 3 | 0°F ( -18°C) or above |
| 4 | -10°F to 0°F (-23°C to -18°C) |
| 6 | -10°F (-23°C) and below |

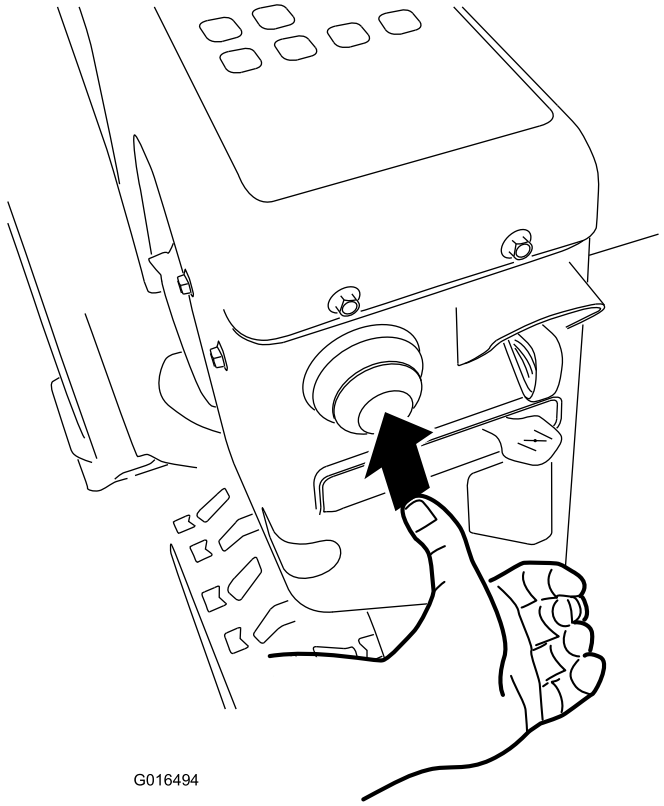


**Figure 28**

5. Move the choke to the Choke position (Figure 29).

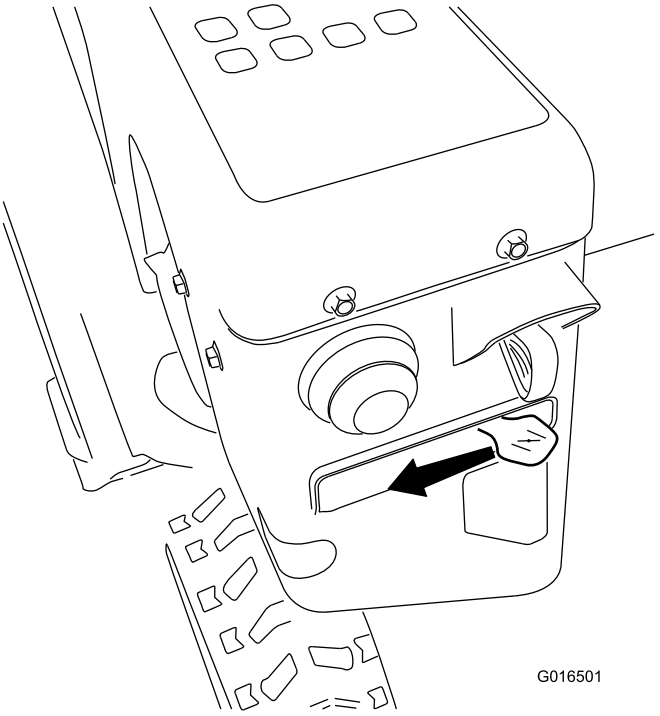


**Figure 29**

6. Move the throttle to the Fast position (Figure 30).

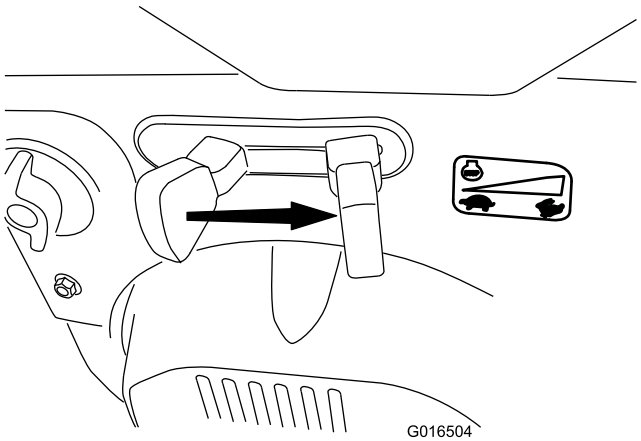


**Figure 30**

7. Start the machine by pulling the recoil starter or pressing the electric-starter button (Figure 31).

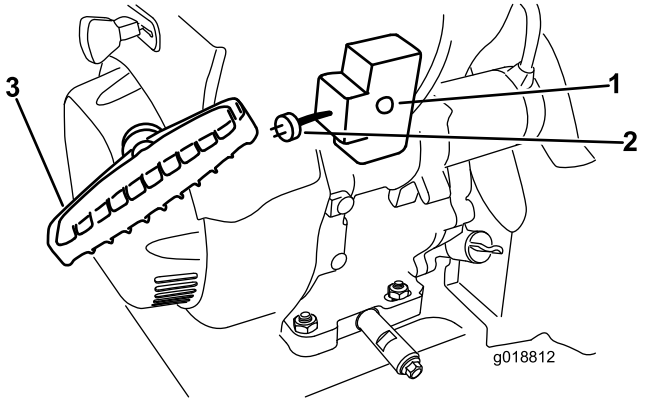


**Figure 31**

1. Electric-starter button
2. Electric starter plug-in
3. Recoil starter

**Note:** To use the electric starter, connect a power cord to the electric starter plug-in first and then to a power outlet. Use only a UL-listed, 16-gauge extension cord recommended for outdoor use that is not longer than 50 feet (15 m).

**⚠ WARNING**

**The electrical cord can become damaged, causing a shock or fire.**

**Thoroughly inspect the electrical cord before using the machine. If the cord is damaged, do not operate the machine. Replace or repair the damaged cord immediately. Contact an Authorized Service Dealer for assistance.**

**Important: To prevent damaging the electric starter, run it in short cycles (5 seconds on, 5 seconds off), no more than 10 times. If the engine still does not start, take the machine to an Authorized Service Dealer for service.**

8. Disconnect the power cord from the power outlet first and then from the machine (electric start only).
9. Allow the engine to warm up; gradually move the choke toward the Run position. Wait for the engine to run smoothly before each choke adjustment.

**⚠ CAUTION**

**If you leave the machine plugged into a power outlet, someone can inadvertently start the machine and injure people or damage property.**

**Unplug the power cord whenever you are not starting the machine.**

# Stopping the Engine

1. Move the throttle to the Slow position, and then to the Stop position (Figure 32) to kill the engine. The engine can also be stopped by pulling the ignition key outward to the middle position.

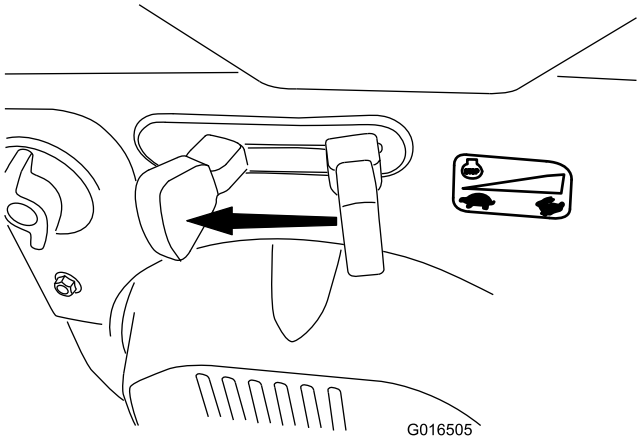


**Figure 32**

2. Wait for all moving parts to stop before leaving the operating position.
3. Remove the ignition key to prevent accidental starting.
4. Close the fuel shutoff valve by rotating it clockwise (Figure 33).

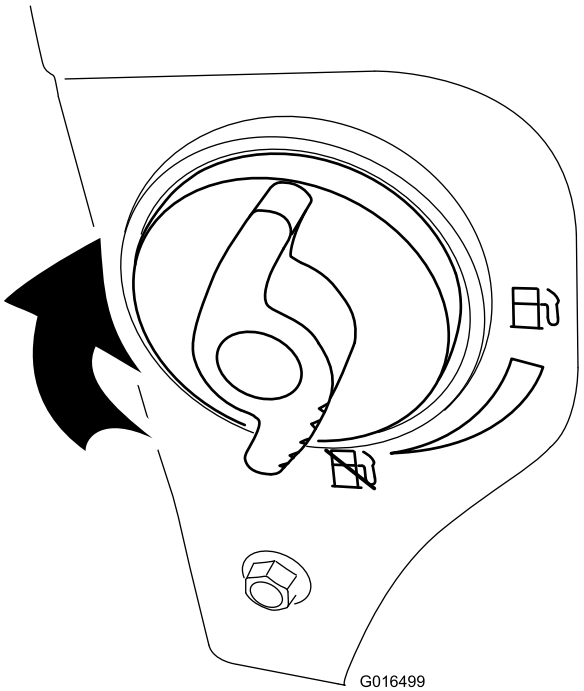


**Figure 33**

5. Pull the recoil starter 3 or 4 times. This helps prevent the recoil starter from freezing up.

# Operating the Traction Drive

**⚠ CAUTION**

**If the traction drive is not properly adjusted, the machine may move in the direction opposite of what you intended, causing injury and/or property damage.**

**Carefully check the traction drive and adjust it properly, if necessary; refer to Checking the Traction Drive Operation in Setup for more information.**

**Important: If the machine moves when the traction lever is in the released position, check the traction cable (refer to Checking and Adjusting the Traction Cable) or take the machine to an Authorized Service Dealer for service.**

**Important: To operate the traction drive, you must operate the machine with the self-propel feature engaged. Refer to Freewheeling or Using the Self-propel Drive.**

1. To engage the traction drive, squeeze the left hand (traction) lever to the handgrip (Figure 34).

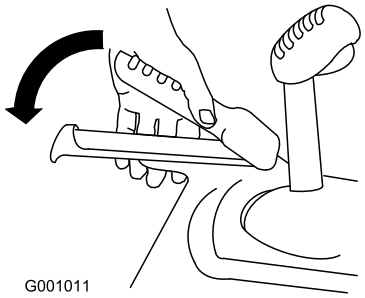


**Figure 34**

2. To stop the traction drive, release the traction lever.

# Using the Wheel Clutch Levers

The wheel clutch levers allow you to momentarily disengage the drive to one or both wheels with the traction drive lever still engaged. This enables you to turn and maneuver the machine easily.

**Note:** Holding down the traction lever against the handle engages the traction drive to both wheels.

To turn the machine to the right, lift up on the right wheel clutch lever and squeeze it toward the handle (Figure 35).

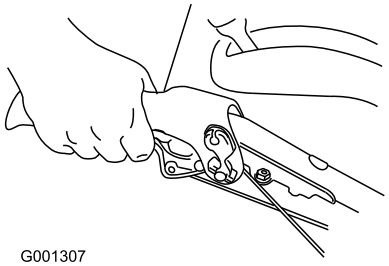


**Figure 35**

**Note:** This disengages the drive to the right wheel while the left wheel continues driving, and the machine turns to the right.

**Note:** Similarly, squeezing the left wheel clutch lever turns the machine to the left.

When you complete the turn, release the wheel clutch lever, and the drive re-engages both wheels (Figure 36).

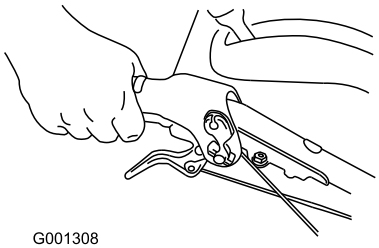


**Figure 36**

Momentarily squeezing and releasing the left or right wheel clutch lever also allows for steering adjustments to keep the machine going in a straight line, especially in deep snow.

Squeezing both wheel clutch levers simultaneously disengages the drive to both wheels. This enables you to manually move the machine backward without stopping to shift it into a reverse gear. It also allows you to maneuver and transport the machine more easily when the engine is not running.

# Operating the Speed Selector

The speed selector has 6 forward and 2 reverse gears. To change speeds, release the traction lever and shift the speed selector lever to the desired position (Figure 37). The lever locks in a notch at each speed selection.

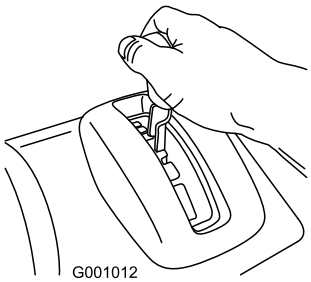


**Figure 37**

# Operating the Auger/Impeller Drive

1. To engage the auger/ impeller drive, squeeze the right hand (auger/ impeller) lever to the handgrip (Figure 38).

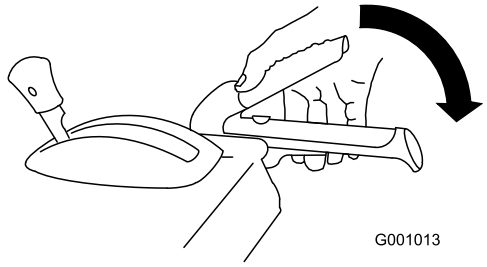


**Figure 38**

2. To stop the auger and impeller, release the right hand lever.

   **Important: When you engage both the auger/impeller lever and the traction lever, the traction lever locks the auger/impeller lever down, freeing your right hand. To release both levers, simply release the left hand (traction) lever.**

3. If the auger and impeller continue to rotate when you release the auger/impeller lever, do not operate the machine. Check the auger/impeller cable (refer to Checking and Adjusting the Auger/Impeller Cable) and adjust it if necessary. Otherwise, take the machine to an Authorized Dealer for service.

**⚠ WARNING**

**If the auger and impeller continue to rotate when you release the auger/impeller lever, you could seriously injure yourself or others.**

**Do not operate the machine. Take it to an Authorized Service Dealer for service.**

# Operating the Quick Stick®

Hold the blue trigger cap down to use the Quick Stick to move the discharge chute and the chute deflector. Release the trigger cap to lock the discharge chute and chute deflector into position (Figure 39).

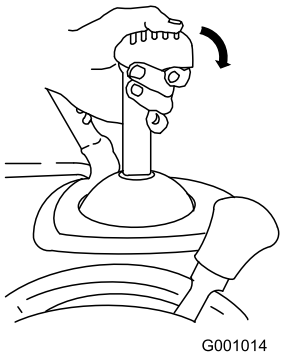


**Figure 39**

## Moving the Discharge Chute

Hold the blue trigger cap down and move the Quick Stick to the left to move the discharge chute to the left; move the Quick Stick to the right to move the discharge chute to the right (Figure 40).

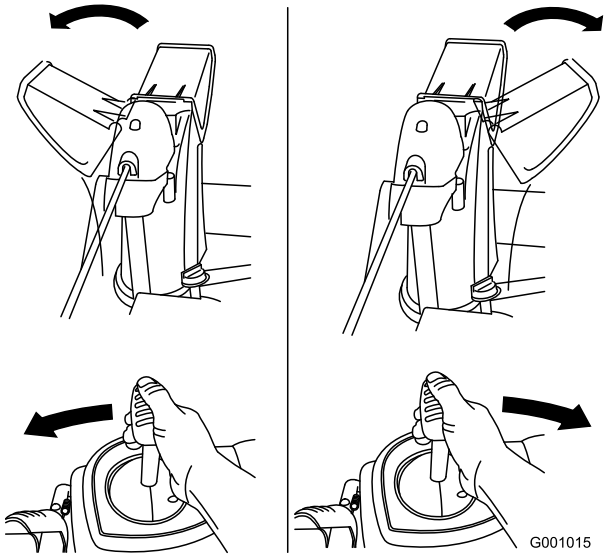


**Figure 40**

- If the chute does not move, refer to Adjusting the Discharge Chute Latch.
- If the chute does not turn as far to the left as it does to the right, ensure that the cable is routed to the inside of the handles. Refer to Installing the Upper Handle.
- If the chute does not lock into place when you release the trigger cap, refer to Adjusting the Discharge Chute Latch.

## Moving the Chute Deflector

Hold the blue trigger cap down and move the Quick Stick forward to lower the chute deflector; move it rearward to raise the chute deflector (Figure 41).




**Figure 41**

# Unclogging the Discharge Chute

**⚠ WARNING**

**If the auger/impeller is running but there is no snow coming out of the discharge chute, the discharge chute may be clogged.**

**Never use your hands to clear a clogged discharge chute. This could result in personal injury.**

- To unclog the discharge chute, stay in the operating position and release the left hand (traction) lever. While running the auger/impeller, push down on the handles to raise the front of the machine a few inches (centimeters) off the pavement. Then lift the handles quickly to bump the front of the machine on the pavement. Repeat if necessary until a stream of snow comes out the discharge chute.
- If you cannot unclog the discharge chute by bumping the front of the machine, **stop the engine, wait for all moving parts to stop, and use the snow cleanout tool; never use your hand.**

  **Important: Unclogging the discharge chute by bumping the front of the machine on the pavement may cause the skids to move. Adjust the skids and tighten the skid bolts securely.**

# Preventing Freeze-up

- In snowy and cold conditions, some controls and moving parts may freeze. **Do not use excessive force when trying to operate frozen controls.** If you have difficulty operating any control or part, start the engine and let it run for a few minutes.
- After using the machine, let the engine run for a few minutes to prevent moving parts from freezing. Engage the auger/impeller to clear any remaining snow from inside the housing. Rotate the Quick Stick to prevent it from freezing. Stop the engine, wait for all moving parts to stop, and remove all ice and snow from the machine.
- With the engine off, pull the recoil starter handle several times and push the electric-starter button once to prevent the recoil starter and electric starter from freezing up.

# Operating Tips

**⚠ DANGER**

**When the machine is in operation, the impeller and auger can rotate and cut off or injure hands and feet.**

- **Before adjusting, cleaning, inspecting, troubleshooting, or repairing the machine, stop the engine and wait for all moving parts to stop. Disconnect the wire from the spark plug and keep it away from the plug to prevent someone from accidentally starting the engine.**
- **Remove an obstruction from the discharge chute; refer to Unclogging the Discharge Chute. If necessary, use the snow cleanout tool, not your hands, to remove an obstruction from the discharge chute.**
- **Stay behind the handles and away from the discharge opening while operating the machine.**
- **Keep face, hands, feet, and any other part of your body or clothing away from concealed, moving, or rotating parts.**

**⚠ WARNING**

**The impeller can throw stones, toys, and other foreign objects and cause serious personal injury to the operator or to bystanders.**

- **Keep the area to be cleared free of all objects that the augers could pick up and throw.**
- **Keep all children and pets away from the area of operation.**
- Always set the throttle to the Fast position when throwing snow.
- If the engine slows down under a load or the wheels slip, shift the machine into a lower gear.
- If the front of the machine rides up, shift the machine into a lower gear. If the front continues to ride up, lift up on the handles.

# Maintenance

**Note:** Determine the left and right sides of the machine from the normal operating position.

## Recommended Maintenance Schedule(s)

| Maintenance Service Interval | Maintenance Procedure |
|---|---|
| After the first 2 hours | • Inspect the traction cable and adjust it if necessary. |
| After the first 5 hours | • Change the engine oil. |
| Before each use or daily | • Check the engine oil level and add oil if necessary. |
| Every 50 hours | • Change the engine oil. Change the engine oil every 25 operating hours when operating the engine under a heavy load. |
| Every 100 hours | • Replace the spark plug. |
| Yearly | • Check the skids and adjust them if necessary.<br>• Inspect the traction cable and adjust or replace it if necessary.<br>• Check the auger gearbox oil and add oil if necessary. |
| Yearly or before storage | • Check the air pressure in the tires and inflate them to 17–20 psi (116–137 kPa).<br>• Run the engine to dry out the fuel tank and the carburetor at the end of the season.<br>• Have an Authorized Service Dealer inspect and replace the traction drive belt and/or the auger/impeller drive belt, if necessary. |

**Important:** **You can find more information about maintaining and servicing your machine at www.Toro.com.**

## Preparing for Maintenance

1. Move the machine to a level surface.
2. Stop the engine and wait for all moving parts to stop.
3. Disconnect the spark plug wire. Refer to Replacing the Spark Plug.

## Checking the Engine Oil Level

**Service Interval:** Before each use or daily—Check the engine oil level and add oil if necessary.

1. Remove the dipstick, wipe it clean, then fully install the dipstick.
2. Remove the dipstick and check the oil level (Figure 42). If the oil level is below the Add mark on the dipstick, add oil. Refer to Filling the Engine with Oil.

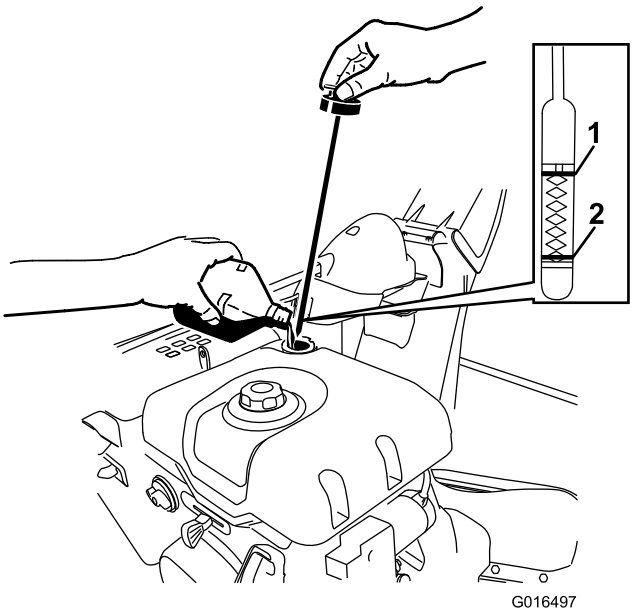


**Figure 42**

1. Full
2. Add oil

## Checking and Adjusting the Skids

**Service Interval:** Yearly—Check the skids and adjust them if necessary.

Check the skids to ensure that the auger does not contact the paved or gravel surface. Adjust the skids as needed to compensate for wear.

1. Check the tire pressure. Refer to Checking the Tire Pressure.
2. Loosen the nuts that secure both skids to the auger sides until the skids slide up and down easily (Figure 43).

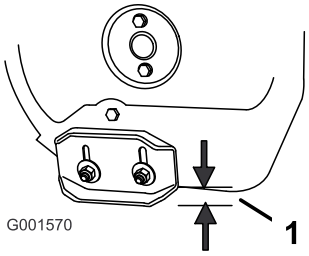


**Figure 43**

1. 1/2 inch (1.3 cm)

3. Support the side plates so that they are **at least** 1/2 inch (1.3 cm) above a level surface.

   **Important: The auger blades must be supported above the ground by the skids.**

4. Ensure that the scraper is 1/8 inch (3 mm) above and parallel to a level surface.

   **Note:** If the pavement is cracked, rough, or uneven, adjust the skids to raise the scraper. For gravel surfaces, adjust the skids further down to prevent the machine from picking up rocks.

5. Move the skids down until they are even with the ground.
6. Firmly tighten the nuts that secure both skids to the auger sides.

   **Note:** To quickly adjust the skids if they loosen, support the scraper 1/8 inch (3 mm) off the pavement, then adjust the skids down to the pavement.

   **Note:** If the skids become excessively worn, you can turn them over and set the unused side toward the pavement.

# Checking and Adjusting the Traction Cable

**Service Interval:** After the first 2 hours—Inspect the traction cable and adjust it if necessary.

Yearly—Inspect the traction cable and adjust or replace it if necessary.

If the machine does not drive in the forward or reverse speeds or it drives when you release the traction lever, adjust the traction cable.

With the traction lever disengaged, check the pin in the elongated slot in the left side of the machine above the tire. There should be a gap of 1/32 to 1/16 inch (1 to 1.5 mm) from the front of the slot to the front edge of the pin (Figure 44).

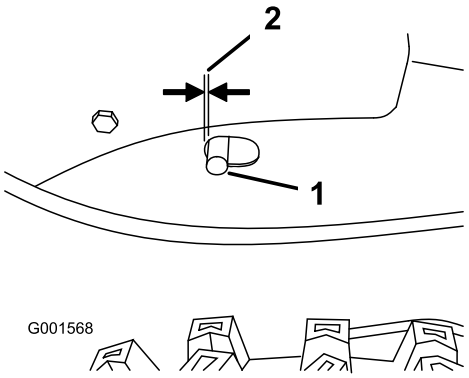


**Figure 44**

1. Pin
2. 1/32 to 1/16 inch (1 to 1.5 mm)

If the left hand (traction) cable is not properly adjusted, do the following steps:

1. Loosen the jam nut.
2. Loosen or tighten the turnbuckle to adjust the pin until it is the proper gap from the front edge of the slot.
3. Tighten the jam nut (Figure 45).

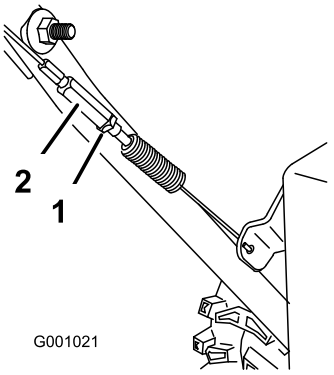


**Figure 45**

1. Jam nut
2. Turnbuckle

# Checking the Auger Gearbox Oil Level

**Service Interval:** Yearly—Check the auger gearbox oil and add oil if necessary.

1. Move the machine to a level surface.
2. Clean the area around the pipe plug (Figure 46).

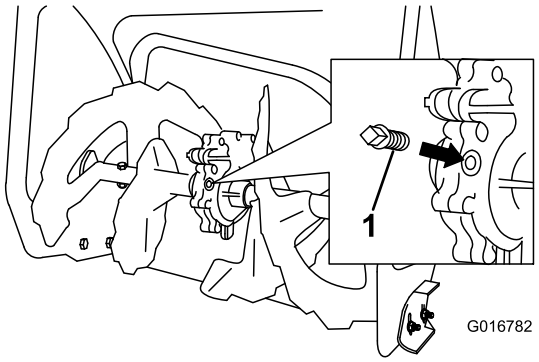


**Figure 46**

1. Pipe plug

3. Remove the pipe plug from the gearbox.
4. Check the oil level in the gearbox. The oil should be at the point of overflowing at the filler opening.
5. If the oil level is low, add GL-5 or GL-6, SAE 85-95 EP gear oil lubricant to the gearbox until the point of overflow.

   **Note:** Do not use synthetic oil.
6. Install the pipe plug in the gearbox.

# Changing the Engine Oil

**Service Interval:** After the first 5 hours—Change the engine oil.

Every 50 hours—Change the engine oil. Change the engine oil every 25 operating hours when operating the engine under a heavy load.

If possible, run the engine just before changing the oil because warm oil flows better and carries more contaminants.

Use automotive detergent oil with an API service classification of SF, SG, SH, SJ, SL, or higher. Refer to your engine owner's manual.

Use Figure 47 below to select the best oil viscosity for the outdoor temperature range expected:

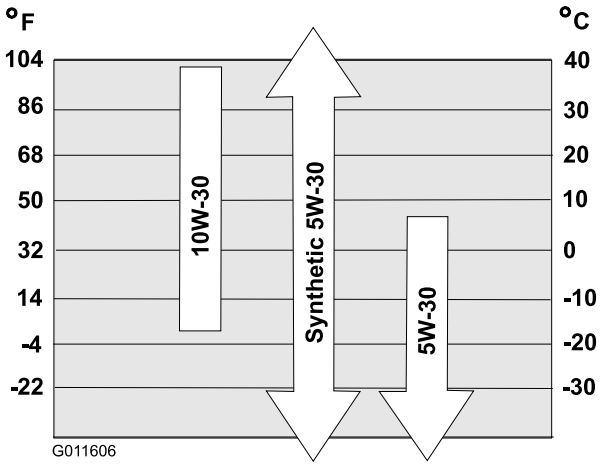


**Figure 47**

## Engine Oil Capacities

| Model | Engine Oil Capacity |
|---|---|
| 38820 | 30 to 32 oz. (0.89 to 0.95 l) |
| 38822 | |
| 38824 | |

1. Clean the area around the oil drain cap (Figure 48).

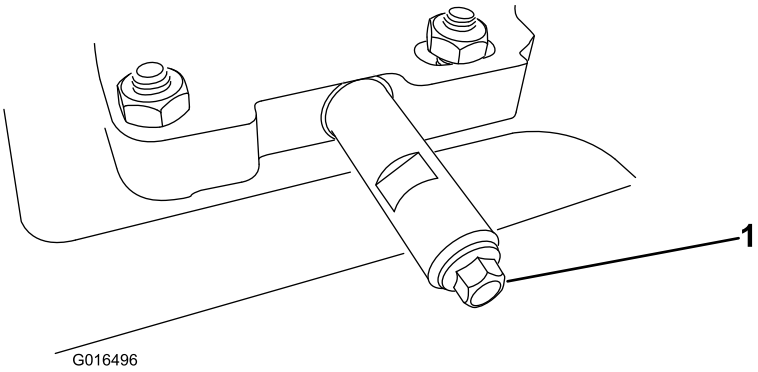


**Figure 48**

1. Oil drain plug

2. Slide an oil drain pan under the drain extension and remove the oil drain plug.

   **Note:** When removing the plug, ensure the tube does not loosen.

3. Drain the oil.

   **Note:** Dispose of the used oil properly at a local recycling center.

4. Install the oil drain plug.
5. Fill the crankcase with oil. Refer to Filling the Engine Crankcase with Oil.

# Replacing the Spark Plug

**Service Interval:** Every 100 hours—Replace the spark plug.

**⚠ WARNING**

**Replacing the spark plug while the engine is hot can result in burns.**

**Wait until the engine is cool to replace the spark plug.**

Use a Toro spark plug or equivalent (Champion® RN9YC or NGK BPR6ES).

1. Remove the boot (Figure 49).

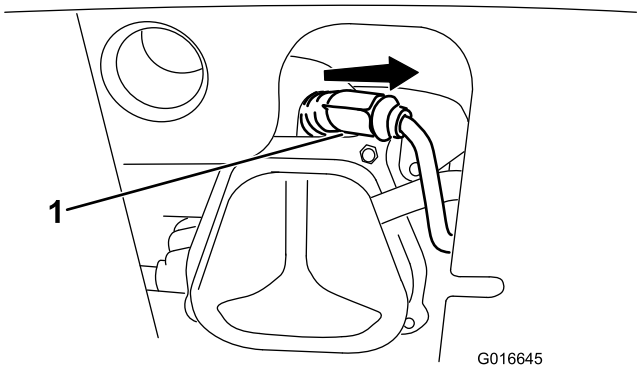


**Figure 49**

1. Spark plug boot

2. Clean around the base of the spark plug.

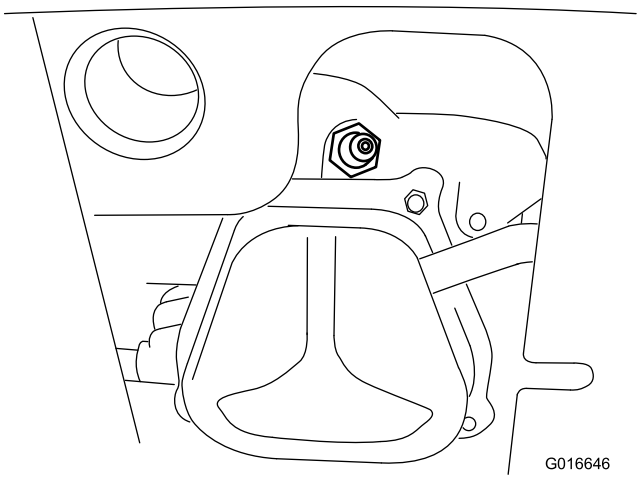


**Figure 50**

3. Remove and discard the old spark plug.

   **Note:** You will need a ratchet wrench extension to remove the spark plug.

4. Set the gap between the electrodes on a new spark plug at 0.030 inch (0.76 mm) (Figure 51).

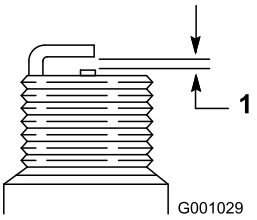


**Figure 51**

1. 0.030 inch (0.76 mm)

5. Install the new spark plug, tighten it firmly, and attach the ignition wire to the spark plug.

   **Note:** Ensure the ignition wire snaps completely into place on the spark plug.

# Adjusting the Discharge Chute Latch

If the discharge chute does not lock into the desired position or does not unlock so that you can move it to another position, adjust the discharge chute latch.

1. Remove the fastener on the gear cover (Figure 52), lift the front of the cover up, and slide it back and out of the way.

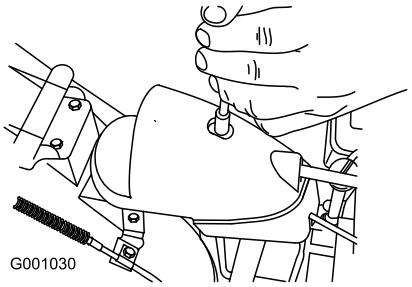


**Figure 52**

2. Loosen the bolt on the cable clamp (Figure 53).

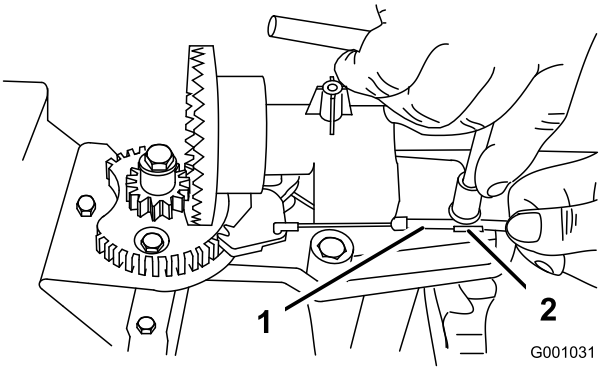


**Figure 53**

1. Cable conduit 2. Cable clamp

3. Grasp the cable conduit and move it toward the front of the machine until the discharge chute latch fully engages the gear teeth (Figure 53 and Figure 54).

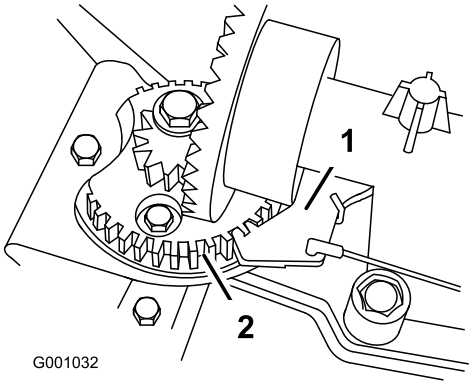


**Figure 54**

1. Discharge chute latch 2. Gear teeth

**Note:** The latch is spring loaded and will naturally move into the teeth of the gear (Figure 54).

4. Remove any slack in the cable by pulling the cable conduit rearward.
5. Tighten the bolt on the cable clamp, being careful not to strip the plastic part.
6. Install and secure the gear cover.

# Replacing the Drive Belts

If the auger/impeller drive belt or the traction drive belt becomes worn, oil-soaked, or otherwise damaged, have an Authorized Service Dealer replace the belt.

# Replacing the Headlight Bulb

Use a **GE 899 37W halogen light bulb.** Do not touch the bulb with your hands or allow dirt or moisture to come into contact with the bulb.

1. Remove the wire connector from the back of the headlight (Figure 55).

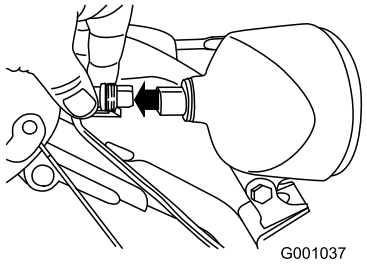


**Figure 55**

2. Turn the base of the bulb counterclockwise until it stops (Figure 56).

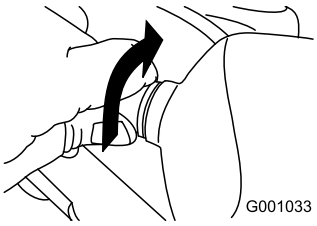


**Figure 56**

3. Remove the bulb straight out from the back of the headlight (Figure 57).

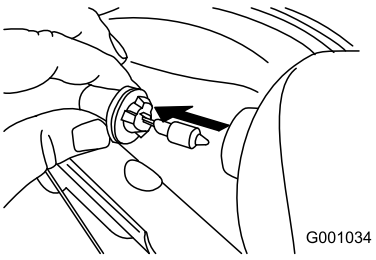


**Figure 57**

4. Insert a new bulb into the back of the headlight (Figure 58).

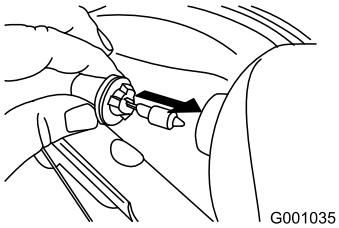


**Figure 58**

5. Turn the base of the bulb clockwise until it is snug (Figure 59).

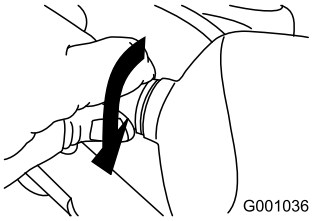


**Figure 59**

6. Insert the wire connector straight into the back of the headlight until it is securely in place (Figure 60).

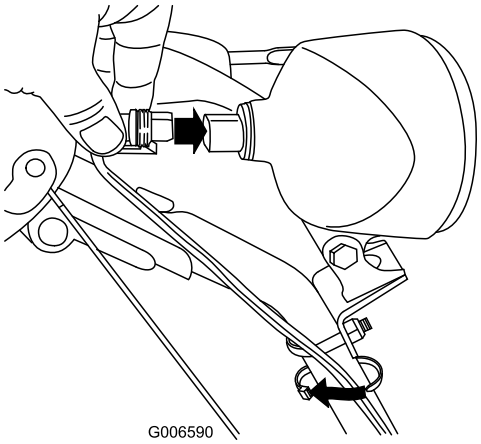


**Figure 60**

# Storage

**⚠ WARNING**

- **Gasoline vapors can explode.**
- **Do not store gasoline more than 30 days.**
- **Do not store the machine in an enclosure near an open flame.**
- **Allow the engine to cool before storing it.**

## Preparing the Machine for Storage

1. On the last refueling of the year, add fuel stabilizer to fresh fuel.

   **Note:** Fuel should not be stored longer than suggested by the fuel stabilizer manufacturer.

2. Run the engine for 10 minutes to distribute the conditioned fuel through the fuel system.
3. Run the machine until the engine runs out of fuel.
4. Prime the engine and start it again.
5. Allow the engine to run until it stops. When you can no longer start the engine, it is sufficiently dry.
6. Stop the engine and allow it to cool.
7. Remove the ignition key.
8. Clean the machine thoroughly.
9. Touch up chipped surfaces with paint available from an Authorized Service Dealer. Sand affected areas before painting, and use a rust preventative to prevent the metal parts from rusting.
10. Tighten all loose screws, bolts, and locknuts. Repair or replace any damaged parts.
11. Cover the machine and store it in a clean, dry place out of the reach of children.

## Removing the Machine from Storage

Perform the annual maintenance procedures as given in the Recommended Maintenance Schedule.

# Troubleshooting

| Problem | Possible Cause | Corrective Action |
|---|---|---|
| Electric starter does not turn (electric-start models only) | 1. The power cord is disconnected at the outlet or the machine.<br>2. The power cord is worn, corroded, or damaged.<br>3. The power outlet is not energized. | 1. Connect the power cord to the outlet and/or the machine.<br>2. Replace the power cord.<br>3. Have a qualified electrician energize the outlet. |
| Engine does not start or starts hard | 1. The key is not in the ignition or is in the Stop position.<br>2. The choke is in the Off position and the primer has not been pressed.<br>3. The fuel shutoff valve is not open.<br>4. The throttle is not in the Fast position.<br>5. The fuel tank is empty or the fuel system contains stale fuel.<br>6. The spark plug wire is loose or disconnected.<br>7. The spark plug is pitted, fouled, or the gap is incorrect.<br>8. The fuel vent cap is restricted.<br>9. The engine oil level in the engine crankcase is too low or too high. | 1. Insert the key into the ignition and turn it to the On position.<br>2. Move the choke to the On position and press the primer 3 times.<br>3. Open the fuel shutoff valve.<br>4. Move the throttle to the Fast position.<br>5. Drain and/or fill the fuel tank with fresh gasoline (not more than 30 days old). If the problem persists, contact an Authorized Service Dealer.<br>6. Connect the wire to the spark plug.<br>7. Check the spark plug and adjust the gap if necessary. Replace the spark plug if it is pitted, fouled, or cracked.<br>8. Remove the vent restriction or replace the fuel cap.<br>9. Add or drain oil to adjust the oil level in the engine crankcase to the Full mark on the dipstick. |
| Engine runs rough | 1. The choke is in the On position.<br>2. The fuel shutoff valve is not completely open.<br>3. The fuel tank is nearly empty or contains stale fuel.<br>4. The spark plug wire is loose.<br>5. The spark plug is pitted, fouled, or the gap is incorrect.<br>6. The engine oil level in the engine crankcase is too low or too high. | 1. Move the choke to the Off position.<br>2. Open the fuel shutoff valve.<br>3. Drain and fill the fuel tank with fresh gasoline (not more than 30 days old). If the problem persists, contact an Authorized Service Dealer.<br>4. Connect the wire to the spark plug.<br>5. Check the spark plug and adjust the gap if necessary. Replace the spark plug if it is pitted, fouled, or cracked.<br>6. Add or drain oil to adjust the oil level in the engine crankcase to the Full mark on the dipstick. |

| Problem | Possible Cause | Corrective Action |
|---|---|---|
| Engine runs, but the machine discharges snow poorly or not at all | 1. The throttle is not in the Fast position when throwing snow. | 1. Move the throttle to the Fast position. |
| | 2. The machine is moving too fast to clear the snow. | 2. Shift the machine into a lower gear. |
| | 3. You are trying to remove too much snow per swath. | 3. Reduce the amount of snow removed per swath. |
| | 4. You are trying to remove extremely heavy or wet snow. | 4. Don't overload the machine with extremely heavy or wet snow. |
| | 5. The discharge chute is plugged. | 5. Unclog the discharge chute. |
| | 6. The auger/impeller drive belt is loose or is off the pulley. | 6. Install and/or adjust the auger/impeller drive belt; refer to www.Toro.com for servicing information or take the machine to an Authorized Service Dealer. |
| | 7. The auger/impeller drive belt is worn or broken. | 7. Replace the auger/impeller drive belt; refer to www.Toro.com for servicing information or take the machine to an Authorized Service Dealer. |
| Discharge chute either does not lock into place or does not move | 1. The discharge chute latch is not properly adjusted. | 1. Adjust the discharge chute latch. |
| The machine does not properly clear the snow off the surface | 1. The skids and/or scraper are not properly adjusted. | 1. Adjust the skids and/or the scraper. |
| | 2. The pressure in the tires is not equal. | 2. Check and adjust the pressure in one or both tires. |

# Notes:

# Notes:

# International Distributor List

| Distributor: | Country: | Phone Number: | Distributor: | Country: | Phone Number: |
|---|---|---|---|---|---|
| Atlantis Su ve Sulama Sisstemleri Lt | Turkey | 90 216 344 86 74 | Maquiver S.A. | Colombia | 57 1 236 4079 |
| Balama Prima Engineering Equip. | Hong Kong | 852 2155 2163 | Maruyama Mfg. Co. Inc. | Japan | 81 3 3252 2285 |
| B-Ray Corporation | Korea | 82 32 551 2076 | Agrolanc Kft | Hungary | 36 27 539 640 |
| Casco Sales Company | Puerto Rico | 787 788 8383 | Mountfield a.s. | Czech Republic | 420 255 704 220 |
| Ceres S.A. | Costa Rica | 506 239 1138 | Munditol S.A. | Argentina | 54 11 4 821 9999 |
| CSSC Turf Equipment (pvt) Ltd. | Sri Lanka | 94 11 2746100 | Oslinger Turf Equipment SA | Ecuador | 593 4 239 6970 |
| Cyril Johnston & Co. | Northern Ireland | 44 2890 813 121 | Oy Hako Ground and Garden Ab | Finland | 358 987 00733 |
| Equiver | Mexico | 52 55 539 95444 | Parkland Products Ltd. | New Zealand | 64 3 34 93760 |
| Femco S.A. | Guatemala | 502 442 3277 | Prato Verde S.p.A. | Italy | 39 049 9128 128 |
| G.Y.K. Company Ltd. | Japan | 81 726 325 861 | Prochaska & Cie | Austria | 431 278 5100 |
| Geomechaniki of Athens | Greece | 30 10 935 0054 | RT Cohen 2004 Ltd. | Israel | 972 986 17979 |
| Guandong Golden Star | China | 86 20 876 51338 | Riversa | Spain | 34 9 52 83 7500 |
| Hako Ground and Garden | Sweden | 46 35 10 0000 | Sc Svend Carlsen A/S | Denmark | 45 66 109 200 |
| Hako Ground and Garden | Norway | 47 22 90 7760 | Solvert S.A.S. | France | 33 1 30 81 77 00 |
| Hayter Limited (U.K.) | United Kingdom | 44 1279 723 444 | Spypros Stavrinides Limited | Cyprus | 357 22 434131 |
| Hydroturf Int. Co Dubai | United Arab Emirates | 97 14 347 9479 | Surge Systems India Limited | India | 91 1 292299901 |
| Hydroturf Egypt LLC | Egypt | 202 519 4308 | T-Markt Logistics Ltd. | Hungary | 36 26 525 500 |
| Irriamc | Portugal | 351 21 238 8260 | Toro Australia | Australia | 61 3 9580 7355 |
| Irrigation Products Int'l Pvt Ltd. | India | 86 22 83960789 | Toro Europe NV | Belgium | 32 14 562 960 |
| Jean Heybroek b.v. | Netherlands | 31 30 639 4611 | | | |

## European Privacy Notice

The Information Toro Collects
Toro Warranty Company (Toro) respects your privacy. In order to process your warranty claim and contact you in the event of a product recall, we ask you to share certain personal information with us, either directly or through your local Toro company or dealer.

The Toro warranty system is hosted on servers located within the United States where privacy law may not provide the same protection as applies in your country.

BY SHARING YOUR PERSONAL INFORMATION WITH US, YOU ARE CONSENTING TO THE PROCESSING OF YOUR PERSONAL INFORMATION AS DESCRIBED IN THIS PRIVACY NOTICE.

The Way Toro Uses Information
Toro may use your personal information to process warranty claims, to contact you in the event of a product recall and for any other purpose which we tell you about. Toro may share your information with Toro's affiliates, dealers or other business partners in connection with any of these activities. We will not sell your personal information to any other company. We reserve the right to disclose personal information in order to comply with applicable laws and with requests by the appropriate authorities, to operate our systems properly or for our own protection or that of other users.

Retention of your Personal Information
We will keep your personal information as long as we need it for the purposes for which it was originally collected or for other legitimate purposes (such as regulatory compliance), or as required by applicable law.

Toro's Commitment to Security of Your Personal Information
We take reasonable precautions in order to protect the security of your personal information. We also take steps to maintain the accuracy and current status of personal information.

Access and Correction of your Personal Information
If you would like to review or correct your personal information, please contact us by email at legal@toro.com.

## Australian Consumer Law

Australian customers will find details relating to the Australian Consumer Law either inside the box or at your local Toro Dealer.

# The Toro Warranty and The Toro GTS Starting Guarantee

## Conditions and Products Covered

The Toro Company and its affiliate, Toro Warranty Company, pursuant to an agreement between them, jointly promise to repair for the original purchaser[1] the Toro Product listed below if defective in materials or workmanship or if the Toro GTS (Guaranteed to Start) engine will not start on the first or second pull, provided the routine maintenance required in the *Operator's Manual* have been performed.

The following time periods apply from the date of purchase:

| Products | Warranty Period |
|---|---|
| Walk Power Mowers | |
| • Cast Deck | 5 years Residential Use[2]<br>90 Days Commercial Use |
| • Engine | 5 years GTS Guarantee, Residential Use[3] |
| • Battery | 2 years |
| • Steel Deck | 2 years Residential Use[2]<br>90 Days Commercial Use |
| • Engine | 2 years GTS Guarantee, Residential Use[3] |
| TimeMaster Mowers | 3 years Residential Use[2]<br>90 Days Commercial Use |
| • Engine | 3 years GTS Guarantee, Residential Use[3] |
| • Battery | 2 years |
| Electric Hand Held Products | 2 years Residential Use[2]<br>No Warranty for Commercial Use |
| Snowthrowers | |
| • Single Stage | 2 years Residential Use[2]<br>45 Days Commercial Use |
| • Engine | 2 years GTS Guarantee, Residential Use[3] |
| • Two Stage | 3 years Residential Use[2]<br>45 Days Commercial Use |
| • Chute, chute deflector and impeller housing cover | Lifetime (original owner only)[5] |
| Electric Snowthrowers | 2 years Residential Use[2]<br>No Warranty for Commercial Use |
| All Ride-On Units Below | |
| • Engine | See engine manufacturer's warranty[4] |
| • Battery | 2 years Residential Use[2] |
| • Attachments | 2 years Residential Use[2] |
| DH Lawn & Garden Tractors | 2 years Residential Use[2]<br>90 Days Commercial Use |
| XLS Lawn & Garden Tractors | 3 years Residential Use[2]<br>90 Days Commercial Use |
| TimeCutter | 3 years Residential Use[2]<br>90 Days Commercial Use |
| TITAN Mowers | 3 years or 240 hours[5] |
| • Frame | Lifetime (original owner only)[6] |
| Z Master Mowers — 2000 Series | 4 years or 500 hours[5] |
| • Frame | Lifetime (original owner only)[6] |

[1]Original Purchaser means the person who originally purchased the Toro Product.

[2]Residential use means use of the product on the same lot as your home. Use at more than one location is considered commercial use and the commercial use warranty would apply.

[3]The Toro GTS Starting Guarantee does not apply when the product is used commercially.

[4]Some engines used on Toro Products are warranted by the engine manufacturer.

[5]Whichever occurs first.

[6]Lifetime Frame Warranty - If the main frame, consisting of the parts welded together to form the tractor structure that other components such as the engine are secured to, cracks or breaks in normal use, it will be repaired or replaced, at Toro's option, under warranty at no cost for parts and labor. Frame failure due to misuse or abuse and failure or repair required due to rust or corrosion are not covered.

This warranty covers the cost of parts and labor, but you must pay transportation costs.

Warranty may be denied if the hour meter is disconnected, altered, or shows signs of being tampered with.

## Owner Responsibilities

You must maintain your Toro Product by following the maintenance procedures described in the *Operator's Manual*. Such routine maintenance, whether performed by a dealer or by you, is at your expense.

## Instructions for Obtaining Warranty Service

If you think that your Toro Product contains a defect in materials or workmanship, follow this procedure:

1. Contact your seller to arrange service of the product. If for any reason it is impossible for you to contact your seller, you may contact any Toro Authorized Distributor to arrange service. See attached Distributor List.
2. Bring the product and your proof of purchase (sales receipt) to the servicing outlet. If for any reason you are dissatisfied with the servicing outlet's analysis or with the assistance provided, contact us at:

   Toro Customer Care Department, RLC Division
   Toro Warranty Company
   8111 Lyndale Avenue South
   Bloomington, MN 55420-1196
   001–952–948–4707

## Items and Conditions Not Covered

This express warranty does not cover the following:

- Cost of regular maintenance service or wear parts, such as blades, rotor blades (paddles), scraper blades, belts, fuel, lubricants, oil changes, spark plugs, pneumatic tires, cable/linkage or brake adjustments
- Any product or part which has been altered or misused and requires replacement or repair due to accidents or lack of proper maintenance
- Repairs necessary due to failure to use fresh fuel (less than one month old), or failure to properly prepare the unit prior to any period of non-use over one month
- All repairs covered by these warranties must be performed by an authorized Toro servicing outlet using approved replacement parts.

## General Conditions

The purchaser is covered by the national laws of each country. The rights to which the purchaser is entitled with the support of these laws are not restricted by this warranty.