Form No. 3376-290 Rev A

20in Recycler®/Rear Bagging Lawn Mower

Model No. 20318—Serial No. 313000001 and Up

Operator's Manual

Introduction

This rotary-blade, walk-behind lawn mower is intended to be used by residential homeowners or professional, hired operators. It is designed primarily for cutting grass on well-maintained lawns on residential or commercial properties. It is not designed for cutting brush or for agricultural uses.

Read this information carefully to learn how to operate and maintain your product properly and to avoid injury and product damage. You are responsible for operating the product properly and safely.

You may contact Toro directly at www.Toro.com for product and accessory information, help finding a dealer, or to register your product.

Whenever you need service, genuine Toro parts, or additional information, contact an Authorized Service Dealer or Toro Customer Service and have the model and serial numbers of your product ready. Figure 1 identifies the location of the model and serial numbers on the product. Write the numbers in the space provided.

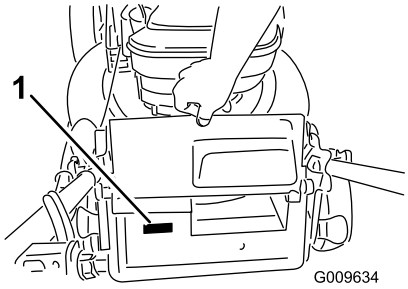

Figure 1

1. Model and serial number plate

Model No. _____

Serial No. _____

This manual identifies potential hazards and has safety messages identified by the safety alert symbol (Figure 2), which signals a hazard that may cause serious injury or death if you do not follow the recommended precautions.



Figure 2

1. Safety alert symbol

This manual uses 2 words to highlight information. **Important** calls attention to special mechanical information and **Note** emphasizes general information worthy of special attention.

WARNING

CALIFORNIA
Proposition 65 Warning

This product contains a chemical or chemicals known to the State of California to cause cancer, birth defects, or other reproductive harm.

The engine exhaust from this product contains chemicals known to the State of California to cause cancer, birth defects, or other reproductive harm.

Contents

Introduction 1
Safety 2
- General Operation 2
- Slope Operation 2
- Children 2
- Service 3
- Safety and Instructional Decals 4

Setup 4
- Installing the Handle 4
- Installing the Recoil-starter Rope in the Rope Guide 5
- Filling the Engine with Oil 5

Product Overview 6
Operation 6
- Attachments/Accessories 6
- Filling the Fuel Tank 6
- Checking the Engine Oil Level 7
- Adjusting the Cutting Height 7
- Starting the Engine 8
- Stopping the Engine 8
- Mulching the Clippings 8
- Bagging the Clippings 8

© 2012—The Toro® Company
8111 Lyndale Avenue South
Bloomington, MN 55420

Register at www.Toro.com.

Original Instructions (EN)
Printed in the USA
All Rights Reserved

3376-290 A

Operating Tips 9
Maintenance 10
Recommended Maintenance Schedule(s) 10
Preparing for Maintenance 10
Servicing the Air Cleaner 11
Changing the Engine Oil 11
Replacing the Blade 12
Cleaning the underside of the Machine 12
Storage 13
Preparing the Machine for Storage 13
Folding the Handle 13
Removing the Machine from Storage 13

Safety

This lawn mower meets or exceeds the CPSC blade safety requirements for walk-behind rotary lawn mowers and the B71.1 specifications of the American National Standards Institute in effect at the time of production.

Read and understand the contents of this manual before you start the engine.

The safety alert symbol (Figure 2) is used to alert you to potential personal injury hazards. Obey all safety messages that follow this symbol to avoid possible injury or death. Improperly using or maintaining this mower could result in injury or death. To reduce this potential, comply with the following safety instructions.

The following instructions have been adapted from the ANSI/OPEI standard B71.1-2003.

This cutting machine is capable of amputating hands and feet and of throwing objects. Failure to observe the following safety instructions could result in serious injury or death.

General Operation

- Read, understand, and follow all instructions on the machine and in the manual(s) before starting.
- Do not put hands or feet near or under the machine. Keep clear of the discharge opening at all times.
- Only allow responsible adults, who are familiar with the instructions, to operate this machine.
- Clear the area of objects such as rocks, wire, toys, etc., which could be thrown by the blade. Stay behind the handle when the engine is running.
- Be sure the area is clear of bystanders before operating. Stop machine if anyone enters the area.
- Do not operate machine barefooted or while wearing sandals. Always wear substantial footwear.
- Do not pull machine backward unless absolutely necessary. Always look down and behind before and while moving backward.
- Never direct discharged material toward anyone. Avoid discharging material against a wall or obstruction. Material may ricochet back toward the operator. Stop the blade when crossing gravel surfaces.
- Do not operate machine without the entire grass catcher, discharge guard, rear guard, or other safety protective devices in place and working.
- Never leave a running machine unattended.
- Stop the engine and wait until the blade comes to a complete stop before cleaning the machine, removing grass catcher, or unclogging the discharge guard.
- Operate machine only in daylight or good artificial light.
- Do not operate machine while under the influence of alcohol or drugs.
- Never operate mower in wet grass. Always be sure of your footing; walk; never run.
- Disengage the drive system, if so equipped, before starting the engine.
- If the machine should start to vibrate abnormally, stop the engine and check for the cause immediately. Vibration is generally a warning of trouble.
- Always wear eye protection when operating machine.
- Lightning can cause severe injury or death. If you see lightning or hear thunder in the area, do not operate the machine; seek shelter.
- See manufacturer's instructions for proper operation and installation of accessories. Only use accessories approved by the manufacturer.

Slope Operation

Slopes are a major factor related to slip and fall accidents, which can result in severe injury. Operation on all slopes require extra caution. If you feel uneasy on a slope, do not mow it.

- Mow across the face of slopes; never up and down. Exercise extreme caution when changing direction on slopes.
- Watch for holes, ruts, bumps, rocks, or other hidden objects. Uneven terrain could cause a slip and fall accident. Tall grass can hide obstacles.
- Do not mow on wet grass or excessively steep slopes. Poor footing could cause a slip and fall accident.
- Do not mow near drop-offs, ditches, or embankments. You could lose your footing or balance.

Children

Tragic accidents can occur if the operator is not alert to the presence of children. Children are often attracted to the machine and the mowing activity. **Never** assume that children will remain where you last saw them.

- Keep children out of the mowing area and under the watchful care of a responsible adult other than the operator.
- Be alert and turn mower off if a child enters the area.

- Never allow children to operate the machine.
- Use extra care when approaching blind corners, shrubs, trees, or other objects that may block your view of a child.

Service

Safe Handling of Gasoline

To avoid personal injury or property damage, use extreme care in handling gasoline. Gasoline is extremely flammable and the vapors are explosive.

- Extinguish all cigarettes, cigars, pipes, and other sources of ignition.
- Use only an approved gasoline container.
- Never remove gas cap or add fuel with the engine running. Allow engine to cool before refueling.
- Never refuel the machine indoors.
- Never store the machine or fuel container where there is an open flame, spark, or pilot light such as on a water heater or on other appliances.
- Never fill containers inside a vehicle or on a truck or trailer bed with a plastic liner. Always place containers on the ground away from your vehicle before filling.
- Remove gas-powered equipment from the truck or trailer and refuel it on the ground. If this is not possible, then refuel such equipment with a portable container, rather than from a gasoline dispenser nozzle.
- Keep the nozzle in contact with the rim of the fuel tank or container opening at all times until fueling is complete. Do not use a nozzle lock-open device.
- If fuel is spilled on clothing, change clothing immediately.
- Never overfill fuel tank. Replace gas cap and tighten securely.

⚠ WARNING

Exhaust contains carbon monoxide, an odorless, deadly poison that can kill you.

Do not run the engine indoors or in an enclosed area.

General Service

- Never operate machine in a closed area.
- Keep all nuts and bolts tight to be sure the equipment is in safe working condition.
- Never tamper with safety devices. Check their proper operation regularly.
- Keep machine free of grass, leaves, or other debris build-up. Clean up oil or fuel spillage and remove any fuel-soaked debris. Allow machine to cool before storing.
- If you strike a foreign object, stop and inspect the machine. Repair, if necessary, before starting.
- Never make any adjustments or repairs with the engine running. Disconnect the spark-plug wire and ground against engine to prevent unintended starting.
- Check grass catcher components and the discharge guard frequently and replace with manufacturer's recommended parts, when necessary.
- Mower blades are sharp. Wrap the blade or wear gloves, and use extra caution when servicing them.
- Do not change the engine governor setting or overspeed the engine.
- Maintain or replace safety and instruction labels, as necessary.

Safety and Instructional Decals

Important: Safety and instruction decals are located near areas of potential danger. Replace damaged decals.



94-8072



117–2718

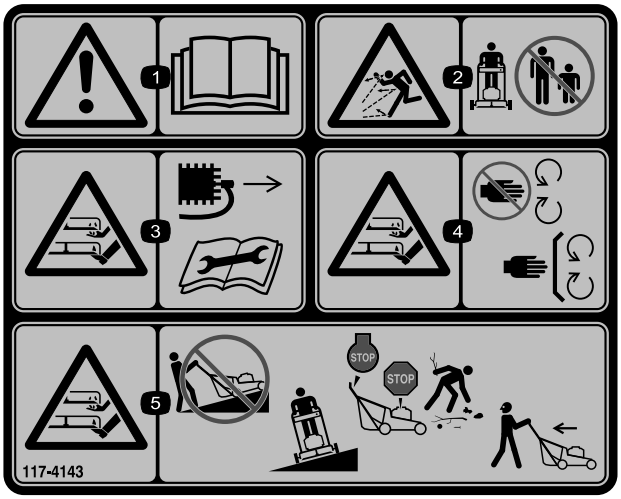

117-4143

1. Warning—read the *Operator's Manual*.
2. Thrown object hazard—keep bystanders a safe distance from the machine.
3. Cutting/dismemberment hazard of hand or foot, mower blade—disconnect the spark-plug wire and read the instructions before servicing or performing maintenance.
4. Cutting/dismemberment hazard of hand or foot, mower blade—stay away from moving parts and keep all guards and shields in place.
5. Cutting/dismemberment hazard of hand or foot, mower blade—do not mow up and down slopes, only mow across; stop the mower and engine, pick up debris before operating; look behind and down when reversing.

Setup

Important: Remove and discard the protective plastic sheet that covers the engine.

Installing the Handle

⚠ WARNING

Folding or unfolding the handle improperly can damage the cables, causing an unsafe operating condition.

- **Do not damage the cables when folding or unfolding the handle.**
- **If a cable is damaged, contact an Authorized Service Dealer.**

1. Remove the handle knobs from the machine housing.
2. Move the handle to the operating position (Figure 3).

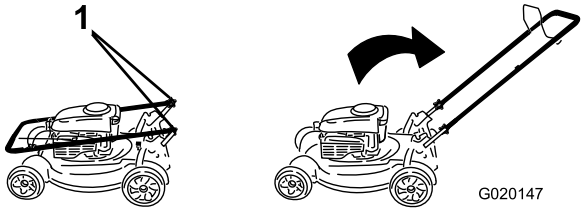

Figure 3

1. Handle knob (2)

Important: Route the cables to the outside of the handle as you install the handle.

3. Install the handle knobs and tighten them firmly by hand (Figure 3).

Installing the Recoil-starter Rope in the Rope Guide

Important: To start the engine safely and easily whenever you use the machine, install the recoil-starter rope in the rope guide.

Hold the blade-control bar to the upper handle and pull the recoil-starter rope through the rope guide on the handle (Figure 4).

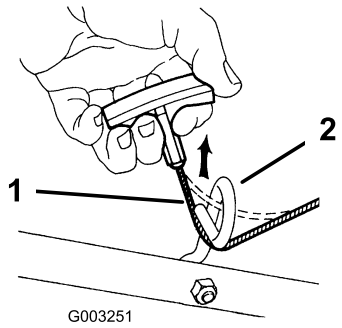

Figure 4

1. Recoil-starter rope
2. Rope guide

Filling the Engine with Oil

Important: Your machine does not come with oil in the engine. Before starting the engine, fill the engine with oil.

1. Move the machine to a level surface.
2. Remove the dipstick (Figure 5) and pour about 3/4 of the crankcase capacity of oil into the oil-fill tube.

   Note: Max. fill: 22 oz. (0.65 l), type: 10W-30 or SAE 30 detergent oil with an API service classification of SJ or higher.

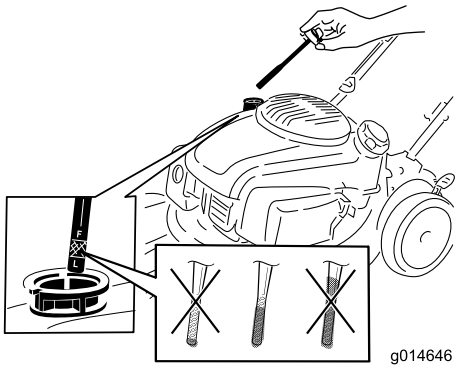

Figure 5

3. Wipe off the dipstick end with a clean cloth.
4. Insert the dipstick into the oil-fill tube, but **do not** screw it in.
5. Remove the dipstick and read the oil level on the dipstick (Figure 5).
   - If the oil level is too low, add a small amount of oil slowly to the oil-fill tube, and then repeat steps 3 through 5 until the oil level on the dipstick is correct.
   - If the oil level is too high, drain the excess oil until the oil level on the dipstick is correct. To drain the excess oil, refer to Changing the Engine Oil (page 11).

     Important: If the oil level in the crankcase is too low or too high and you run the engine, you may damage the engine.
6. Install the dipstick securely.

Important: *Change the engine oil after the first 5 operating hours*; change it yearly thereafter. Refer to Changing the Engine Oil (page 11).

Product Overview

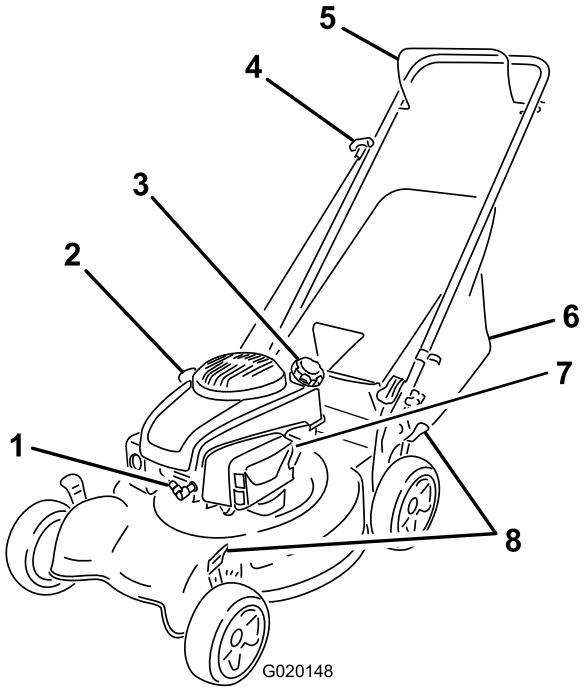

Figure 6

1. Spark plug
2. Oil fill/Dipstick
3. Fuel-tank cap
4. Recoil-start handle
5. Blade-control bar
6. Grass bag
7. Air filter
8. Cutting-height levers (4)

Operation

Attachments/Accessories

A selection of Toro approved attachments and accessories is available for use with the machine to enhance and expand its capabilities. Contact your Authorized Service Dealer or Distributor or go to www.Toro.com for a list of all approved attachments and accessories.

Filling the Fuel Tank

⚠ DANGER

Gasoline is extremely flammable and explosive. A fire or explosion from gasoline can burn you and others.

- **To prevent a static charge from igniting the gasoline, place the container and/or machine directly on the ground before filling, not in a vehicle or on an object.**
- **Fill the tank outdoors when the engine is cold. Wipe up spills.**
- **Do not handle gasoline when smoking or around an open flame or sparks.**
- **Store gasoline in an approved fuel container, out of the reach of children.**

- For best results, use only clean, fresh, unleaded gasoline with an octane rating of 87 or higher ((R+M)/2 rating method).
- Oxygenated fuel with up to 10% ethanol or 15% MTBE by volume is acceptable.
- **Do not** use ethanol blends of gasoline (such as E15 or E85) with more than 10% ethanol by volume. Performance problems and/or engine damage may result which may not be covered under warranty.
- **Do not** use gasoline containing methanol.
- **Do not** store fuel either in the fuel tank or fuel containers over the winter unless a fuel stabilizer is used.

Important: To reduce starting problems, add fuel stabilizer to the fuel all season, mixing it with gasoline less than 30 days old.

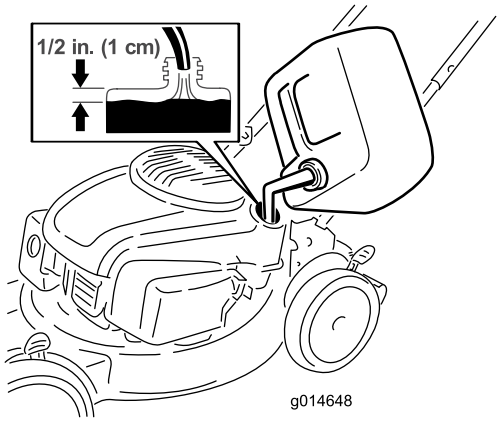

Figure 7

Checking the Engine Oil Level

Service Interval: Before each use or daily

Max. fill: 22 oz. (0.65 l), type: 10W-30 or SAE 30 detergent oil with an API service classification of SJ or higher.

1. Move the machine to a level surface.
2. Remove the dipstick (Figure 8).

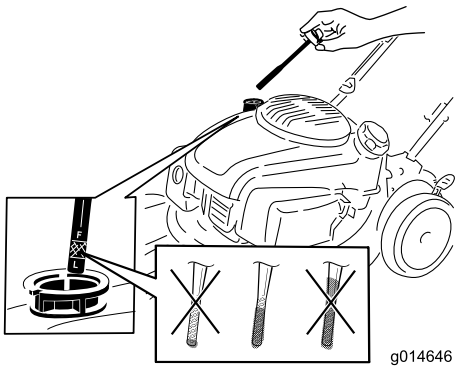

Figure 8

3. Wipe off the dipstick end with a clean cloth.
4. Insert the dipstick into the oil-fill tube, but **do not** screw it in.
5. Remove the dipstick and read the oil level; refer to Figure 8.
   - If the oil level is too low, add a small amount of oil slowly to the oil-fill tube, and then repeat steps 3 through 5 until the oil level on the dipstick is correct.
   - If the oil level is too high, drain the excess oil until the oil level on the dipstick is correct. To drain the excess oil, refer to Changing the Engine Oil (page 11).

Important: If the oil level in the crankcase is too low or too high and you run the engine, you may damage the engine.

6. Install the dipstick securely.

Adjusting the Cutting Height

⚠ WARNING

Adjusting the cutting height may bring you into contact with the moving blade, causing serious injury.

- **Stop the engine and wait for all moving parts to stop.**
- **Do not put your fingers under the housing when adjusting the cutting height.**

⚠ CAUTION

If the engine has been running, the muffler will be hot and can severely burn you. Keep away from the hot muffler.

Adjust the cutting height as desired. Set all 4 wheels to the same height.

Note: To raise the machine, move all the cutting-height levers forward; to lower the machine, move all the cutting-height levers rearward (Figure 9).

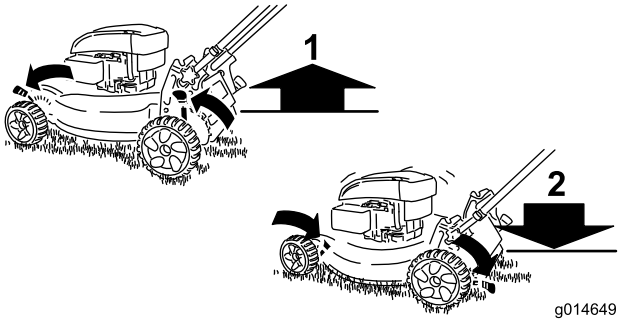

Figure 9

1. Raise the machine
2. Lower the machine

Note: The cutting height settings are 1 inch (25 mm); 1-1/2 inch (38 mm); 2 inches (51 mm); 2-1/2 inches (64 mm); 3 inches (76 mm); 3-1/2 inches (89 mm); and 4 inches (102 mm).

Starting the Engine

1. Hold the blade-control bar (Figure 10) against the handle.

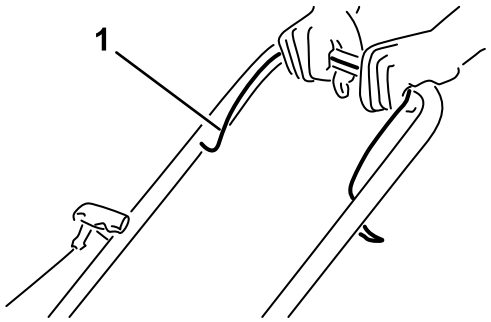

Figure 10

1. Blade-control bar

2. Pull recoil-start handle (Figure 11).

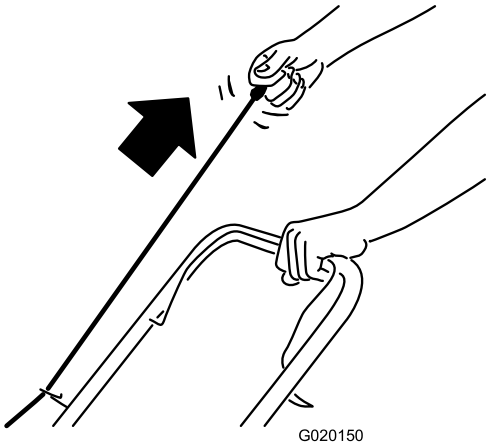

Figure 11

Note: If the machine does not start after several attempts, contact an Authorized Service Dealer.

Stopping the Engine

Service Interval: Before each use or daily

To stop the engine, release the blade control bar (Figure 12).

Important: When you release the blade- control bar, both the engine and blade should stop within 3 seconds. If they do not stop properly, stop using your machine immediately and contact an Authorized Service Dealer.

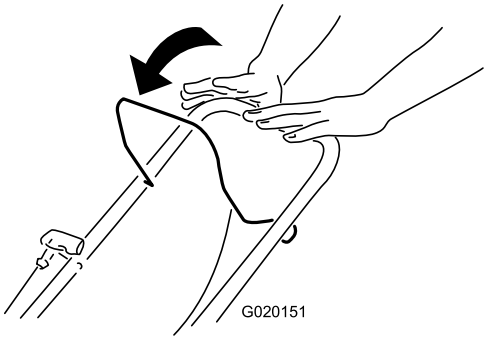

Figure 12

Mulching the Clippings

Your machine comes from the factory ready to mulch the grass and leaf clippings back into the lawn.

If the grass bag is on the machine, remove it before mulching the clippings. Refer to Removing the Grass Bag (page 9).

Bagging the Clippings

Use the grass bag when you want to collect grass and leaf clippings from the lawn.

⚠ WARNING

A worn grass bag could allow small stones and other similar debris to be thrown in the operator's or bystander's direction and result in serious personal injury or death to the operator or bystanders.

Check the grass bag frequently. If it is damaged, install a new Toro replacement bag.

⚠ WARNING

The blade is sharp; contacting the blade can result in serious personal injury.

Stop the engine and wait for all moving parts to stop before leaving the operating position.

Installing the Grass Bag

1. Lift up the rear deflector (Figure 13).

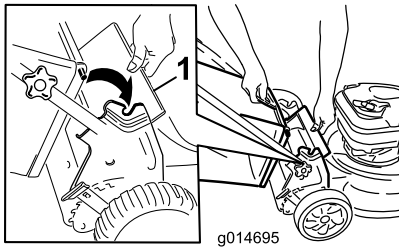

Figure 13

1. Rear deflector

2. Insert the grass-bag handle onto the notches on the handle brackets (Figure 13).

Removing the Grass Bag

1. Lift up the rear deflector (Figure 13).
2. Lift the grass-bag handle out from the notches on the handle brackets and remove the bag from the machine.
3. Close the rear deflector.

Operating Tips

General Mowing Tips

- Clear the area of sticks, stones, wire, branches, and other debris that the blade could hit.
- Avoid striking solid objects with the blade. Never deliberately mow over any object.
- If the machine strikes an object or starts to vibrate, immediately stop the engine, disconnect the wire from the spark plug, and examine the machine for damage.
- For best performance, install a new blade before the cutting season begins.
- Replace the blade when necessary with a Toro replacement blade.

Cutting Grass

- Cut only about a third of the grass blade at a time. Do not cut below the 2 inch (51 mm) setting unless the grass is sparse or it is late fall when grass growth begins to slow down. Refer to Adjusting the Cutting Height (page 7).
- When cutting grass over 6 inches (15 cm) tall, mow at the highest cutting height setting and walk slower; then mow again at a lower setting for the best lawn appearance. If the grass is too long, the machine may plug and cause the engine to stall.
- Mow only dry grass or leaves. Wet grass and leaves tend to clump on the yard and can cause the machine to plug or the engine to stall.

⚠ WARNING

Wet grass or leaves can cause serious injury if you slip and contact the blade. Mow only in dry conditions.

- Alternate the mowing direction. This helps disperse the clippings over the lawn for even fertilization.
- If the finished lawn appearance is unsatisfactory, try one or more of the following:
  - Replace the blade or have it sharpened.
  - Walk at a slower pace while mowing.
  - Raise the cutting height on your machine.
  - Cut the grass more frequently.
  - Overlap cutting swaths instead of cutting a full swath with each pass.
  - Set the cutting height on the front wheels one notch lower than the rear wheels. For example, set the front wheels at 2 inches (51 mm) and the rear wheels at 2-1/2 inches (64 mm).

Cutting Leaves

- After cutting the lawn, ensure that half of the lawn shows through the cut leaf cover. You may need to make more than one pass over the leaves.
- If there are more than 5 inches (13 cm) of leaves on the lawn, set the front cutting height one or two notches higher than the rear cutting height.
- Slow down your mowing speed if the machine does not cut the leaves finely enough.

Maintenance

Note: Determine the left and right sides of the machine from the normal operating position.

Recommended Maintenance Schedule(s)

Maintenance Service Interval	Maintenance Procedure
After the first 5 hours	• Change the engine oil.
Before each use or daily	• Check the engine oil level. • Ensure that the engine stops within 3 seconds after releasing the blade-control bar.
After each use	• Clean grass clippings and dirt from under the machine.
Every 25 hours	• Check the air cleaner for dirty, loose, or damaged parts, and clean or replace them if necessary.
Every 50 hours	• Change the engine oil.
Every 100 hours	• Replace the air-cleaner element (more frequently when operating the machine in dusty or dirty operating conditions). • Clean the cooling system (refer to your engine owner's manual). • Replace the spark plug.
Before storage	• Empty the fuel tank before repairs as directed and before annual storage.
Yearly	• Replace the blade or have it sharpened (more frequently if the edge dulls quickly). • Refer to your Engine Operator's Manual for any additional yearly maintenance procedures.

Important: Refer to your *Engine Operator's Manual* for additional maintenance procedures.

Preparing for Maintenance

1. Stop the engine and wait for all moving parts to stop.
2. Disconnect the spark-plug wire from the spark plug (Figure 14) before performing any maintenance procedure.

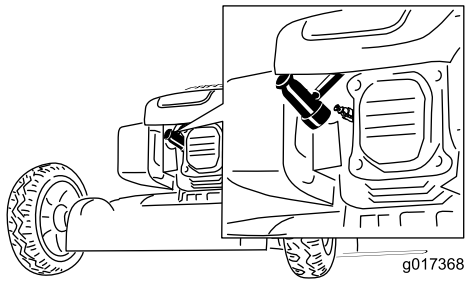

Figure 14

1. Spark-plug wire

3. After performing the maintenance procedure(s), connect the spark-plug wire to the spark plug.

Important: Before tipping the machine to change the oil or replace the blade, allow the fuel tank to run dry through normal usage. If you must tip the machine prior to running out of fuel, use a hand fuel pump to remove the fuel. Always tip the machine onto its side with the dipstick down.

⚠ WARNING

Tipping the machine may cause the fuel to leak. Gasoline is flammable, explosive and can cause personal injury.

Run the engine dry or remove the gasoline with a hand pump; never siphon.

Servicing the Air Cleaner

Service Interval: Every 25 hours/Yearly (whichever comes first)—Check the air cleaner for dirty, loose, or damaged parts, and clean or replace them if necessary.

Every 100 hours/Yearly (whichever comes first)

1. Perform the pre-maintenance procedures; refer to Preparing for Maintenance (page 10).
2. Unscrew and open the air-cleaner cover (Figure 15).

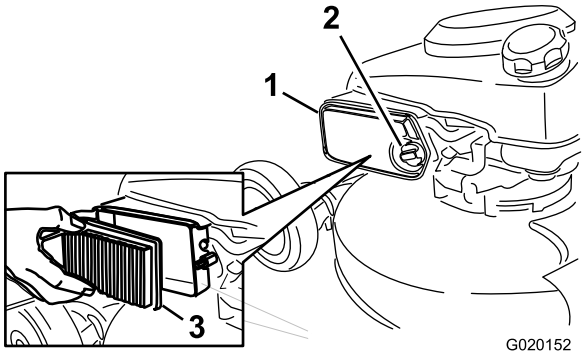

Figure 15

1. Screw
2. Air-cleaner cover
3. Air-cleaner element

3. Replace the air-cleaner element.
4. Install the air-cleaner cover.

Changing the Engine Oil

Service Interval: After the first 5 hours

Every 50 hours/Yearly (whichever comes first)

Run the engine a few minutes before changing the oil to warm it. Warm oil flows better and carries more contaminants.

1. Perform the pre-maintenance procedures; refer to Preparing for Maintenance (page 10).
2. Remove the dipstick (Figure 16).

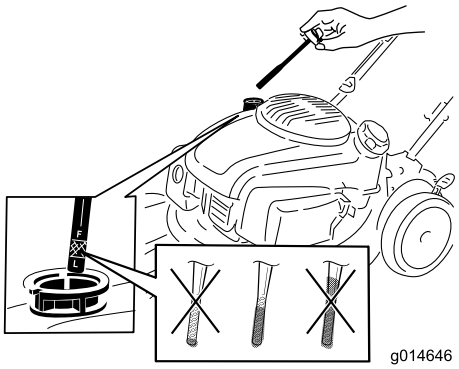

Figure 16

3. Set an oil-drain pan beside the machine by the dipstick.
4. Tip the machine onto its side, with the dipstick down, to drain the used oil out through the oil-fill tube (Figure 17).

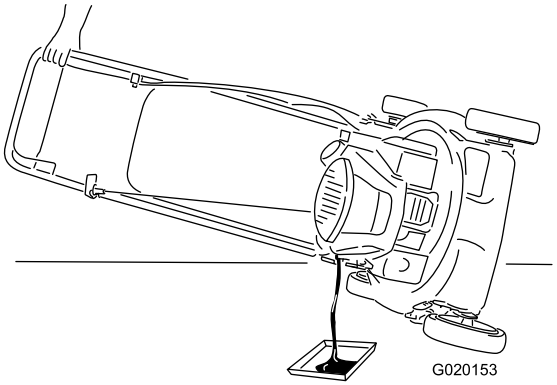

Figure 17

5. After draining the used oil, return the machine to the normal operating position.
6. Remove the dipstick and pour about 3/4 of the crankcase capacity of oil into the oil-fill tube.

   Note: Max. fill: 22 oz. (0.65 l), type: 10W-30 or SAE 30 detergent oil with an API service classification of SJ or higher.
7. Wipe off the dipstick end with a clean cloth.
8. Insert the dipstick into the oil-fill tube, but **do not** screw it in.
9. Remove the dipstick and read the oil level on the dipstick (Figure 16).
   - If the oil level is too low, add a small amount of oil slowly to the oil-fill tube, and then repeat steps 7 through 9 until the oil level on the dipstick is correct.
   - If the oil level is too high, drain the excess oil until the oil level on the dipstick is correct. To drain the excess oil, refer to Changing the Engine Oil (page 11).

     Important: If the oil level in the crankcase is too low or too high and you run the engine, you may damage the engine.
10. Install the dipstick securely.
11. Recycle the used oil properly.

Replacing the Blade

Service Interval: Yearly

Important: ***You will need a torque wrench to install the blade properly.*** **If you do not have a torque wrench or are uncomfortable performing this procedure, contact an Authorized Service Dealer.**

Examine the blade whenever you run out of gasoline. If the blade is damaged or cracked, replace it immediately. If the blade edge is dull or nicked, have it sharpened or replace it.

⚠ WARNING

The blade is sharp; contacting the blade can result in serious personal injury.

- **Disconnect the wire from the spark plug.**
- **Wear gloves when servicing the blade.**

1. Disconnect the spark-plug wire from the spark plug. Refer to Preparing for Maintenance (page 10).
2. Tip the machine onto its side, with the air filter up.
3. Use a block of wood to hold the blade steady.
4. Remove the blade (turn the blade bolt counterclockwise), saving all the mounting hardware.
5. Install the new blade (turn the blade bolt clockwise) and all mounting hardware (Figure 18).

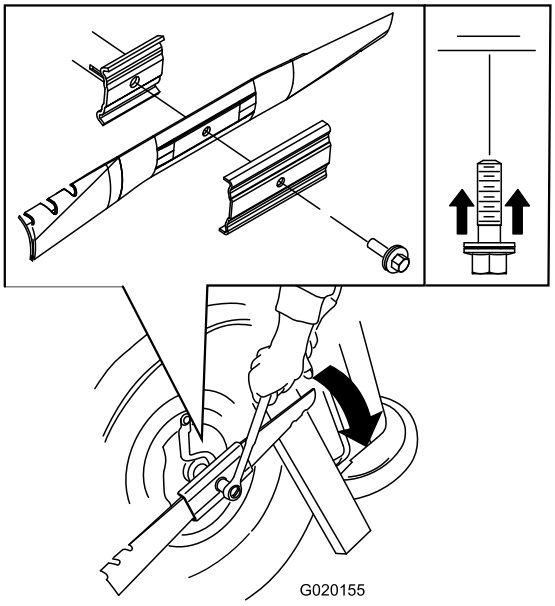

Figure 18

Important: **Position the curved ends of the blade to point toward the machine housing.**

6. **Use a torque wrench to tighten the blade bolt to 60 ft-lb (82 N-m).**

Important: **A bolt torqued to 60 ft-lb (82 N-m) is very tight. While holding the blade with a block of wood, put your weight behind the ratchet or wrench and tighten the bolt securely. This bolt is very difficult to overtighten.**

Cleaning the underside of the Machine

Service Interval: After each use

⚠ WARNING

The machine may dislodge material from under the machine housing.

- **Wear eye protection.**
- **Stay in the operating position (behind the handle).**
- **Do not allow bystanders in the area.**

1. With the engine running on a flat paved surface, spray a stream of water in front of the **right** rear wheel (Figure 19).

   The water will splash into the path of the blade, cleaning out the clippings.



Figure 19

2. When no more clippings come out, stop the water and move the machine to a dry area.
3. Run the engine for a few minutes to dry the housing to prevent it from rusting.

Storage

Store the machine in a cool, clean, dry place.

Preparing the Machine for Storage

⚠ WARNING

Gasoline vapors can explode.

- **Do not store gasoline more than 30 days.**
- **Do not store the machine in an enclosure near an open flame.**
- **Allow the engine to cool before storing it.**

1. On the last refueling of the year, add fuel stabilizer to the fuel as directed by the engine manufacturer.
2. Run the machine until the engine stops from running out of fuel.
3. Prime the engine and start it again.
4. Allow the engine to run until it stops. When you can no longer start the engine, it is sufficiently dry.
5. Disconnect the wire from the spark plug.
6. Remove the spark plug, add 1 oz. (30 ml) of oil through the spark plug hole, and pull the starter rope **slowly** several times to distribute oil throughout the cylinder to prevent cylinder corrosion during the off-season.
7. Install the spark plug and tighten it with a torque wrench to 15 ft-lb (20 N-m).
8. Tighten all nuts, bolts, and screws.

Folding the Handle

⚠ WARNING

Folding or unfolding the handle improperly can damage the cables, causing an unsafe operating condition.

- **Do not damage the cables when folding or unfolding the handle.**
- **If a cable is damaged, contact an Authorized Service Dealer.**

1. Loosen the handle knobs until you can move the handle freely (Figure 20).

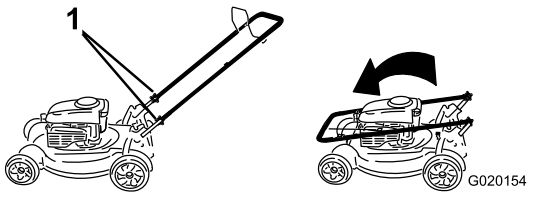

Figure 20

1. Handle knob (2)

2. Move the handle forward as shown in Figure 20.

Removing the Machine from Storage

Connect the wire to the spark plug.

Notes:

Notes:

The Toro Total Coverage Guarantee

A 2-Year Full Warranty (45 Day Limited Warranty for Commercial Use)

The Toro GTS Starting Guarantee

A 3-Year Full Warranty (Not Applicable for Commercial Use)

22 in Recycler®
20 in Mulcher/Bagger
Walk Power Mowers

Conditions and Products Covered

The Toro Company and its affiliate, Toro Warranty Company, pursuant to an agreement between them, jointly promise to repair the Toro Product listed below if used for residential purposes*; if it is defective in materials or workmanship or if it stops functioning due to the failure of a component; or if the Toro GTS (Guaranteed to Start) engine will not start on the first or second pull, provided the routine maintenance required in the *Operator's Manual* have been performed.

This warranty covers the cost of parts and labor, but you must pay transportation costs.

The following time periods apply from the date of purchase:

Products	Warranty Period
22 in Recycler and 20 in Mulcher/Bagger and Attachments	2 - year full warranty
GTS (Guaranteed to Start)	3 - year full warranty
Engine	3 - year full warranty
Battery	1 - year full warranty

Limited Warranty for Commercial Use*

Gas-powered Toro Products used for commercial, institutional, or rental use, are warranted for 45 days against defects in materials or workmanship. Components failing due to normal wear are not covered by this warranty.

The Toro GTS (Guaranteed to Start) Starting Guarantee does not apply when the product is used commercially*.

Instructions for Obtaining Warranty Service

If you think that your Toro Product contains a defect in materials or workmanship, or if a normal, able-bodied adult can no longer start your product's engine in one or two pulls, follow this procedure:

1. Contact any Authorized Toro Service Dealer to arrange service at their dealership. To locate a dealer convenient to you, refer to the *Yellow Pages* of your telephone directory (look under “Lawn Mowers”) or access our web site at www.Toro.com. You may also call the numbers listed in item #3 to use the 24-hour Toro Dealer locator system.
2. Bring the product and your proof of purchase (sales receipt) to the Service Dealer. The dealer will diagnose the problem and determine if it is covered under warranty.
3. If for any reason you are dissatisfied with the Service Dealer’s analysis or with the assistance provided, contact us at:

   Customer Care Department, RLC Division
   The Toro Company
   8111 Lyndale Avenue South
   Bloomington, MN 55420-1196
   Toll free at 866-214-9807 (U.S. customers)
   Toll free at 866-214-9808 (Canadian customers)

Owner Responsibilities

You must maintain your Toro Product by following the maintenance procedures described in the *Operator's Manual*. Such routine maintenance, whether performed by a dealer or by you, is at your expense.

Items and Conditions Not Covered

There is no other express warranty except for special emission system coverage and engine warranty coverage on some products. This express warranty does not cover the following:

- Cost of regular maintenance service or parts, such as filters, fuel, lubricants, oil changes, spark plugs, air filters blade sharpening or worn blades, cable/linkage adjustments, or brake and clutch adjustments
- Any product or part which has been altered or misused and requires replacement or repair due to accidents or lack of proper maintenance
- Repairs necessary due to failure to use fresh fuel (less than one month old), or failure to properly prepare the unit prior to any period of non-use over one month
- Pickup and delivery charges
- Operational misuse, neglect, or accidents
- Repairs or attempted repairs by anyone other than an Authorized Toro Service Dealer
- Repairs or adjustments to correct starting difficulties due to the following:
  - failure to follow proper maintenance procedures
  - rotary mower blade striking an object
  - contaminants in the fuel system
  - improper fuel (consult your *Operator's Manual* if in doubt)
  - failure to drain the fuel system prior to any period of non-use over one month
- Special operational conditions where starting may require more than two pulls:
  - first time starts after extended period of non-use over three months or seasonal storage
  - cool temperature starts such as those found in early spring and late autumn
  - improper starting procedures - if you are having difficulty starting your unit, please check the *Operator's Manual* to ensure that you are using the correct starting procedures. This can save an unnecessary visit to an Authorized Toro Service Dealer.

General Conditions

All repairs covered by these warranties must be performed by an Authorized Toro Service Dealer using Toro-approved replacement parts. Repair by an Authorized Toro Service Dealer is your sole remedy under this warranty.

Neither The Toro Company nor Toro Warranty Company is liable for indirect, incidental, or consequential damages in connection with the use of the Toro Products covered by these warranties, including any cost or expense of providing substitute equipment or service during reasonable periods of malfunction or non-use pending completion of repairs under these warranties.

Some states do not allow exclusions of incidental or consequential damages, so the above exclusions may not apply to you.

This warranty gives you specific legal rights, and you may also have other rights which vary from state to state.

Countries Other than the United States or Canada

Customers who have purchased Toro products exported from the United States or Canada should contact their Toro Distributor (Dealer) to obtain guarantee policies for your country, province, or state. If for any reason you are dissatisfied with your Distributor's service or have difficulty obtaining guarantee information, contact the Toro importer. If all other remedies fail, you may contact us at Toro Warranty Company.

Australian Consumer Law: Australian customers will find details relating to the Australian Consumer Law either inside the box or at your local Toro Dealer.

*Residential purposes means use of the product on the same lot as your home. Use at more than one location, or institutional or rental use, is considered commercial use, and the commercial use warranty would apply.