FORM NO. 3314—584 Rev. B

TORO

PART NO. 83—5300

INSTALLATION INSTRUCTIONS

HIGH HEIGHT—OF—CUT KIT

Reelmaster 5100 & 223D 5 Blade Cutting Units

1. While loosening locknuts, unthread the capscrews from the top of rear H.O.C. brackets on cutting unit.

2. Remove the carriage bolts and locknuts securing rear H.O.C. brackets to cutting unit side plates.

3. Loosen set screws allowing rear roller to be removed from H.O.C. brackets.

4. Slide new rear H.O.C. brackets onto the bearing shafts on the rear roller. Do not tighten the set screws at this time.

5. Loosely secure new rear H.O.C. brackets to cutting unit sideplates with carriage bolts and locknuts previously removed.

6. Rethread the top capscrews into rear H.O.C. brackets.

7. Remove capscrews and locknuts securing front roller support to cutting unit sideplates.

8. Remove set screws allowing front roller to be removed from roller supports.

9. Install new roller supports to roller with set screws removed. Mount roller supports to roller as shown in figure 1.

10. Secure roller supports and roller to cutting unit sideplates with capscrews and locknuts previously removed. Apply medium strength blue Loctite #242 to the set screws securing the roller supports to the roller. Torque set screws to 25—30 ft.— lbs.

11. Level roller per instructions in Cutting Unit Operator's Manual.

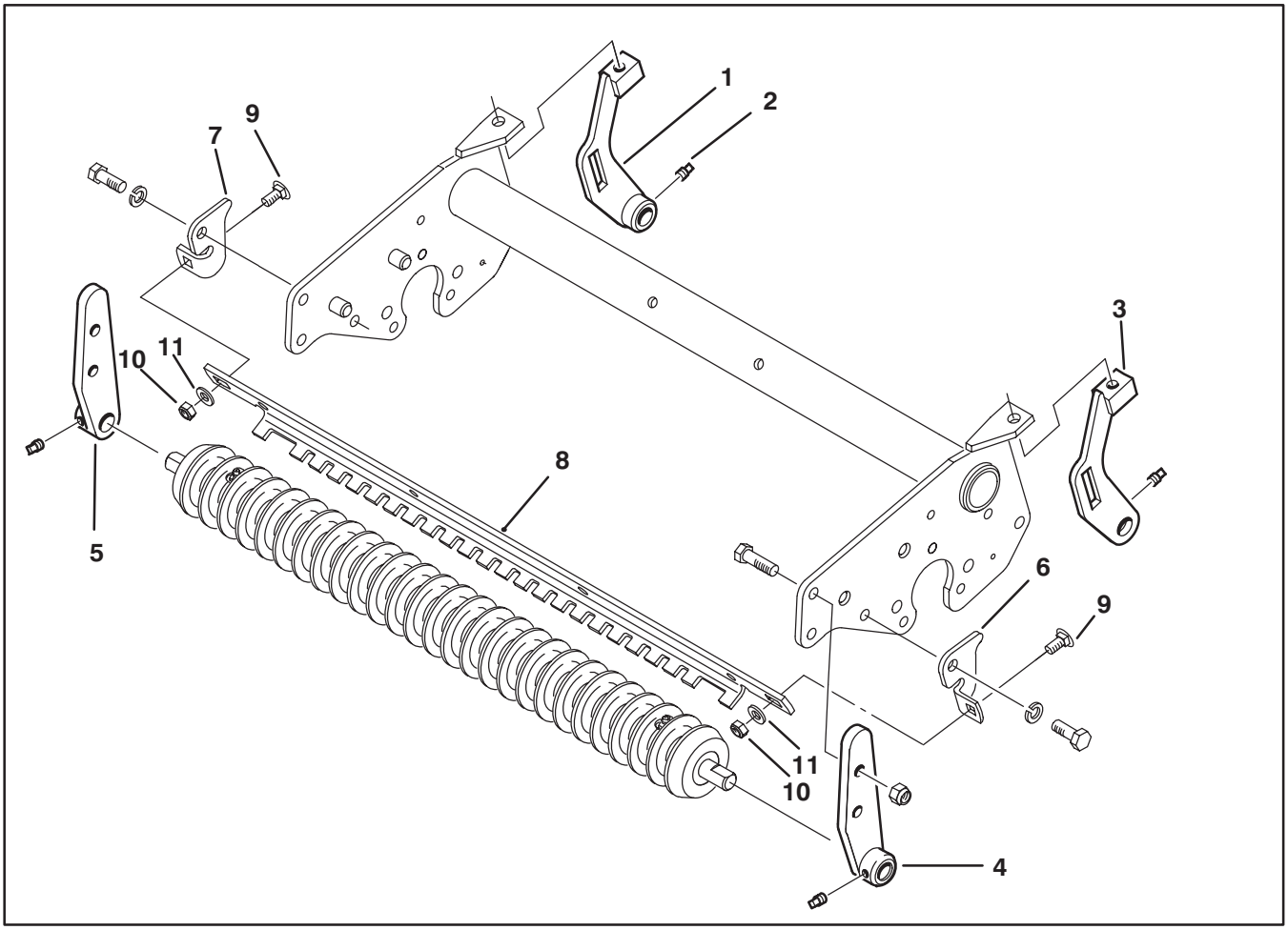

Figure 1

1. Right Rear H.O.C. bracket
2. Sq. Hd. Set Screw
3. Left Rear H.O.C. bracket
4. Left Front Support
5. Right Front Support

© The TORO Company —1991, Rev. 1992

12. Adjust rear H.O.C. brackets to the same height. Tighten carriage bolts securing rear H.O.C. brackets to cutting unit sideplates. Apply medium strength blue Loctite #242 to the set screws securing the H.O.C. brackets to the rear roller. Torque set screws to 25−30 ft.− lbs.

13. Adjust height−of−cut per instructions in Cutting Unit Operator's Manual.

14. Use the following chart to determine reel speed settings for use with the High Height−of−Cut kit.

IMPORTANT: High Height−of−Cut kit to be used only on 5 Blade Cutting units.

High Height−of−Cut Reel Speeds

The chart below shows the recommended reel speed settings for heights−of−cut above 5/8". Mowing speed is subject to turf conditions. Refer to Traction Unit Operator's Manual for instructions on setting reel speed.

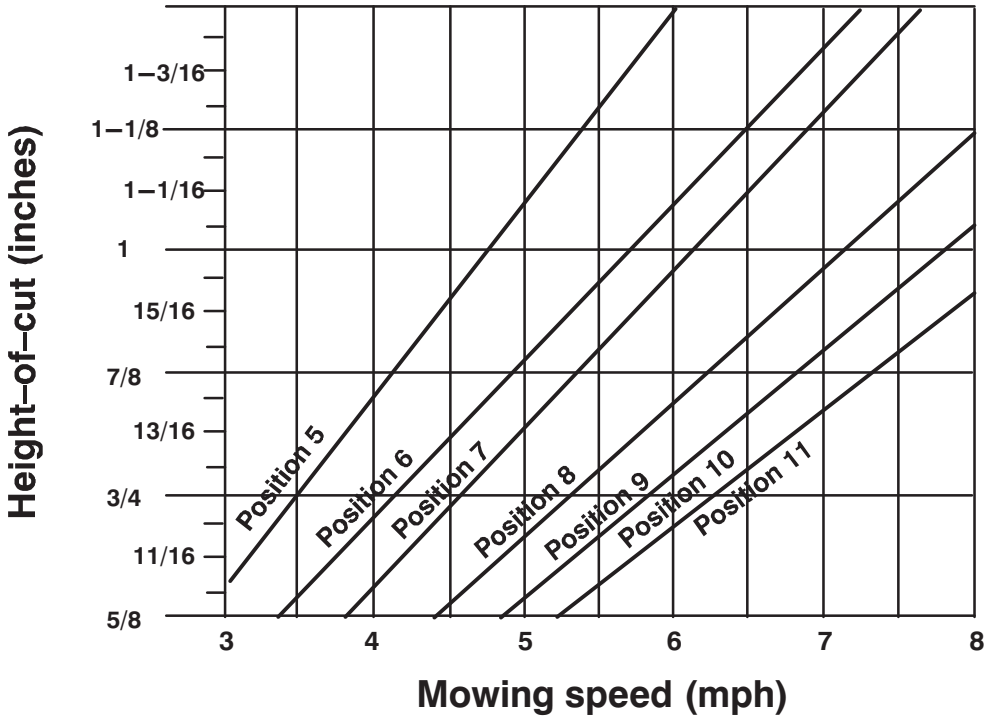

Note: Item numbers 6 thru 11 shown on figure 1, are not included in kit and are required to install a front roller scraper, when using the High Height−of−Cut Kit.

ITEM #	PART NO.	DESCRIPTION	QTY
6	83−4880	Bracket − High Scraper, LH	5
7	83−4870	Bracket − High Scraper, RH	5
8	82−6830	Bracket − Scraper	5
9	3230−1	Bolt − Carriage	10
10	3296−29	Nut − Lock	10
11	3256−23	Washer − Flat	10