FORM NO. 3319–525

TORO®

MODEL NO. 30580 – 70001 & UP

OPERATOR'S MANUAL

GROUNDSMASTER® 580–D
(TRACTION AND CUTTING UNITS)

To understand this product, and for safety and optimum performance, read this manual before starting the engine. Pay special attention to SAFETY INSTRUCTIONS highlighted by this symbol.



It means CAUTION, WARNING or DANGER – personal safety instruction. Failure to comply with the instruction may result in personal injury.

TORO
THIS UNIT CONFORMS TO ANSI B71.4–1990

The GROUNDSMASTER 580–D meets or exceeds the American National Standards Institute's safety standards for riding mowers; thus TORO proudly displays the ANSI safety seal.

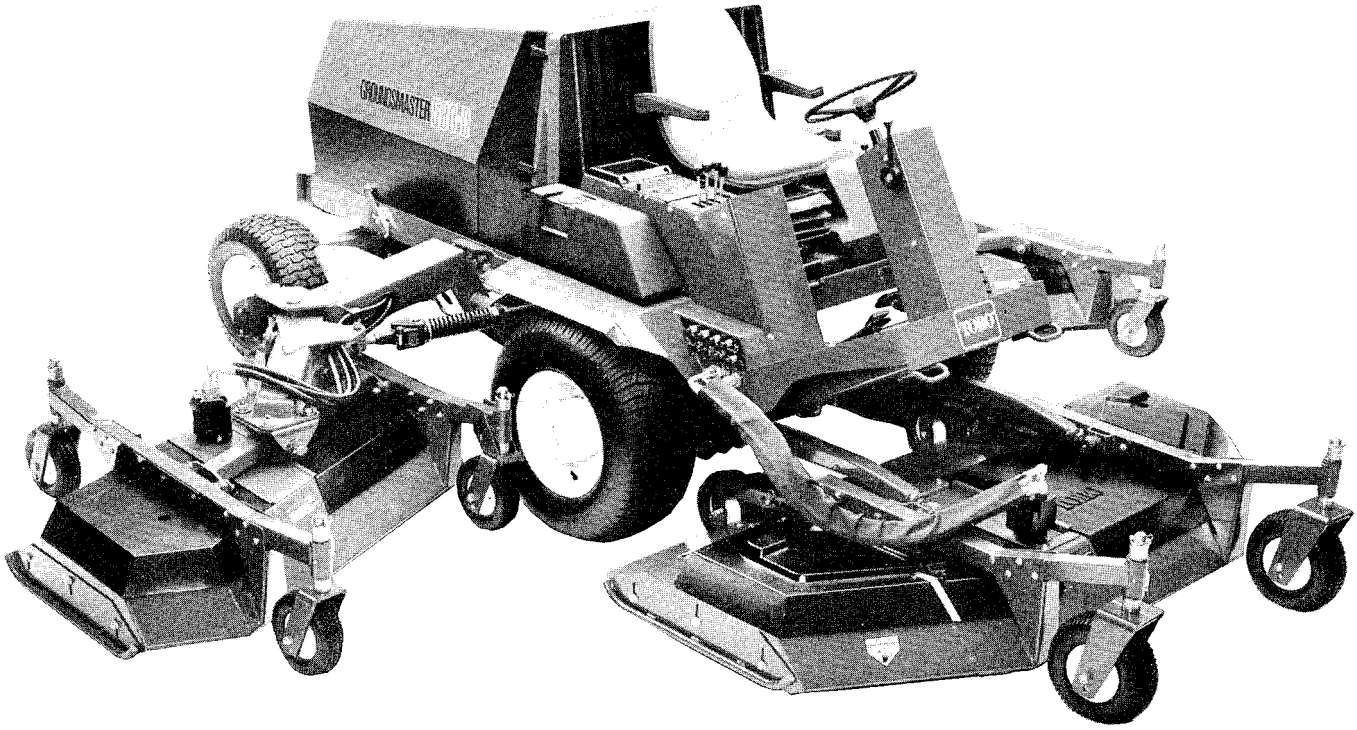

© The TORO COMPANY – 1997

FOREWORD

The Groundsmaster® 580–D was developed to satisfy the demand for a large scale rotary mower that combines the productivity of a 16–foot mowing machine with the handling ease of a trim mower. The Groundsmaster 580–D has advanced concepts in engineering and design, and if properly maintained, will provide excellent service.

Since the Groundsmaster 580–D is a high quality product, TORO is concerned about its future use and safety of the user. Therefore, anyone involved with the product, including the operator, should read and understand this manual. Major sections are:

- **Safety Instructions**
- **Specifications**
- **Before Operating**
- **Controls**
- **Operating Instructions**
- **Maintenance**

This manual emphasizes safety, mechanical and general product information. DANGER, WARNING and CAUTION identify safety messages. Whenever the triangular safety alert symbol appears, understand the safety message that follows. For complete safety instructions, read pages 3 – 7. IMPORTANT highlights special mechanical information and NOTE emphasizes general product information worthy of special attention.

⚠ WARNING: ⚠

Diesel engine exhaust and some of its constituents are known to the State of California to cause cancer, birth defects, or other reproductive harm.

SPARK ARRESTER

In some places a spark arrester muffler must be used because of local, state or federal regulations. Since the engine on the Groundsmaster 580–D is fitted with a turbo–charger as standard equipment, it meets the spark arrestor standards of the United States Department of Agriculture, the United States Forestry and Section 4442, Public Resources Code of the State of California.

SERVICE MANUAL

The Groundsmaster® 580–D Service Manual contains information for troubleshooting, testing and repair of the hydraulic system, brakes and cutting units for the Groundsmaster® 580–D. To order this publication, contact your local authorized Toro Distributor. Ask for Form 90–743–SL, Groundsmaster® 580–D Service Manual.

MITSUBISHI S4F–T DIESEL ENGINE MANUAL ORDERING INFORMATION:

IN THE U.S.:
Contact Mitsubishi Engine North America Technical Publications Department. 610 Supreme Drive Bensenville, IL. 60106

OUTSIDE THE U.S.:
Contact your local Mitsubishi Engine Distributor (or Your Authorized Toro Distributor).

Whenever you have questions or need service, contact your local authorized Toro Distributor. In addition to having a complete line of accessories and professional turf care service technicians, the distributor has a complete line of genuine TORO replacement parts to keep your machine operating properly. Keep your TORO all TORO. Buy genuine TORO parts and accessories.

TABLE OF CONTENTS

SAFETY INSTRUCTIONS 3–4
SAFETY AND INSTRUCTION DECALS 5–7
SPECIFICATIONS 7–9
LOOSE PARTS 9
BEFORE OPERATING 10–13
CONTROLS 14–16
OPERATING INSTRUCTIONS 17–24
LUBRICATION 25
DAILY MAINTENANCE CHECKLIST 26
MAINTENANCE 27–41
- Engine Oil and Filter 27
- Engine Fuel System 28
- Engine Cooling System 29
- Air Cleaner Maintenance 30
- Hydraulic System Service 31
- Planetary Gear Drive Service 33
- Battery Service 34
- Fuses and Circuit Breaker 34
- Brake System Service 35
- Wheels and Tires 35
- Cutting Unit Lubrication 35
- Blade Maintenance 36
- Blade Bolt Torque 37
- Removing Cutting Unit Blades 37
- Inspecting and Sharpening Blade 37
- Adjusting Cutting Unit Belt Tension 38
- Replacing Blade Drive Belts 39
- Separating Cutting Units from Traction Unit .. 39
- Checking and Correcting Cutting Unit Blade Mismatch 40
- Adjusting Winglet Stabilizers 41
- Traction Control Neutral Adjustment 41
- Traction (Neutral) Switch Adjustment 41
- Traction Control Rod Adjustment 42
- Cylinder Head Bolts 42
- Engine Valve Clearance 42

ELECTRICAL SCHEMATICS 43–44
HYDRAULIC SCHEMATIC 45
MAINTENANCE SCHEDULE 46
PRODUCT IDENTIFICATION 47
THE TORO PROMISE ..... Back Cover

SAFETY INSTRUCTIONS

Improper use or maintenance by the operator or owner of the machine can result in injury. Reduce the potential for any injury by complying with the following safety instructions.

BEFORE OPERATING

1. Read and understand the contents of this manual before operating the machine. To get replacement manuals, send complete model and serial number to:

The Toro Company
8111 Lyndale Avenue South
Bloomington, MN 55420–1196.

2. Never allow children to operate the machine or adults to operate it without proper instruction.

3. Become familiar with the controls and know how to stop the machine and engine quickly.

4. Keep all shields, safety devices and decals in place. If a shield, safety device or decal is malfunctioning, illegible or damaged, repair or replace it before operating the machine.

5. Always wear substantial shoes. Do not operate machine while wearing sandals, tennis shoes, sneakers or when barefoot. Do not wear loose fitting clothing that could get caught in moving parts and possibly cause personal injury.

6. Wearing safety glasses, safety shoes, long pants and a helmet is advisable and required by some local ordinances and insurance regulations.

7. Make sure the work area is clear of objects which might be picked up and thrown by the cutter blades.

8. Do not carry passengers on the machine. Keep everyone, especially children and pets, away from the areas of operation.

9. Since diesel fuel is highly flammable, handle it carefully:

A. Use an approved fuel container.

B. Do not remove fuel tank cap while engine is hot or running.

C. Do not smoke while handling fuel.

D. Fill fuel tank outdoors and only to within an inch (25 mm) from the top of the tank, not the filler neck. Do not overfill.

E. Wipe up any spilled fuel.

10. Be sure interlock switches are adjusted correctly so engine cannot be started unless traction pedal is released – neutral position – and PTO switch is in NEUTRAL position.

WHILE OPERATING

11. Check interlock switches daily for proper operation. If a switch malfunctions, replace or adjust it before operating the machine. The interlock system is for your protection, so do not bypass it. Replace all interlock switches every two years.

12. Do not run engine in a confined area without adequate ventilation. Exhaust is hazardous and could be deadly.

13. Sit on the seat when starting and operating the machine.

14. Before starting the engine each day, test warning lamps and signal lights to assure proper operation.

SAFETY INSTRUCTIONS

15. Pay attention when using the machine. To prevent loss of control:

A. Mow only in daylight or when there is good artificial light.

B. Watch for holes or other hidden hazards.

C. Be extremely careful when operating close to sand traps, ditches, creeks, steep hillsides or other hazards.

D. Reduce speed when making sharp turns. Avoid sudden stops and starts.

E. Look to the rear to assure no one is behind the machine before backing up.

F. Watch for traffic when near or crossing roads. Always yield the right-of-way.

G. Reduce speed when driving downhill.

16. Keep hands, feet and clothing away from moving parts and the cutting units.

17. This product may exceed noise levels of 85 dB(A) at the operator position. Ear protectors are recommended, for prolonged exposure, to reduce the potential of permanent hearing damage.

18. Do not touch engine, turbo-charger, radiator, muffler or exhaust pipe while engine is running or soon after it is stopped. These areas could be hot enough to cause burns.

19. Before getting off the seat:

A. Move traction pedal to neutral.

B. Set parking brake.

C. Disengage cutting units and wait for blades to stop.

D. Stop engine and remove key from switch.

E. Do not park on slopes unless wheels are chocked or blocked.

20. If a cutting blade strikes a solid object or vibrates abnormally, stop immediately, turn engine off, set parking brake and wait for all motion to stop. Inspect for damage. Repair or replace any damaged parts before operating.

MAINTENANCE

21. Before servicing or making adjustments, stop engine and remove key from the switch.

22. Assure entire machine is properly maintained and in good operating condition. Frequently check all nuts, bolts and screws.

23. Frequently check all hydraulic line connectors and fittings. Assure all hydraulic hoses and lines are in good condition before applying pressure to the system.

24. If the Groundsmaster 580-D loses power and needs to be moved, either by-pass the hydraulic pump or unlock the front wheel hubs. Unlocking the front wheels disables the machine braking system. Block the wheels before unlocking the hubs to keep the machine from moving. To tow the machine, connect to the towing vehicle with a rigid towing device. Do not use chains, cables or other non-rigid devices for towing. Lock the hubs when towing is completed.

25. Keep body and hands away from pin hole leaks or nozzles that eject high pressure hydraulic fluid. Use cardboard or paper to find hydraulic leaks. Hydraulic fluid escaping under pressure can penetrate skin and cause injury. Fluid accidentally injected into the skin must be surgically removed within a few hours by a doctor or gangrene may occur.

26. Before any hydraulic system maintenance, stop engine and lower cutting units to the ground so all pressure is relieved.

27. For major repairs or other assistance, contact your local Toro Distributor.

28. To reduce potential fire hazard, keep engine area free of excessive grease, grass, leaves and dirt.

29. If engine must be running to perform maintenance or an adjustment, keep hands, feet, clothing and other parts of the body away from cutting units and other moving parts. Keep everyone away.

30. Do not overspeed the engine by changing governor setting. Maximum engine speed is 2750 rpm. To assure safety and accuracy, have an Authorized Toro Distributor check maximum engine speed.

31. Shut engine off before checking or adding oil to the crankcase.

32. Disconnect battery before servicing the machine. If battery voltage is required for troubleshooting or test procedures, temporarily connect the battery.

33. For optimum performance and safety, use genuine Toro replacement parts and accessories. Replacement parts and accessories made by other manufacturers could be dangerous and may void the product warranty of The Toro Company.

SAFETY AND INSTRUCTION DECALS

The following decals are installed on the machine. If any become damaged or illegible, replace it. The decal part number is listed below and in your parts catalog. Replacement decals can be ordered from your Authorized Toro Distributor.

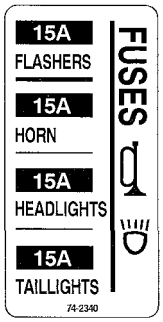

UNDER LOWER CONTROL COVER
(Part No. 74–2340)



ON REAR FENDER AND FRONT FRAME
(Part No. 72–4080)

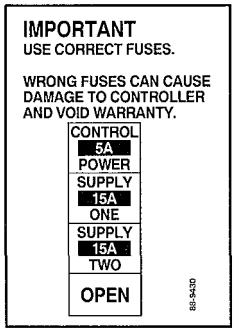

UNDER LOWER CONTROL COVER
(Part No. 88–9430)

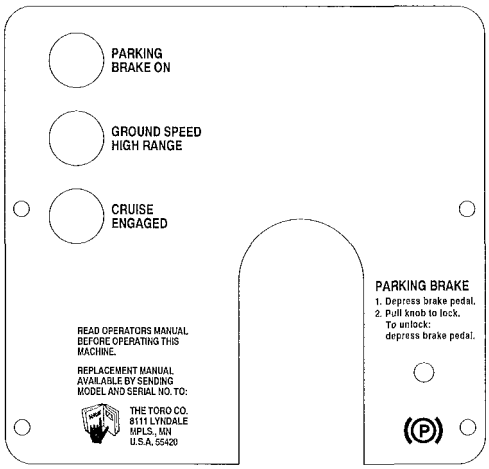

ON STEERING COLUMN SUPPORT
(Part No. 69–0970)



ON CUTTING UNITS, UNDER COVERS
(Part No. 67–5360)

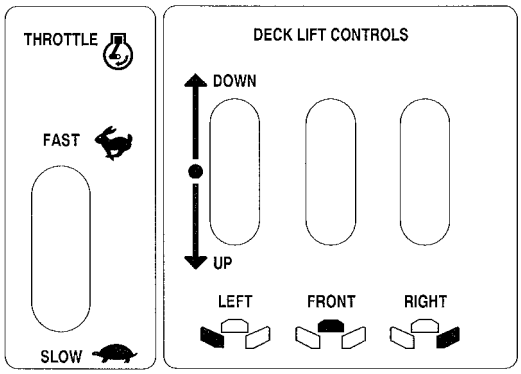

ON CENTER CONTROL PANEL
(Part No. 69–0980)

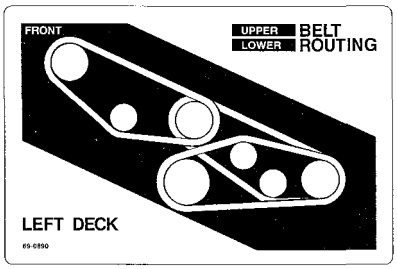

ON DECK, UNDER COVER
(Part No. 69–0890)

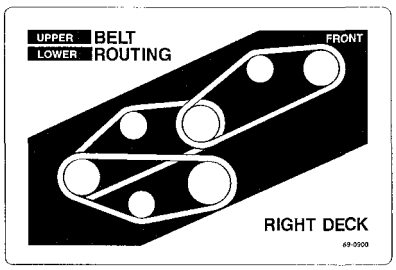

ON DECK, UNDER COVER
(Part No. 69–0900)

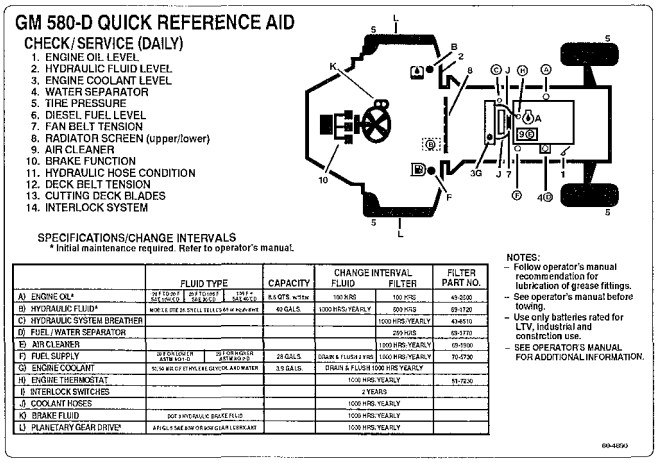

ON RIGHT SIDE OF SEAT
(Part No. 80–4890)

SAFETY AND INSTRUCTION DECALS

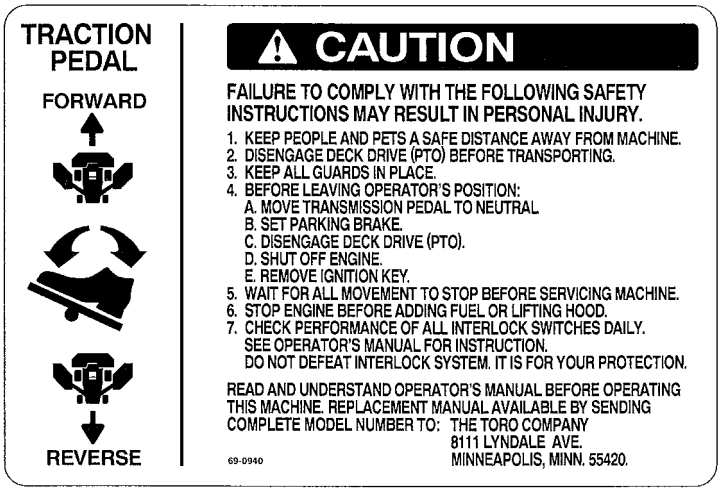

ON FLOOR, FORWARD OF TRACTION PEDAL
(Part No. 69–0940)



ON FENDER ALONGSIDE HYDRAULIC TANK
(Part No. 69–0920)



ON FAN SHROUD
(Part No. 76–8750)

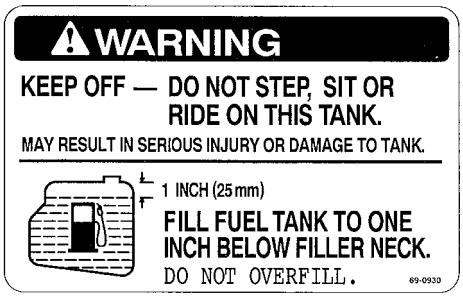

ON FENDER ALONGSIDE FUEL TANK
(Part No. 69–0930)

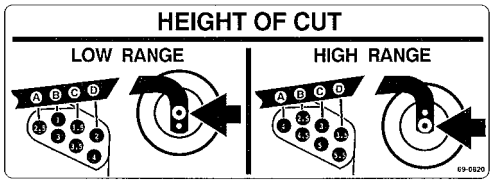

ON LEFT REAR OF CUTTING UNIT
(Part No. 69–0820)

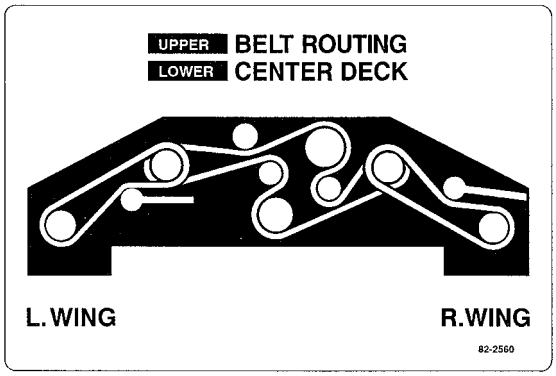

ON DECK, UNDER COVER
(Part No. 82–2560)

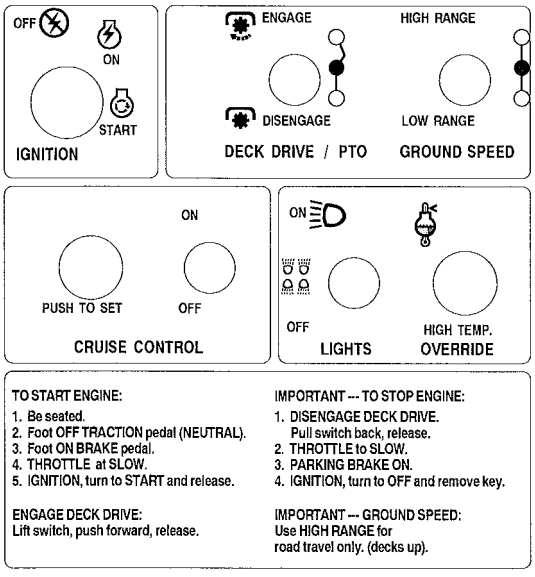

ON LOWER CONTROL PANEL
(Part No. 69–0990)



ON FRONT OF CUTTING UNITS
(Part No. 43–8480)

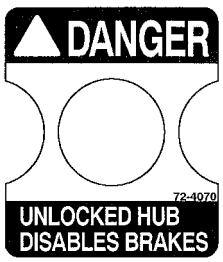

ON BOTH WHEEL HUBS
(Part No. 72–4070)

SAFETY AND INSTRUCTION DECALS

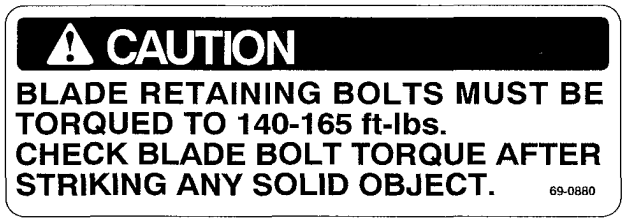

ON CUTTING UNIT CASTOR ARMS
(Part No. 69-0880)



ON CUTTING UNITS
(Part No. 66-1340)

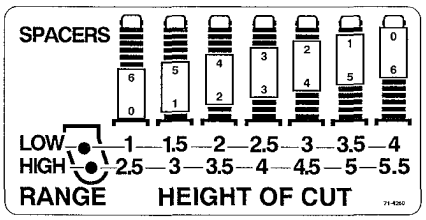

ON FRONT AND REAR CUTTING
UNITS MOTOR MOUNT PLATES
(Part No. 71-4260)

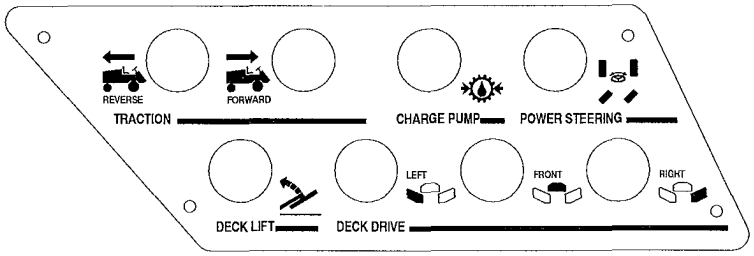

RIGHT SIDE NEAR TEST PORTS
(Part No. 69-0960)

SPECIFICATIONS

TRACTION UNIT

Engine: Mitsubishi, Model S4F-T 4 cycle, four cylinder, over-head valve, 180.4 cu. in. (2956 cc) displacement, water cooled diesel. Rated 80 hp @ 2750 rpm. 17:1 compression ratio, direct injected and turbo-charged. Crankcase capacity: 8.5 qt (8 l) w/filter.

Air Cleaner: Heavy duty, centrifugal air type w/replaceable element.

Cooling System: Radiator w/wide-spaced fins (5 per in.). Variable speed fan controlled by engine temperature. Full flow hydraulic oil cooler (7 fins/in.). Coolant capacity 3.9 gal (14.7 l) of 50/50 mixture of ethylene glycol and water.

Fuel System: Fuel tank capacity: 28 gal (106 l) of No. 2 diesel fuel.

Electrical: 12 volt automotive type system. Dual maintenance free batteries w/1300 Amp cold cranking power at 0° F (18° C). 35 Amp alternator with integral regulator.

Controls: Individual deck lift levers, High Range/Low Range ground speed selector, PTO and ignition switches. Hand throttle, ON/OFF cruise control switch and cruise engage button. Single implement shut-off, steering tower and wheel tilt lever and service brake pedal. Foot operated traction pedal and steering brake pedals with parking brake latch.

Warning Systems: Indicator lights and audible signals warn of:
Low engine oil pressure.
High water temperature.
No charge.
Water in fuel.
Low hydraulic oil level.
High hydraulic oil temperature.
Air cleaner clogged.
Hydraulic oil filter needs service.

Indicator lights alone indicate:
Parking brake on.
Cruise control is engaged.
Groundsmaster 580-D is in High Range ground speed mode.

Interlock System: Prevents engine starting if traction pedal is out of neutral. Stops engine if operator either leaves seat or parking brake on with traction pedal out of neutral. Prevents PTO engagement if operator is out of seat, engine is off, or all cutting units are raised. Prevents engagement of High Range ground speed mode if a cutting unit is lowered, front cutting unit is not fully raised or if engine is shut off.

Steering: 15-1/2 in. (39 cm) patented tilt steering wheel and tower, released and locked by single control lever. Dual hydraulic cylinder power steering for extra sharp turning.

SPECIFICATIONS

Seat and Storage: Deluxe seat w/armrests, backrest and suspension. Adjustable fore and aft travel, weight and height. Tool storage tray under hinged floor plate; storage and beverage holder alongside control panel.

Brakes: Enclosed, multiple front hydraulic disc brakes operated by right foot pedal. Mechanical steering brakes via two pedals which lock together for parking brake function. Dynamic braking through closed–loop hydrostatic drive.

Tires/Wheels:
Front – two 31 x 12.50–15, 8–ply high floatation turf tires w/tubes.
Rear – two 23 x 10.50–12, 6 ply tubeless turf tire.

Ground Speed: Infinitely variable.
Forward Speeds – Low; 0–7.5 mph (12.1 km/h). High; 0–20 mph (32.2 km/h).
Reverse Speeds – Low; 0–3 mph (4.8 km/h). High; 0–8 mph (12.9 km/h).

Ground Clearance: 8 in. (20.3 cm).

Hydraulic Oil System and Reservoir: 40 gal (151 l) total system capacity. Reservoir capacity: 32 gal (121 l). Replaceable spin–on 5 micron filter element.

Traction System: Hydrostatic closed loop system driving gear reduction wheel drives. Has bypass valve for towing. Adjustable foot pedal with speed stop controls forward/reverse ground speed. Switch engaged cruise control, disengaged by service brake or ON/OFF switch. Cruise speed changeable without disengagement.

Machine Fluid Recommendations:
Engine Oil: API Service Classification CD (see Before Operating or Lubrication section for oil grade recommendations).
Diesel Fuel: ASTM No. 2–D
Cooling System: 50/50 mix; Water & Ethylene Glycol
Hydraulic Oil (Recommended brands):

Mobil	DTE 26
Shell	Tellus 68
Amoco	Rykon Oil #68
Conoco	Super Hydraulic Oil 68
Exxon	Nuto H 68
Kendall	Kenoil R & O AW 68
Pennzoil	Penreco 68
Phillips	Magnus A 68
Standard	Energol HLP 68
Sun	Sunvis 831 WR
Union	Unax AW 68

Note: All are interchangeable.

IMPORTANT: Use only hydraulic oils specified. Other fluids could cause system damage.

Note: A red dye additive for the hydraulic system oil is available in 2/3 oz (20 ml) bottles. One bottle is sufficient for 4–6 gal (15–23 l) of hydraulic oil. Order Part No. 44–2500 from your Authorized Toro Distributor.

CUTTING UNITS

Cutting Unit Drive System: All hydraulic drive. Initial cutting drive engagement via electric switch. Drive shuts off or engages individually as cutting units are raised or lowered.

Automatic Weight Transfer: Patented automatic weight transfer from decks to traction unit under demanding traction situations for improved traction and deck floatation.

Cutting Unit Configuration: A 92 in. (234 cm) Triflex front center cutting unit and two 57 in. (145 cm) outboard cutting units.

Mowing Rate/Width: Mows up to 14–1/2 acres/hr (5.9 hectares at 7.5 mph (12.1 km/hr) using all cutting units (assumes no overlap and stops).

Total cutting width: 192 in. (488 cm).

Height–of–Cut Range:
Low – 1–4 in. (2.5–10.2 cm).
High – 2–1/2 – 5–1/2 in. (6.3–14 cm).

Blades: Interchangeable heat treated steel blades, 20 in. (50.8 cm) long, 1/4 in.(6.3 mm) thick and 2–1/2 in. (6.3 cm) wide. 5 blades on Triflex and 3 each on outboard units.

Anti–scalp Devices: Cutting units equipped with adjustable skids. Anti–scalp cup on each blade assembly.

TRIFLEX CUTTING UNIT (FRONT)

Type: Triflex front mounted rotary cutting unit with 5 blade spindles and 92 in. (234 cm) width of cut.

Trimming Ability: Trims to either side. 8 in. (20.3 cm) cutting unit offset from outside of wheel to trim side of front cutting unit on either side.

Height–of–Cut Adjustment: 1/2 in. (12.7 mm) increments by spacers on front castor shafts and clevis pins on rear wheel forks.

Cutter Drive: Hydraulic gear motor. "BB" hex section belt to center cutting unit spindles, "B" section belt to wings. Splined shafts, each in two greaseable, tapered roller bearings in cast iron housings (greaseable from the top). Self tensioning and permanently lubricated belt idlers.

Castor Wheels: Two 10.50 x 3.50 and two 13 x 5.00 heavy duty, pneumatic castor wheels.

OUTBOARD CUTTING UNITS

Type: Two, three spindle, side mounted rotary cutting units each with a 57 in. (145 cm) width of cut.

Trimming Ability: Trims to either side. 58 in. (147cm) cutting unit offset from outside of wheel to trim side of side cutting unit on either side.

SPECIFICATIONS

Height–of–Cut Adjustment: 1/2 in. (12.7 mm) increments by spacers on all castor shafts.

Cutter Drive: Hydraulic gear motor. Three "B" section belts to spindles

Castor Wheels: Four 10.50 x 3.50 heavy duty, interchangeable, pneumatic castor wheels.

Cutting Unit Suspension: Outboard cutting unit arms pivot from center, sweep cutting units forward in mow and lift, and rotate cutting units down and back in transport. Arms have rubber mount design for shock absorption and more cutting unit floatation (patented). Adjustable, spring–loaded, breakaway arms release and rotate outboard cutting unit upon accidental impact. Automatically reset when cutting unit is raised. Cam lock links automatically secure outboard cutting units in transport position.

Machine Width (Approx.):
Transport – 7 ft,11 in. (241 cm).
Mow – 16 ft, 3 in.(495 cm).

Machine Height (Approx.):

Transport – 7 ft, 7 in. (231 cm) – to top of raised cutting units.

Mow – 4 ft,11 in.(152 cm) – to top of seat back.

Machine Overall Length (Approx.): 14 ft(427 cm).

Total Weight (with fluids) [Approx.]: 6540 lb (2967 kg).

Accessories:
2–Post Roll Over Protection System
Canopy option
Canopy w/ windshield option
Cab with Roll Over Protection System
Road Light Package
8 ft (244 cm) Rotary Broom
Air Conditioning
7 Foot Snow blower
Leaf Mulcher
Cold Start Kit
Foam Filled Castor Tires
Extra Traction Drive Tire

Specifications and design subject to change without notice.

LOOSE PARTS

Note: Use this chart as a checklist to ensure all parts have been shipped.

DESCRIPTION	QTY.	USE
Deck Tilt Link	1	To secure front cutting unit in vertical position for service. (Shipped in tool box)
Klik Pin	2	Used with Deck Tilt Link. (Shipped installed)
Operator's Manual	2	Read and understand before operating machine.
Parts Catalog	1	
Registration Card	1	Fill Out and Return to Toro.(Shipped in tool box)

BEFORE OPERATING

CAUTION

Wear safety goggles and rubber gloves when working with batteries. Charge batteries in a well–ventilated place so gases produced while charging can dissipate. Since the gases are explosive, keep electrical spark and open flame away from batteries. Do not smoke. Nausea may result if the gases are inhaled. Unplug charger from electrical outlet before connecting to or disconnecting charger leads from battery posts.

CHECK BATTERIES (Initial preparation)

1. Unlatch the hood and left hand engine side panel (Fig. 1). Raise and prop hood open and remove the left side panel. Make sure hood prop is secured in one of the mounting brackets on hood.

2. Remove the capscrews securing the battery tray and slide the tray out (Fig. 2).

3. Check both batteries for charge with a hydrometer. If batteries check acceptably, slide tray back in place, secure with capscrews and lockwashers and install side panel. If batteries require charging, proceed to step 4.

4. Remove negative (–) battery cables from batteries (Fig. 2). Connect a 3 to 4 Amp battery charger to the posts. Charge the batteries at a rate of 3 to 4 Amperes for 4 to 8 hours.

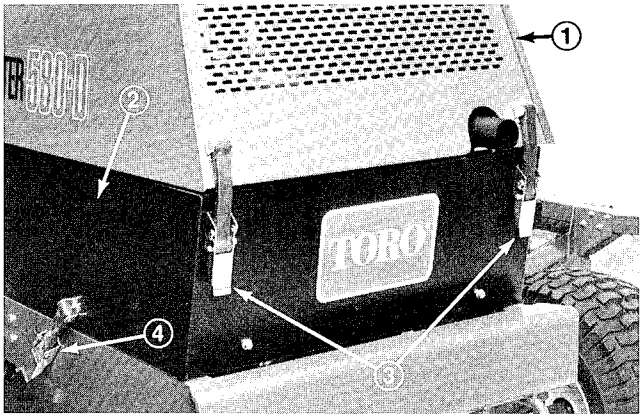

Figure 1

1. Engine Hood
2. Left Side Panel
3. Hood Latches
4. Side Panel Latch

5. When batteries are fully charged, disconnect charger from electrical outlet and battery posts.

6. Install negative (–) cable ends, slide tray back in place, secure with capscrews and install side panel.

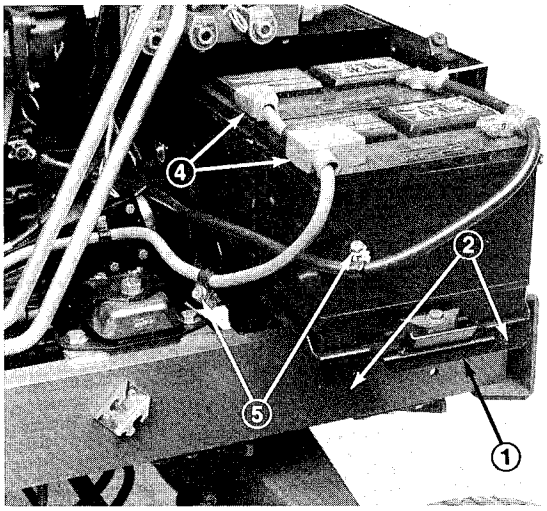

Figure 2

1. Battery Tray
2. Tray Mounting Holes
3. Negative (–) Connections
4. Positive (+) Connections
5. Battery Tray Mounting Screws

CHECK ENGINE OIL (DAILY)

The engine is shipped with 8.5 qt(8.0 l) of oil in the crankcase. However, check level of oil before and after the engine is first started.

1. Be sure machine is positioned on a level surface.

2. Unlatch hood and raise and prop it open (Fig. 1). Make sure hood prop is secured in one of the mounting brackets on hood.

3. Remove dipstick, wipe with a clean rag (Fig. 3) and insert in tube until it is fully seated. Remove from tube and check oil level. If oil level is low, remove filler cap (Fig. 4). Add oil until level is to top notch on dipstick (Fig. 3). **DO NOT OVERFILL.**

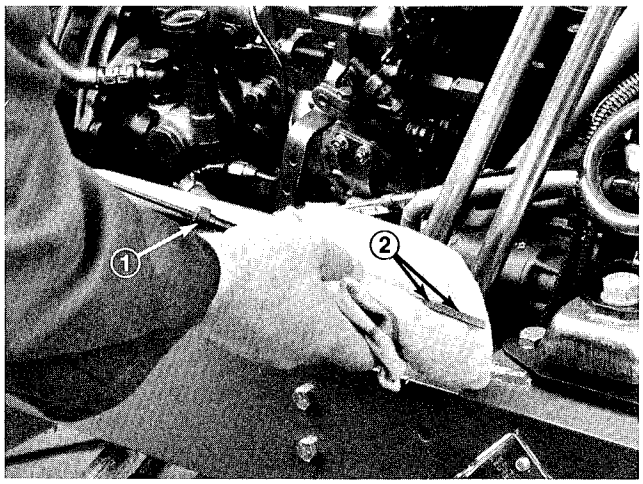

Figure 3

1. Dipstick
2. Keep Oil Level Between Marks

4. The engine uses any high quality detergent oil having the American Petroleum Institute – API – "service classification" CD. Oil viscosity recommendations are:

AMBIENT TEMPERATURE	PROPER VISCOSITY
−20° to 20° F (−28.9° to −6.7° C)	SAE 10
20° to 105° F (−6.7° to 40.6° C)	SAE 30
105° F (40.6° C) and up	SAE 40

Note: Do not use multi−viscosity oils.

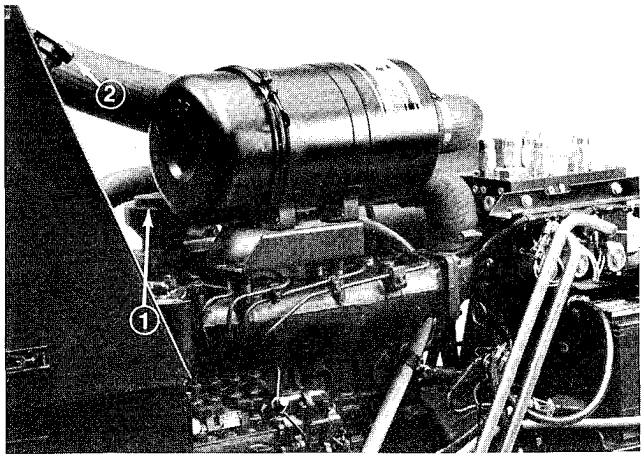

Figure 4
1. Engine Oil Fill Cap 2. Radiator Cap

IMPORTANT: Check oil after every 5 hours operation or daily. Change oil and filter after the first 50 hours, then change both every 100 hours operation thereafter. Change oil and filter more frequently when engine is operated in extremely dusty or dirty conditions.

5. Insert dipstick into tube and close and latch hood.

CHECK COOLING SYSTEM (DAILY)

The cooling system is filled with a 50/50 solution of water and permanent ethylene glycol anti−freeze. Check coolant level at beginning of each day before starting the engine. Capacity of cooling system is approximately 3.9 gal (14.7 l).

CAUTION

The best time to check coolant level is each day before the engine has been started because coolant system has not been pressurized. When the engine is hot and the radiator cap is removed, pressurized coolant can escape and cause burns. If engine coolant is hot, slowly and carefully remove radiator cap.

1. Unlatch, raise and prop hood open. Make sure hood prop is secured in one of the mounting brackets on hood.

2. Remove radiator cap (Fig.4). Level of coolant must be above the radiator core and about 1 in. (25 mm) below bottom of filler neck.

3. If coolant level is low, add a 50/50 mixture of water and ethylene glycol anti−freeze. **DO NOT USE ALCOHOL/METHANOL BASE COOLANTS OR WATER ONLY. DO NOT OVERFILL.**

4. Install radiator cap, close and latch the hood.

CHECK HYDRAULIC SYSTEM FLUID (DAILY)

1. Fluid level should be checked daily through sight glass at rear of hydraulic reservoir (Fig. 5). When oil is cold, level will be slightly below center, but should be in the middle of the sight glass when the oil is warm.

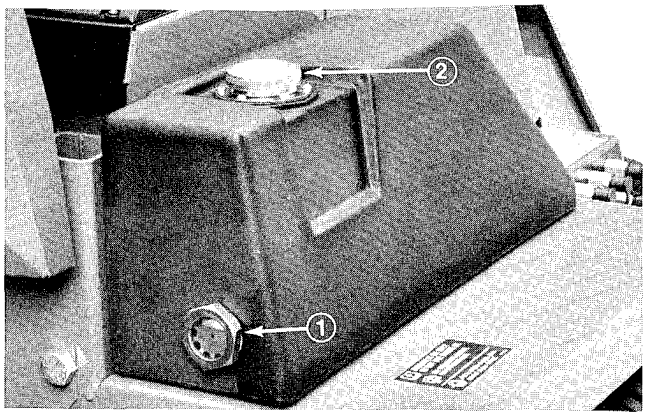

Figure 5
1. Hydraulic Oil Level Sight Glass 2. Reservoir Fill Cap

2. If oil level is low, add hydraulic oil to the reservoir (Fig. 5); refer to Machine Fluid Recommendations, page 8.

FILL FUEL TANK

CAUTION

Because diesel fuel is flammable, use caution when storing or handling it. Do not smoke while filling the fuel tank. Do not fill the tank while engine is running, hot, or when machine is in an enclosed area. Always fill fuel tank outside and wipe up spilled fuel before starting the engine. Store fuel in a clean, safety approved container and keep cap in place. Use diesel fuel for the engine only; not for any other purpose.

1. Remove fuel tank cap (Fig. 6).

2. Fill tank to about one inch (25 mm) below bottom of filler neck with No. 2 diesel fuel. Install cap.

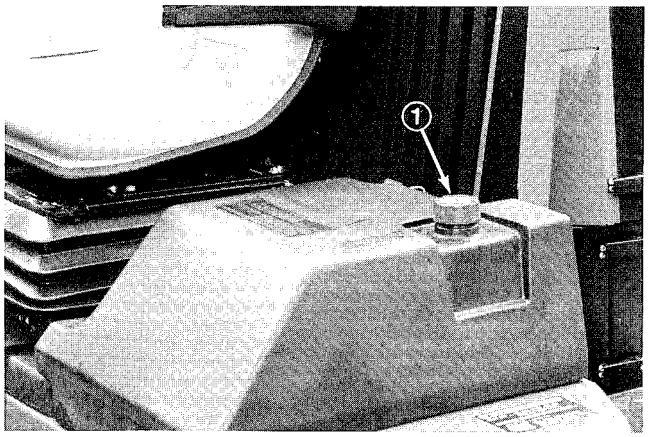

Figure 6
1. Fuel Tank Cap

CHECK TIRE PRESSURE (DAILY)

Since the Groundsmaster 580−D can be operated under many different types of turf conditions, proper tire pressure is very important. Use the following as a guide:

Under **Normal** mowing conditions and when used on a wide variety of turf grasses − 15 psi (103.4 kPa) front; 13 psi (89.6 kPa) rear.

When turf is **wet** and softer than normal − use low pressure: 12 psi (82.7 kPa) front and 9 psi (62 kPa) rear.

When turf is **dry** and harder than normal, use higher tire pressure: 18 psi (124 kPa) front and rear.

IMPORTANT: Do not operate in HIGH RANGE for extended periods when tire pressure is less than 18 psi because tires may be damaged. When tire pressure exceeds 18 psi, HIGH RANGE may be used.

CHECK SYSTEMS OPERATION (DAILY)

Start engine. Move the Groundsmaster 580−D, slowly, to an area where the machine can be checked for proper function. Check operation of controls, safety interlock system, engine, hydraulic system, brakes and cutting units. Refer to Know Your Controls and Operating Instructions sections for proper procedures.

CHECKING CUTTING UNIT MISMATCH

To assure all cutting units are at the same height−of−cut:

1. Adjust all cutting units to the highest height−of−cut. Position all castor arm height−of−cut spacers to on the underside of the castor arms. Do not move washers. Leave them in their original position.

Note: Unless all castor wheel axles are not in the same location, axles do not have to be relocated. All, however must be in the same holes (Fig.7).

2. Place a flat 4'x8' sheet of 3/4" plywood on a level surface and lower a cutting unit onto the plywood.

3. Taking each cutting blade in turn, position blade so it faces fore and aft. Measure from plywood to front tip of cutter blade and record dimension. All blade heights on same deck should be within 1/4" (6.3 mm) of one another. If blade heights meet criteria, proceed to step 5. If blade heights are not within 1/4" (6.3 mm), proceed to step 4.

4. To match cutting blade height, transfer washers from one side of a castor wheel arm to the other. If end is to be lowered, transfer one or both washers from the underside to the top. By contrast, if end is to be raised, transfer washer(s) from the top to the underside. Each washer is 1/8" (3 mm) thick. Repeat measurement of blade tip height and record new dimensions.

5. Repeat steps 2−3 on remaining cutting units, and step 4, if necessary. If washers are transferred on a outboard cutting unit castor arm, be sure to transfer the same number on both ends of the castor arm.

6. Compare blade height dimensions of all cutting units. Blade heights must be within 3/8" (9.5 mm) of one another. If they are not, determine which cutting unit height can be changed to compensate for difference and either transfer washers from bottom to top to lower unit, or from top to bottom to raise. Transfer an equal number of washers at all castor wheel locations to keep cutting unit level − two on front unit, four on outboard units.

ADJUSTING HEIGHT−OF−CUT

The height−of−cut is adjustable from 1 to 5−1/2 in.(25 to 140 mm) in 1/2 in.(13 mm) increments. Positioning the castor wheel axles in the top holes of the castor forks (Fig. 7) allows Low range height−of−cut settings from 1 to 4 in. (25 to 102 mm); positioning the castor wheel axles in the lower holes of the castor forks (Fig. 7) allows High range height−of−cut settings from 2−1/2 to 5−1/2 in. (63.5 to 140 mm).

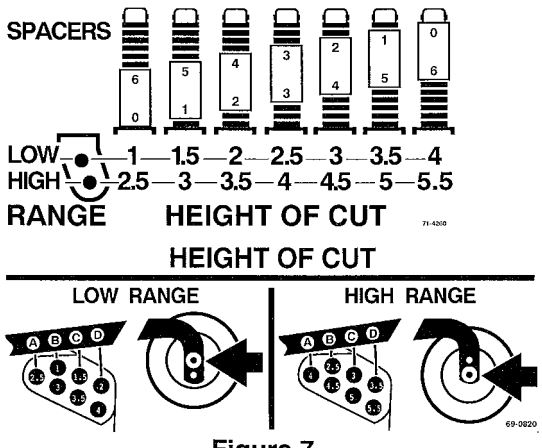

Figure 7

1. Start engine, position the machine on a level surface, lower cutting units to a point where castor wheels can be removed from arms, set lift levers in neutral, set parking brake and shut engine off. Remove ignition key to prevent accidental startup.

2. Position castor wheel axles on all cutting units in the same hole in the castor forks.

3. On the front cutting unit, remove the hairpin cotter and clevis pins from the rear castor pivot arms (Fig. 8). Align the pivot arm holes with selected height–of–cut bracket holes in the deck frames, insert clevis pins and install the hairpin cotters (Fig. 8).

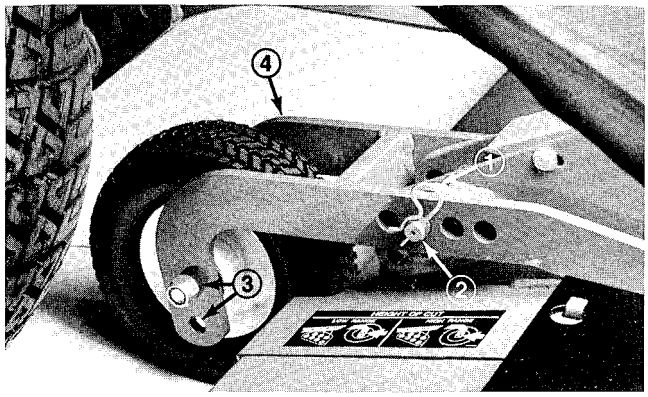

Figure 8

1. Hairpin Cotter
2. Clevis Pin
3. Castor Axle mount holes
4. Pivot Arm

4. On all remaining castor wheel assemblies, remove lynch pin from castor fork shafts (Fig. 9). Remove castor fork shaft and spacer assembly from the castor arm (Fig. 9). Place spacers onto castor spindle to desired height–of–cut setting and install castor fork shaft in arm (Fig. 9). Install remaining spacers onto shaft and secure assemblies with the lynch pin (Fig. 9).

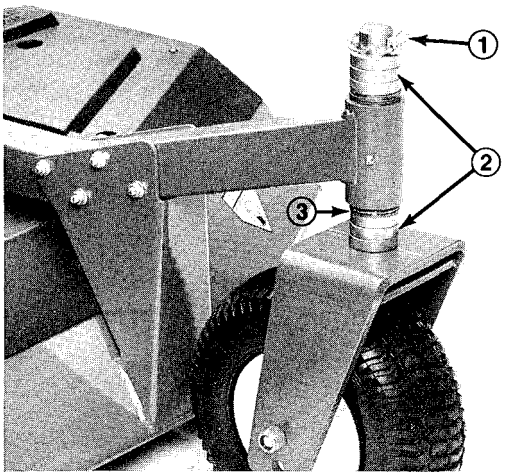

Figure 9

1. Lynch Pin
2. Spacers
3. Washers

ADJUSTING SKIDS

After initial set up or if height–of–cut is changed, deck skids should also be adjusted. Adjust skids by loosening flange lock nuts (Fig. 10), positioning skid at specified height (see chart) and re–tightening flange lock nuts.

Front Cutting Unit

All H.O.C.–3/8" to 1/2" above level surface

Outboard Cutting Units

1" H.O.C.–Skid positioned all the way up

1–1/2" to 3" H.O.C.– Skid positioned 1/2" to 1" above level surface.

3" and above H.O.C.– Skid positioned all the way down,

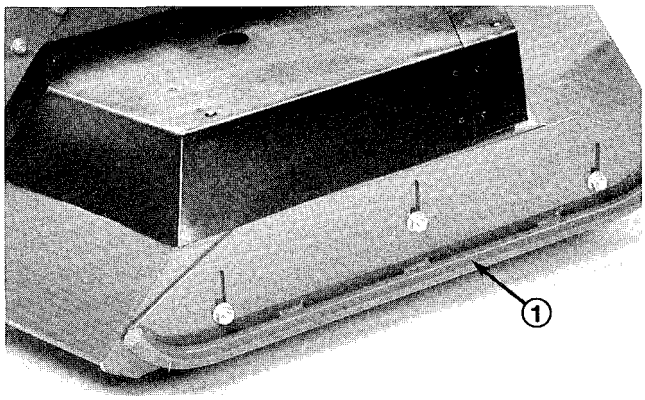

Figure 10

1. Skid

CONTROLS

Seat (Fig. 11) – Pull seat adjusting lever (right side) outward,slide seat fore or aft to desired position and release lever to lock seat in position. Seat moves 5.9 in.(15 cm) fore and aft in 19/32 in. (15 mm) increments. Knob at lower center provides infinitely variable weight adjustment from 110 – 285 lb (49.9 – 129.3 kg).

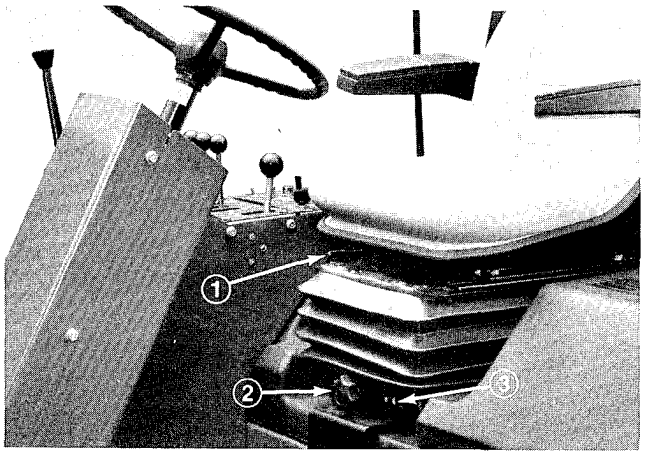

Figure 11
1. Seat Adjusting Lever
2. Weight Adjusting Knob
3. Weight Indicator

Seat height adjusts vertically to three positions. To raise: lift seat to first or second click stop; to lower: lift seat to highest position, then lower to lowest position. Arm rests pivot up and down.

Warning Light Check Switch (Fig. 12) – Before beginning operation, press switch button. All lights on control panel should light. If a light fails to illuminate, there is an electrical malfunction requiring immediate repair.

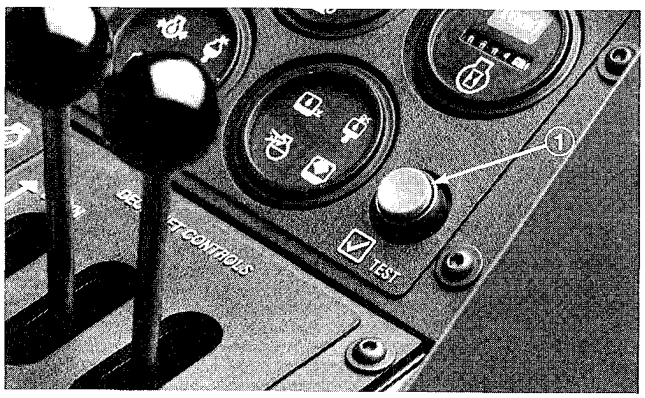

Figure 12
1. Warning Light Check Switch

Engine Oil Pressure Warning (Fig. 13) – Dangerously low engine oil pressure is indicated by both a warning indicator light and audible signal. When this occurs, stop the engine immediately to keep possible engine damage minimal.

No Charge Warning (Fig. 13) – No charge to the batteries is indicated by a warning indicator light and audible signal.

Fuel System Warning (Fig. 13) – A warning indicator light and audible signal warn of water in the fuel and need for service.

Coolant Temperature Warning (Fig. 13) – If engine coolant temperature exceeds 215° F (101.7° C), a warning indicator light illuminates and audible signal sounds. If coolant temperature exceeds 230° F (110° C), the engine automatically shuts down. Switch resets automatically when system and engine cools down.

Hour Meter (Fig. 13) – Registers accumulated hours of engine operation. Useful for determining intervals for service maintenance and lubrication.

Coolant Temperature Gauge (Fig. 13) – Indicates temperature of system coolant.

Fuel Gauge (Fig. 13) – Indicates quantity of fuel in fuel tank.

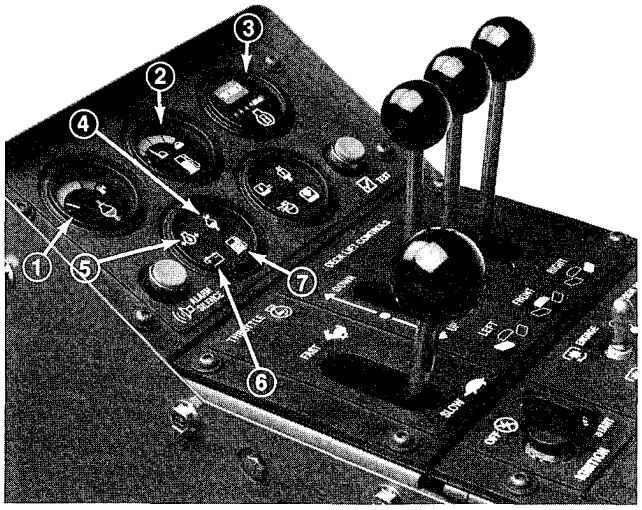

Figure 13
1. Coolant Temperature Gauge
2. Fuel Gauge
3. Hour Meter
4. Coolant Temperature Warning
5. Engine Oil Pressure Warning
6. No Charge Warning
7. Fuel System Warning

Hydraulic Oil Temperature Warning (Fig. 14) – A warning indicator light and audible signal warn of excessively high hydraulic oil temperature.

Hydraulic Oil Filter Warning (Fig. 14) – A warning indicator light and audible signal warn the filter is clogged and in need of service.

Hydraulic Oil Level Warning (Fig. 14) – A warning indicator light and audible signal warn of low hydraulic oil level. If oil level drops further, the engine will automatically be stopped. Engine cannot be restarted until oil supply is brought to a safe level.

Air Cleaner Warning (Fig. 14) – A warning indicator light and audible signal warn of a clogged air cleaner requiring service. These warnings alert that the engine has been operated in excess of when normal filter maintenance should have occurred.

CONTROLS

Alarm Silence Button (Fig. 14) – Pressing button silences alarm. Alarm system will disengage and automatically reset when problem is corrected.

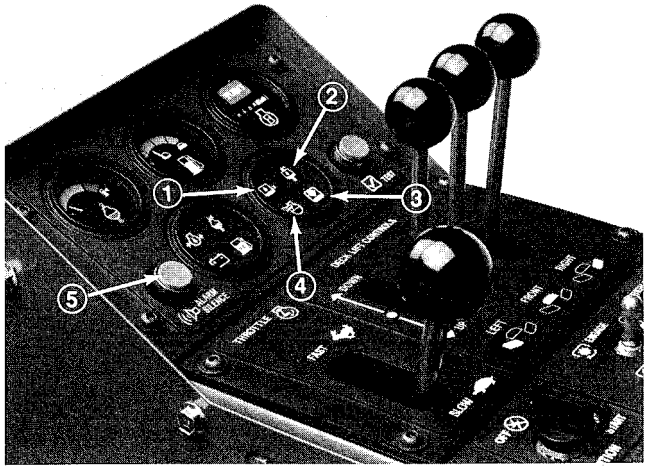

Figure 14

1. Hydraulic Oil Level Warning
2. Hydraulic Oil Temperature Warning
3. Hydraulic Oil Filter Warning
4. Air Cleaner Warning
5. Alarm silence Button

Parking Brake Indicator (Fig. 15) – On steering column. Alerts operator the parking brake is on.

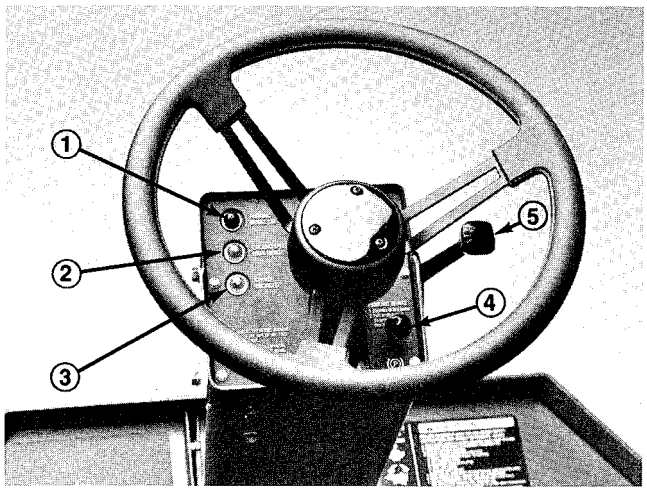

Figure 15

1. Parking Brake Indicator
2. High Range Speed Mode Indicator
3. Cruise Control Engaged Indicator
4. Parking Brake Knob
5. Tilt Steering Control Lever

High Range Ground Speed Indicator (Fig. 15) – On steering column. Alerts operator the Groundsmaster 580–D is in high range ground speed mode.

Cruise Control Indicator (Fig. 15) – On steering column. Alerts operator the cruise control is engaged.

Tilt Steering Control (Fig. 15) – Single lever on right side of steering column. Pivot lever rearward to release and move steering column and tower to desired angle. Pivot lever forward to lock steering column and wheel in desired position.

Key Switch (Fig. 16) – Three positions: OFF, ON and START. Rotate key to START and release when engine begins running. To stop, rotate key to OFF position.

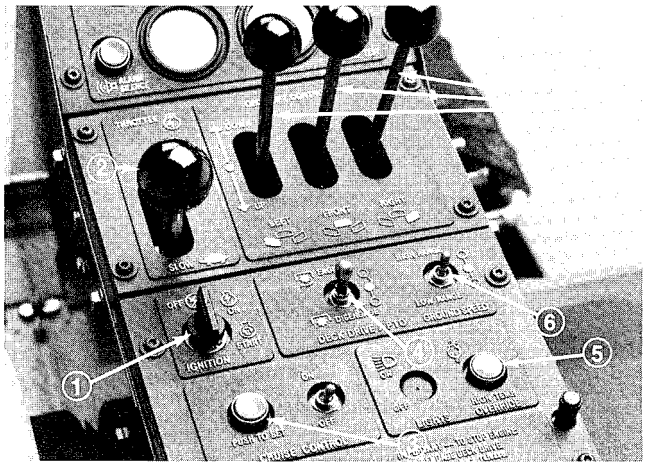

Figure 16

1. Key Switch
2. Throttle Control
3. Cruise Control Switches
4. Deck Drive / PTO Switch
5. Engine Override Switch
6. High Range/ Low Range Ground Speed Switch
7. Cutting Unit Lift Controls

Throttle Control (Fig. 16) – Used to operate engine at various speeds. Moving throttle forward increases engine speed – FAST; rearward decreases engine speed – SLOW.

Cruise Control Switches (Fig. 16) – Two switches on panel to right of operator; one for ON/OFF control, the other for cruise engagement. Cruise control operation, when in either high range or low range mode, is disengaged either by actuating the brake pedal or turning the switch to OFF position.

High Range/Low Range Ground Speed Switch (Fig. 16) – Single lever allows selection of either high or low range ground speeds. Push switch forward for High Range or pull back for Low Range. Switch returns to neutral position. Switch automatically resets to Low Range when a cutting unit is lowered, front cutting unit is not fully raised or if engine is shut off.

Cutting Unit Lift Controls (Fig. 16) – The two outside levers raise and lower the outside cutting units, the center lever raises and lowers the front unit. Engine must be running to lower and raise cutting units. Cutting unit blades automatically stop whenever the cutting units are raised. When lowering outside cutting units, keep control levers actuated until cutting units pass over center. Units will then "float" down to the turf.

Note: Holding the cutting unit levers in the actuated position while the units are lowering could drive them forcefully into the turf and cause cutting unit damage. After lowering mowers, do not allow levers to snap back to neutral. This could cause the levers to go past neutral, lock the cutting units in a non–float mode and prevent them from following turf contours.

CONTROLS

Deck Drive/PTO Switch (Fig. 16) – Pull sleeve upward on switch lever and push lever to ENGAGE position and release to actuate switch; lever will move to neutral position when released. Move lever to DISENGAGE position to stop. Switch automatically resets to DISENGAGE when all three cutting units are raised or engine is shut off.

Engine Over–ride Switch (Fig. 16 & 17) – If engine has overheated and been shut–down by the safety switch, depressing button will allow engine operation. Use button only for emergencies and only at short intervals.

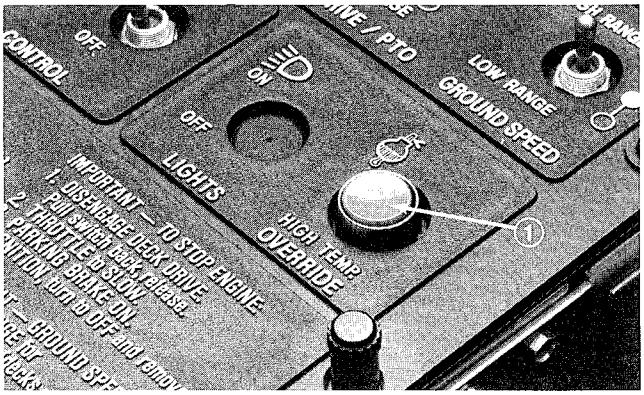

Figure 17
1. Engine Over–ride Switch

Electrical System – Fuses; Circuit Breaker (Fig. 18) – The electrical system is protected by one 5 Amp and two 15 Amp fuses located under the control panel to the operator's right. A 40 Amp circuit breaker with reset button is also under the control panel for protection of the entire wiring circuit. The button can be pressed if total loss of electrical functions occurs. However, the reason for the malfunction should first be found and corrected.

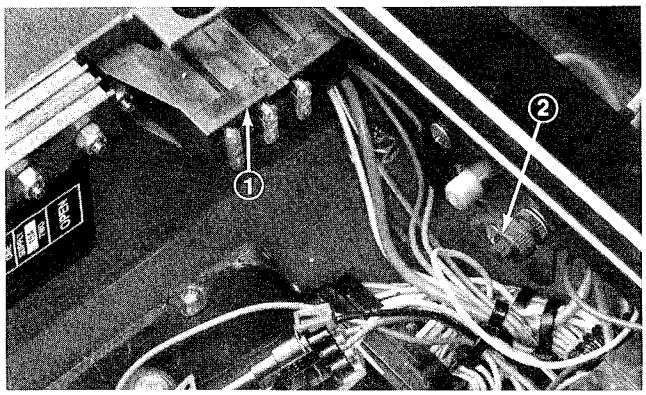

Figure 18
1. Fuse Block
2. Circuit Breaker Reset Button

Traction Pedal (Fig. 19) – Controls forward and reverse operation. Depress top of pedal to move forward and bottom to move in reverse. Ground speed is dependent upon high range/low range ground speed mode(slower in low than high range) and proportionate to how far pedal is depressed.

Steering/Parking Brake Pedals (Fig. 19) – The left and right turn pedals are connected to the front wheel brakes. Since both brakes work independently, they can be used to turn machine more sharply or to increase traction if one wheel tends to slip while operating on a hillside. However, wet grass or soft turf can be damaged when brakes are used for turning. A brake latch lever locks the two pedals together for parking. Whenever the engine is shut off, set parking brake to prevent accidental machine movement. Latch pedals together, depress them and pull the parking brake knob at the top of the steering tower up (Fig. 15) Depress brake pedals to release the parking brake.

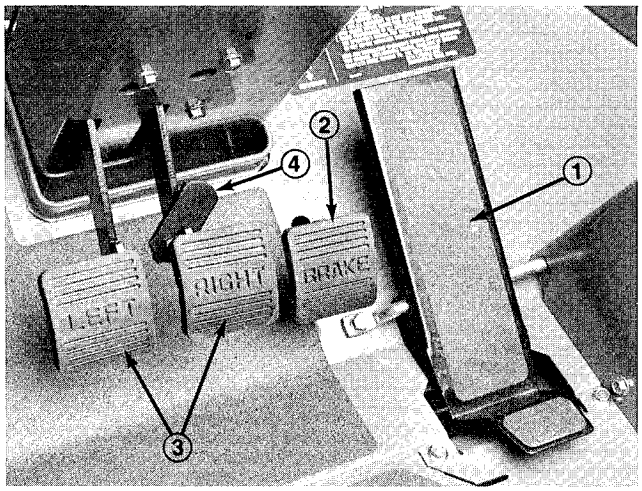

Figure 19
1. Traction Pedal
2. Brake Pedal
3. Steering / Parking Brake Pedals
4. Brake Latch Lever

Brake Pedal (Fig. 19) – Single pedal operated by the right foot actuates fully enclosed, multiple disc front brakes.

Note: There is dynamic braking through the closed–loop hydrostatic traction drive system.

Storage (Fig. 20) – A large removable tool storage tray is located under a hinged floor plate. A small storage and beverage holder is to the operator's right.

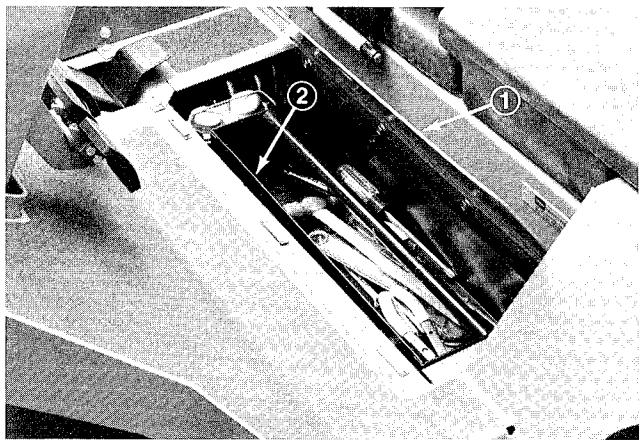

Figure 20
1. Hinged Floor Plate
2. Removable Tool Tray

OPERATING INSTRUCTIONS

IMPORTANT: The fuel system must be bled if any of the following have occurred:

A. Initial start–up of a new machine.

B. Engine has ceased running due to lack of fuel.

C. Maintenance has been performed upon fuel system components; i.e., filter replaced, separator serviced, etc.

Refer to Bleeding Fuel System.

STARTING/STOPPING ENGINE

1. Sit on seat, keep foot off traction pedal. Ensure parking brake is engaged. Set seat and tilt steering wheel and tower to comfortable position before starting engine.

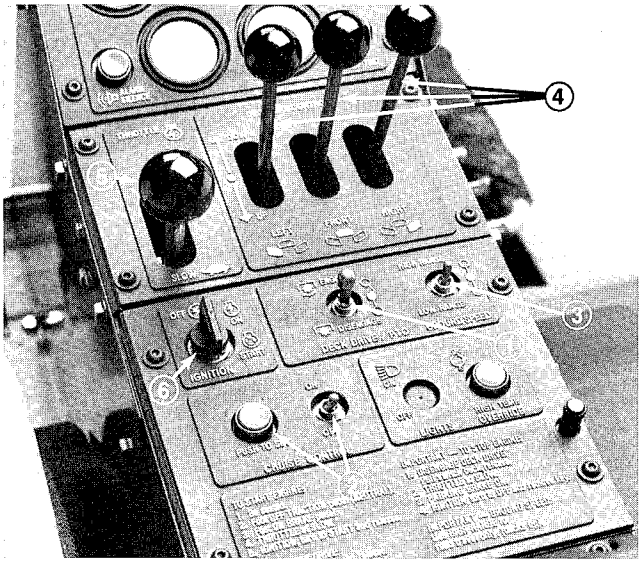

Figure 21

1. PTO Switch
2. Cruise Control Switches
3. HIGH/LOW Range Switch
4. Cutting Unit Lift Controls
5. Throttle Lever
6. Ignition Key Switch

2. Rotate ignition key switch to START position (Fig. 21). Release key immediately when engine starts and allow it to return to RUN position.

Note: Do not run starter motor more than 10 seconds at a time or premature starter failure may result. If engine fails to start after 10 seconds, turn key to OFF position. Recheck controls and procedures, wait 10 additional seconds and repeat starting operation.

3. When engine is first started, or after overhaul of the engine, hydrostatic transmission, steering or wheel drive, operate machine in forward and reverse for one to two minutes. Turn steering wheel left and right to check steering response and operate the lift levers to check for proper operation. Then, shut engine off, set parking brake and check for oil leaks, loose parts or other malfunctions.

CAUTION

Shut engine off and wait for all moving parts to stop before checking for oil leaks, loose parts or other difficulties.

4. Before stopping engine, move HIGH/LOW RANGE ground speed switch to LOW, disengage PTO and cruise control switches and move lift levers and traction pedal to neutral. Move throttle control to SLOW position. Set parking brake and turn ignition key to OFF position.

BLEEDING FUEL SYSTEM

1. Unlatch, raise and prop engine hood open and remove left side panel (Fig. 22).

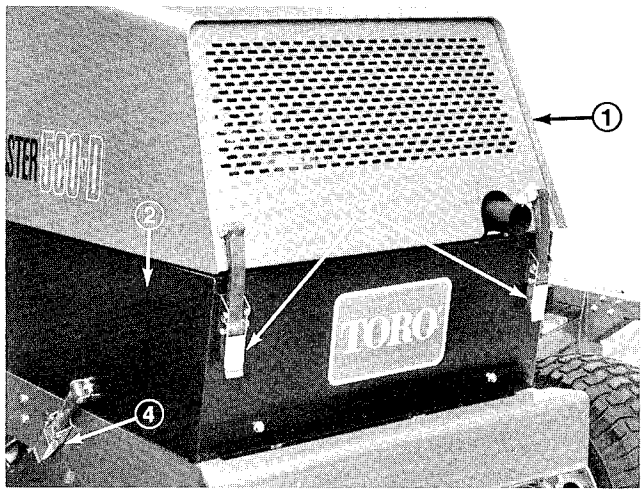

Figure 22

1. Engine Hood
2. Left Side Panel
3. Hood Latches
4. Side Panel Latch

2. At lower left side of engine, loosen air bleed screw at top of fuel filter/water separator (Fig. 23).

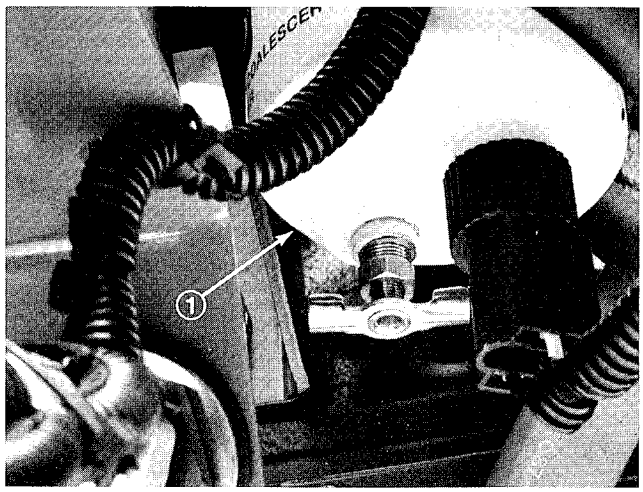

Figure 23

1. Fuel Filter / Water Separator

Note: If fuel tank is over half full, gravity will fill the fuel filter. If tank is less than half full, fill tank.

3. Loosen (3) air vent plugs on the engine fuel filter assembly about 1−1/2 turns (Fig. 24).

4. Rotate priming pump (Fig. 25) counter−clockwise until spring in pump assembly releases. Operate pump up and down until a solid stream of fuel flows out around filter plug and tighten plug.

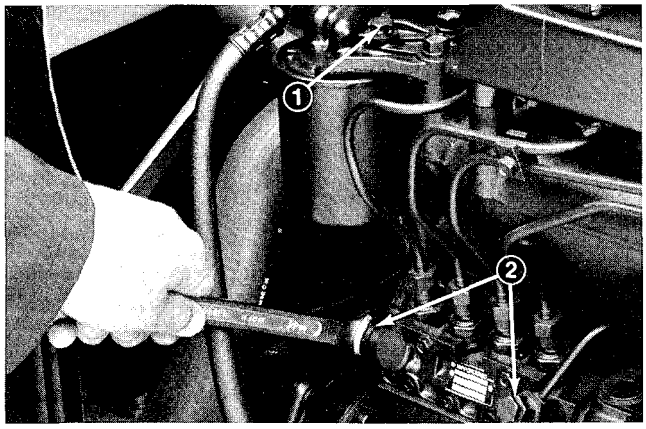

Figure 24
1. Fuel Filter Air Bleed Plug
2. Injection Pump Air Bleed plug

5. Loosen air vent plug on injection pump about 1−1/2 turns (Fig. 24). Operate priming pump until solid stream of fuel flows from the vent hole (Fig. 25), then tighten air vent plug.

6. Push priming pump down to compress spring and rotate clockwise to lock closed.

7. Try to start engine. If engine starts, install left side panel, lower hood and resume operation. If engine does not start, repeat steps 2−7.

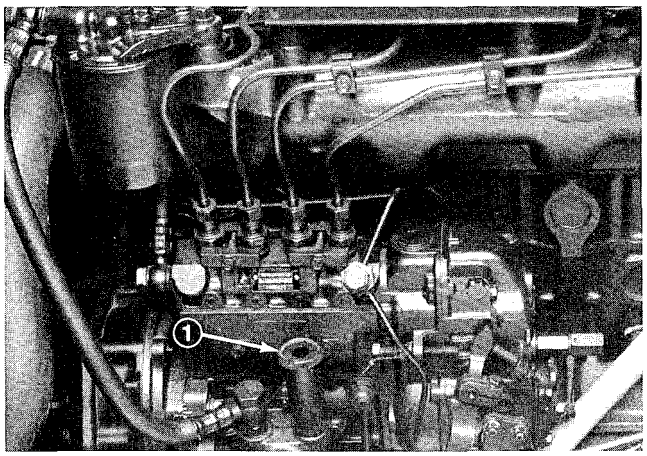

Figure 25
1. Priming Pump

DIAGNOSTIC LIGHT

The GM 580−D is equipped with a diagnostic light which indicates if the electronic controller is functioning correctly. The green diagnostic light is located under the control panel, next to the 40 amp circuit breaker. When the electronic controller is functioning correctly and the key switch is moved to the ON position, the controller diagnostic light will be illuminated. The light will blink if the controller detects a malfunction in the electrical system. The light will stop blinking and automatically reset when the key switch is turned to the OFF position.

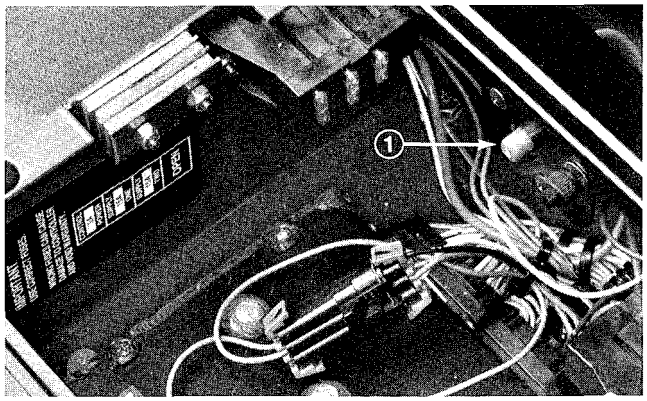

Figure 26
1. Electronic Controller Light

When the controller diagnostic light blinks, one of the following outputs has been detected in the controller:

1. One of the outputs has been shorted.
2. One of the outputs is open circuited.

Using the diagnostic display, determine which output is malfunctioning, refer to Checking Interlock Switches.

If the diagnostic light is not illuminated when the key switch is in the ON position, this indicates that the electronic controller is not operating. Possible causes are:

1. Loopback is not connected.
2. Fuses are blown.
3. The light is burned out.
4. Not functioning correctly.

Check electrical connections, input fuses and diagnostic light bulb to determine malfunction. Make sure loopback connector is secured to wire harness connector.

Note: If the diagnostic light flashes during normal operation of the machine, do not turn off the machine, toggle to the output and touch any switch. The LED will flash indicating the source of the failure.

DIAGNOSTIC ACE DISPLAY

The GM 580−D is equipped with an electronic controller which controls most machine functions. The controller determines what function is required for various input switches (i.e. seat switch, key switch, etc.) and turns on the outputs to actuate solenoids or relays for the requested machine function.
For the electronic controller to control the machine as desired, each of the input switches, output solenoids and relays must be connected and functioning properly.
The Diagnostic ACE display is a tool to help the user verify correct electrical functions of the machine.

OPERATING INSTRUCTIONS

CHECKING INTERLOCK SWITCHES

The purpose of the interlock switches are to prevent the engine from cranking or starting unless the traction pedal is in NEUTRAL, to ensure cutting units disengage when raised or when operator leaves the seat. In addition, the engine will stop when the traction pedal is depressed with operator off the seat.

CAUTION

THE INTERLOCK SWITCHES ARE FOR THE PROTECTION OF THE OPERATOR AND BYSTANDERS, AND TO ENSURE CORRECT OPERATION OF THE MACHINE, SO DO NOT BYPASS OR DISCONNECT THEM. CHECK OPERATION OF THE SWITCHES DAILY TO ASSURE INTERLOCK SYSTEM IS OPERATING. IF A SWITCH IS DEFECTIVE, REPLACE IT BEFORE OPERATING. THE CONTROLLER HAS THE ABILITY TO DETECT BYPASSED SWITCHES AND MAY PREVENT THE OPERATION OF THE MACHINE IF SWITCHES ARE BYPASSED. DO NOT RELY ENTIRELY ON SAFETY SWITCHES – USE COMMON SENSE!

To verify interlock switch function:

1. Park machine on a level surface, lower the cutting units, stop the engine and engage the parking brake.

2. Open control panel cover. Locate wire harness and connectors near controller. Carefully unplug loop back connector from harness connector (Fig. 27).

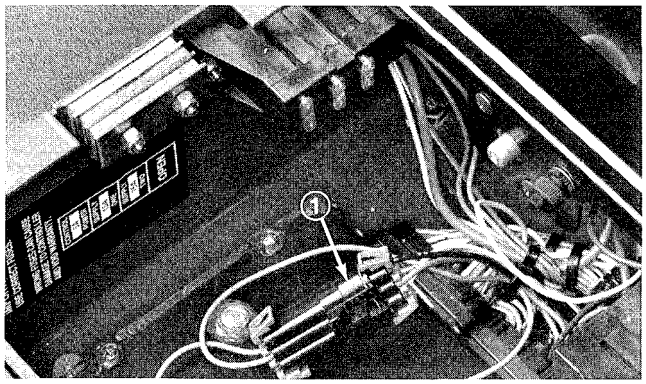

Figure 27

1. Wire Harness and Connectors

3. Connect the Diagnostic ACE display connector (Fig. 28) to the harness connector. Make sure correct overlay decal is positioned on Diagnostic ACE display.

4. Turn the key switch to the ON position, but do not start machine.

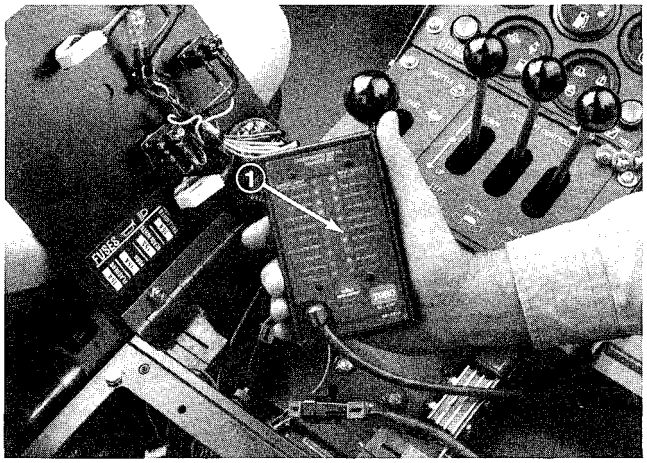

Figure 28

1. Diagnostic ACE

Note: The red text on the overlay decal refers to input switches and the green text refers to outputs.

5. The "inputs displayed" LED, on lower right column of the Diagnostic ACE, should be illuminated. If "outputs displayed" LED is illuminated, press the toggle button, on Diagnostic ACE, to change LED to "inputs displayed".

6. The Diagnostic ACE will illuminate the LED associated with each of the inputs when that input switch is closed.
Individually, change each of the switches from open to closed (i.e., sit on seat, engage traction pedal, etc.), and note that the appropriate LED on Diagnostic ACE will blink on and off when corresponding switch is closed and opened. Repeat on each switch that it is possible to be changed by hand.

7. If switch is closed and appropriate LED does not blink on and off, check all wiring and connections to switch and/or check switches with an ohm meter. Replace any defective switches and repair any defective wiring.

Now start engine and raise and lower each cutting unit. Note the appropriate LED on the Diagnostic ACE (i.e. LED is illuminated when cutting unit is lowered and LED is not illuminated when cutting unit is raised.

The Diagnostic ACE also has the ability to detect which output solenoids or relays are turned on. This is a quick way to determine if a machine malfunction is electrical or hydraulic.

To verify output function:

1. Park machine on a level surface, lower the cutting units, stop the engine and engage the parking brake.

2. Open control panel cover. Locate wire harness and connectors near controller. Carefully unplug loopback connector from harness connector.

3. Connect the Diagnostic ACE connector to the harness connector. Make sure correct overlay decal is positioned on Diagnostic ACE.

4. Turn the key switch to the ON position, but do not start machine.

Note: The red text on the overlay decal refers to input switches and the green text refers to outputs.

5. The "outputs displayed" LED, on lower right column of Diagnostic ACE, should be illuminated. If "inputs displayed" LED is illuminated, press the toggle button, on Diagnostic ACE, to change LED to "outputs displayed".

Note: It may be necessary to toggle between "inputs displayed" and "outputs displayed" several times to do the following step. To toggle back and forth, press toggle button once. This may be done as often as required. DO NOT HOLD BUTTON.

6. Sit on the seat and attempt to operate the desired function of the machine. (If you need help verifying the correct input settings for each function, refer to the Logic Chart on page 21) The appropriate output LED's should illuminate to indicate that the ECU is turning on that function. (Refer to the logic chart to be certain of the specified output LED's).

Note: If any output LED is blinking, this indicates an electrical problem with that OUTPUT. Repair / replace defective electrical parts immediately. To reset a blinking LED, turn the key switch "OFF", then back "ON".

If no output LED's are blinking, but the correct output LED's do not illuminate, verify that all the input switches work by following the instructions on how to verify interlock switches. Verify correct switch function.

If the output LED's are on as specified, but the machine does not function properly, this indicates a non–electrical problem. Repair as necessary.

Note: Due to electrical system constraints, the output LED's for "START", "MONITOR" and "ETR/ALT" may not blink even though an electrical problem may exist for those functions. If the machine problem appears to be with one of these functions, be certain to check the electrical circuit with a volt / ohm meter to verify that no electrical problem exists to these functions.

If electronic controller experiences an output failure for either the cruise control or one of the cutting units, the controller will disable the machine function.
Indications that this is the cause of the problem include:

A. Flashing green diagnostic light.

B. Diagnostic ACE will illuminate the "output fail" LED.

C. Diagnostic ACE will flash which output failed.

D. Machine will not respond to ignition key inputs.

The above indicates an ECU problem, contact your local Authorized TORO Distributor for assistance.

If each output switch is in the correct position and functioning correctly, but the output LED's are not correctly illuminated, this indicates an ECU problem. If this occurs, contact your Toro Distributor for assistance.

IMPORTANT: The Diagnostic ACE display should not be left connected to the machine. It is not designed to withstand the environment of the machine's every day use. When done using Diagnostic ACE, disconnect it from the machine and reconnect loopback connector to harness connector. Machine will not operate without loopback connector installed on harness. Store Diagnostic ACE in dry, secure location in shop, not on machine.

LOGIC GRID

X=CLOSED, O=OPEN, P=OUTPUT ON,
KEY: M=MOMENTARILY CLOSED,
B= MUST BE CLOSED ONLY IF HI TEMP SWITCH IS CLOSED.

ACTIONS	INPUTS: 0 Hi Range Disengage	1 Parking Brake (X=OFF)	2 Key Run	3 Traction Neutral	4 Seat Switch	5 High Coolant Temp	6 High Temp Override	7 Cruise Control Enable	8 PTO Engage	9 PTO Disengage	10 Front Deck Down	11 Right Deck Down	12 Left Deck Down	13 Hi Range Engage	14 Hyd. Oil Level (x=ok)	15 Cruise Control Engage	16 Service Brake (x=off)	17	AØ Start Key	OUTPUTS: 0	1	2 Right Deck Engage	3 Left Deck Engage	4 Gauge Power ON	5 Front Deck Engage	6 Cruise Control Clutch	7 ETR Hold / Alt	8	9 Output Fail	10 Harness	11	12 Start	13 Hi Range Engage
1) Start				X					O																		P					P	
2) Hi Range Engage			X								O	O	O	M																		P
3) Run (no operator)			X	X		O	B								X												P					
Run (with operator)		X	X	O	X	O	B								X		X										P					
4) Cruise Engage			X		X			X								M	X									P						
5) Front Deck Engage	O		X		X	O			M	O	X			O											P							
6) Right Deck Engage	O		X		X	O			M	O		X		O								P										
7) Left Deck Engage	O		X		X	O			M	O			X	O									P									
8) Gauges ON			X																					P							

OPERATING INSTRUCTIONS

CHECK WARNING INDICATOR LIGHTS

Each day, before operating assure all warning lights are functioning:

1. Sit on seat and apply parking brake. Turn ignition key ON and push TEST button. All lights should illuminate.

2. If a light fails to illuminate, replace the bulb and test again.

PUSHING OR TOWING MACHINE

In an emergency, the Groundsmaster 580-D can be moved by the following methods:

A. Actuate the by-pass valve in the variable displacement hydraulic pump and push or tow the machine.

B. Unlock the front hubs and tow the machine.

DANGER

There is no effective braking of the Groundsmaster 580-D with the wheel hubs disengaged. Unless it is on a level surface or the wheels are blocked, the machine will move freely. Do not unlock the wheel hubs without either blocking the wheels or connecting the machine to a towing vehicle by means of a rigid towing device.

Pump By-pass Method (short distances only)

IMPORTANT: Do not push or tow the machine faster than 2-3 mph (3-4.8 km/hr) because internal transmission damage may occur. The by-pass valve must be open whenever the machine is pushed or towed by this method, TORO does not recommend this process be used as standard procedure.

1. By-pass valve is located in left side of variable displacement pump (Fig. 29). Rotate the valve 1/2 to 1 turn counter-clockwise to open and allow oil to by-pass internally. Because fluid is by-passed, the machine can be moved - slowly - without damaging the transmission.

2. Rotate the valve clockwise until it is securely seated before starting the engine. However, do not exceed 5-8 ft-lb (7-11 N m) torque to close the valve.

IMPORTANT: Running the engine with the by-pass valve open will cause the transmission to overheat.

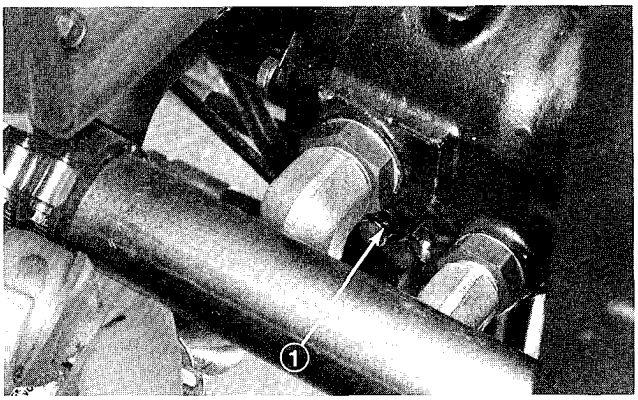

Figure 29
1. By-Pass Valve

Unlocked Hub Method

1. Either block the wheels or connect the machine to a towing vehicle with a rigid towing device.

DANGER

Vehicle will roll with front wheel hubs disengaged. Vehicle must be on a level surface or wheels must be blocked. There is no effective braking with wheel hubs disengaged.

2. Remove bolts securing the disengage covers to both front wheel hubs.

3. Face the dimpled portion of the disengaged covers inward and reinstall the covers. Wheel hubs are now unlocked.

4. Lock the wheel hubs immediately after towing operations are completed. Remove disengage covers and reinstall with the dimpled portion facing away from the wheel hubs.

CAUTION

Do not remove wheel blocks or towing devices until wheel hubs are securely locked.

OPERATING CHARACTERISTICS

Familiarization - Before mowing for the first time, practice operating in a large, open and relatively level area. Start and stop the engine, operate in forward and reverse in LOW RANGE ground speed. Practice using the cruise control. Lower and raise cutting units individually and simultaneously. When thoroughly familiar with machine functions, practice operating around trees and obstacles while using the individual wheel brakes. Also operate up and down slopes (IN LOW RANGE).

OPERATING INSTRUCTIONS

Note: TORO recommends HIGH RANGE ground speed be used for road travel only (with cutting units up).

Points to consider while operating the traction unit, cutting units or other implements are the hydrostatic transmission, engine speed, load on the cutting blades or other implement components and the importance of the brakes. To maintain adequate power for the traction unit and implement components while operating, regulate traction pedal position to keep engine rpm high and relatively constant. Good rules to follow are; decrease ground speed as the implement load increases, and increase ground speed as the load decreases.

Warning Systems – If a warning light and audible warning come on during operation, stop immediately and correct the problem before continuing. Serious damage could occur if the machine is operated with an uncorrected problem. However, if the engine stops because of overheating, the emergency over–ride button can be used to operate the engine for short intervals (Fig. 30).

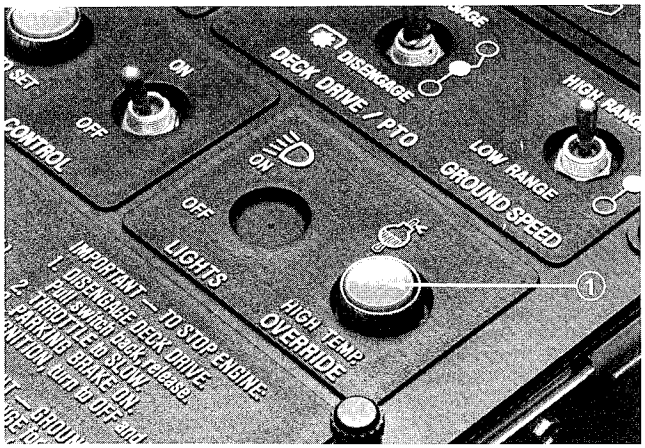

Figure 30
1. Engine Over–ride Button

Mowing – When approaching area to mow, position the ground speed selector in LOW RANGE and release. Switch lever will return to neutral and High Range light will go out. Move the throttle lever to FAST and lower the cutting units. Pull the sleeve of the deck drive PTO switch up, position it in ENGAGE position and release. Lever will return to neutral position and PTO will be engaged automatically. Depress traction pedal slowly to begin cutting operation.

Note: After lowering mowers, do not allow levers to snap back to neutral. This could allow the levers to go past neutral, lock the cutting units in a non–float mode and prevent them from following turf contours.

Should either outboard cutting unit contact an immovable object while mowing, the mower lift arm latch assembly absorbs the impact and breaks away. This allows the cutting unit to swing rearward. Should this occur, stop the machine. Fully raise the cutting unit, then lower it to cutting position. This will allow the lift arm latch assembly to return to normal configuration. Be sure to inspect the cutting unit for damage and repair as necessary before resuming operation.

Caution: This product may exceed noise levels of 85 dB(A) at the operator position. Ear protectors are recommended for prolonged exposure to reduce the potential of permanent hearing damage.

The individual wheel brakes can be used to assist in turning the machine. However, use them carefully, especially on soft or wet turf because it may be torn accidentally. The brakes are also beneficial to maintain traction; for example, in some slope conditions, the uphill wheel may slip and lose traction. If this occurs, gradually depress the uphill brake pedal until the uphill wheel stops slipping, thus increasing traction on the downhill wheel.

To stop mowing, depress the brake pedal to stop and disengage the cruise control (if used), move the PTO switch to DISENGAGE and release (switch returns to neutral), then fully raise the cutting units.

High Range Ground Speed Operation – Toro recommends HIGH RANGE ground speed operation be performed only on roads with the cutting units in fully raised position. Start the machine in LOW RANGE, then shift to HIGH RANGE. The HIGH RANGE Indicator light will turn ON, indicating the machine is in the HIGH RANGE mode. To cease HIGH RANGE operation, take foot off traction pedal and apply the brakes. Move throttle lever to SLOW and position ground speed selector in LOW RANGE. If the engine begins to labor while climbing an incline, ease off on the traction pedal and shift to LOW RANGE. This will prevent overload of the engine and hydraulic system.

CAUTION

Use extreme care while operating in HIGH RANGE ground speed selection. Watch closely for bystanders, other vehicles and possible hidden hazards and be prepared to stop quickly.

Cruise Control Operation–While operating the machine at the desired ground speed, turn the cruise control switch to ON and press the cruise control actuating button. The traction pedal will be held in its position and a constant ground speed will be maintained. A light on the steering column indicates the cruise control is in operation. Ground speed can be changed by over–riding the traction pedal. The pedal will maintain its new position when the over–riding force is released.

To stop cruise control operation: Turn cruise control switch to OFF position or depress the service brake.

OPERATING INSTRUCTIONS

Note: Hold the traction pedal in position when stopping cruise control operation, otherwise the machine will stop abruptly due to hydrostatic braking action.

If it is an emergency and it becomes necessary to stop suddenly while in cruise control, depress the service brake pedal, this breaks the electrical circuit, returns the traction pedal to neutral and stops the machine.

Stopping the Machine – To stop the machine and cease operation, take foot off traction pedal and apply the brakes. Move the throttle lever to SLOW, ground speed selector to LOW RANGE and deck lift controls to neutral. Switch cruise control to OFF, set the parking brake and turn ignition key to OFF. Remove the key if the machine is to be left unattended.

LUBRICATION

The following must be lubricated regularly with No. 2 general purpose lithium or molybdenum base grease. The chart below lists service intervals based upon normal operating conditions. However, lubricate more frequently under extreme conditions. The left column numbers correspond with numbers in Fig. 31.

Component	No. of Fittings	Service interval
Center Cutting Unit		
1. Castor Wheel Bearings	4	Every 8 hours or daily.
2. Castor Fork Shaft Bushings	2	Every 8 hours or daily.
3. Spindle Shaft Bearings	5	Every 50 hours.
4. Idler Pulley Bushings	2	Every 50 hours
5. Deck Hinge Pivot Bushings	2	Every 50 hours.
Right & Left Hand Cutting Units		
6. Castor Wheel Bearing	8	Every 8 hours or daily.
7. Castor Fork Shaft Bushings	8	Every 8 hours or daily
8. Spindle Shaft Bearings	6	Every 50 hours.
Front Lift Arm Assemblies		
9. L.H. & R.H. Lift Arm	3	Every 50 hours.
10. Hydraulic Cylinder Pivot Bushings	4	Every 50 hours.
11. Lift Arm Ball Joints	2	Every 50 hours
Outboard Cutting Unit Lift Assemblies		
12. Lift Arm Pivots	4	Every 50 hours.
13. Anti–sway Arm Bushings	2	Every 50 hours.
14. Lift Arm Elbow Shaft Bushings	4	Every 50 hours.
15. Latch Ball Joints	4	Every 50 hours.
16. Hydraulic Cylinder Pivot Bushing	4	Every 50 hours.
17. Lift Clevis Pivot Bushings	2	Every 50 hours.
Traction Unit		
18. Steering Brake Pedal Arms	2	Every 50 hours.
19. Engine Water Pump Assy.	1	Every 50 hours.
20. Engine to Pump Drive Yoke	3	Every 50 hours.
21. Rear Wheel Spindle Bushings	2	Every 50 hours.
22. Rear Axle Pivot Bushings	1	Every 50 hours
23. Steering Tie Rod Ball Joint	2	Every 50 hours.
24. Service Brake Pivot Bushings	1	Every 50 hours.
25. Hydraulic Steering Cylinder Ball Joints	2	Every 50 hours.
26. Rear Wheel Bearings	2	Repack every 1000 hours

Refer to chart, page 24 and Figure 31 for areas to lubricate and number of fittings involved.

LUBRICATION

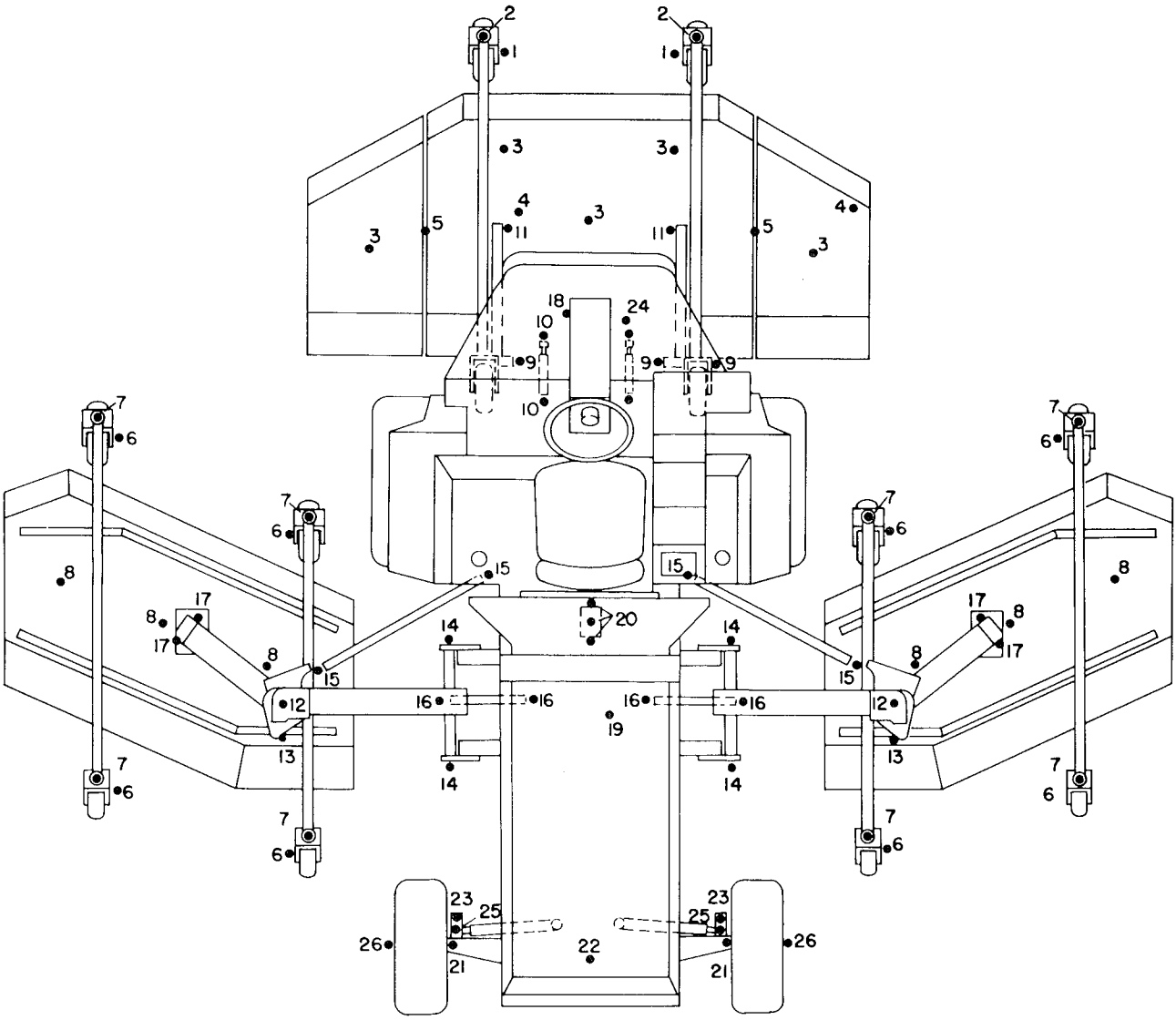

Figure 31

DAILY MAINTENANCE CHECKLIST

Daily Maintenance: (duplicate this page for routine use)

Maintenance Check Item ➧	Daily Maintenance Check For Week Of _____						
	MON	TUES	WED	THURS	FRI	SAT	SUN
✓ Safety Interlock Operation							
✓ Brake Operation							
✓ Engine Oil Level							
✓ Cooling System Fluid Level							
Drain Water/Fuel Separator							
✓ Air Filter/Pre–Cleaner Condition							
✓ Radiator & Screen for Debris							
✓ Unusual Engine Noises							
✓ Unusual Operating Noises							
✓ Height of Cut							
✓ Hydraulic System Oil Level							
✓ Hydraulic Hoses for Damage							
✓ Fluid Leaks							
✓ Tire Pressure							
✓ Instrument Operation							
✓ Condition of Blades							
Lubricate All Grease Fittings[2]							
Touch–up Damaged Paint							

[1] = Immediately after every washing, regardless of the interval listed.

Notation for areas of concern: Inspection performed by_____

Item	Date	Information
1		
2		
3		
4		
5		
6		
7		

Check proper section of Operator's Manual for fluid specifications

MAINTENANCE

CAUTION

Before performing machine maintenance, park on a level surface, set the parking brake, fully lower cutting units, shut engine off and remove key from ignition switch. If engine must be running to perform maintenance or adjustment, stay clear of moving parts. If engine has been operating shortly before maintenance has begun, avoid engine, muffler, turbo-charger and radiator as they may be hot enough to cause injury.

ENGINE OIL AND FILTER

The engine uses any high quality detergent oil having the American Petroleum Institute – API – "service classification" CD. Oil viscosity recommendations are:

AMBIENT TEMPERATURE	PROPER VISCOSITY
−20° to 20° F (−28.9° to −6.7° C)	SAE 10
20° to 105° F (−6.7° to 40.6° C)	SAE 30
105° F (40.6° C) and up	SAE 40

Note: Do not use multi-viscosity oils.

Oil Level Check

Check engine oil level after every five hours operation.

1. Unlatch and raise hood and prop it open. Unlatch and remove left side panel (Fig. 32). Make sure hood prop is secured in one of the mounting brackets on hood.

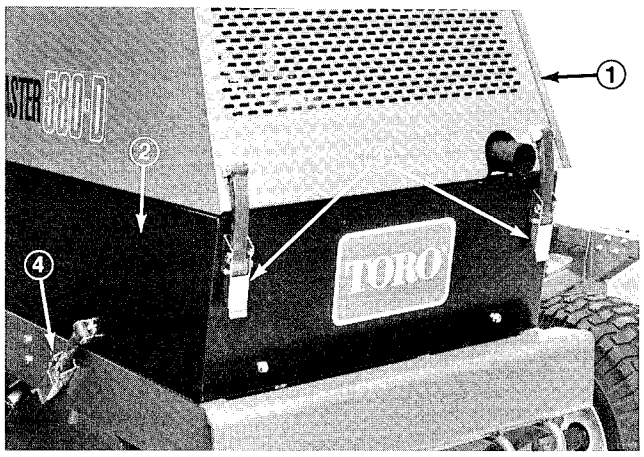

Figure 32
1. Engine Hood
2. Left Side Panel
3. Hood Latches
4. Side Panel Latch

2. Remove dipstick, wipe with clean rag (Fig. 33) and fully re-insert in tube. Remove from tube and check oil level. Level should be between the marks on the dipstick. If level is low, remove filler cap (Fig. 34). Add oil until level is to top mark on dipstick (Fig. 33). **DO NOT OVERFILL.**

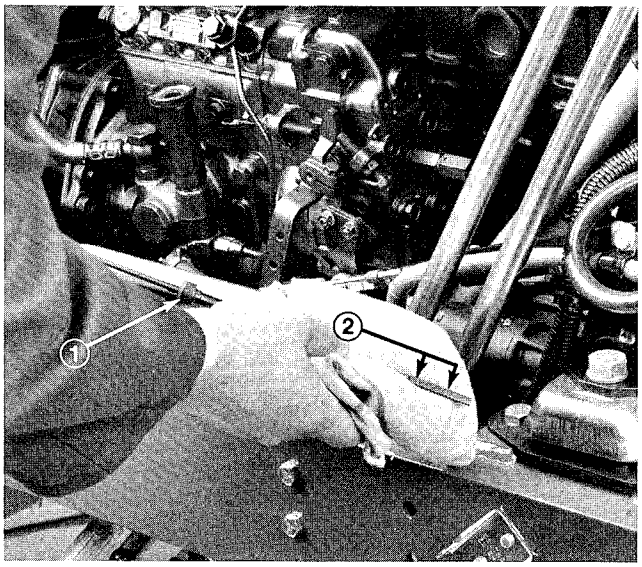

Figure 33
1. Dipstick
2. Keep Oil Level Between These Marks

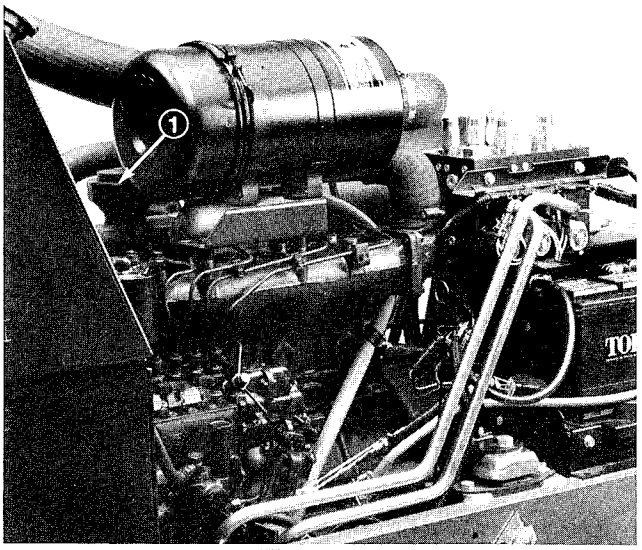

Figure 34
1. Engine Oil Fill Cap

Changing Engine Oil and Filter

The engine holds approximately 8.5 qt (8 l) of oil. Change oil and filter after the first 50 hours, then change both every 100 hours operation. However, change oil more frequently when engine is operated in dusty or sandy conditions. If possible, run engine just before changing oil because warm oil flows better and carries more contaminants than cold oil.

1. Unlatch and raise hood and prop it open (Fig. 32). Make sure hood prop is secured in one of the mounting brackets on hood. Unlatch and remove both side panels (Fig. 32).

2. Place drain pan in line with the drain plug (Fig. 32). Clean area around drain plug.

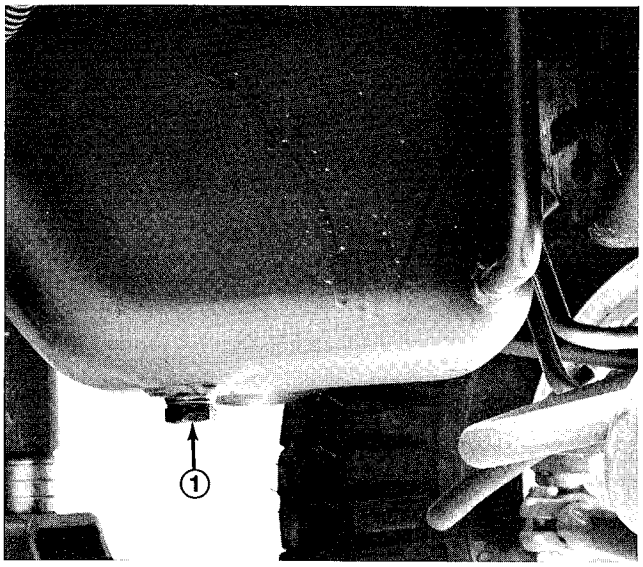

Figure 35
1. Engine Oil Drain Plug

3. Remove drain plug and allow oil to drain into pan. Remove and replace oil filter (Fig. 36); refer to parts catalog for replacement number. Apply a coating of oil to the filter O–ring and tighten filter by hand.

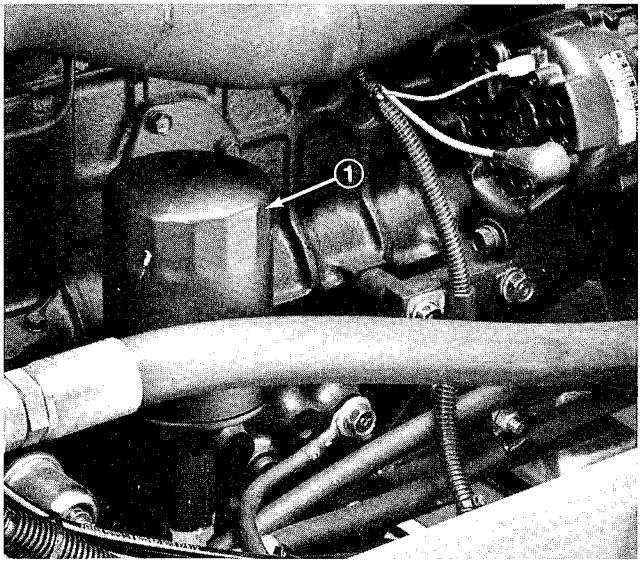

Figure 36
1. Engine Oil Filter

ENGINE FUEL SYSTEM

1. Locate fuel filter/water separator on lower left side of engine and drain daily (Fig. 37).

2. Every 200 hours operation, replace filter element of the fuel filter/water separator.

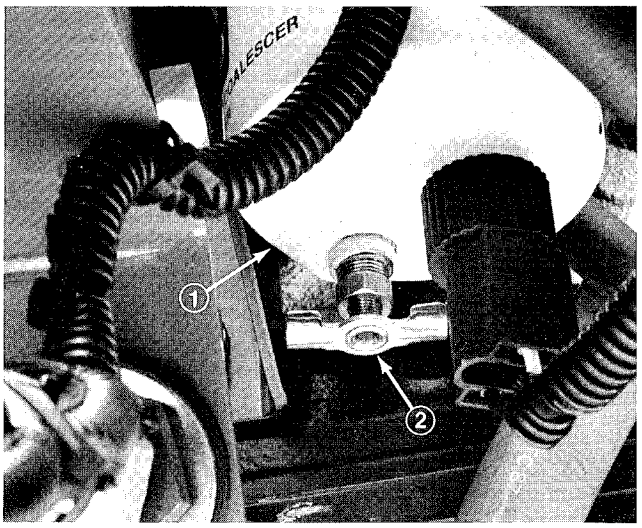

Figure 37
1. Fuel Filter/Water Separator
2. Water Drain Plug

3. Every 1000 hours operation, or yearly, replace the engine fuel filter (Fig. 38) – left front side of engine – and drain water from the fuel tank. Apply clean fuel oil to the filter O–ring. Use hands only to install and tighten filter.

4. If fuel system becomes contaminated or machine is to be stored for an extended period, locate drain at bottom of fuel tank and drain and clean tank. Flush tank with clean fuel oil.

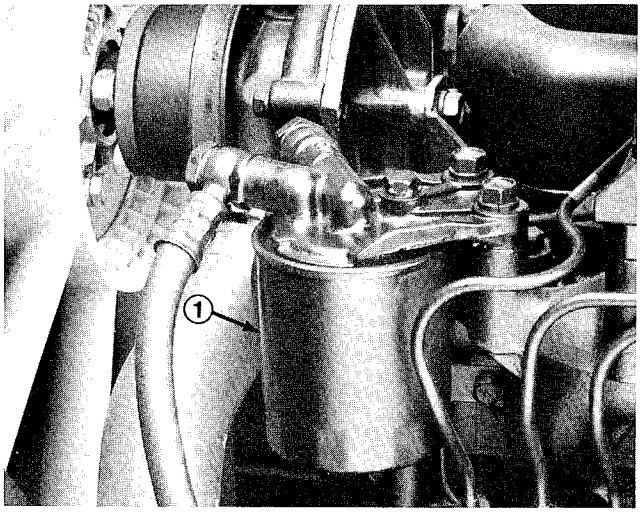

Figure 38
1. Engine Fuel Filter

IMPORTANT: Following the maintenance steps listed above will, under normal conditions, keep the system trouble–free. However, if the indicator light on the control panel and audible warning signal activate during operation, the engine should be stopped and the fuel system serviced before operation is resumed. This can prevent serious engine damage from occurring.

MAINTENANCE

ENGINE COOLING SYSTEM

The cooling system holds approximately 3.9 gal (14.7 l) of a 50/50 solution of ethylene glycol anti–freeze and water. To properly maintain the system, use the following procedures:

1. Check coolant level each day before starting the engine; refer to Check Cooling System in Before Operating section.

CAUTION

Check coolant level before the engine has been started because coolant system will not be pressurized. When the engine is hot and the radiator cap removed, hot pressurized coolant can escape and cause burns. If engine coolant is hot, slowly and carefully remove radiator cap.

2. Each day after operation, clean debris from the radiator grille. Clean more frequently in dusty and dirty conditions.

A. Move seat forward as far as possible.

B. Remove upper and lower grille assemblies (Fig. 39).

C. Use compressed air to clean the grilles and remove debris from grille mounting areas.

D. Install grilles after cleaning, lower and lock seat in position.

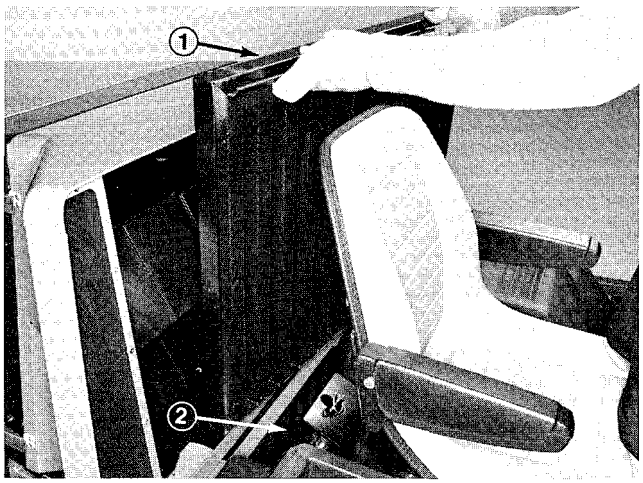

Figure 39
1. Upper Grille 2. Lower Grille

3. Every 100 hours operation, clean the radiator and hydraulic cooler fins. Clean more frequently in dusty and dirty conditions.

A. Use procedures in step 2, items a–c.

B. Unlatch latch handles on both sides and remove radiator cowl and grille support (Fig. 40).

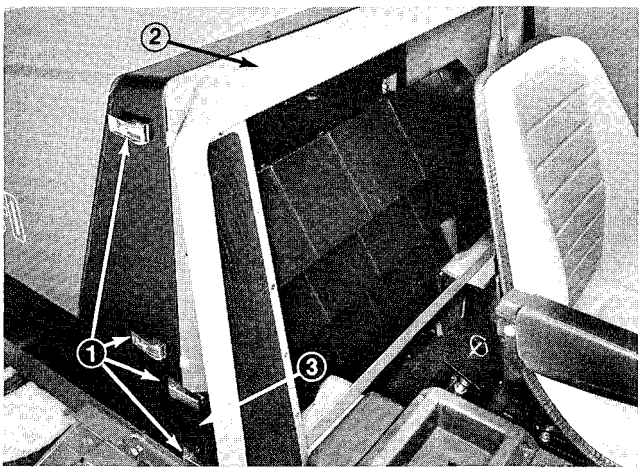

Figure 40
1. Latch Handles 3. Grille Support
2. Radiator Cowl

C. Remove wing nuts securing top of oil cooler to upper radiator support and pivot top of oil cooler away from radiator (Fig. 41).

D. Unlatch and raise hood and prop it open. Use compressed air from the engine fan side to clean the radiator and oil cooler fins.

E. Re–assemble components after cleaning is completed.

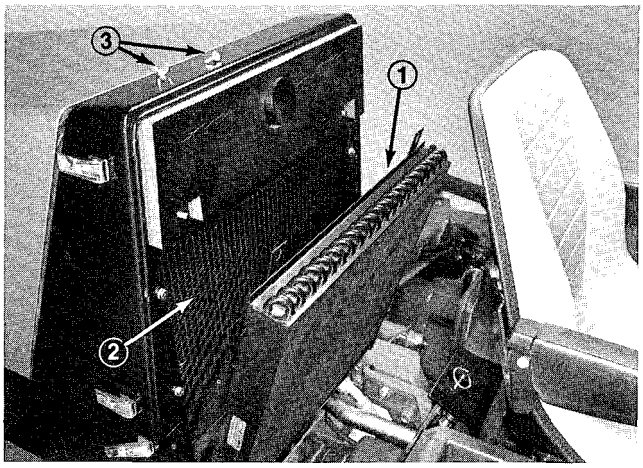

Figure 41
1. Oil Cooler 2. Radiator 3. Wing Nuts

4. Every 100 hours operation, inspect fan belt for condition and proper tension. Replace belt if condition warrants. Check and adjust tension as follows:

A. Unlatch and raise hood and prop it open. Unlatch and remove right side panel.

B. Proper tension will allow 1/2 in. (13 mm) deflection when a force of 10 lbs. is applied on the belt midway between the pulleys. If deflection is incorrect, proceed to step c; If deflection is correct, install panel and close hood.

C. Loosen bolts (3) securing alternator to plate and mounting bracket (Fig. 42). Rotate alternator away from engine to increase tension and tighten bolts. Check belt tension after adjustment and re–adjust, if necessary.

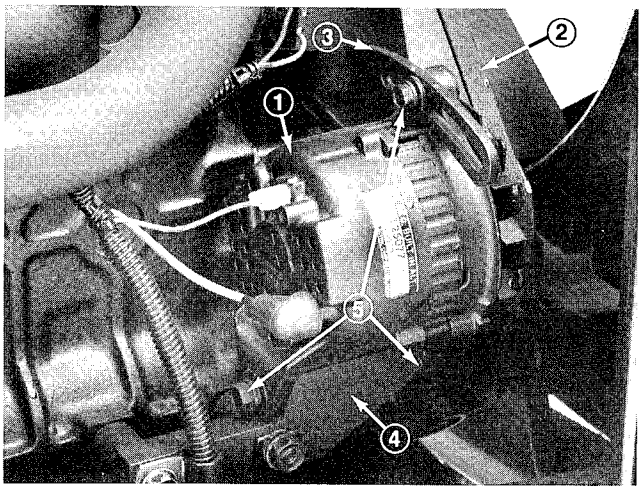

Figure 42
1. Alternator
2. Belt
3. Plate
4. Mounting Bracket
5. Bolts

D. Install panel and close hood.

5. Every 100 hours operation, check condition of cooling system hoses and tightness of connections. Repair, as needed.

6. Every 1000 hours, or yearly, drain and flush the cooling system and replace the thermostat and hose assemblies.

AIR CLEANER MAINTENANCE

General Maintenance Practices

To maintain maximum engine protection and ensure maximum service life, periodically inspect air cleaner, hoses and connections.

1. Unlatch, raise and prop hood open.

2. Assure inlet hose between upper radiator support and air cleaner and outlet hose between air cleaner and turbo–charger are not cracked or punctured and hose connections are secure (Fig. 43). Replace or repair, as necessary.

3. Inspect air cleaner body for damage which could contribute to an air leak. Replace body, if damaged.

4. Insure dust cup/body area is completely sealed (Fig. 43).

5. Make sure mounting screws and nuts securing air cleaner in place are tight.

6. Be sure inlet opening in upper radiator support is free of obstructions.

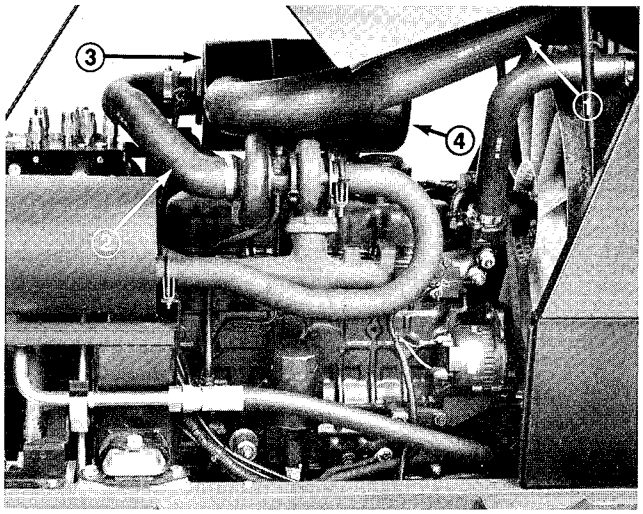

Figure 43
1. Inlet Hose
2. Outlet Hose
3. Air Cleaner Body
4. Dust Cup

Servicing Dust Cap and Baffle

Once each week or every 50 hours operation, inspect and clean the dust cup and rubber baffle. However, daily or more frequent inspection is necessary when operating conditions are extremely dusty and dirty (Fig. 44).

Note: In extremely dusty, dirty conditions, begin to establish a criteria as to how often the dust cup should be emptied by checking dust cup and baffle after each day's operation. Base further maintenance requirements on this figure.

1. Unlatch, raise and prop hood open.

2. Loosen thumb screw until dust cup and baffle can be removed (Fig. 44). Separate baffle from dust cup (Fig. 44).

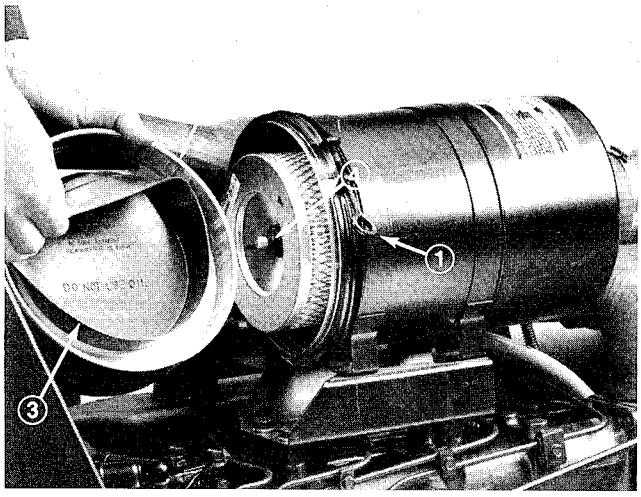

Figure 44
1. Thumb Screw
2. Dust Cup
3. Rubber Baffle
4. Wing nut w/ gasket
5. Air Cleaner Body

3. Dump material out of dust cup and clean cup and baffle. Reassemble parts together and secure to air cleaner body.

MAINTENANCE

Servicing Air Cleaner Filter

Every 200 hours, or more frequently in extreme dusty, dirty conditions, service the air cleaner filter by washing or use of compressed air. After every five cleanings (1000 hours), or yearly, replace the element.

1. Unlatch, raise and prop hood open.

2. Service dust cup assembly; refer to Servicing Dust Cup and Baffle above.

3. Remove wing nut w/gasket and slide filter element out of air cleaner body (Fig. 45).

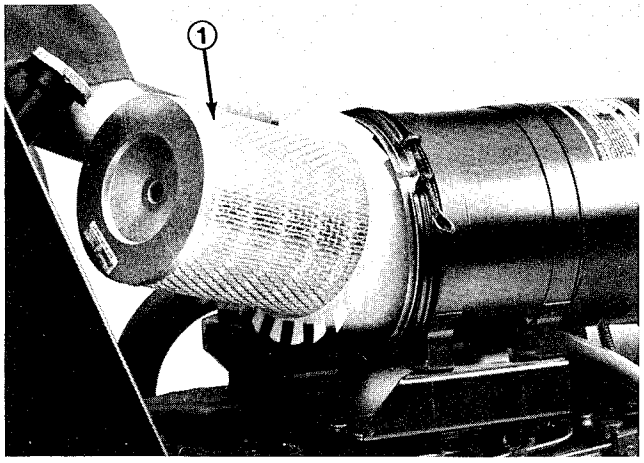

Figure 45
1. Filter Element

4. Clean element by washing it in a solution of filter cleaner (Toro Part No. 27–7220) and water, or use compressed air.

Note: When element must be used immediately after servicing, compressed air is recommended as a washed element must be dried before use. However, washing the element is better than cleaning with compressed air. The filter must be washed if exhaust soot is lodged in the filter pores.

Washing Method

IMPORTANT: Do not remove plastic fin assembly because washing removes dust from beneath fins.

A. Prepare a solution of filter cleaner and water and soak filter element about 15 minutes. For complete information, refer to directions on filter cleaner carton.

B. After filter soaks for 15 minutes, rinse it with clear water. To prevent damaging the filter element, do not exceed 40 psi (276 kPa) water pressure.

C. Use warm, flowing air to dry element – 160° F (71° C) max. – or allow element to air–dry. Do not use compressed air or a light bulb to dry the element because it could be damaged.

Compressed Air Method

IMPORTANT: Do not remove plastic fin assembly because back blowing with compressed air removes dust from beneath fins.

A. Blow compressed air from inside to outside of dry filter element. To prevent damage to the element, do not exceed 100 psi (689 kPa).

B. Keep air nozzle at least one inch (25 mm) from pleated paper and, while rotating element, move nozzle up and down. After dirt and dust are removed, inspect element; refer to Inspecting Filter Element below.

5. Use a damp cloth to wipe excess dust from inside air cleaner body. Install filter element and secure it in place with wing nut and gasket.

6. Install dust cup and baffle, tighten thumb screw securely and close and latch hood.

Inspecting Filter Element

1. Place bright light inside filter.

2. Slowly rotate filter and check for cleanliness, ruptures, holes and tears. Replace if it will not filter properly.

3. Inspect fin assembly, gasket and screen for damage. Replace filter if damage is evident.

HYDRAULIC SYSTEM SERVICE

Listed below are hydraulic oil brands recommended for the 580–D. All are interchangeable with one another.

Mobil	DTE 26
Shell	Tellus 68
Amoco	Rykon Oil #68
Conoco	Super Hydraulic Oil 68
Exxon	Nuto H 68
Kendall	Kenoil R & O AW 68
Pennzoil	Penreco 68
Phillips	Magnus A 68
Standard	Energol HLP 68
Sun	Sunvis 831 WR
Union	Unax AW 68

IMPORTANT: Use only hydraulic oils specified. Other fluids could cause system damage.

Note: A red dye additive for the hydraulic system oil is available in 2/3 oz (20 ml) bottles. One bottle is sufficient for 4–6 gal (15–23 l) of hydraulic oil. Order Part No. 44–2500 from your Authorized Toro Distributor.

MAINTENANCE

Check Oil Level

1. Visually check hydraulic oil level daily through sight glass (Fig. 46). With machine on a level surface, oil should be in the middle of the sight glass when warm and slightly below level when cold.

2. If oil needs to be added, clean area thoroughly around the fill cap before removing cap (Fig. 46). Add oil until proper level is indicated in sight glass.

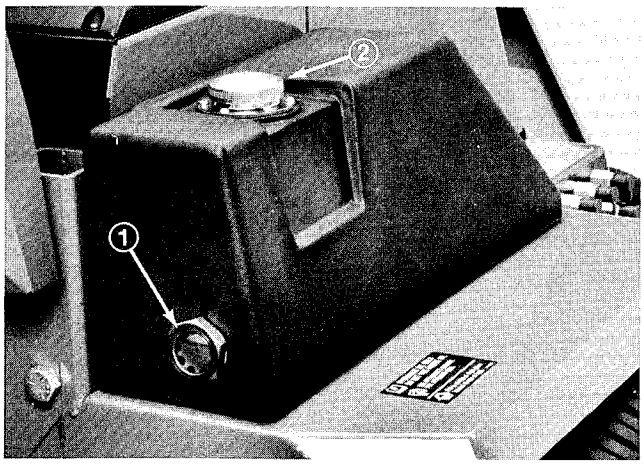

Figure 46
1. Hydraulic Oil Level Sight Glass 2. Reservoir Fill Cap

Replace Hydraulic Filter (Initial)

After 50 hours initial operation, replace the hydraulic filter (Toro Part No. 69–1720).

1. Place drain pan under filter and remove filter (Fig. 47).

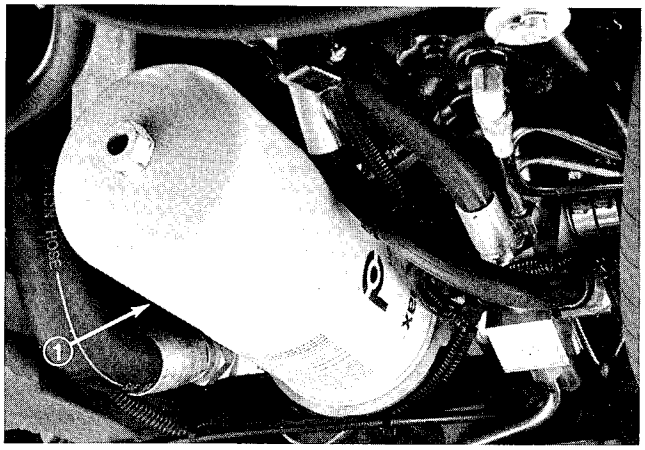

Figure 47
1. Hydraulic Oil Filter

2. Coat O–ring of the replacement filter with clean hydraulic oil before installing.

3. To tighten filter, hand turn filter element onto filter head until element is firmly seated against the head.

4. Start engine and check for leaks. Check oil level after engine has been stopped. Add oil, if necessary.

Inspect Lines and Fittings

Every 100 hours operation inspect all hoses, lines and fittings for signs of leakage or damage (blisters, cut hoses, etc.)

CAUTION: Replace any suspect hoses or lines immediately to prevent machine damage or personal injury.

CAUTION

Keep body and hands away from pin hole leaks or nozzles that eject hydraulic fluid under high pressure. Use paper or cardboard, not hands, to search for leaks. Hydraulic fluid escaping under pressure can have sufficient force to penetrate skin and do serious damage. If fluid is injected into the skin it must be surgically removed within a few hours by a doctor familiar with this form of injury or gangrene may result.

Replace Hydraulic Filter

Every 500 hours operation, replace the filter element; refer to Replace Hydraulic Filter.

Drain Water From Hydraulic Reservoir

Every 500 hours operation, drain water from reservoir at three (3) locations.

1. Place drain pan under reservoir.

2. Locate plugs at right rear behind front wheel, at rear center and front center of reservoir (Fig. 48).

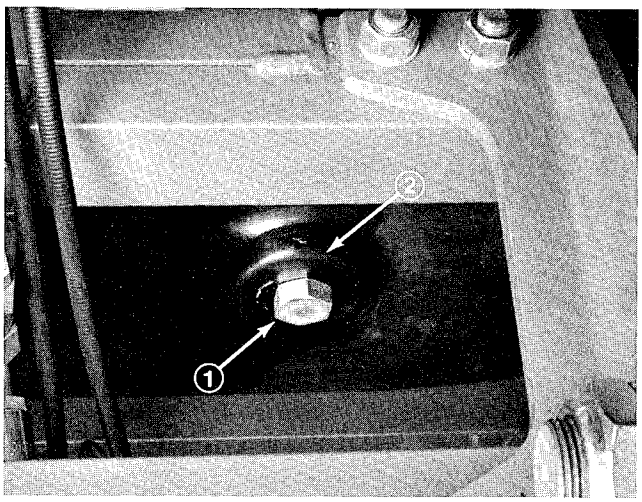

Figure 48
1. Drain Plug–Front Center 2. Hydraulic Reservoir

3. Open each plug approximately one turn. Allow fluid to drain until only hydraulic oil is draining and re–tighten plug.

4. Check hydraulic oil level. Add oil, as necessary.

Drain Hydraulic Reservoir

Every 1000 hours operation, or yearly, drain and replace hydraulic fluid in reservoir. Total system capacity is approximately 40 gal (151 l); reservoir capacity is approximately 32 gal (121 l).

Note: If oil becomes contaminated (oil appears milky or black), the system must be flushed. Contact your local TORO distributor for assistance.

1. Place drain pan under reservoir. In turn, remove all three (3) drain plugs and let oil drain into pan (Fig. 48).

2. Inspect O−rings on plugs and replace, if damaged. Install drain plugs.

3. With machine on level surface, fill reservoir with hydraulic oil until oil level is midway up in sight glass (Fig. 46).

4. Install reservoir cap. Start engine and use all hydraulic controls to distribute oil throughout the system. Check for leaks. If repairs are needed, shut engine off before beginning.

5. Recheck oil level; add if necessary.

Hydraulic System Breather

During normal operating conditions, replace the hydraulic system oil breather every 1000 hours operation, or yearly. Replace breather more frequently in extremely dusty, dirty conditions.

1. Release latches, open hood and prop it open with rod.

2. Breather is located along right side of radiator (Fig. 49). Clean area around it, unscrew it with a wrench and install replacement.

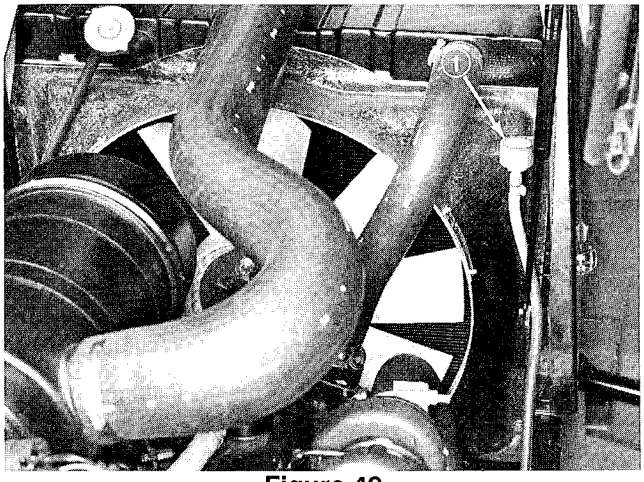

Figure 49
1. Hydraulic System Breather

3. Close and latch hood.

Hydraulic System Test Ports

The test ports (Fig. 50) are used for testing the hydraulic circuits. Contact your local TORO distributor for assistance on use of these components.

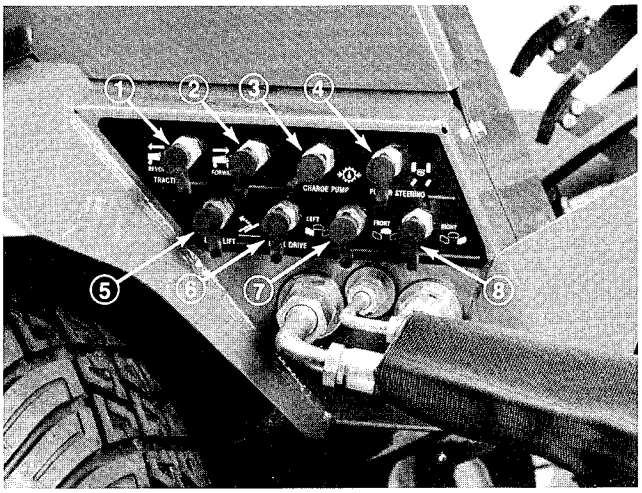

Figure 50

1. Traction − Reverse
2. Traction − Forward
3. Charge Pump
4. Steering Circuit
5. Deck Lift
6. Left Cutting Unit
7. Front Cutting Unit
8. Right Cutting Unit

PLANETARY GEAR DRIVE SERVICE

Change oil initially after 50 hours operation and every 800 hours, or yearly. Use high quality SAE 80−90 wt. gear lube as replacement. Check oil if leakage is noted.

To check oil level:

1. With machine on level surface, position wheel so the check/drain plug is at either three or nine o'clock position (Fig. 51).

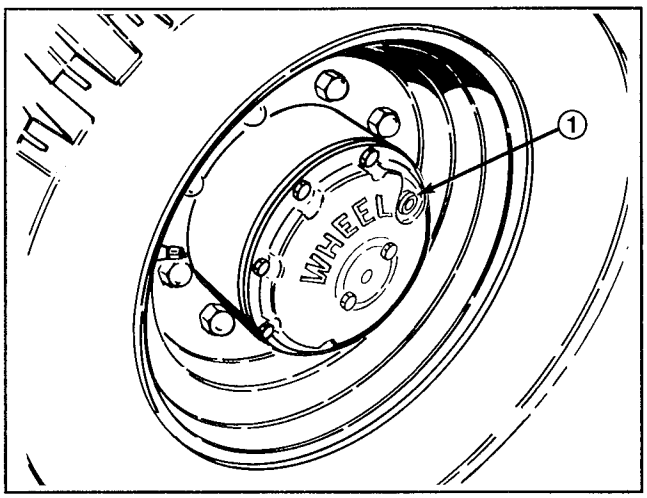

Figure 51
1. Check/Drain Plug (3 or 9 o'clock position)

2. Remove plug. Oil should be to bottom of the hole.

3. Add gear oil, if necessary, to bring up to proper level and install plug.

4. Repeat steps 1−3 on the opposite gear assembly.

To Drain Gear Oil:

1. With machine on level surface, position wheel so the check/drain plug is at lowest position.

2. Place drain pan under hub, remove plug and allow oil to drain.

3. When oil has drained, position wheel so plug hole is at three or nine o'clock position (Fig. 51).

4. Add approximately 32 oz (1.24 l) high quality SAE 80–90 wt. gear lube to bring level up to bottom of hole and install plug.

5. Repeat steps 1–4 on the opposite gear assembly.

BATTERY SERVICE

IMPORTANT: Before welding on the machine or performing service to the electrical system, disconnect negative (–) battery cable from the batteries to prevent damage to the electrical system.

Check battery cables and connections every 100 hours and check batteries with a hydrometer every 500 hours operation. Keep terminals and entire battery case clean. Clean batteries with a solution of baking soda and water, then rinse with clear water. To prevent corrosion, coat battery posts and cable connectors with Grafo 112X (Skin–over) grease, TORO Part No. 505–47.

CAUTION

Wear safety goggles and rubber gloves when working with the batteries. Charge batteries in a well–ventilated place so gases produced while charging can dissipate. Since the gases are explosive, keep electrical spark and open flame away from the batteries. Do not smoke. Nausea may result if the gases are inhaled. Unplug charger from electrical outlet before connecting to or disconnecting charger leads from battery posts.

1. Unlatch, raise and prop hood open. Unlatch and remove left engine side panel.

2. Remove capscrews securing battery tray to machine and slide tray out (Fig. 52).

3. Check both batteries for charge with a hydrometer. If batteries check acceptably, slide tray back in place, secure with capscrews and install side panel. If batteries require charging, proceed to step 4.

4. Remove negative (–) battery cable connectors from batteries (Fig. 52). Connect a 3 to 4 Amp battery charger to the posts. Charge the batteries at a rate of 3 to 4 Amperes for 4 to 8 hours.

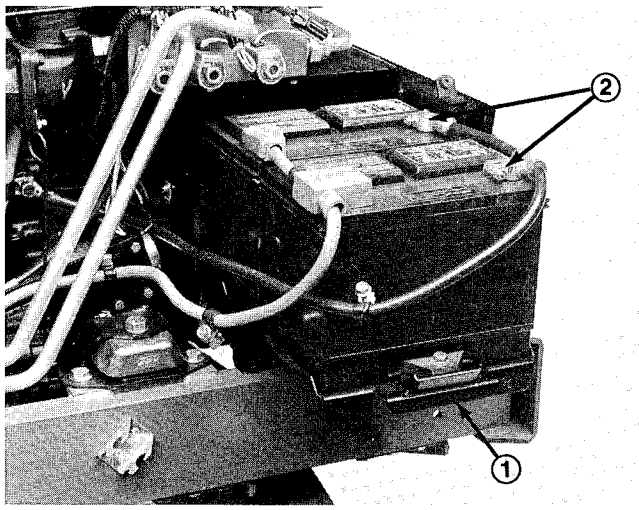

Figure 52
1. Battery Tray 2. Negative (–) Cable Connectors

5. When batteries are fully charged, disconnect charger from electrical outlet and battery posts.

6. Connect negative (–) cable ends, slide tray back in place, and secure with capscrews. Install side panel, close hood and secure both with latches.

FUSES & CIRCUIT BREAKER

One 5 Amp, two 15 Amp fuses and a 40 Amp circuit breaker with reset button for protection of the entire wiring circuit are located under the control panel to the right of the seat (Fig. 53). If total loss of electrical function occurs, find and correct the malfunction before pressing the button.

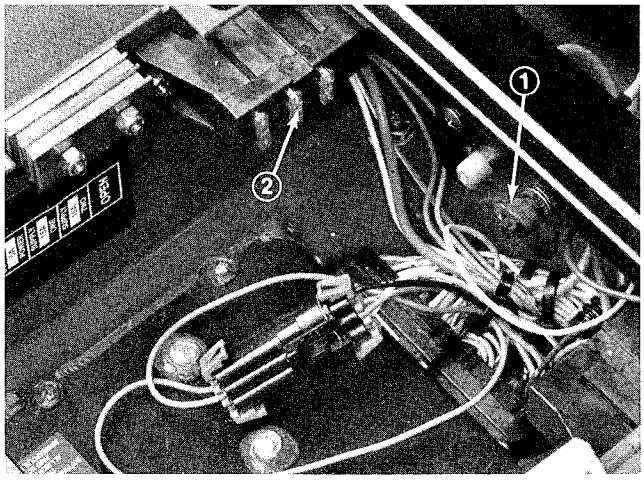

Figure 53
1. Circuit Breaker Reset Button
2. Fuse Block

IMPORTANT: Do not install fuses in fuse block on left side of instrument control panel. Fuses should be installed in this fuse block only if machine is equipped with a road light kit.

MAINTENANCE

BRAKE SYSTEM SERVICE

Check brake fluid level every 50 hours operation. Replace fluid every 1000 hours operation, or yearly. Replenish system with DOT 3 hydraulic brake fluid. To check fluid level:

1. Raise floor panel in front of seat (Fig. 54). Remove tool tray.

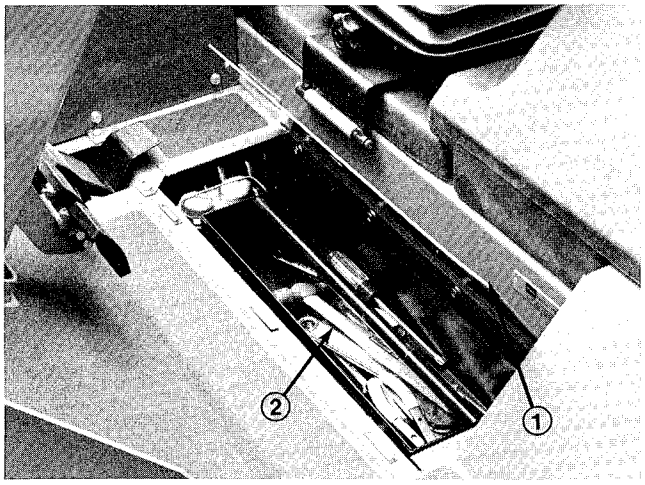

Figure 54
1. Floor Plate 2. Tool Tray

2. Snap cover bail off cover and remove cover from master cylinder (Fig. 55).

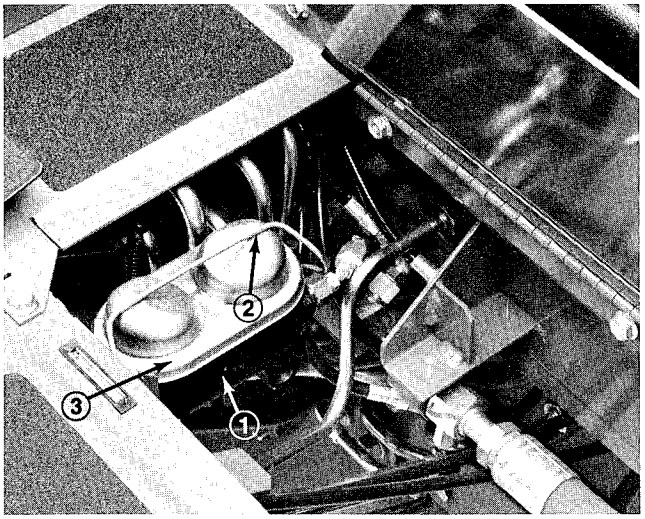

Figure 55
1. Master Cylinder 3. Reservoir Cover
2. Cover Bail

WHEELS AND TIRES

Torque Wheel Nuts

After the first ten (10) hours operation, check torque on the wheel nuts and every 200 hours thereafter.

1. Torque lug nuts for front wheels 60–70 ft–lb (81–95 N m).

2. Torque lug nuts for rear wheels to 30–35 ft–lb (41–47 N m).

Check Tire Pressure

Since the Groundsmaster 580–D can be operated under many different types of turf conditions, proper tire pressure is very important. Check tire condition and pressure daily and use the following guide to maintain maximum turf conditions:

Under **Normal** mowing conditions and when used on a wide variety of turf grasses – 15 psi (103.4 kPa) front; 13 psi (89.6 kPa) rear.

When turf is **wet** and softer than normal – use low tire pressure: 12 psi (82.7 kPa) front and 9 psi (62 kPa) rear.

When turf is **dry** and harder than normal, use high pressure: 18 psi (124 kPa) front and rear.

IMPORTANT: Do not operate in HIGH RANGE for extended periods when tire pressure is less than 20 psi (138 kPa) because tires may be damaged. When tire pressure exceeds 20 psi (138 kPa), HIGH RANGE may be used.

CUTTING UNIT LUBRICATION

Follow guidelines in the Lubrication Chart to properly maintain the units. To gain access to the center and inner spindle shaft fittings on each outboard unit, proceed as follows:

Note: To grease spindle bearings, apply 2–3 pumps with a hand grease gun for each spindle.

1. Position machine on level surface, lower cutting units to shop floor, engage parking brake, shut engine off and remove key from ignition switch.

2. Remove the inner deck pulley cover (Fig. 56).

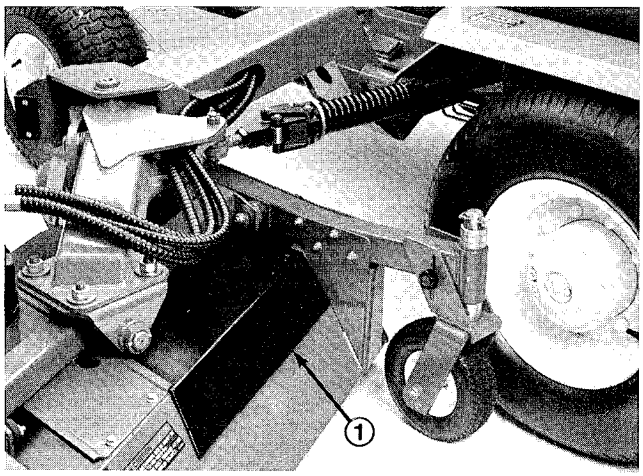

Figure 56
1. Inner Cover

3. Use belt to rotate inner and center spindle pulleys until grease fittings can be accessed with a grease gun.

4. Grease fittings and replace cover.

MAINTENANCE

BLADE MAINTENANCE

Note: Although not needed for normal maintenance procedures, the front cutting unit can be pivoted (tilted) to a fully upright position (Fig. 57). Should you desire to tilt the cutting unit, proceed as follows:

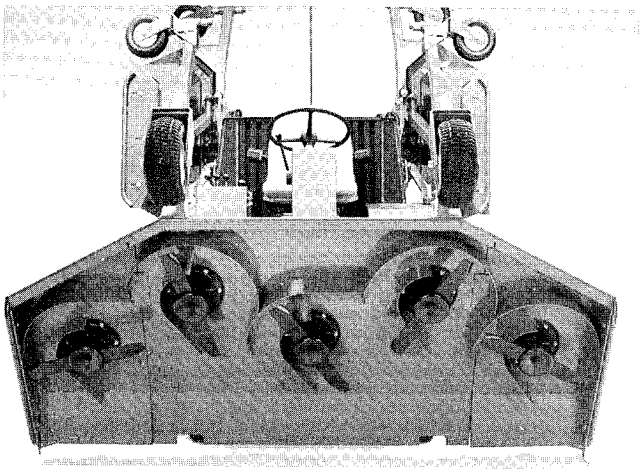

Figure 57

To Pivot (Tilt) Cutting Unit Upright:

1. Position front cutting unit so rear castor wheels just clear the floor, set parking brake and shut engine off.

2. Remove deck tilt link from tool box under traction unit floor (Fig. 54) and klik pins from weldments on traction unit frame and cutting unit lift arm.

3. Remove hairpin cotters and clevis pins from the (2) rear castor assemblies (Fig. 58). Set the left hand clevis pin aside and insert the right hand clevis pin into the most forward holes in the castor wheel arm on the right side of the unit (Fig. 59). The castor arm and pin should be resting on top of the unit.

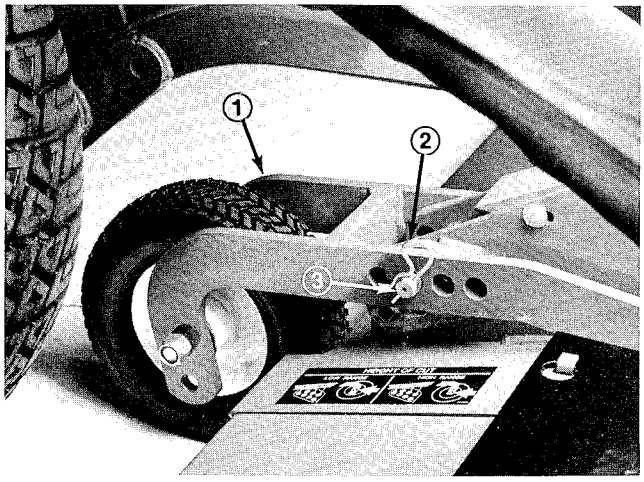

Figure 58

1. Rear Castor wheel Assembly
2. Hair Pin Cotter
3. Clevis Pin

4. Sit on seat, start the engine and raise the cutting unit to the full up position so the spring latch on the left lift arm disengages from the cutting unit. Stop the engine and remove the key from the ignition switch.

5. Fit deck tilt link over weldment on the right side of traction unit and secure with klik pin. Position link so it clears when cutting unit is raised. Keep remaining klik pin handy to secure opposite end of link to cutting unit arm weldment (Fig. 59).

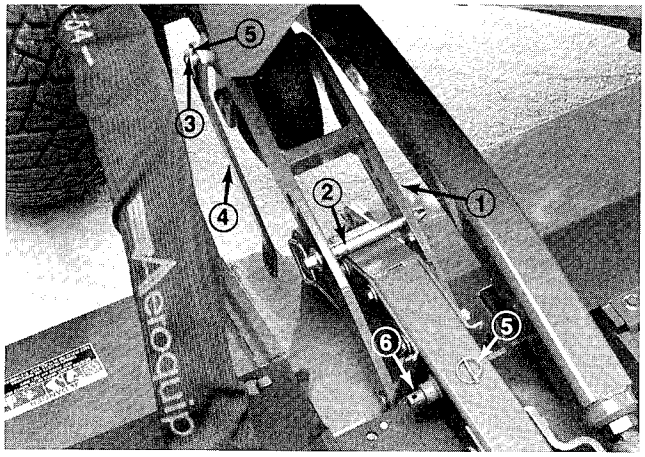

Figure 59

1. Right Rear Castor Wheel Assembly
2. Clevis Pin
3. Weldment
4. Deck Tilt Link
5. Klik Pin (2)
6. Cutting Unit Arm Weldment

6. Use at least one other person to tilt the cutting unit. Grasp the front of the unit and lift it to an upright position (Fig. 57).

7. Hold the unit upright, fit link end over pin on cutting unit lift arm weldment and secure with klik pin.

CAUTION

The cutting unit is too heavy for one person to pivot up or down. Use at least one other person to assist in lifting or lowering the unit. Always use proper lifting techniques and hold unit securely when pivoting it up or down.

To Pivot Cutting Unit down into Operating Position:

1. With the help of an assistant, hold the unit upright, remove the klik pin securing the link end and remove link end from the weldment.

2. Pivot (tilt) the cutting unit downward.

3. Sit on seat, start engine and lower the cutting unit so castor wheels just clear the floor.

4. Remove the height–of–cut pin from the right castor wheel arm. Insert it and the left height–of–cut pin in the proper height–of–cut holes in the castor arms and cutting unit.

MAINTENANCE

BLADE BOLT TORQUE

Check blade bolt torque daily or after blade strikes a solid object. However, if solid object causes blade to be damaged or bent to a degree it is unusable, replace it; refer to Removing Cutting Unit Blade, below.

1. Raise cutting units to transport position, engage parking brake, shut engine off and remove key from ignition switch.

2. Using a torque wrench and rag or thickly padded glove to hold blade, torque blade bolts on all cutting units to 140–165 ft–lb (190–224 N m).

REMOVING CUTTING UNIT BLADE

Replace the blade if a solid object is hit, the blade is out of balance or bent. Always use genuine TORO replacement blades to ensure safety and optimum performance. Never use blades made by other manufacturers because they could be dangerous.

CAUTION

Do not try to straighten a bent blade. Never weld a broken or cracked blade. Always use a new TORO blade to assure continued safety certification of the product.

1. Raise cutting unit to transport position, engage parking brake, shut the engine off and remove key from ignition.

2. Using a rag or thickly padded glove, grasp end of blade. Remove blade bolt, lockwasher, anti–scalp cup and blade from spindle assembly (Fig. 60).

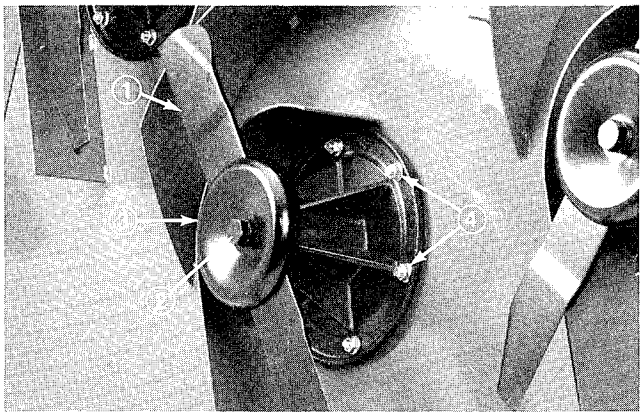

Figure 60

1. Cutting Blade
2. Blade bolt and Lockwasher
3. Anti – Scalp Cup
4. Carriage Bolt and Flange Locknut (6)

3. When re–assembling, make sure blade sail is facing up. Torque the blade bolt to 140–165 ft–lb (190–224 N m).

INSPECTING AND SHARPENING BLADE

1. Raise cutting units to transport position, engage parking brake, shut engine off and remove key from ignition switch.

2. Carefully examine cutting ends of the blade, especially where the flat and sail (curved part) meet (Fig. 61A). Since sand and abrasive material can wear the metal connecting the flat and sail portions, check the blade before using the machine. If any wear is noticed (Fig. 61B), replace the blade: refer to Removing Cutting Unit Blade above.

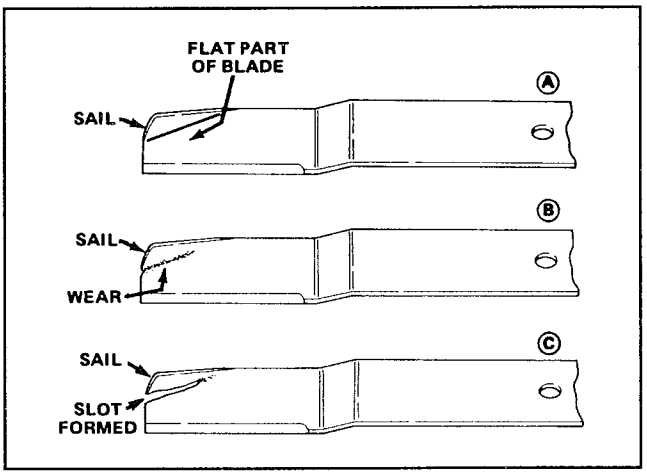

Figure 61

CAUTION

If the blade is allowed to wear, a slot will form between the sail and flat part of the blade (Fig. 61C)). Part of the blade may eventually break off and be thrown from under the housing, possibly resulting in serious injury to yourself or bystanders.

3. Examine cutting edges of all blades. Sharpen cutting edges that are dull or nicked. To assure sharpness, sharpen only the top side of the cutting edge while maintaining the original cutting angle (Fig. 62). If the same amount of metal is removed from both cutting edges, the blade will remain balanced.

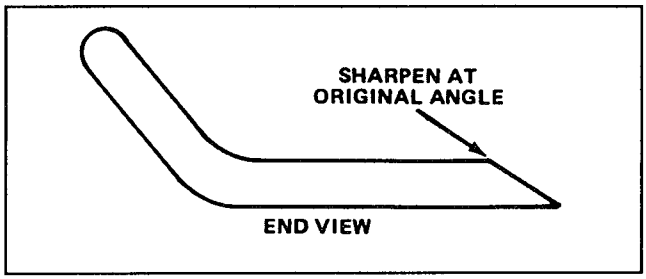

Figure 62

4. To check blade for being straight and parallel, remove from cutting unit. Lay blade on level surface and check its ends. Blade ends must be slightly lower than blade center and cutting edge lower than heel of the blade. If so, it will produce good quality–of–cut and require minimal engine power to turn. By contrast, a blade with ends higher than blade center, or with cutting edge higher than the blade heel, is warped or bent and must be replaced.

5. When re–assembling, make sure blade sail is facing up. Torque the blade bolt to 140–165 ft–lb.

INSPECTING AND ADJUSTING CUTTING UNIT BELT TENSION

IMPORTANT: After first ten hours of operation, check new belts for proper tension; thereafter, check tension every 50 hours.

Front Cutting Unit –

Note: Belts for wing unit spindles are tensioned by spring loaded idlers and normally do not require tensioning.

1. Position machine on level surface, lower cutting unit to shop floor, engage parking brake, shut engine off and remove key from ignition switch.

2. Remove deck covers.

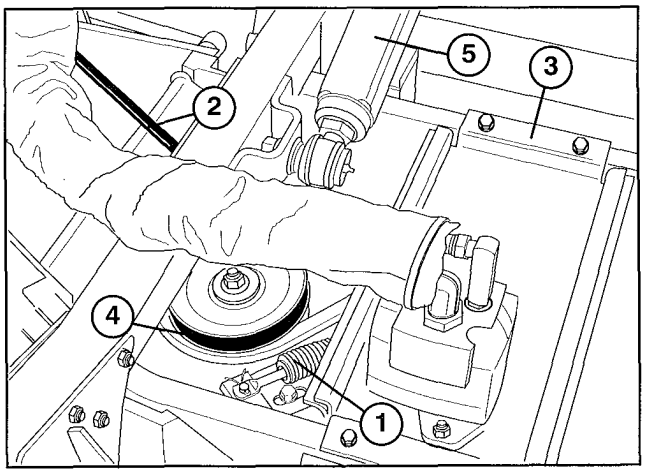

Figure 63
1. Compression Spring and Tension Plate
2. Wing Unit Drive Belt
3. Gear Box Plate
4. Center Drive Belt
5. Lift Arm

3. Note position of shoulder bolts in slots in tension plate. Optimum belt tension will be maintained when the flanges on the shoulder bolts are 1/8 in. (3 mm) from the pulley ends of the slots (Fig. 64). If the shoulder bolt flanges are more than 3/8 in. (9 mm) from the pulley end of the slots, an adjustment should be made.

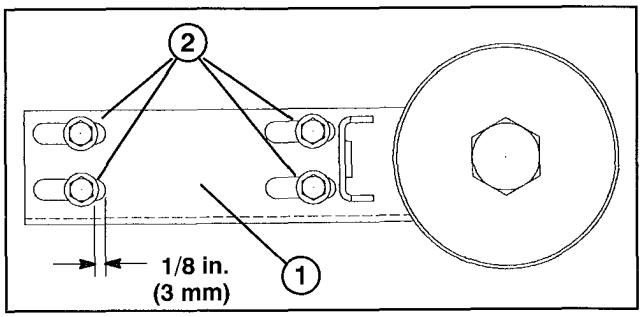

Figure 64
1. Tension Plate 2. Shoulder Bolts

4. To adjust, loosen jam nuts (Fig. 65) and extend tension arm until the shoulder bolt flanges are within 1/8 in. (3 mm) of the pulley end of the slots (Fig. 64).

Note: When the shoulder bolt flanges are positioned 1/8 in. (3 mm) from the pulley end of the slots, the length of the compression spring (Fig. 63) will be approximately 5 in. (127 mm).

5. Tighten jam nuts to secure adjustment. Replace covers.

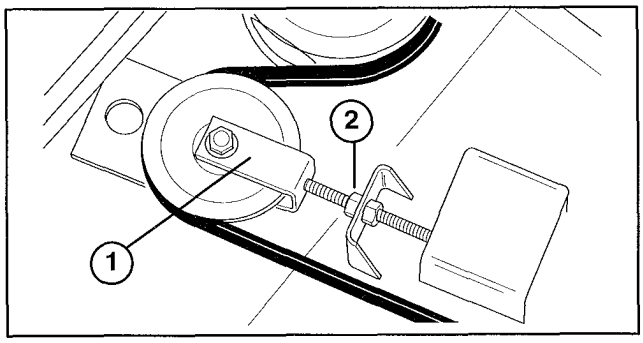

Figure 65
1. Tension Arm 2. Jam Nuts

Outboard Cutting Units –

1. Remove deck covers. To check belt tension, apply 8 lb. (35.5 N) force at mid–span of belt and check deflection. There should be approximately 5/16 in. (7.9 mm) deflection. If deflection is incorrect, proceed to step 2. If deflection is correct, proceed to step 3.

2. To tension belts, loosen flange locknut at top of idler pulley (Fig. 66). Slide pulley against belt until proper tension is reached. Hold pulley in position and tighten locknut.

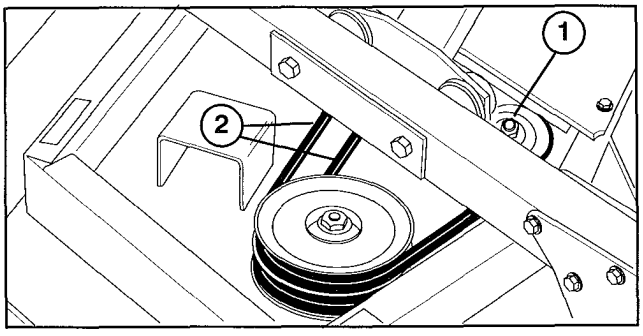

Figure 66
1. Idler Pulley Flange Locknut
2. Drive Belts

3. Replace deck covers.

MAINTENANCE

REPLACING BLADE DRIVE BELTS

Position machine on level surface, lower cutting unit to shop floor, engage parking brake, shut engine off and remove key from ignition switch.

Front Cutting Unit –

Note: To remove center section belt, wing spindle drive belts must first be removed.

1. Remove deck covers. Lift each wing to release idler pulley tension and slip belt off pulleys.

2. Loosen jam nuts securing tension plate until compression spring on idler assembly is relaxed (Fig. 65).

3. Remove idler pulley belt retainer.

4. Remove flange head screws securing gearbox plate and separate plate and drive motor assembly from the deck (Fig. 63). Be careful not to bend, twist, kink or damage flexible hydraulic lines.

5. Remove old belt. Position new belt in pulleys and assemble gear box and plate assembly to deck.

6. Adjust belt tension; refer to Adjusting Cutting Unit Belt Tension.

7. Install idler pulley belt retainer.

8. Install wing drive belts. Lift wings to allow belts to slip over outer drive spindle pulleys and install covers.

Outboard Cutting Units –

Note: To remove lower belt, the other two belts must first be removed.

1. Position machine on level surface, lower cutting unit to shop floor, engage parking brake, shut engine off and remove key from ignition switch.

2. Remove deck covers. Loosen flange locknuts on idler pulleys and slide pulleys away from belts.

3. Remove flange head screws securing gearbox plate to deck. To separate plate and drive motor assembly from deck, rotate plate end toward traction unit (Fig. 66). Tip plate, motor and pulley assembly on its side and remove from deck. Be careful not to bend, twist, kink or damage flexible hydraulic lines.

4. Remove belt(s). Position new belt(s) in pulleys and assemble gear box and plate assembly to deck.

5. Adjust belt tension; refer to Adjusting Cutting Unit Belt Tension.

SEPARATING CUTTING UNITS FROM TRACTION UNIT

Front Cutting Unit –

1. Position machine on level surface, lower cutting unit to shop floor, engage parking brake, shut engine off and remove key from ignition switch.

2. Remove deck covers and relieve belt tension on all belts (Fig. 65).

3. Remove flange head screws securing gearbox plate and separate plate and drive motor assembly from the deck (Fig. 63). Be careful not to bend, twist, kink or damage flexible hydraulic lines.

4. Remove hex head screws and flange locknuts securing each lift arm to the castor arm and separate from the arm (Fig. 63).

5. Roll the cutting unit away from the traction unit.

6. To re–install cutting unit, assemble in reverse order.

Outboard Cutting Units –

1. Position machine on level surface, lower cutting unit to shop floor, engage parking brake, shut engine off and remove key from ignition switch.

2. Remove deck covers and relieve belt tension on all belts (Fig. 66).

3. Remove flange head screws securing gearbox plate to deck. To separate plate and drive motor assembly from deck, rotate plate end toward traction unit (Fig. 67). Tip plate, motor and pulley assembly on its side and remove from deck. Be careful not to bend, twist, kink or damage flexible hydraulic lines.

4. Remove locknut securing deck pivot shaft into deck clevis and lift bar (Fig. 67).

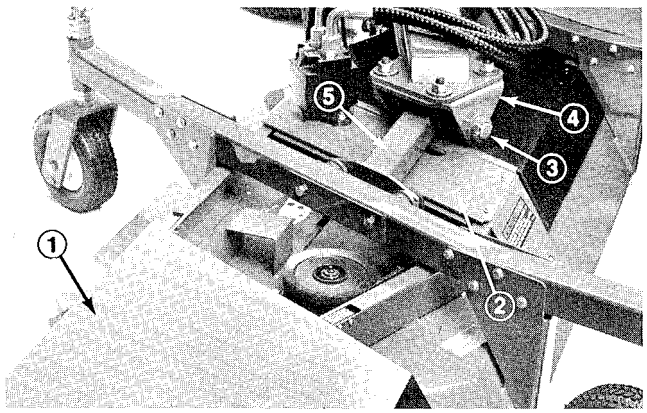

Figure 67

1. Deck Cover
2. Gearbox Plate
3. Deck Pivot Shaft
4. Deck Clevis
5. Lift Bar

5. Move the cutting unit away from the machine.

6. To re–install cutting unit, assemble in reverse order.

MAINTENANCE

CHECKING AND CORRECTING CUTTING BLADE MISMATCH

If there is mismatch between the blades, the grass will appear streaked when it is cut. This can be corrected by ensuring all blades are straight and cutting on the same plane.

1. Adjust cutting unit to highest height–of–cut. Position castor wheel axles in lower castor fork holes (Fig. 68, 69). If checking front cutting unit, reposition two rear castor's clevis pins to highest height–of–cut setting (Fig. 68). On the front castors, move all castor spacers to the underside of the castor arms (Fig. 68). To check outboard units, move all castor shaft spacers to the underside of the castor arms and castor wheel axles to lower castor fork holes.

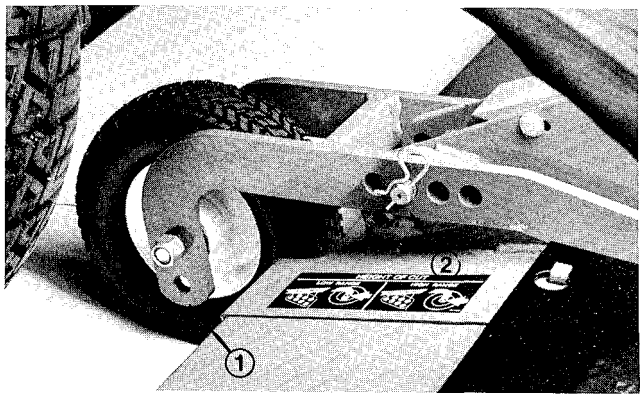

Figure 68
1. High Range Height–of–Cut
2. Move to Highest Height–of–Cut Setting

2. Place a flat 4 X 8 sheet of plywood at least 3/4 in. (20 mm) thick down on a level surface and lower the cutting unit onto the flat surface.

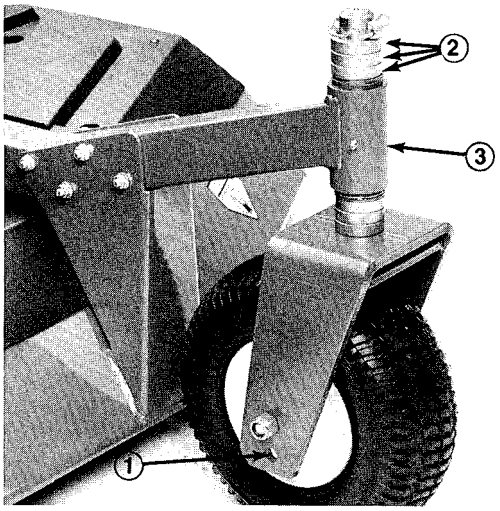

Figure 69
1. High Range Height–of–Cut
2. Move to Underside of Castor Arm
3. Castor Arm

3. Rotate blade so ends face fore and aft. Measure from flat surface to front tip of cutting blade and record dimension. Rotate same blade so opposite end faces forward and repeat measurement. Difference between the two measurements must not exceed 1/8 in. (3 mm). If difference exceeds 1/8 in.(3 mm), the blade is bent. Replace it. Use same procedures to measure all blades.

4. Rotate blade so ends face fore and aft. Measure from flat surface to front of cutting blade and record dimension. Repeat process with all blades and compare measurements. Maximum difference allowed between any two adjacent blades is 1/4 in. (6 mm). Maximum difference allowed between the highest and lowest blade measurement is 3/8 in.(10 mm). If measurements do not fit recommended standards, add shims between the cutting deck and spindle housing; proceed to step 6. If measurements meet standards, proceed to step 5.

5. Rotate blades so tips line up with one another. Tips of adjacent blades must be within 1/8 in.(3 mm) of each other. If tips are not within 1/8 in. (3 mm) of one another, add shims between spindle housing and bottom of cutter deck; proceed to step 6.

6. Remove locknuts securing spindle housing to deck in area where shims are to be added. To lower a blade, add a shim (Part No. 3256–24), to each mounting bolt, between spindle housing and cutter deck. Repeat step 5. Continue process until blade tips are within the required dimensions.

IMPORTANT: Do not exceed three shims at any one hole location. If more than one shim is added to any one hole location, install decreased amounts of shims in adjacent holes.

ADJUSTING WINGLET STABILIZERS

If front winglet decks bounce excessively when in transport, an adjustment to the winglet stabilizers is required.

1. Park machine on a level surface, engage parking brake, lower front deck completely to the ground and turn the engine OFF.

2. Loosen capscrews securing winglet stabilizer brackets to deck and move brackets outward.

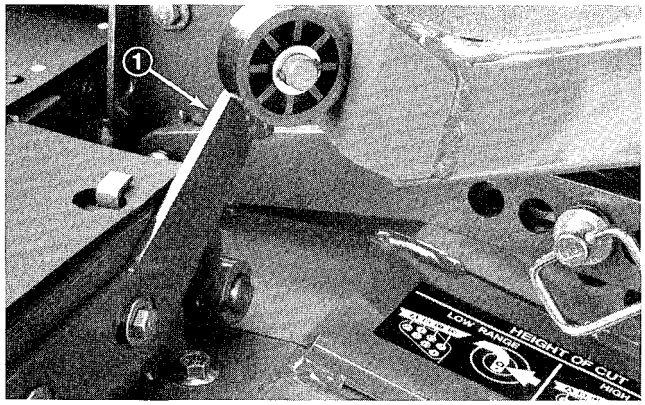

Figure 70
1. Winglet stabilizer brackets

3. Start engine and raise front deck completely, then stop engine.

4. Move stabilizer brackets inward until rollers contacts skirt of machine, then tighten capscrews locking adjustment.

TRACTION CONTROL NEUTRAL ADJUSTMENT

If machine moves when traction pedal and pump lever are in neutral position, adjustment is required.

1. Park machine on a level surface, engage parking brake, raise wing decks completely, lower front deck to the ground and turn the engine OFF.

2. Actuate pump lever (with foot pedal) to make sure that foot pedal and linkage operate freely. Correct if necessary.

3. Put blocks at front and rear of all four wheels. Disengage the two (2) planetary wheel drives; refer to Pushing or Towing Machine, page 22.

CAUTION

Failure to put machine on a level surface, block wheels and disengage planetary wheel drives before doing neutral adjustment procedure could result in personal injury from machine movement.

4. With engine OFF, loosen nut on carriage bolt and allow bearing to locate cam (Fig. 71). Carefully tighten nut on carriage bolt.

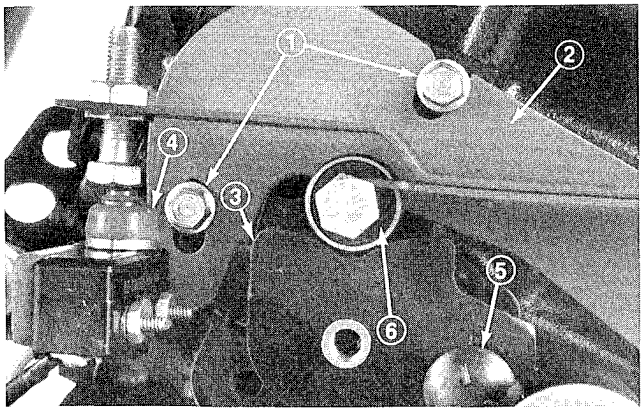

Figure 71

1. Screws
2. Neutral Device Bracket
3. Cam
4. Neutral Switch
5. Carriage Bolt
6. Bearing

5. Loosen screws to allow neutral device bracket to move; but not freely (Fig. 70). Adjust neutral device bracket so that 40± in–lb of torque on control lever just starts to rotate lever. Tighten screws.

6. Adjust neutral switch; refer to Traction (Neutral) Switch replacement and Adjustment, page 41.

7. Adjust Traction Control Rod; refer to Traction Control Rod Adjustment, page 41.

8. If movement is still evident when traction pedal and pump lever are in neutral contact your local authorized TORO Distributor for assistance.

TRACTION (NEUTRAL) SWITCH ADJUSTMENT

1. Make sure traction pedal is in neutral position. Loosen jam nut and rotate switch adjusting screw until there is a gap between head of screw and switch button (Fig. 72).

2. Rotate adjusting screw until it contacts the switch button. Continue to rotate screw until circuit is completed (switch "clicks"). After switch clicks, rotate adjusting screw an additional 1 turn. Tighten jam nut.

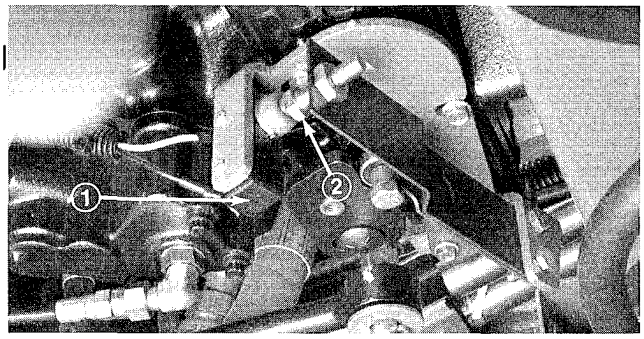

Figure 72

1. Traction (neutral) Switch
2. Adjusting Screw

3. Actuate traction pedal in both FORWARD ana REVERSE to assure that switch "clicks" in both directions.

TRACTION CONTROL ROD ADJUSTMENT

1. Park machine on a level surface, engage parking brake, raise wing decks completely, lower front deck to the ground and turn the engine OFF.

2. Remove cotter pin and slotted nut from ball joint at traction pedal (Fig. 73). Disconnect ball joint from traction pedal.

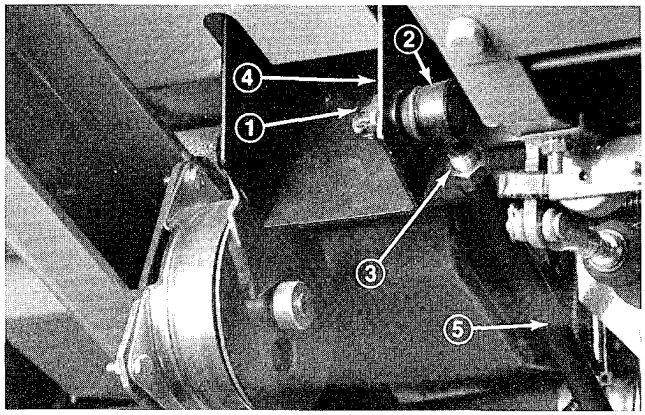

Figure 73

1. Cotter pin and Slotted Nut
2. Ball joint
3. Jam Nut
4. Traction Pedal
5. Control Rod

3. Loosen jam nut and adjust ball joint so that when control rod is all the way back, front of traction pedal hits the floor. Tighten jam nut.

4. Connect ball joint to traction pedal. Tighten slotted nut until ball joint it tight against traction pedal then loosen nut until next slot aligns with hole in ball joint and install cotter pin.

CYLINDER HEAD BOLTS

Re–torque initially after 50 operating hours and check every 1000 operating hours or annually thereafter.

ENGINE VALVE CLEARANCE

Adjust initially at 50 operating hours and check every 500 operating hours or annually thereafter.

ELECTRICAL SCHEMATIC

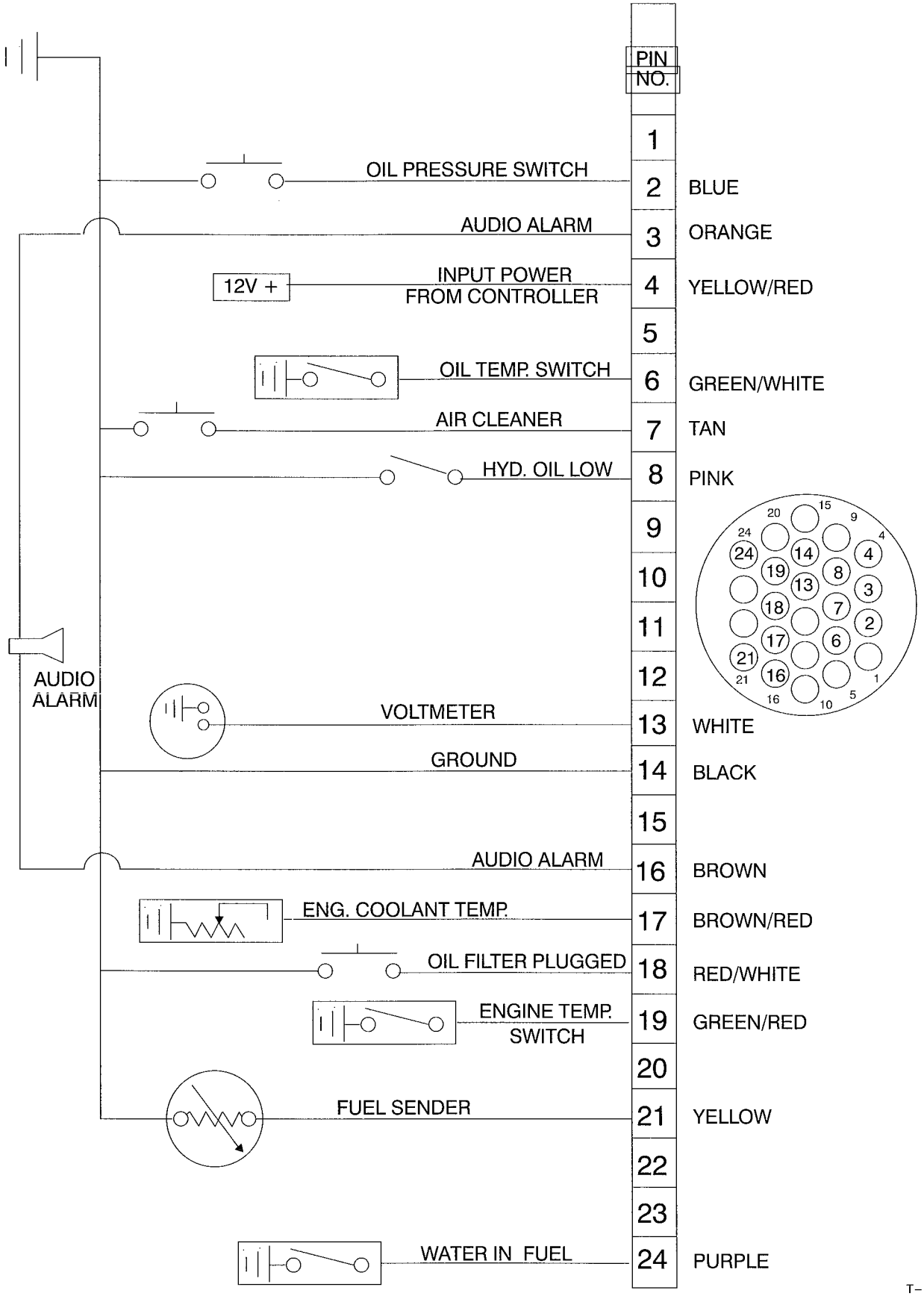

CONTROLLER ELECTRICAL SCHEMATIC

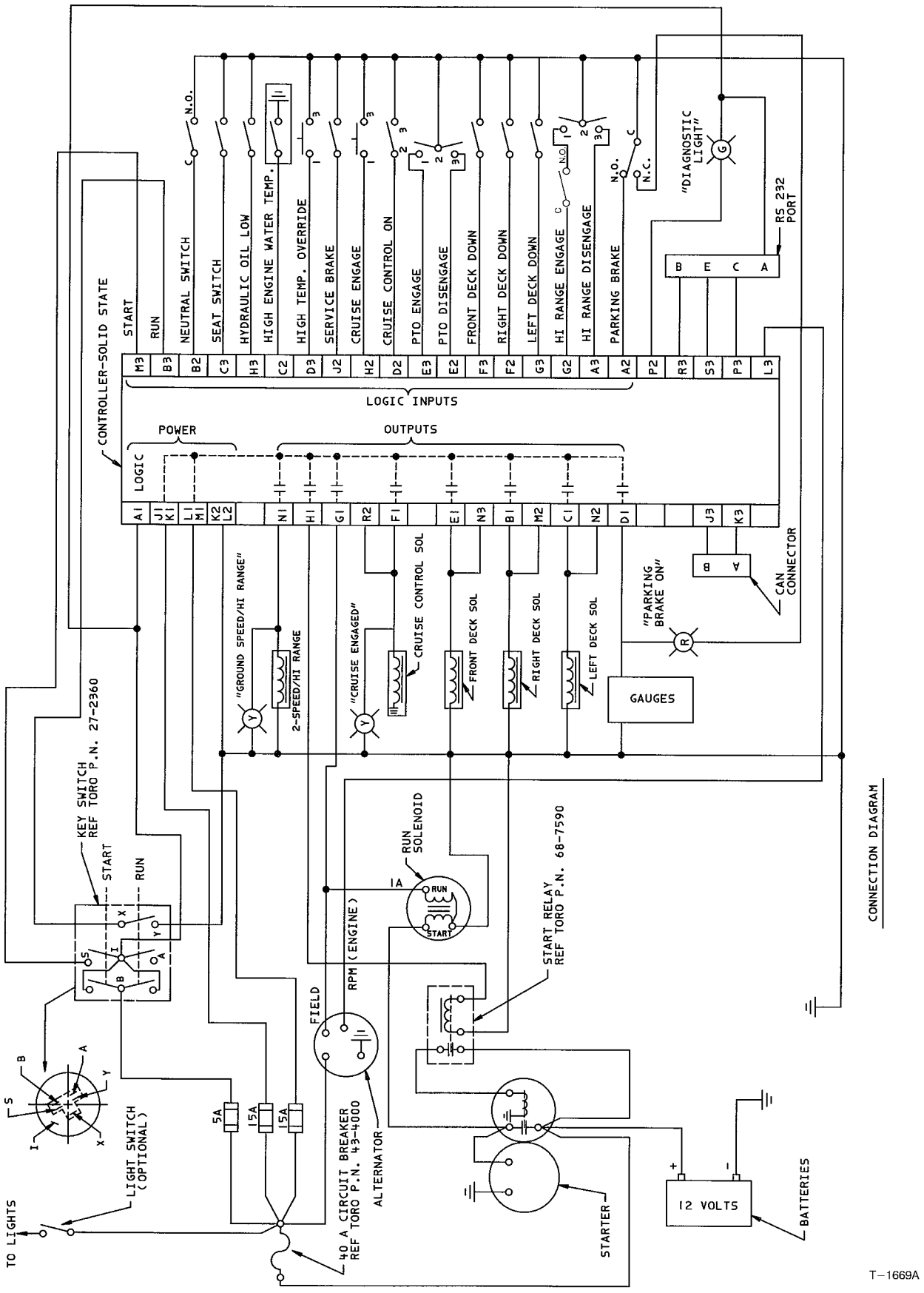

HYDRAULIC SCHEMATIC

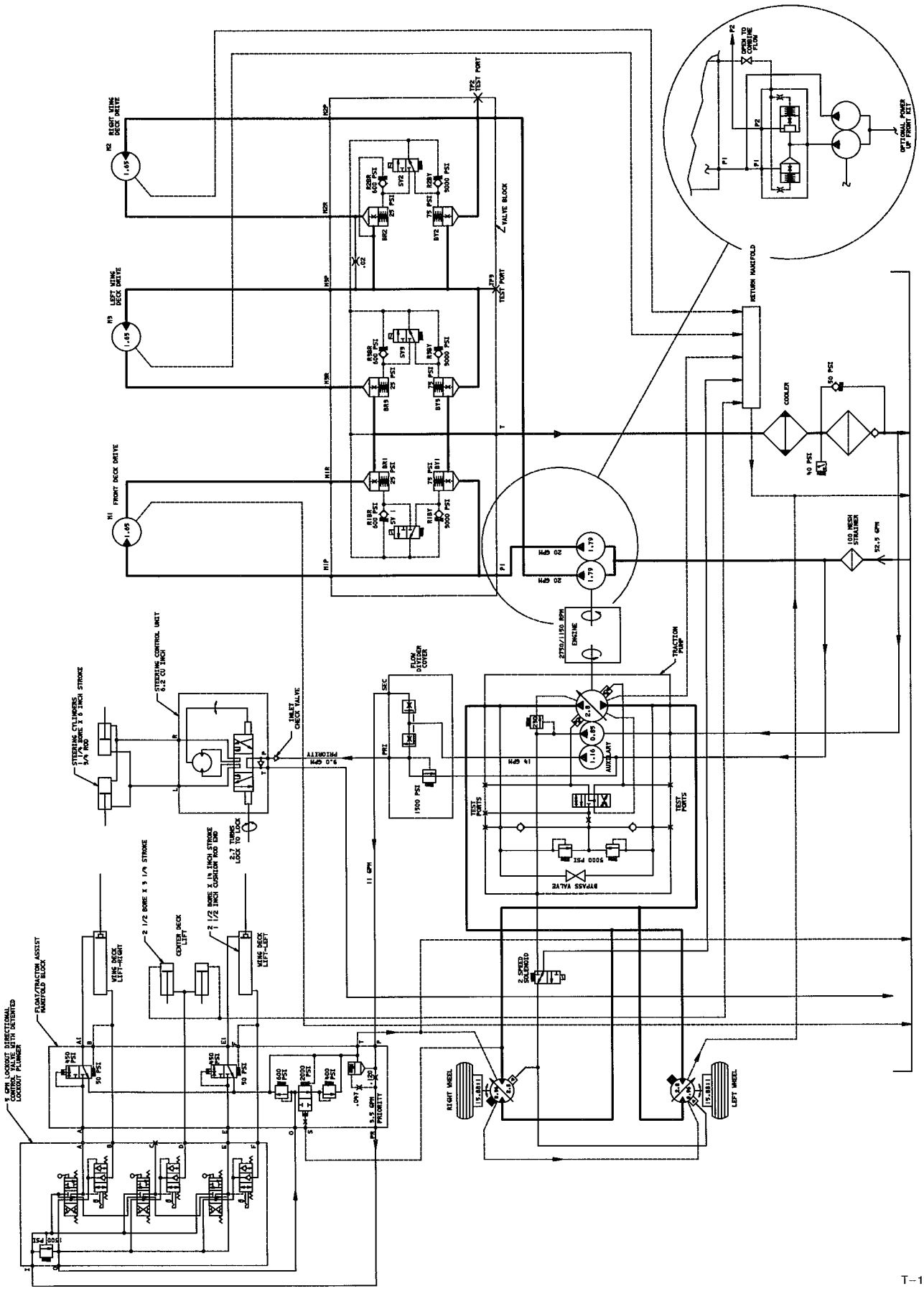

T-1656

MAINTENANCE SCHEDULE

Minimum Recommended Maintenance Intervals

Maintenance Procedure	Maintenance Interval & Service				
	Every 50hrs	Every 100hrs	Every 200hrs	Every 400hrs	Every 800hrs
Lubricate All Grease Fittings					
Inspect Air Filter, Dust Cup, and Baffle					
Clean Under Cutting Unit Belt Covers					
Check Cutting Unit Drive Belt Adjustment					
‡ Change Engine Oil and Replace Filter					
† Check Fan and Alternator Belt Tension					
Inspect Cooling System Hoses					
Service Air Filter					
Replace Fuel/Water Separator Filter					
† Torque Wheel Lug Nuts					
Check Battery Level/Cable Connections					
‡ Replace Hydraulic Filter					
‡ Torque Head and Adjust Valves					
‡ Check Engine RPM (idle and full throttle)					
‡ Change Planetary Gear Drive Fluid					
Check Rear Wheel Toe–In					

† Initial break in at 10 hours

‡ Initial break in at 50 hours

Change Brake Fluid
Change Fuel Filter
Change Thermostat
Replace Safety Switches
Flush Cooling System and Replace Hoses
Fuel Tank– Drain/Flush
Change Hydraulic Oil

Annual Recommendations:
Items listed are recommended every 1000 hours or 2 years, whichever occurs first.

PRODUCT IDENTIFICATION

MODEL AND SERIAL NUMBERS

A plate containing two identification numbers, a model and serial number, is affixed to the traction unit on the left bulkhead below the operator's seat and on the rear channel of each cutting unit. In correspondence regarding the machine, supply the model and serial number to assure correct information and replacement parts are obtained.

To order parts from an authorized TORO Distributor, please provide:

1. Model and serial numbers of the component in question.

2. Part number, description and quantity of parts desired.

Note: Do not order by reference number. If a parts catalog is being used, use the part number.

The Toro Commercial Products Two Year Limited Warranty

The Toro Company warrants your 1996 or newer Toro Hydroject® 3000, Hydroject® 4000, Greens, or Fairway Aerator ("Product") purchased after January 1, 1997, to be free from defects in materials or workmanship for the period of time listed below*. Where a warrantable condition exists, Toro will repair the Product at no cost to you including diagnosis, labor, parts, and transportation. This warranty begins on the date the Product is delivered to the original retail purchaser.

Warranty Duration: Two years or 500 operational hours*, whichever occurs first.

****Contract usage and shared ownership limited to 120 days. *Product equipped with hour meter.**

Owner Responsibilities:

As the Product owner, you are responsible for required maintenance and adjustments stated in your Owner's Manual. Failure to perform required maintenance and adjustments can be grounds for disallowing a warranty claim.

Instructions for Obtaining Warranty Service:

You are responsible for notifying the Commercial Products Distributor or Authorized Commercial Products Dealer from whom you purchased the Product as soon as you believe a warrantable condition exists.

If you need help locating a Commercial Products Distributor or Authorized Dealer, or if you have questions regarding your warranty rights or responsibilities, you may contact us at:

Toro Commercial Products Service Department
8111 Lyndale Avenue South
Minneapolis, MN, 55420–1196
Telephone: (612) 888–8801
Facsimile: (612) 887–8258
E–Mail: Commercial.Service@Toro.Com

Maintenance Parts:

Parts scheduled for replacement as required maintenance ("Maintenance Parts"), are warranted for the period of time up to the scheduled replacement time for that part.

Items/Conditions Not Covered:

Not all product failures or malfunctions that occur during the warranty period are defects in materials or workmanship. The items / conditions listed below are not covered by this warranty:

- Product failures which result from the use of non–Toro replacement parts, or from installation and use of add–on, modified, or unapproved accessories are not covered.
- Product failures which result from failure to perform required maintenance and/or adjustments are not covered.
- Product failures which result from operating the Product in an abusive, negligent or reckless manner are not covered.
- This warranty does not apply to parts subject to consumption through use unless found to be defective. Examples of parts which are consumed, or used up, during normal Product operation include, but are not limited to, blades, reels, bedknives, tines, spark plugs, castor wheels, tires, filters, belts, etc.
- This warranty does not apply to failures caused by outside influence. Items considered to be outside influence include, but are not limited to, weather, storage practices, contamination, use of unapproved coolants, lubricants, additives, or chemicals, etc.
- This warranty does not apply to normal "wear and tear" items. Normal "Wear and Tear" includes, but is not limited to, damage to seats due to wear or abrasion, worn painted surfaces, scratched decals or windows, etc.

Other Legal Disclaimers:

The above remedy of product defects through repair by an authorized distributor or dealer is the purchaser's sole remedy for any defect. This warranty gives you specific legal rights, and you may also have other rights which vary from state to state.

Except for the Emissions warranty referenced below, if applicable, there is no other express warranty. All implied warranties of merchantability and fitness for use are limited to the duration of the express warranty.

Some states do not allow limitations on how long an implied warranty lasts, so the above limitation may not apply to you.

The Toro Company is not liable for indirect, incidental or consequential damages in connection with the use of the Product, including any cost or expense of providing substitute Product or service during periods of malfunction or non–use.

Some states do not allow the exclusion of incidental or consequential damages, so the above exclusion may not apply to you.

Note to California residents: The Emissions Control System on your Product may be covered by a separate warranty meeting requirements established by the U.S. Environmental Protection Agency (EPA), or the California Air Resources Board (CARB). The hour limitations set forth above do not apply to the Emissions Control System Warranty. Refer to the California Emission Control Warranty Statement printed in your Owner's Manual or contained in the engine manufacturer's documentation for details.