Form No. 3376-634 Rev A

53cm Recycler® Lawn Mower

Model No. 20995—Serial No. 313000001 and Up

Model No. 20996—Serial No. 313000001 and Up

Operator's Manual

Introduction

This rotary-blade, walk-behind lawn mower is intended to be used by residential homeowners. It is designed primarily for cutting grass on well-maintained lawns on residential properties. It is not designed for cutting brush or for agricultural uses.

Read this information carefully to learn how to operate and maintain your machine properly and to avoid injury and equipment damage. You are responsible for operating the machine properly and safely.

You may contact Toro directly at www.Toro.com for product and accessory information, help finding a dealer, or to register your product.

Whenever you need service, genuine Toro parts, or additional information, contact an Authorized Service Dealer or Toro Customer Service and have the model and serial numbers of your machine ready. Figure 1 identifies the location of the model and serial numbers on the product.

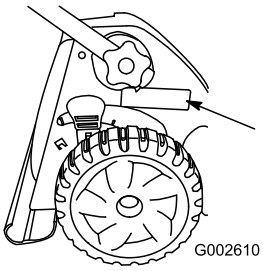

Figure 1

1. Model and serial number location

Write the product model and serial numbers in the following space:

Model No. _____

Serial No. _____

This manual identifies potential hazards and has safety messages identified by the safety alert symbol (Figure 2), which signals a hazard that may cause serious injury or death if you do not follow the recommended precautions.



Figure 2

1. Safety alert symbol

This manual uses 2 words to highlight information. **Important** calls attention to special mechanical information and **Note** emphasizes general information worthy of special attention.

This product complies with all relevant European directives. For details, see the separate product-specific Declaration of Conformity (DOC) sheet.

For models with stated engine horsepower, the gross horsepower of the engine was laboratory rated by the engine manufacturer in accordance with SAE J1940. As configured to meet safety, emission, and operating requirements, the actual engine horsepower on this class of lawn mower will be significantly lower.

Do not tamper with the engine controls or alter the governor speed; doing so may create an unsafe condition resulting in personal injury.

Contents

Introduction 1
Safety 2
General Lawn Mower Safety 2
Sound Pressure 3
Sound Power 3
Hand/Arm Vibration 3
Safety and Instructional Decals 4
Setup 5
1 Unfolding the Handle 5
2 Installing the Recoil-starter Rope in the Rope Guide 6
3 Filling the Engine with Oil 6
4 Install the Mulch Plug or the Grass Bag 7
Product Overview 8
Specifications 9
Operation 9
Filling the Fuel Tank 9
Checking the Engine Oil Level 9
Adjusting the Cutting Height 10
Adjusting the Upper Handle Height 10
Starting the Engine 11

© 2012—The Toro® Company
8111 Lyndale Avenue South
Bloomington, MN 55420

Register at www.Toro.com.

CE

Original Instructions (EN)
Printed in the USA
All Rights Reserved
3376-634 A

Using the Self-propel Drive....12
Using the Self-propel Drive....12
Stopping the Engine....12
Mulching the Clippings....12
Bagging the Clippings....13
Side-discharging the Clippings....14
Operating Tips....15
Maintenance....16
Recommended Maintenance Schedule(s)....16
Preparing for Maintenance....16
Replacing the Air Filter....16
Changing the Engine Oil....17
Lubricating the Wheel Gears....18
Lubricating the Upper Handle....18
Adjusting the Self-propel Drive Cable....18
Adjusting the Self-propel Drive Cable....19
Replacing the Blade....19
Cleaning the Underside of the Machine Housing....20
Storage....21
Preparing the Machine for Storage....21
Folding the Handle....21
Folding the Handle....21
Removing the Machine from Storage....22
Testing the Machine Safety System....22

Safety

Improperly using or maintaining this mower can result in injury. To reduce the potential for injury, comply with these safety instructions.

Toro designed and tested this machine for reasonably safe service; however, failure to comply with the following instructions may result in personal injury.

To ensure maximum safety, best performance, and to gain knowledge of the product, it is essential that you and any other operator of the mower read and understand the contents of this manual before the engine is ever started. Pay particular attention to the safety alert symbol (Figure 2), which means Caution, Warning, or Danger—"personal safety instruction." Read and understand the instruction because it has to do with safety. Failure to comply with the instruction may result in personal injury.

General Lawn Mower Safety

The following instructions have been adapted from EN 836.

This cutting machine is capable of amputating hands and feet and of throwing objects. Failure to observe the following safety instructions could result in serious injury or death.

Training

- Read the instructions carefully. Be familiar with the controls and the proper use of the equipment.
- Never allow children or people unfamiliar with these instructions to use the mower. Local regulations can restrict the age of the operator.
- Keep in mind that the operator or user is responsible for accidents or hazards occurring to other people or their property.
- Understand explanations for all pictograms used on the mower or in the instructions.

Gasoline

WARNING-Gasoline is highly flammable. Take the following precautions.

- Store fuel in containers specifically designed for this purpose.
- Refuel outdoors only and do not smoke while refueling.
- Add fuel before starting the engine. Never remove the cap of the fuel tank or add gasoline while the engine is running or when the engine is hot.
- If gasoline is spilled, do not attempt to start the engine but move the mower away from the area of spillage and avoid creating any source of ignition until gasoline vapors have dissipated.
- Replace all fuel tank and container caps securely.

Preparation

- While mowing, always wear substantial footwear and long trousers. Do not operate the equipment when barefoot or wearing open sandals.
- Thoroughly inspect the area where the equipment is to be used and remove all stones, sticks, wires, bones and other foreign objects.
- Before using, always visually inspect to see that guards, and safety devices, such as deflectors and/or grass catchers, are in place and working correctly.
- Before using, always visually inspect to see that the blades, blade bolts and cutter assembly are not worn or damaged. Replace worn or damaged blades and bolts in sets to preserve balance.

Starting

- Do not tilt the mower when starting the engine unless the mower has to be tilted for starting. In this case, do not tilt it more than absolutely necessary and lift only the part which is away from the operator.
- Start the engine carefully according to instructions and with feet well away from the blade(s) and not in front of the discharge chute.

Operation

- Never mow while people, especially children, or pets are nearby.
- Mow only in daylight or in good artificial light.
- Stay alert for holes in the terrain and other hidden hazards.

- Do not put hands or feet near or under rotating parts. Keep clear of the discharge opening at all times.
- Never pick up or carry a lawn mower while the engine is running.
- Use extreme caution when reversing or pulling a pedestrian controlled lawn mower towards you.
- Walk, never run.
- Slopes:
  - Do not mow excessively steep slopes.
  - Exercise extreme caution when on slopes.
  - Mow across the face of slopes, never up and down, and exercise extreme caution when changing direction on slopes.
  - Always be sure of your footing on slopes.
- Reduce speed on slopes and in sharp turns to prevent overturning or loss of control.
- Stop the blade if the lawn mower has to be tilted for transportation when crossing surfaces other than grass and when transporting the lawn mower to and from the area to be mowed.
- Do not operate the engine in a confined space where dangerous carbon monoxide fumes can collect.
- Stop the engine
  - whenever you leave the lawn mower.
  - before refueling.
  - before removing the grass catcher.
  - before making height adjustment unless adjustment can be made from the operator's position.
- Stop the engine and disconnect the spark-plug wire.
  - before clearing blockages or unclogging chute.
  - before checking, cleaning or working on the lawn mower.
  - after striking a foreign object, inspect the lawn mower for damage and make repairs before restarting and operating the lawn mower.
  - if lawn mower starts to vibrate abnormally (check immediately).
- Lightning can cause severe injury or death. If you see lightning or hear thunder in the area, do not operate the machine; seek shelter.
- Watch out for traffic when crossing or near roadways.

Maintenance and Storage

- Keep all nuts, bolts, and screws tight to be sure the equipment is in safe working condition.
- Do not use pressure-cleaning equipment on machine.
- Never store the equipment with gasoline in the tank and inside a building where fumes can reach an open flame or spark.
- Allow the engine to cool before storing in any enclosure.
- To reduce the fire hazard, keep the engine, silencer, battery compartment and gasoline storage area free of grass, leaves, or excessive grease.
- Check grass catcher components and the discharge guard frequently and replace with manufacturer's recommended parts, when necessary.
- Replace worn or damaged parts for safety.
- Replace faulty silencers.
- If the fuel tank has to be drained, do this outdoors.
- Do not change the engine governor settings or overspeed the engine. Operating an engine at excessive speed can increase the hazard of personal injury.
- Be careful during adjustment of the lawn mower to prevent entrapment of the fingers between moving blades and fixed parts of the lawn mower.
- **To ensure the best performance and safety, purchase only genuine Toro replacement parts and accessories. Do not use *will fit* parts and accessories; they may cause a safety hazard.**

Sound Pressure

This unit has a sound pressure level at the operator's ear of 89 dBA, which includes an Uncertainty Value (K) of 1 dBA.

The sound pressure level was determined according to the procedures outlined in EN 836.

Sound Power

This unit has a guaranteed sound power level of 98 dBA, which includes an Uncertainty Value (K) of 1 dBA.

The sound power level was determined according to the procedures outlined in ISO 11094.

Hand/Arm Vibration

Measured vibration level for right hand = 5.1 m/s

Measured vibration level for left hand = 4.8 m/s

Uncertainty Value (K) = 2.0 m/s2

Measured values were determined according to the procedures outlined in EN 836.

Safety and Instructional Decals

Important: **Safety and instruction decals are located near areas of potential danger. Replace damaged decals.**

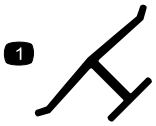

Manufacturer's Mark

1. Indicates the blade is identified as a part from the original machine manufacturer.



108-7450

1. Height of cut



108-7451

1. Height of cut

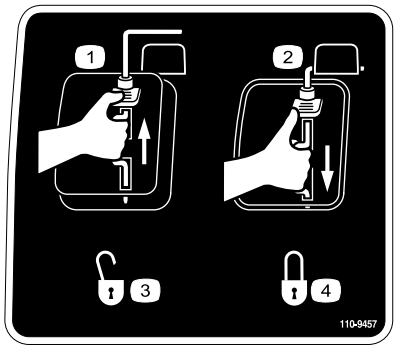

110-9457

1. Engine switch Off
2. Engine switch On
3. Unlocked
4. Locked

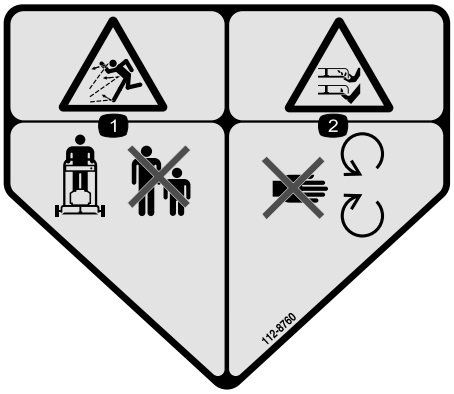

112-8760

1. Thrown object hazard—keep bystanders a safe distance from the machine.
2. Cutting/dismemberment of hand or foot—stay away from moving parts.



114-7982

1. Warning—read the *Operator's Manual*.
2. Thrown object hazard—keep bystanders a safe distance from the machine.
3. Cutting/dismemberment hazard of hand or foot, mower blade—disconnect the spark plug wire and read the instructions before servicing or performing maintenance.
4. Cutting/dismemberment hazard of hand or foot, mower blade—stay away from moving parts.
5. Cutting/dismemberment hazard of hand or foot, mower blade—do not operate up and down slopes; operate side to side on slopes; stop the engine before leaving the operating position; and look behind you when backing up.

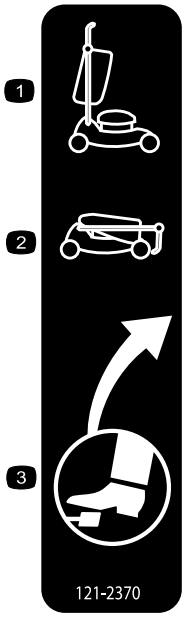

121–2370

1. Handle in raised position
2. Handle in lowered position
3. Foot pedal location

Setup

Important: **Remove and discard the protective plastic sheet that covers the engine.**

1

Unfolding the Handle

No Parts Required

Procedure

1. Unfold the handle as illustrated in Figure 3 and Figure 4.

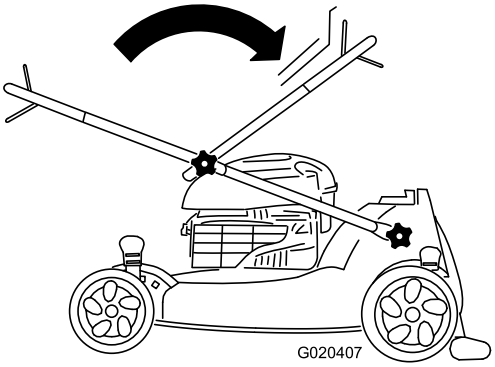

Figure 3

Model 20995 shown

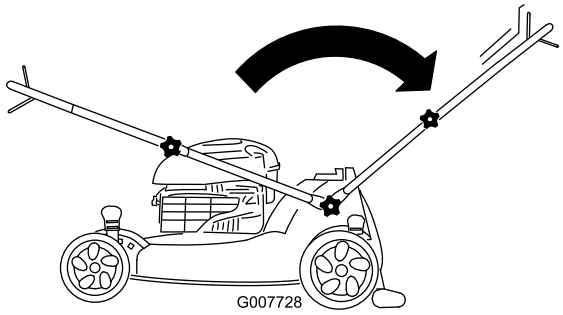

Figure 4

Model 20995 shown

2. Tighten all handle knobs.
3. Move the upper handle to the desired position and tighten the upper handle knob firmly (model 20996 only) (Figure 5).

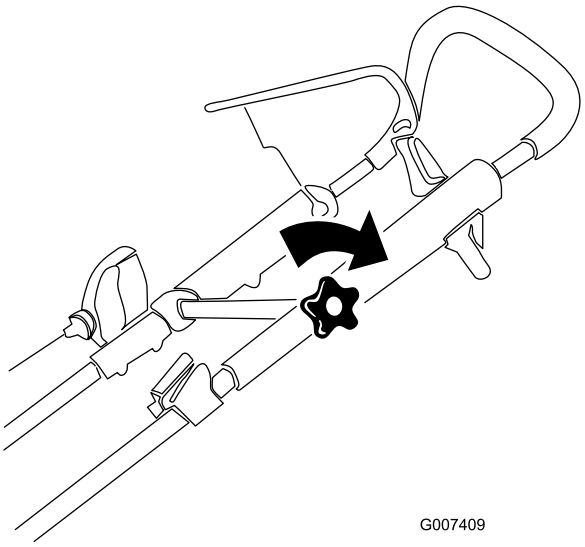

Figure 5

2

Installing the Recoil-starter Rope in the Rope Guide

No Parts Required

Procedure

Important: You must install the recoil-starter rope in the rope guide.

Hold the blade-control bar to the upper handle and pull the recoil-starter rope through the rope guide on the handle (Figure 6).

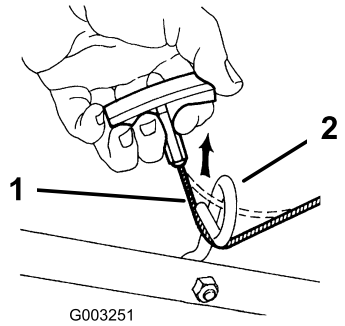

Figure 6

1. Recoil-starter rope
2. Rope guide

3

Filling the Engine with Oil

No Parts Required

Procedure

Important: This machine does not come with oil in the engine. Before starting the engine, fill the engine with oil.

Important: Change the engine oil after the first 5 operating hours; change it yearly thereafter. Refer to Changing the Engine Oil (page 17).

1. Move the machine to a level surface.
2. Remove the dipstick (Figure 7) and pour about 3/4 of the crankcase capacity of oil into the oil-fill tube.

   Note: Max. fill: 0.59 l (20 oz.), type: SAE 30 detergent oil with an API service classification of SF, SG, SH, SJ, SL, or higher.

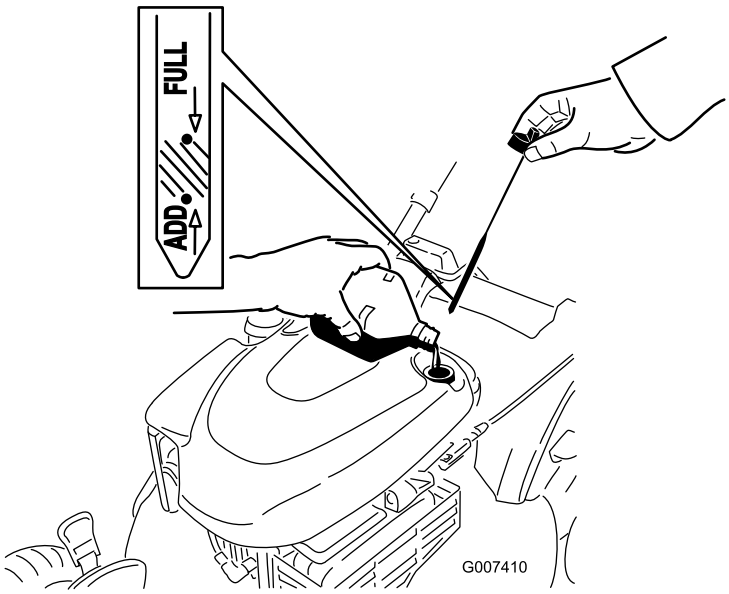

Figure 7

3. Wipe off the dipstick end with a clean cloth.
4. Insert the dipstick into the oil-fill tube, and screw it in until it stops.
5. Remove the dipstick and read the oil level on the dipstick; refer to Figure 7.
   - If the oil level is too low, add a small amount of oil slowly to the oil-fill tube, and then repeat steps 3 through 5 until the oil level is correct as shown in Figure 7.
   - If the oil level is too high, drain the excess oil until you obtain the correct oil level on the dipstick. To drain the excess oil, refer to Changing the Engine Oil (page 17).

   Important: If the oil level in the crankcase is too low or too high and you run the engine, you may damage the engine.
6. Install the dipstick securely by hand.

4

Install the Mulch Plug or the Grass Bag

No Parts Required

Procedure

Important: You must correctly install the mulch plug (for mulching or side-discharging) or the grass bag (for bagging); otherwise, the engine will not start.

The machine has a safety switch, located at the bottom of the channel at the top, right rear of the machine, that prevents the machine from operating without a mulch plug or a grass bag. This prevents the machine from throwing debris at the operator through the rear chute.

For the switch to detect the presence of the mulch plug, **the top of the mulch plug lever must lie fully in the bottom of the channel** (Figure 8).

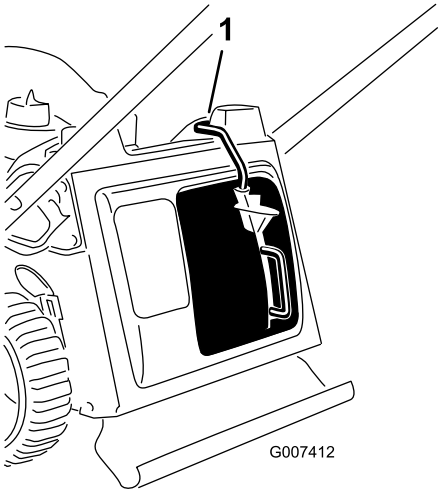

Figure 8

1. Top of mulch plug lever in channel bottom

1. Insert the mulch plug into the machine if it isn't already installed (Figure 9).

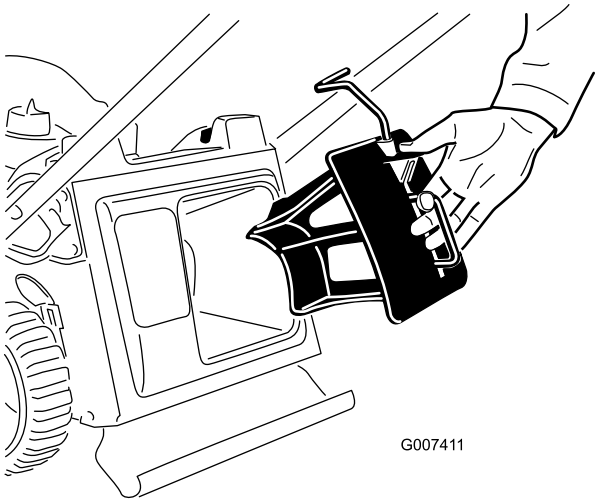

Figure 9

2. Squeeze the button on the lever with your thumb, and fully insert the mulch plug into the opening (Figure 10).

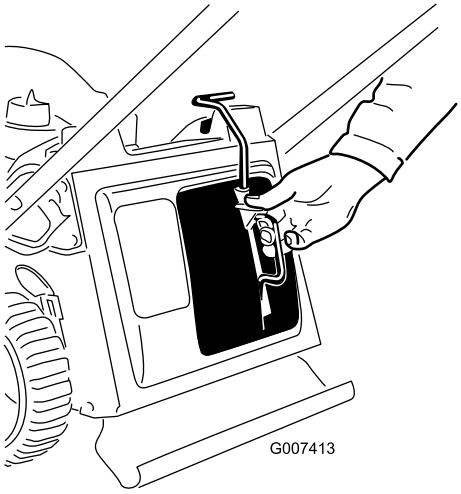

Figure 10

3. Release the button on the lever and ensure that the top of the lever is lies fully in the switch channel (Figure 11). **If the top of the lever is not in the switch channel, your machine will not start.**

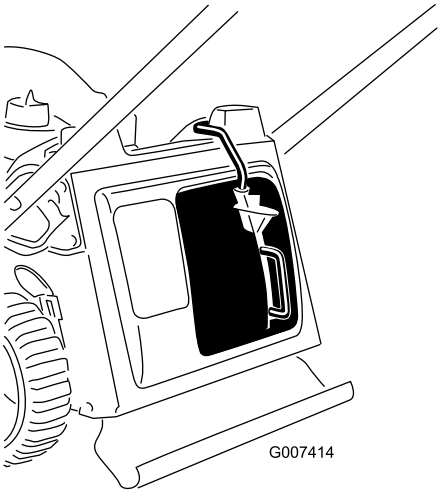

Figure 11

Note: If the lever does not latch properly, disconnect the wire from the spark plug and check for and remove any debris buildup in the tunnel.

Product Overview

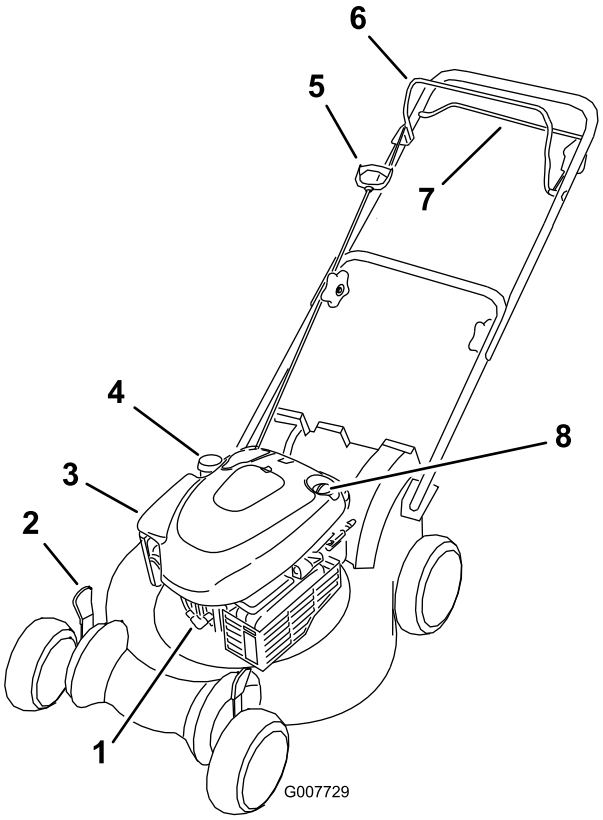

Figure 12
Model 20995

1. Spark plug
2. Cutting-height lever (4)
3. Air filter
4. Fuel-tank cap
5. Recoil-start handle
6. Blade-control bar
7. Self-propel-drive bar
8. Oil fill/Dipstick

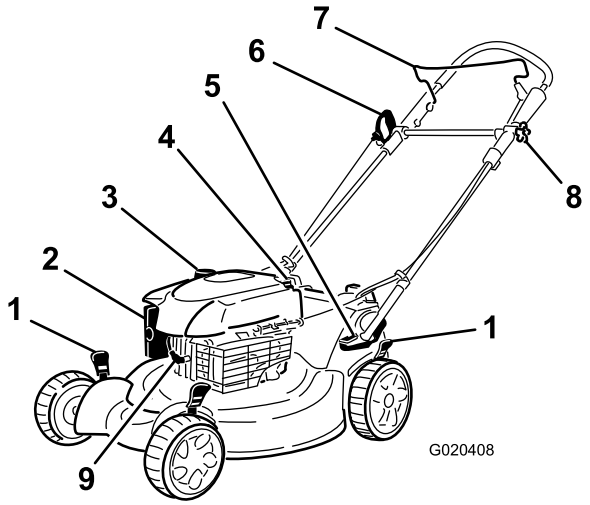

Figure 13
Model 20996

1. Cutting-height lever (4)
2. Air filter
3. Fuel-tank cap
4. Oil fill/Dipstick
5. Foot pedal
6. Recoil-start handle
7. Blade-control bar
8. Upper-handle knob
9. Spark plug

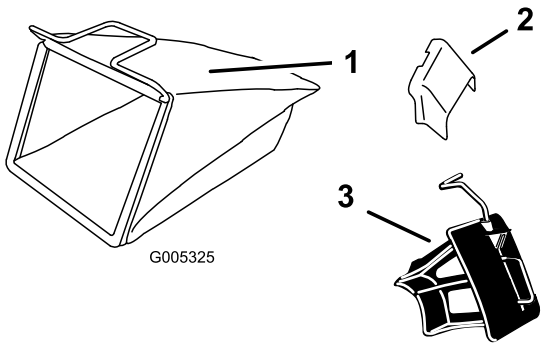

Figure 14

1. Grass bag
2. Side-discharge chute
3. Mulch plug (installed)

Specifications

Model	Weight	Length	Width	Height
20995	35 kg (77 lb)	145 cm (57 in)	56 cm (22 in)	99 cm (39 in)
20996	37 kg (82 lb)	157 cm (62 in)	56 cm (22 in)	112 cm (44 in)

Operation

Filling the Fuel Tank

⚠ DANGER

Gasoline is extremely flammable and explosive. A fire or explosion from gasoline can burn you and others.

- **To prevent a static charge from igniting the gasoline, place the container and/or machine directly on the ground before filling, not in a vehicle or on an object.**
- **Fill the tank outdoors when the engine is cold. Wipe up spills.**
- **Do not handle gasoline when smoking or around an open flame or sparks.**
- **Store gasoline in an approved fuel container, out of the reach of children.**

Note: Fill the fuel tank with fresh unleaded regular gasoline from a major name-brand service station (Figure 15).

Note: Use unleaded regular gasoline suitable for automotive use (87 pump octane minimum). Leaded regular gasoline may be used if unleaded regular is not available.

Important: Never use methanol, gasoline containing methanol, or gasohol containing more than 10% ethanol because they could damage the fuel system. Do not mix oil with gasoline.

Important: To reduce starting problems, add fuel stabilizer to the fuel all season, mixing it with gasoline less than 30 days old.

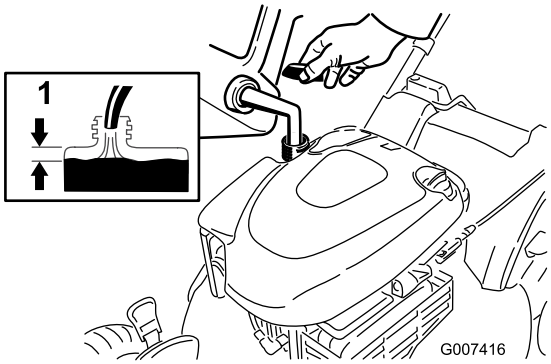

Figure 15

1. 1 cm (1/2 in)

Checking the Engine Oil Level

Service Interval: Before each use or daily

Max. fill: 0.59 l (20 oz.), type: SAE 30 detergent oil with an API service classification of SF, SG, SH, SJ, SL, or higher.

1. Move the machine to a level surface.
2. Remove the dipstick (Figure 16).

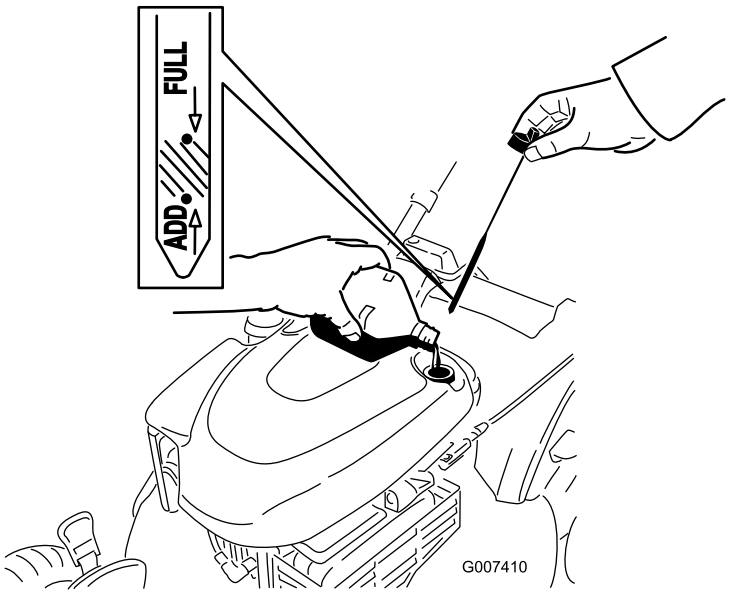

Figure 16

3. Wipe off the dipstick end with a clean cloth.
4. Insert the dipstick into the oil-fill tube and screw it in until it stops.
5. Remove the dipstick and read the oil level; refer to Figure 16.
   - If the oil level is below the **Add** mark on the dipstick, **slowly** add a small amount of oil to the oil-fill tube, and then repeat steps 3 through 5 until the oil level is at the **Full** mark on the dipstick.
   - If the oil level is above the **Full** mark on the dipstick, drain the excess oil until the oil level is at the **Full** mark on the dipstick. To drain the excess oil, refer to Changing the Engine Oil (page 17).

     Important: If the oil level in the crankcase is too low or too high and you run the engine, you may damage the engine.
6. Install the dipstick securely by hand.

Adjusting the Cutting Height

⚠ WARNING

Adjusting the cutting height may bring you into contact with the moving blade, causing serious injury.

- **Stop the engine and wait for all moving parts to stop.**
- **Do not put your fingers under the housing when adjusting the cutting height.**

⚠ CAUTION

If the engine has been running, the muffler will be hot and can severely burn you. Keep away from the hot muffler.

Adjust the cutting height as desired. Set all four wheels to the same height.

Note: To raise the machine, move all 4 cutting height levers forward; to lower the machine, move them all rearward (Figure 17).

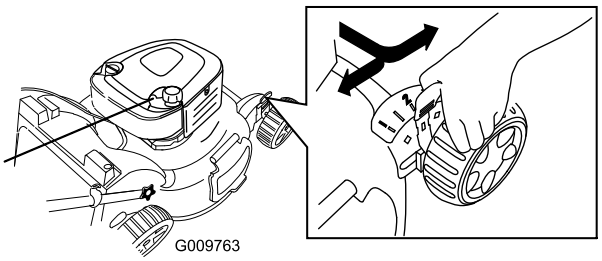

Figure 17

Note: The cutting height settings are 25 mm (1 in); 38 mm (1-1/2 in); 51 mm (2 in); 64 mm (2-1/2 in); 76 mm (3 in); 89 mm (3-1/2 in); 102 mm (4 in); and 114 mm (4-1/2 in).

Adjusting the Upper Handle Height

Model 20996 only

You may raise or lower the upper handle to a position comfortable for you.

Note: You cannot raise the upper handle higher than the angle of the lower handle.

1. Loosen the upper-handle knob (Figure 18).

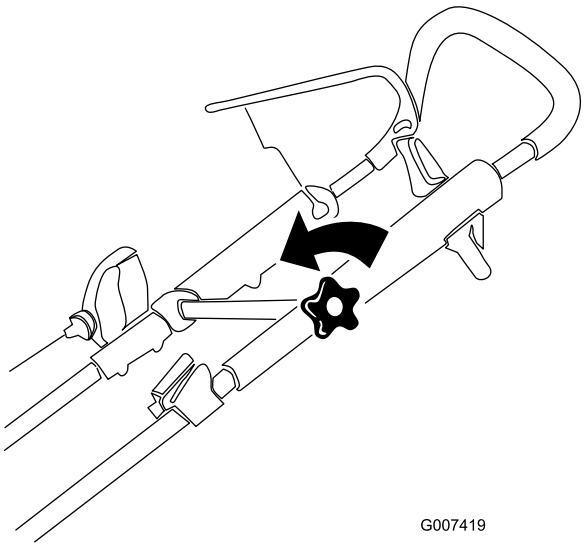

Figure 18

2. Move the upper handle to the desired position (Figure 19).

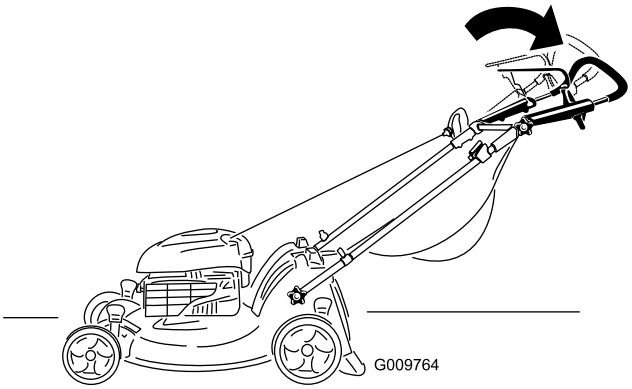

Figure 19

3. Tighten the upper-handle knob firmly (Figure 19).

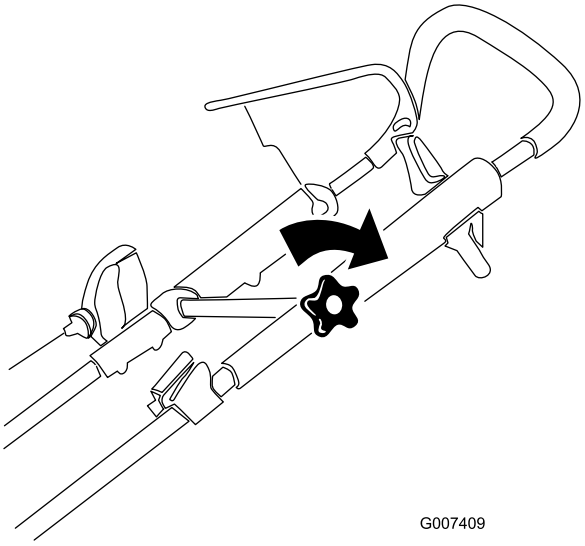

Figure 20

Starting the Engine

Important: The machine has a safety system that prevents you from starting the machine unless you first install the mulch plug or the grass bag securely on the machine.

1. Install the mulch plug (Figure 21) or the grass bag (Figure 22) on the machine.

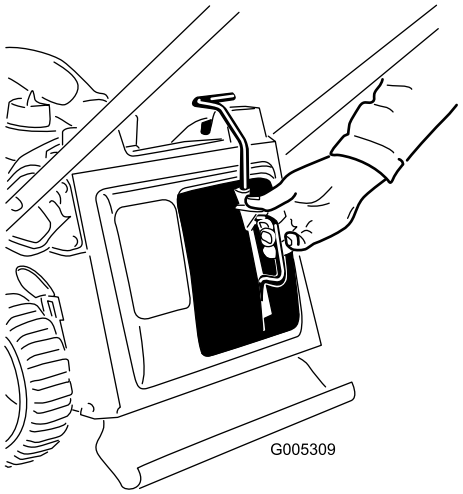

Figure 21

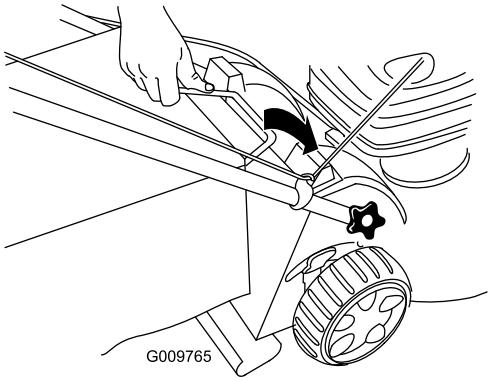

Figure 22

2. Hold the blade-control bar against the handle and pull the recoil starter (Figure 23 or Figure 24).

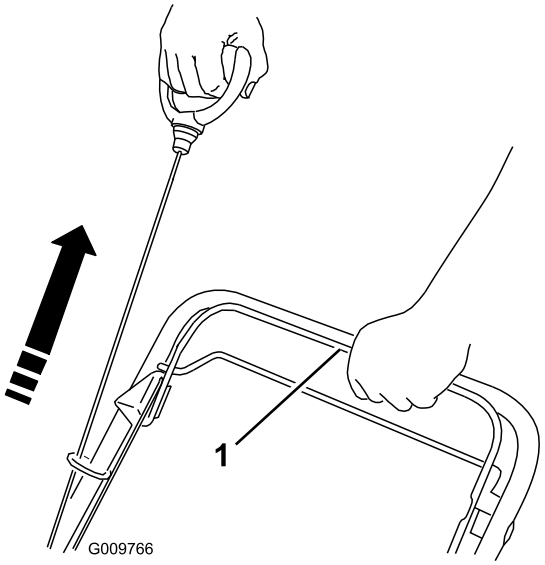

Figure 23

1. Blade-control bar

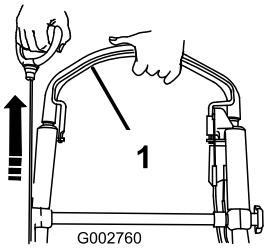

Figure 24

1. Blade-control bar

Note: If the machine still does not start, contact an Authorized Service Dealer.

3. Test the machine safety system; refer to Testing the Machine Safety System in Storage.

Using the Self-propel Drive

Model 20995 only

To operate the self-propel drive, squeeze the self-propel drive bar (Figure 25) toward the handle and hold it.

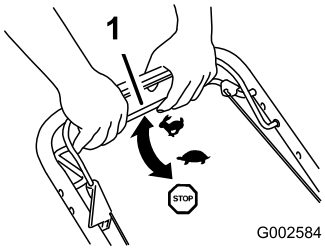

Figure 25

1. Self-propel-drive bar

To disengage the self-propel drive, release the self-propel-drive bar.

Note: The maximum self-propel ground speed is fixed. To reduce the ground speed, increase the space between the self-propel-drive bar and the handle.

Using the Self-propel Drive

Model 20996 only

To operate the self-propel drive, simply walk with your hands on the upper handle and your elbows at your sides, and the machine will automatically keep pace with you (Figure 26 and Figure 27).

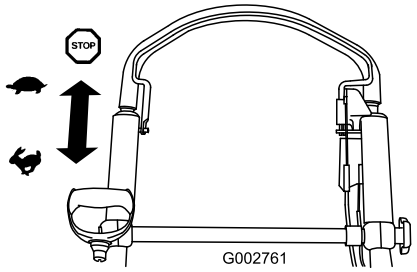

Figure 26

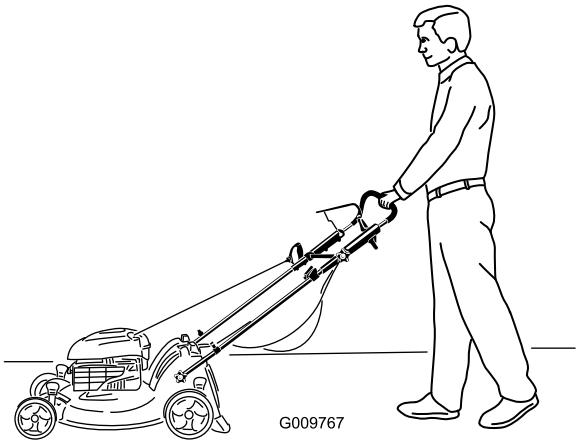

Figure 27

Note: If the machine does not freely roll backward after self-propelling, stop walking, hold your hands in place, and allow the machine to roll a couple of inches (centimeters) forward to disengage the wheel drive. You can also try reaching just under the personal pace handle to the metal handle and push the machine forward a couple of inches (centimeters). If the machine still does not roll backward easily, contact an Authorized Service Dealer.

Stopping the Engine

Service Interval: Before each use or daily—Ensure that the engine stops within 3 seconds after releasing the blade-control bar.

To stop the engine, release the blade-control bar.

Important: When you release the blade-control bar, both the engine and blade should stop within 3 seconds. If they do not stop properly, stop using your machine immediately and contact an Authorized Service Dealer.

Mulching the Clippings

Your machine comes from the factory ready to mulch the grass and leaf clippings back into the lawn.

If the grass bag is on the machine, remove it; refer to Removing the Grass Bag (page 14) before mulching the clippings. If the side-discharge chute is on the machine, remove it and lock the side-discharge door; refer to Removing

the Side-discharge Chute (page 15) before mulching the clippings.

Important: The machine has a safety switch that prevents you from starting the machine unless you first install the mulch plug securely on the machine (Figure 28).

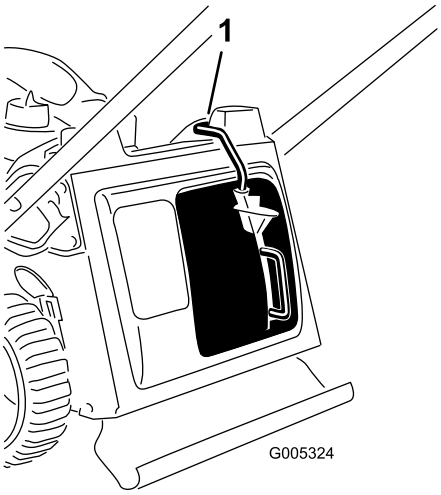

Figure 28

1. Top of mulch plug lever in channel bottom

Bagging the Clippings

Use the grass bag when you want to collect grass and leaf clippings from the lawn.

If the side-discharge chute is on the machine, remove it and lock the side-discharge door; refer to Removing the Side-discharge Chute (page 15) before bagging the clippings.

⚠ WARNING

The blade is sharp; contacting the blade can result in serious personal injury.

Stop the engine and wait for all moving parts to stop before leaving the operating position.

Installing the Grass Bag

1. Remove the mulch plug (Figure 29).

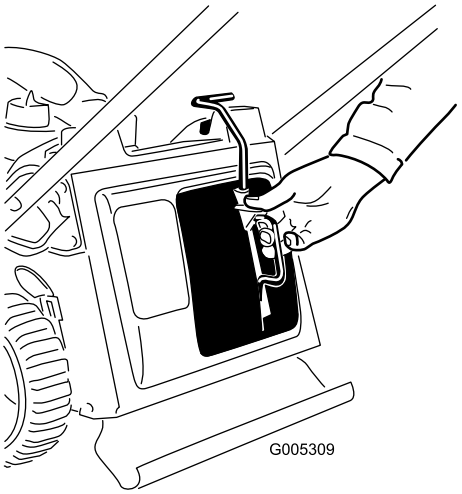

Figure 29

2. Route the starter rope around the lower-rope guide (Figure 30).

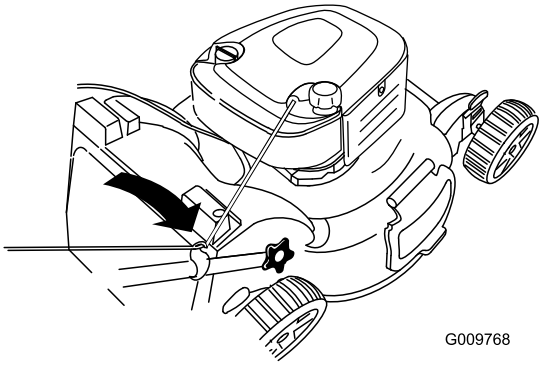

Figure 30

Note: The lower-rope guide releases the starter rope when you pull the recoil-start handle.

3. Insert the grass-bag handle into the grooves at the top of the machine (Figure 31).

Important: The machine has a safety switch that prevents you from starting the machine unless you first install the grass bag securely on the machine.

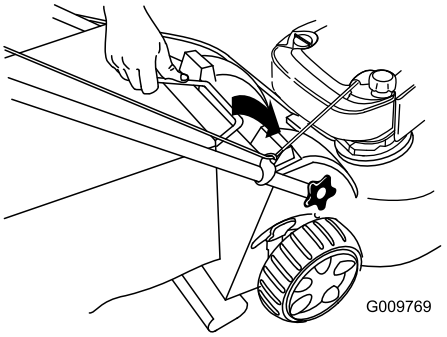

Figure 31

Removing the Grass Bag

1. Route the starter rope around the lower-rope guide (Figure 32).

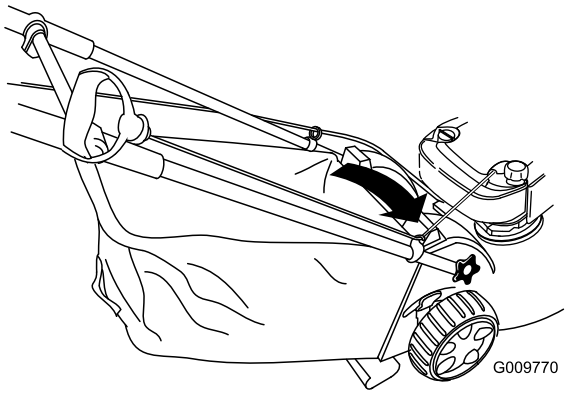

Figure 32

2. Lift the grass-bag handle out from the grooves at the top of the machine and remove the bag from the machine (Figure 33).

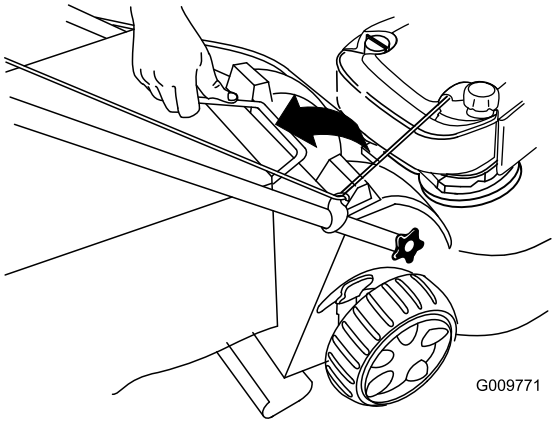

Figure 33

3. Insert the mulch plug (Figure 34).

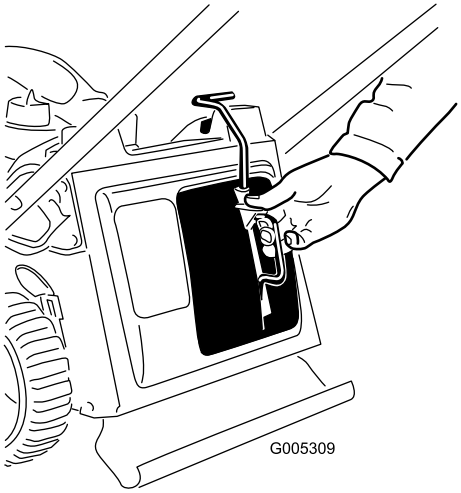

Figure 34

Side-discharging the Clippings

Use the side discharge for cutting very tall grass.

If the bag is on the machine, remove it and insert the mulch plug; refer to Removing the Grass Bag (page 14) before side-discharging the clippings.

Important: The machine has a safety switch that prevents you from starting the machine unless you first install the mulch plug securely on the machine; refer to Mulching the Clippings (page 12).

Installing the Side-discharge Chute

1. Unlock the side-discharge door (Figure 35).

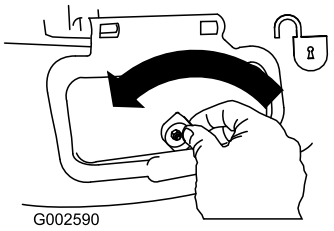

Figure 35

2. Lift open the side-discharge door (Figure 36).

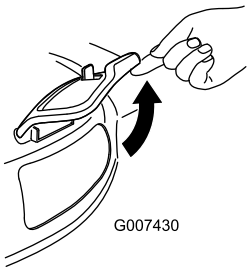

Figure 36

3. Install the side-discharge chute and close the door onto the chute (Figure 37).

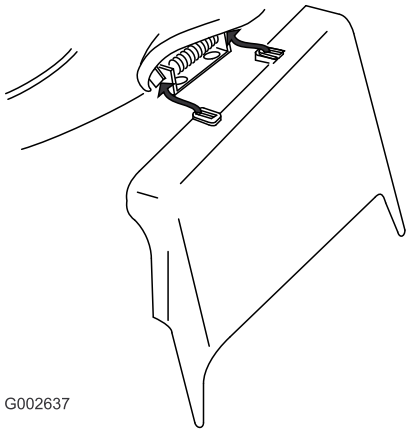

Figure 37

Removing the Side-discharge Chute

To remove the side discharge chute, reverse the steps above.

Important: Lock the side-discharge door after you close it (Figure 38).

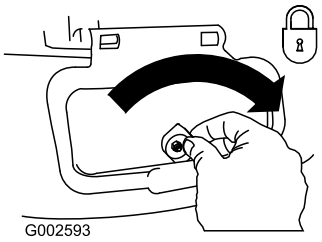

Figure 38

Operating Tips

General Mowing Tips

- Clear the area of sticks, stones, wire, branches, and other debris that the blade could hit.
- Avoid striking solid objects with the blade. Never deliberately mow over any object.
- If the machine strikes an object or starts to vibrate, immediately stop the engine, disconnect the wire from the spark plug, and examine the machine for damage.
- For best performance, install a new blade before the cutting season begins.
- Replace the blade when necessary with a Toro replacement blade.

Cutting Grass

- Cut only about a third of the grass blade at a time. Do not cut below the 51 mm (2 in) setting unless the grass is sparse or it is late fall when grass growth begins to slow down. Refer to Adjusting the Cutting Height (page 10).
- When cutting grass over 15 cm (6 in) tall, mow at the highest cutting-height setting and walk slower; then mow again at a lower setting for the best lawn appearance. If the grass is too long, the machine may plug and cause the engine to stall.
- Mow only dry grass or leaves. Wet grass and leaves tend to clump on the yard and can cause the machine to plug or the engine to stall.

⚠ WARNING

Wet grass or leaves can cause serious injury if you slip and contact the blade. Mow only in dry conditions.

- Alternate the mowing direction. This helps disperse the clippings over the lawn for even fertilization.
- If the finished lawn appearance is unsatisfactory, try one or more of the following:
  - Replace the blade or have it sharpened.
  - Walk at a slower pace while mowing.
  - Raise the cutting height on your machine.
  - Cut the grass more frequently.
  - Overlap cutting swaths instead of cutting a full swath with each pass.
  - Set the cutting height on the front wheels 1 notch lower than the rear wheels. For example, set the front wheels at 51 mm (2 in) and the rear wheels at 64 mm (2-1/2 in).

Cutting Leaves

- After cutting the lawn, ensure that half of the lawn shows through the cut leaf cover. You may need to make more than a single pass over the leaves.
- If there are more than 13 cm (5 in) of leaves on the lawn, set the front cutting height 1 or 2 notches higher than the rear cutting height.
- Slow down your mowing speed if the machine does not cut the leaves finely enough.

Maintenance

Note: Determine the left and right sides of the machine from the normal operating position.

Recommended Maintenance Schedule(s)

Maintenance Service Interval	Maintenance Procedure
After the first 5 hours	• Change the engine oil.
Before each use or daily	• Check the engine oil level. • Ensure that the engine stops within 3 seconds after releasing the blade-control bar. • Clean the underside of the machine housing.
Every 25 hours	• Replace the air filter yearly; replace it more frequently in dusty operating conditions.
Every 50 hours	• Change the engine oil; change it more frequently in dusty operating conditions.
Yearly	• Lubricate the wheel gears. • Lubricate the upper handle.
Yearly or before storage	• Change the engine oil; change it more frequently in dusty operating conditions. • Replace the blade.

Important: Refer to your Engine Operator's Manual for additional maintenance procedures.

Preparing for Maintenance

1. Stop the engine and wait for all moving parts to stop.
2. Disconnect the spark-plug wire from the spark plug (Figure 39) before performing any maintenance procedure.

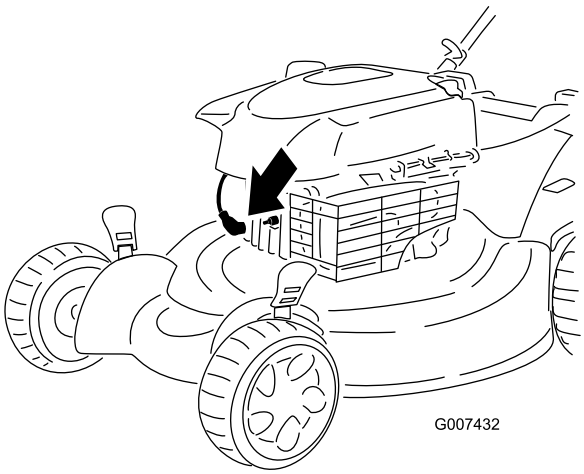

Figure 39

3. After performing the maintenance procedure(s), connect the spark-plug wire to the spark plug.

Important: Before tipping the machine to change the oil or replace the blade, allow the fuel tank to run dry through normal usage. If you must tip the machine prior to running out of fuel, use a hand fuel pump to remove the fuel. Always tip the machine onto its side with the air filter up.

⚠ WARNING

Tipping the machine may cause the fuel to leak. Gasoline is flammable, explosive and can cause personal injury.

Run the engine dry or remove the gasoline with a hand pump; never siphon.

Replacing the Air Filter

Service Interval: Every 25 hours

1. Use a screw driver to open the air-filter cover (Figure 40).

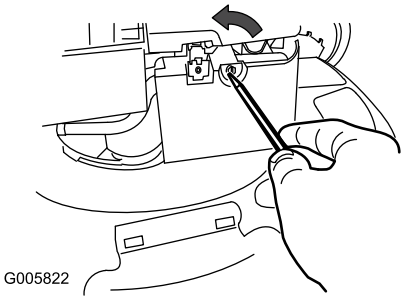

Figure 40

2. Replace the air filter (Figure 41).

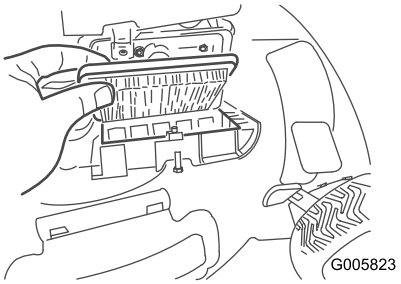

Figure 41

Changing the Engine Oil

Service Interval: After the first 5 hours

Every 50 hours

Yearly or before storage

Note: Max. fill: 0.59 l (20 oz), type: SAE 30 detergent oil with an API service classification of SF, SG, SH, SJ, SL, or higher.

1. Move the machine to a level surface.
2. Ensure that the fuel tank contains little or no fuel so that fuel does not leak out when you tip the machine onto its side.
3. Run the engine a few minutes before changing the oil to warm it.

   Note: Warm oil flows better and carries more contaminants.
4. Disconnect the wire from the spark plug; refer to Preparing for Maintenance (page 16).
5. Set an oil-drain pan beside the machine on the side of the dipstick.
6. Remove the dipstick from the oil-fill tube (Figure 42).

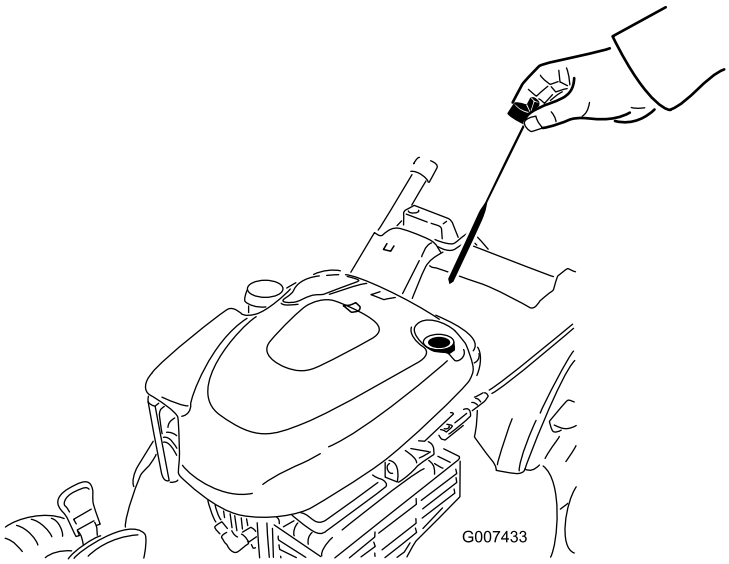

Figure 42

7. Tip the machine onto its side, with the oil-fill tube down, to drain the used oil out through the oil-fill tube into the oil-drain pan (Figure 43).

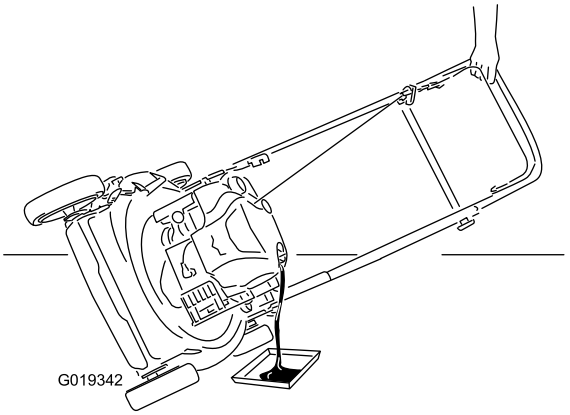

Figure 43

8. After draining the used oil, return the machine to the operating position.
9. Pour about 3/4 of the crankcase capacity of oil into the oil-fill tube.

   Note: Max. fill: 0.59 l (20 oz), type: SAE 30 detergent oil with an API service classification of SF, SG, SH, SJ, SL, or higher.
10. Wipe off the dipstick end with a clean cloth.
11. Insert the dipstick into the oil-fill tube and screw it in until it stops.
12. Remove the dipstick and read the oil level; refer to Figure 44.

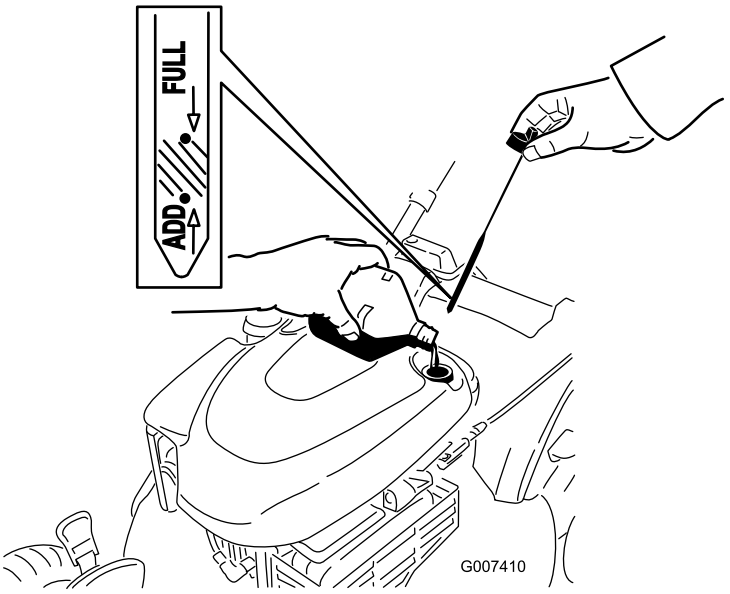

Figure 44

- If the oil level is below the **Add** mark on the dipstick, **slowly** add a small amount of oil to the

oil-fill tube, and then repeat steps 10 through 12 until the oil level is at the **Full** mark on the dipstick.

- If the oil level is above the **Full** mark on the dipstick, drain the excess oil until the oil level is at the **Full** mark on the dipstick.

  Important: If the oil level in the crankcase is too low or too high and you run the engine, you may damage the engine.

13. Install the dipstick securely by hand.
14. Recycle the used oil at a local recycling center.

Lubricating the Wheel Gears

Service Interval: Yearly

1. Remove the wheel bolt in the center of each rear wheel and remove the **rear** wheels.
2. Apply a lubricating oil to the inner and outer sides of the gear as shown in Figure 45.

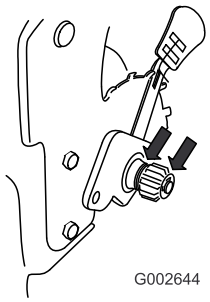

Figure 45

3. Install the rear wheels.

Lubricating the Upper Handle

Service Interval: Yearly

Model 20996 only

Lubricate the left and right sides of the upper handle with a low-viscosity silicone spray lubricant yearly or as needed.

1. Spray the outer plastic end of the inner handle (Figure 46).

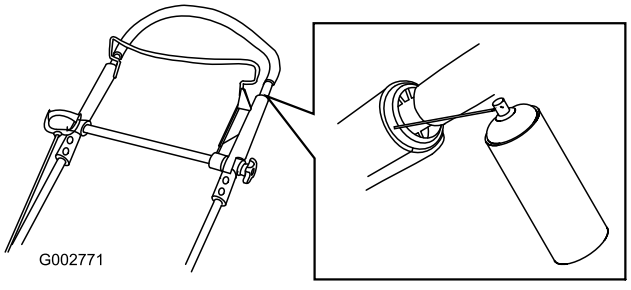

Figure 46

Note: Use the straw that comes with the spray can to direct the spray.

2. Push the upper handle fully down and spray the inner plastic surface of the outer handle (Figure 47).

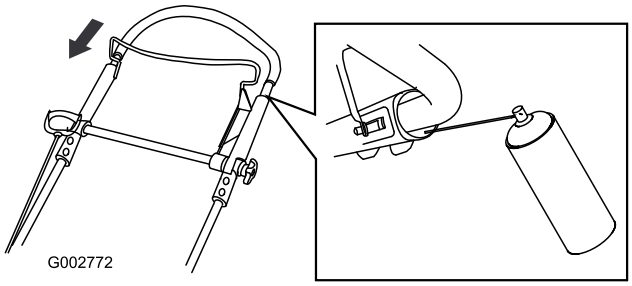

Figure 47

Adjusting the Self-propel Drive Cable

Model 20995 only

Whenever you install a new self-propel cable or if the self-propel drive is out of adjustment, adjust the self-propel drive cable.

1. Loosen the cable support nut (Figure 48).

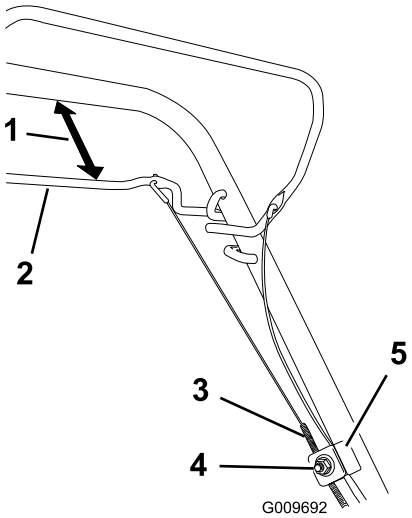

Figure 48

1. 1 to 1-1/2 inches (25 to 38 mm)
2. Self-propel-drive bar
3. Cable jacket
4. Cable-support nut
5. Cable support

2. Hold the self-propel bail 1 to 1-1/2 inches (25 to 38 mm) from the handle (Figure 48).
3. Pull down the cable jacket (toward the machine) until there is no slack in the cable (Figure 48).
4. Tighten the nut on the cable support.
5. Release the self-propel-drive bar and ensure that the cable is loose.

Note: The cable must be loose with the self-propel-drive bar in the released position; otherwise, the machine may creep when the bar is disengaged.

Adjusting the Self-propel Drive Cable

Model 20996 only

1. Loosen the nut on the cable mount (Figure 49).

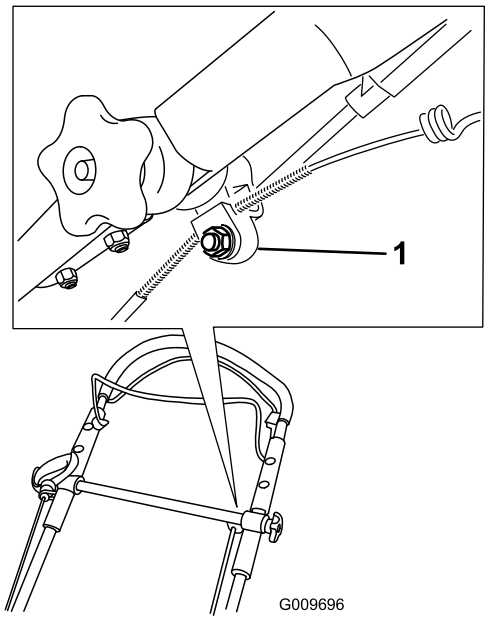

Figure 49

1. Cable mount

2. Pull the upper handle back fully rearward.

   Note: If the handle does not move smoothly, refer to Lubricating the Upper Handle (page 18).

3. Pull the cable jacket downward until you remove the slack in the exposed cable (Figure 50).

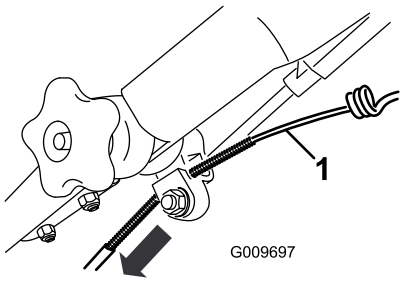

Figure 50

1. Exposed cable

4. Push the cable jacket upward 1/8 inch (3 mm).

   Note: You can place a ruler against the upper side of the black cable mount and measure how far the upper end of the cable jacket moves (Figure 51).

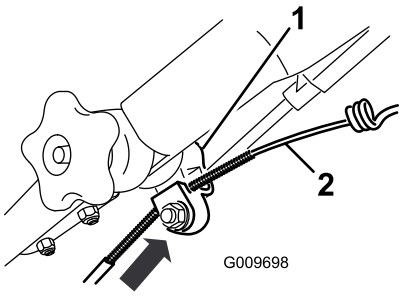

Figure 51

1. Cable mount
2. Cable jacket

   Note: Moving the cable jacket upward decreases the ground speed; moving the jacket downward increases the ground speed.

5. Tighten the nut firmly.
6. Start the machine and check the adjustment.

   Note: If the self-propel drive is not properly adjusted, repeat this procedure.

Replacing the Blade

Service Interval: Yearly or before storage

Important: ***You will need a torque wrench to install the blade properly.*** **If you do not have a torque wrench or are uncomfortable performing this procedure, contact an Authorized Service Dealer.**

Examine the blade whenever you run out of gasoline. If the blade is damaged or cracked, replace it immediately. If the blade edge is dull or nicked, have it sharpened or replace it.

⚠ WARNING

The blade is sharp; contacting the blade can result in serious personal injury.

Wear gloves when servicing the blade.

1. Disconnect the spark-plug wire from the spark plug; refer to Preparing for Maintenance (page 16).
2. Tip the machine onto the side with the dipstick down.
3. Use a block of wood to hold the blade steady (Figure 52).

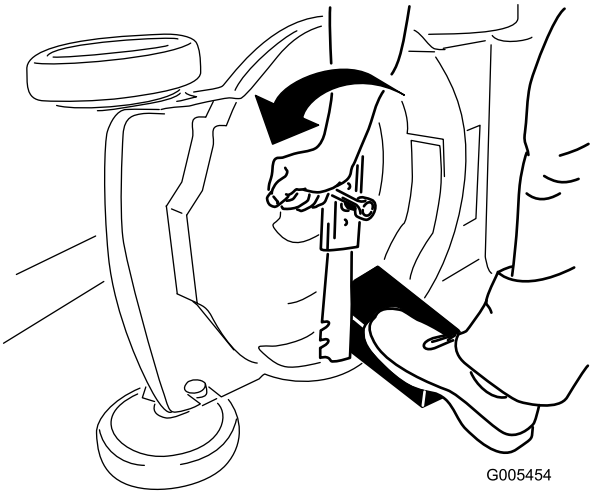

Figure 52

4. Remove the blade, saving all mounting hardware (Figure 52).
5. Install the new blade and all mounting hardware (Figure 53).

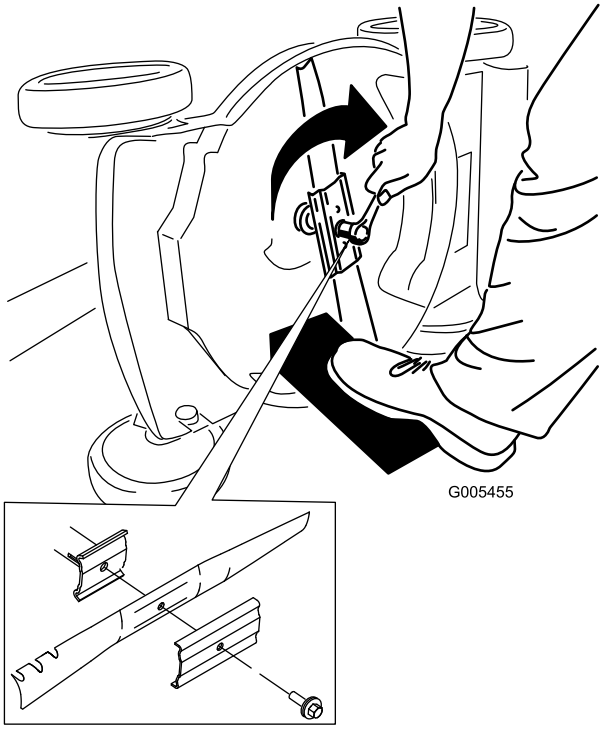

Figure 53

Important: **Position the curved ends of the blade to point toward the machine housing.**

6. Use a torque wrench to tighten the blade bolt to 82 N-m (60 ft-lb).

Important: **A bolt torqued to 82 N-m (60 ft-lb) is very tight. While holding the blade with a block of wood, put your weight behind the ratchet or wrench and tighten the bolt securely. This bolt is very difficult to overtighten.**

Cleaning the Underside of the Machine Housing

Service Interval: Before each use or daily

⚠ WARNING

The machine may dislodge material from under the machine housing.

- **Wear eye protection.**
- **Stay in the operating position (behind the handle).**
- **Do not allow bystanders in the area.**

1. With the engine running on a flat paved surface, spray a stream of water in front of the right rear wheel (Figure 54).

   Note: The water will splash into the path of the blade, cleaning out the clippings.

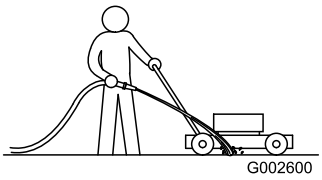

Figure 54

2. When no more clippings come out, stop the water and move the machine to a dry area.
3. Run the engine for a few minutes to dry the housing to prevent it from rusting.

Storage

Preparing the Machine for Storage

⚠ WARNING

Gasoline vapors can explode.

- **Do not store gasoline more than 30 days.**
- **Do not store the machine in an enclosure near an open flame.**
- **Allow the engine to cool before storing it.**

1. On the last refueling of the year, add fuel stabilizer to the fuel as directed by the engine manufacturer.
2. Run the machine until the engine stops from running out of fuel.
3. Prime the engine and start it again.
4. Allow the engine to run until it stops. When you can no longer start the engine, it is sufficiently dry.
5. Disconnect the wire from the spark plug.
6. Remove the spark plug, add 30 ml (1 oz) of oil through the spark plug hole, and pull the starter rope slowly several times to distribute oil throughout the cylinder to prevent cylinder corrosion during the off-season.
7. Loosely install the spark plug.
8. Tighten all nuts, bolts, and screws.

Folding the Handle

Model 20995 only

⚠ WARNING

Folding or unfolding the handle improperly can damage the cables, causing an unsafe operating condition.

- **Do not damage the cables when folding or unfolding the handle.**
- **If a cable is damaged, contact an Authorized Service Dealer.**

1. Loosen the handle knobs until you can move the upper handle freely (Figure 55).

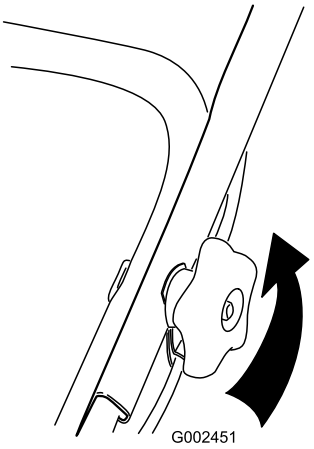

Figure 55

2. Fold the upper handle forward as shown in Figure 56.

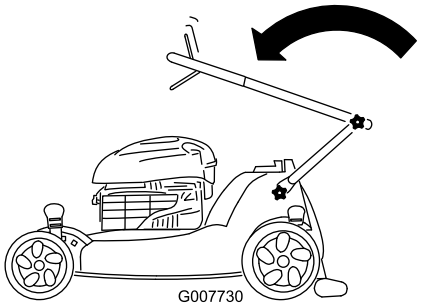

Figure 56

3. To unfold the handle, reverse the steps above.

Folding the Handle

Model 20996 only

Upright Position

1. Step on the foot pedal and hold it down (Figure 57).

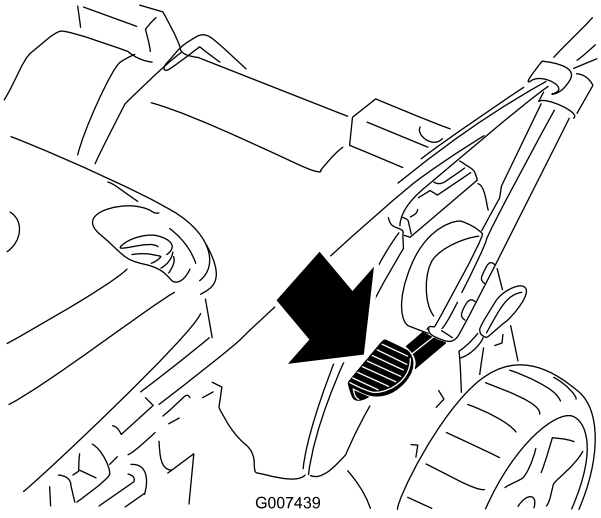

Figure 57

2. Move the handle to the upright position (Figure 58).

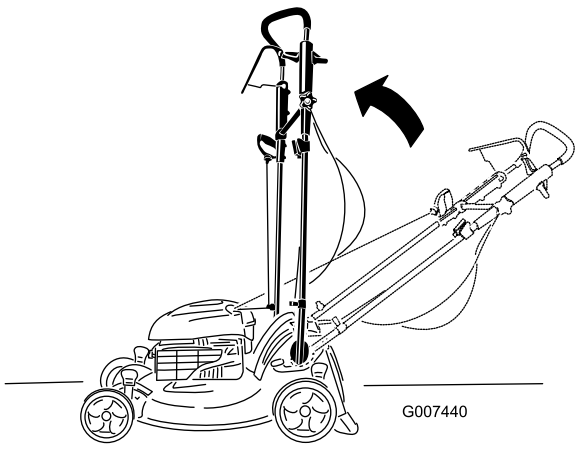

Figure 58

Forward Position

1. With the handle in the upright position, step on the foot pedal and hold it down.
2. Move the handle all the way forward and loosen the upper handle knob (Figure 59).

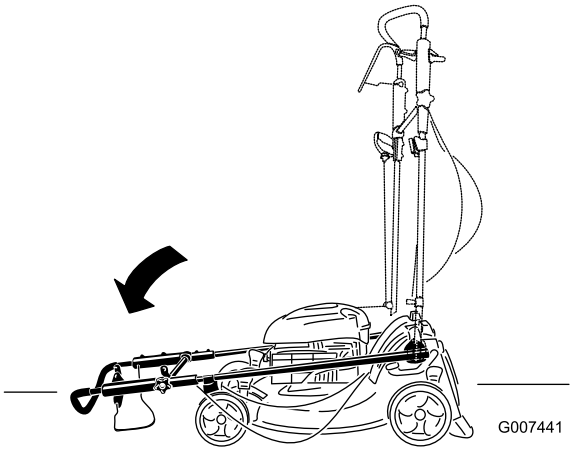

Figure 59

3. To unfold the handle, refer to 1 Unfolding the Handle (page 5).

Removing the Machine from Storage

1. Remove the spark plug and spin the engine rapidly using the starter to blow the excess oil from the cylinder.
2. Install the spark plug and tighten it with a torque wrench to 20 N-m (15 ft-lb).
3. Connect the wire to the spark plug.
4. Test the machine safety system; refer to Testing the Machine Safety System (page 22).

Testing the Machine Safety System

1. Move the machine to a level surface.
2. Stop the engine and wait for all moving parts to stop.
3. If the grass bag is not attached to the machine, remove the discharge plug and install the grass bag.
4. Start the engine.
5. While the engine is running, lift up the upper right rear corner of the grass bag until the wire-bag frame at the upper right front of the grass bag is completely out of the right-hand slot (Figure 60). **The engine should stop.**

Note: The right-hand slot houses a safety interlock switch.

Important: Do not step outside the operating position while performing this step.

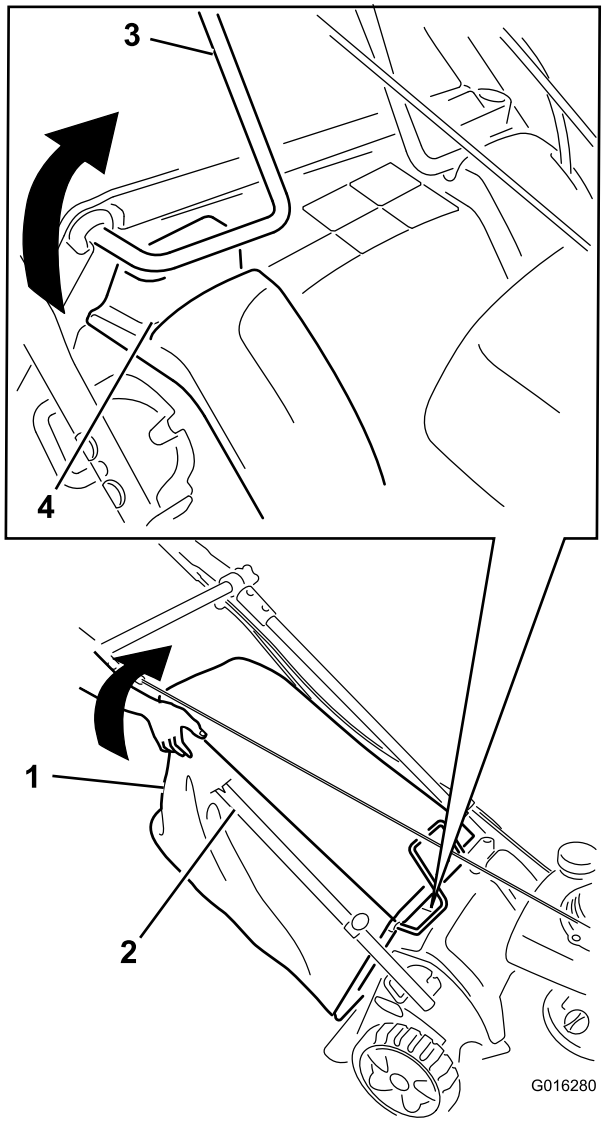

Figure 60

1. Grass bag
2. Right side of handle partially removed for clarity
3. Wire-bag frame
4. Slot

6. If the engine does not stop when you perform this test, release the control bar on the handle to stop the engine, wait for all moving parts to stop, and take your machine to an Authorized Toro Dealer to have the safety system properly repaired.

Notes:

Notes:

Notes:

International Distributor List

Distributor:	Country:	Phone Number:	Distributor:	Country:	Phone Number:
Atlantis Su ve Sulama Sisstemleri Lt	Turkey	90 216 344 86 74	Maquiver S.A.	Colombia	57 1 236 4079
Balama Prima Engineering Equip.	Hong Kong	852 2155 2163	Maruyama Mfg. Co. Inc.	Japan	81 3 3252 2285
B-Ray Corporation	Korea	82 32 551 2076	Agrolanc Kft	Hungary	36 27 539 640
Casco Sales Company	Puerto Rico	787 788 8383	Mountfield a.s.	Czech Republic	420 255 704 220
Ceres S.A.	Costa Rica	506 239 1138	Munditol S.A.	Argentina	54 11 4 821 9999
CSSC Turf Equipment (pvt) Ltd.	Sri Lanka	94 11 2746100	Oslinger Turf Equipment SA	Ecuador	593 4 239 6970
Cyril Johnston & Co.	Northern Ireland	44 2890 813 121	Oy Hako Ground and Garden Ab	Finland	358 987 00733
Equiver	Mexico	52 55 539 95444	Parkland Products Ltd.	New Zealand	64 3 34 93760
Femco S.A.	Guatemala	502 442 3277	Prato Verde S.p.A.	Italy	39 049 9128 128
G.Y.K. Company Ltd.	Japan	81 726 325 861	Prochaska & Cie	Austria	431 278 5100
Geomechaniki of Athens	Greece	30 10 935 0054	RT Cohen 2004 Ltd.	Israel	972 986 17979
Guandong Golden Star	China	86 20 876 51338	Riversa	Spain	34 9 52 83 7500
Hako Ground and Garden	Sweden	46 35 10 0000	Sc Svend Carlsen A/S	Denmark	45 66 109 200
Hako Ground and Garden	Norway	47 22 90 7760	Solvert S.A.S.	France	33 1 30 81 77 00
Hayter Limited (U.K.)	United Kingdom	44 1279 723 444	Spypros Stavrinides Limited	Cyprus	357 22 434131
Hydroturf Int. Co Dubai	United Arab Emirates	97 14 347 9479	Surge Systems India Limited	India	91 1 292299901
Hydroturf Egypt LLC	Egypt	202 519 4308	T-Markt Logistics Ltd.	Hungary	36 26 525 500
Irriamc	Portugal	351 21 238 8260	Toro Australia	Australia	61 3 9580 7355
Irrigation Products Int'l Pvt Ltd.	India	86 22 83960789	Toro Europe NV	Belgium	32 14 562 960
Jean Heybroek b.v.	Netherlands	31 30 639 4611			

European Privacy Notice

The Information Toro Collects
Toro Warranty Company (Toro) respects your privacy. In order to process your warranty claim and contact you in the event of a product recall, we ask you to share certain personal information with us, either directly or through your local Toro company or dealer.

The Toro warranty system is hosted on servers located within the United States where privacy law may not provide the same protection as applies in your country.

BY SHARING YOUR PERSONAL INFORMATION WITH US, YOU ARE CONSENTING TO THE PROCESSING OF YOUR PERSONAL INFORMATION AS DESCRIBED IN THIS PRIVACY NOTICE.

The Way Toro Uses Information
Toro may use your personal information to process warranty claims, to contact you in the event of a product recall and for any other purpose which we tell you about. Toro may share your information with Toro's affiliates, dealers or other business partners in connection with any of these activities. We will not sell your personal information to any other company. We reserve the right to disclose personal information in order to comply with applicable laws and with requests by the appropriate authorities, to operate our systems properly or for our own protection or that of other users.

Retention of your Personal Information
We will keep your personal information as long as we need it for the purposes for which it was originally collected or for other legitimate purposes (such as regulatory compliance), or as required by applicable law.

Toro's Commitment to Security of Your Personal Information
We take reasonable precautions in order to protect the security of your personal information. We also take steps to maintain the accuracy and current status of personal information.

Access and Correction of your Personal Information
If you would like to review or correct your personal information, please contact us by email at legal@toro.com.

Australian Consumer Law

Australian customers will find details relating to the Australian Consumer Law either inside the box or at your local Toro Dealer.

The Toro Warranty and The Toro GTS Starting Guarantee

Conditions and Products Covered

The Toro Company and its affiliate, Toro Warranty Company, pursuant to an agreement between them, jointly promise to repair for the original purchaser[1] the Toro Product listed below if defective in materials or workmanship or if the Toro GTS (Guaranteed to Start) engine will not start on the first or second pull, provided the routine maintenance required in the *Operator's Manual* have been performed.

The following time periods apply from the date of purchase:

Products	Warranty Period
Walk Power Mowers	
• Cast Deck	5 years Residential Use[2] 90 Days Commercial Use
• Engine	5 years GTS Guarantee, Residential Use[3]
• Battery	2 years
• Steel Deck	2 years Residential Use[2] 90 Days Commercial Use
• Engine	2 years GTS Guarantee, Residential Use[3]
TimeMaster Mowers	3 years Residential Use[2] 90 Days Commercial Use
• Engine	3 years GTS Guarantee, Residential Use[3]
• Battery	2 years
Electric Hand Held Products	2 years Residential Use[2] No Warranty for Commercial Use
Snowthrowers	
• Single Stage	2 years Residential Use[2] 45 Days Commercial Use
• Engine	2 years GTS Guarantee, Residential Use[3]
• Two Stage	3 years Residential Use[2] 45 Days Commercial Use
• Chute, chute deflector and impeller housing cover	Lifetime (original owner only)[5]
Electric Snowthrowers	2 years Residential Use[2] No Warranty for Commercial Use
All Ride-On Units Below	
• Engine	See engine manufacturer's warranty[4]
• Battery	2 years Residential Use[2]
• Attachments	2 years Residential Use[2]
DH Lawn & Garden Tractors	2 years Residential Use[2] 90 Days Commercial Use
XLS Lawn & Garden Tractors	3 years Residential Use[2] 90 Days Commercial Use
TimeCutter	3 years Residential Use[2] 90 Days Commercial Use
TITAN Mowers	3 years or 240 hours[5]
• Frame	Lifetime (original owner only)[6]
Z Master Mowers — 2000 Series	4 years or 500 hours[5]
• Frame	Lifetime (original owner only)[6]

[1]Original Purchaser means the person who originally purchased the Toro Product.

[2]Residential use means use of the product on the same lot as your home. Use at more than one location is considered commercial use and the commercial use warranty would apply.

[3]The Toro GTS Starting Guarantee does not apply when the product is used commercially.

[4]Some engines used on Toro Products are warranted by the engine manufacturer.

[5]Whichever occurs first.

[6]Lifetime Frame Warranty - If the main frame, consisting of the parts welded together to form the tractor structure that other components such as the engine are secured to, cracks or breaks in normal use, it will be repaired or replaced, at Toro's option, under warranty at no cost for parts and labor. Frame failure due to misuse or abuse and failure or repair required due to rust or corrosion are not covered.

This warranty covers the cost of parts and labor, but you must pay transportation costs.

Warranty may be denied if the hour meter is disconnected, altered, or shows signs of being tampered with.

Owner Responsibilities

You must maintain your Toro Product by following the maintenance procedures described in the *Operator's Manual*. Such routine maintenance, whether performed by a dealer or by you, is at your expense.

Instructions for Obtaining Warranty Service

If you think that your Toro Product contains a defect in materials or workmanship, follow this procedure:

1. Contact your seller to arrange service of the product. If for any reason it is impossible for you to contact your seller, you may contact any Toro Authorized Distributor to arrange service. See attached Distributor List.
2. Bring the product and your proof of purchase (sales receipt) to the servicing outlet. If for any reason you are dissatisfied with the servicing outlet's analysis or with the assistance provided, contact us at:

   Toro Customer Care Department, RLC Division
   Toro Warranty Company
   8111 Lyndale Avenue South
   Bloomington, MN 55420-1196
   001–952–948–4707

Items and Conditions Not Covered

This express warranty does not cover the following:

- Cost of regular maintenance service or wear parts, such as blades, rotor blades (paddles), scraper blades, belts, fuel, lubricants, oil changes, spark plugs, pneumatic tires, cable/linkage or brake adjustments
- Any product or part which has been altered or misused and requires replacement or repair due to accidents or lack of proper maintenance
- Repairs necessary due to failure to use fresh fuel (less than one month old), or failure to properly prepare the unit prior to any period of non-use over one month
- All repairs covered by these warranties must be performed by an authorized Toro servicing outlet using approved replacement parts.

General Conditions

The purchaser is covered by the national laws of each country. The rights to which the purchaser is entitled with the support of these laws are not restricted by this warranty.