Form No. 3376-753 Rev A

Recycler® 48cm Lawn Mower

Model No. 20952—Serial No. 313000001 and Up

Operator's Manual

Introduction

This rotary-blade, walk-behind lawn mower is intended to be used by residential homeowners. It is designed primarily for cutting grass on well-maintained lawns on residential properties. It is not designed for cutting brush or for agricultural uses.

Read this information carefully to learn how to operate and maintain your product properly and to avoid injury and product damage. You are responsible for operating the product properly and safely.

You may contact Toro directly at www.Toro.com for product and accessory information, help finding a dealer, or to register your product.

Whenever you need service, genuine Toro parts, or additional information, contact an Authorized Service Dealer or Toro Customer Service and have the model and serial numbers of your product ready. Figure 1 identifies the location of the model and serial numbers on the product.

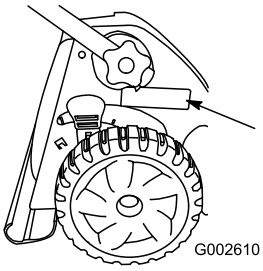

Figure 1

1. Model and serial number plate

Write the product model and serial numbers in the space below:

Model No. _____

Serial No. _____

This manual identifies potential hazards and has safety messages identified by the safety alert symbol (Figure 2), which signals a hazard that may cause serious injury or death if you do not follow the recommended precautions.



Figure 2

1. Safety alert symbol

This manual uses 2 words to highlight information. **Important** calls attention to special mechanical information and **Note** emphasizes general information worthy of special attention.

This product complies with all relevant European directives. For details, see the separate product specific Declaration of Conformity (DOC) sheet.

For models with stated engine horsepower, the gross horsepower of the engine was laboratory rated by the engine manufacturer in accordance with SAE J1940. As configured to meet safety, emission, and operating requirements, the actual engine horsepower on this class of lawn mower will be significantly lower.

Do not tamper with the engine controls or alter the governor speed; doing so may create an unsafe condition resulting in personal injury.

Contents

Introduction 1
- General Lawn Mower Safety 2
- Sound Pressure 3
- Sound Power 3
- Hand-Arm Vibration 3
- Safety and Instructional Decals 4

Setup 5
- 1 Attaching the Handle 5
- 2 Assembling the Grass Bag 5
- 3 Installing the Fuse 6
- 4 Charging the Battery 6
- 5 Filling the Engine with Oil 6

Product Overview 7
- Specifications 7

Operation 8
- Filling the Fuel Tank 8
- Checking the Engine Oil Level 8
- Adjusting the Cutting Height 8
- Adjusting the Upper Handle Height 9
- Starting the Engine 9
- Using the Self-propel Drive 10
- Stopping the Engine 10

© 2012—The Toro® Company
8111 Lyndale Avenue South
Bloomington, MN 55420

Register at www.Toro.com.

CE

Original Instructions (EN)
Printed in the Czech Republic
All Rights Reserved

3376-753 A

Recycling the Clippings 10
Bagging the Clippings 11
Rear-discharging the Clippings 11
Operating Tips 12
Maintenance 13
Recommended Maintenance Schedule(s) 13
Preparing for Maintenance.....13
Replacing the Air Cleaner 13
Changing the Engine Oil 14
Charging the Battery 15
Lubricating the Wheel Gears.....15
Lubricating the Upper Handle.....15
Adjusting the Self-propel Drive 16
Replacing the Blade 16
Cleaning the Machine.....17
Emptying the Fuel Tank 17
Storage 18
Preparing the Machine for Storage 18
Folding the Handle.....18
Removing the Machine from Storage.....18
Troubleshooting 19

Safety

Improperly using or maintaining this lawn mower can result in injury. To reduce the potential for injury, comply with these safety instructions.

Toro designed and tested this lawn mower to offer reasonably safe service; however, failure to comply with the following instructions may result in personal injury.

To ensure maximum safety and best performance, and to gain knowledge of the product, it is essential that you and any other operator of the lawn mower read and understand the contents of this manual before the engine is ever started. Pay particular attention to the safety alert symbol (Figure 2) which means Caution, Warning, or Danger—"personal safety instruction." Read and understand the instruction because it has to do with safety. Failure to comply with the instruction may result in personal injury.

General Lawn Mower Safety

The following instructions have been adapted from EN 836.

This cutting machine is capable of amputating hands and feet and throwing objects. Failure to observe the following safety instructions could result in serious injury or death.

Training

- Read the instructions carefully. Be familiar with the controls and the proper use of the equipment.
- Never allow children or people unfamiliar with these instructions to use the mower. Local regulations can restrict the age of the operator.
- Keep in mind that the operator or user is responsible for accidents or hazards occurring to other people or their property.
- Understand explanations for all pictograms used on the mower or in the instructions.

Gasoline

⚠ WARNING

Gasoline is highly flammable. Take the following precautions.

- **Store fuel in containers specifically designed for this purpose.**
- **Refuel outdoors only and do not smoke while refueling.**
- **Add fuel before starting the engine. Never remove the cap of the fuel tank or add gasoline while the engine is running or when the engine is hot.**
- **If gasoline is spilled, do not attempt to start the engine but move the machine away from the area of spillage and avoid creating any source of ignition until gasoline vapors have dissipated.**
- **Replace all fuel tank and container caps securely.**

Preparation

- While mowing, always wear substantial footwear and long trousers. Do not operate the machine when barefoot or wearing open sandals.
- Thoroughly inspect the area where the machine is to be used, and remove all stones, sticks, wires, bones, and other foreign objects.
- Before using, always visually inspect to see that guards and safety devices, such as deflectors and/or grass catchers, are in place and working correctly.
- Before using, always visually inspect to see that the blades, blade bolts, and cutter assembly are not worn or damaged. Replace worn or damaged blades and bolts in sets to preserve balance.

Starting

Start the engine carefully, according to instructions and with feet well away from the blade(s) and not in front of the discharge chute.

Operation

- Never mow while people, especially children, or pets are nearby.
- Mow only in daylight or in good artificial light.
- Stay alert for holes in the terrain and other hidden hazards.
- Do not put hands or feet near or under rotating parts. Keep clear of the discharge opening at all times.

- Never pick up or carry the machine while the engine is running.
- Use extreme caution when reversing or pulling the mower towards you.
- Walk; never run.
- Slopes:
  - Do not mow on excessively steep slopes.
  - Exercise extreme caution when on slopes.
  - Mow across the face of slopes, never up and down, and exercise extreme caution when changing direction on slopes.
  - Always be sure of your footing on slopes.
- Reduce speed on slopes and in sharp turns to prevent overturning or loss of control.
- Stop the blade if the machine has to be tilted for transportation when crossing surfaces other than grass and when transporting the machine.
- Do not operate the engine in a confined space where dangerous carbon monoxide fumes can collect.
- Stop the engine
  - whenever you leave the machine.
  - before refueling.
  - before removing the grass catcher.
  - before making height adjustment unless adjustment can be made from the operator's position.
- Stop the engine and disconnect the spark plug wire
  - before clearing blockages or unclogging chute.
  - before checking, cleaning, or servicing the machine.
  - after striking a foreign object; inspect the machine for damage and make repairs before restarting and operating the machine.
  - if the machine starts to vibrate abnormally (check immediately).
- Lightning can cause severe injury or death. If you see lightning or hear thunder in the area, do not operate the machine; seek shelter.
- Watch out for traffic when crossing or near roadways.

Maintenance and Storage

- Keep all nuts, bolts, and screws tight to be sure the machine is in safe working condition.
- Do not use pressure cleaning equipment on the machine.
- Never store the machine with gasoline in the tank and inside a building where fumes can reach an open flame or spark.
- Allow the engine to cool before storing in any enclosure.
- To reduce the risk of fire, keep the engine, silencer, battery compartment, and gasoline storage area free of grass, leaves, or excessive grease.
- Check grass catcher components and the discharge guard frequently and replace with manufacturer's recommended parts, when necessary.
- Replace worn or damaged parts for safety.
- Replace faulty silencers.
- If the fuel tank has to be drained, do this outdoors.
- Do not change the engine governor settings or overspeed the engine. Operating an engine at excessive speed can increase the hazard of personal injury.
- On multibladed machines, use caution, as rotating one blade may cause others to rotate.
- Be careful during adjustment of the mower to prevent entrapment of the fingers between moving blades and fixed parts of the mower.
- **To ensure the best performance and safety, purchase only genuine Toro replacement parts and accessories. Do not use *will fit* parts and accessories; they may cause a safety hazard.**

Sound Pressure

This unit has a sound pressure level at the operator's ear of 88 dBA, which includes an Uncertainty Value (K) of 2 dBA. The sound pressure level was determined according to the procedures outlined in EN 836.

Sound Power

This unit has a guaranteed sound power level of 96 dBA, which includes an Uncertainty Value (K) of 1 dBA. The sound power level was determined according to the procedures outlined in ISO 11094.

Hand-Arm Vibration

Measured vibration level for the left hand = 3.2 m/s^2

Measured vibration level for the right hand = 3.5 m/s^2

Uncertainty Value (K) = 1.8 m/s^2

The measured values were determined according to the procedures outlined in EN 836.

Safety and Instructional Decals

Important: **Safety and instruction decals are located near areas of potential danger. Replace damaged decals.**

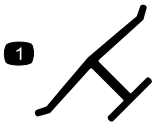

Manufacturer's Mark

1. Indicates the blade is identified as a part from the original machine manufacturer.



110-7178

1. Height of cut

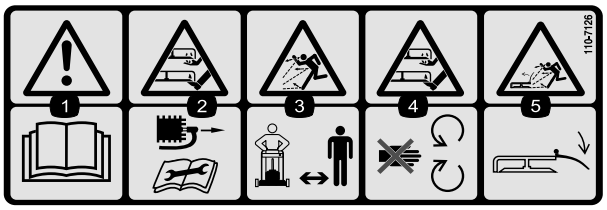

110-7126

1. Warning—read the *Operator's Manual.*
2. Cutting, dismemberment hazard of hand or foot—remove the spark plug wire before performing any maintenance on the machine.
3. Thrown object hazard—keep bystanders a safe distance from the machine.
4. Cutting, dismemberment hazard of hand or foot—stay away from moving parts.
5. Thrown object hazard—keep deflector in place.

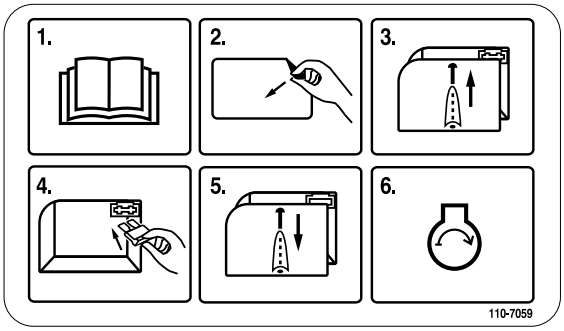

110-7059

1. Read the *Operator's Manual.*
2. Remove the fuse box decal.
3. Remove the fuse box cover.
4. Install the fuse.
5. Replace the fuse box cover.
6. Start the engine.

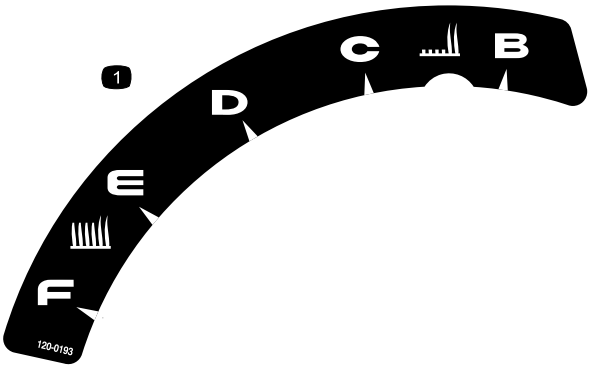

120-0193

1. Height of cut

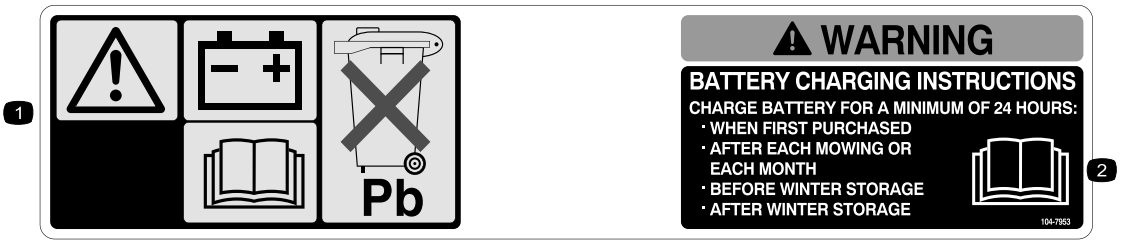

104-7953

1. Warning—read the *Operator's Manual* for information on charging the battery; contains lead; do not discard.
2. Read the *Operator's Manual.*

Setup

Important: Remove and discard the protective plastic sheet that covers the engine.

1

Attaching the Handle

No Parts Required

Procedure

⚠ WARNING

Folding or unfolding the handle improperly can damage the cables, causing an unsafe operating condition.

- **Do not damage the cables when folding or unfolding the handle.**
- **If a cable is damaged, contact an Authorized Service Dealer.**

1. Remove the handle knobs from the machine housing (Figure 3).

   Important: Route the cables to the outside of the handle as you install the handle.

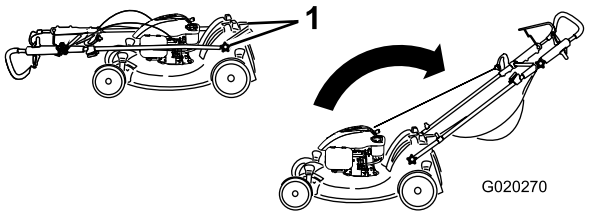

Figure 3

1. Handle knob (2)

2. Move the handle to the operating position.
3. Install and tighten the handle knobs that you removed in step 1 (Figure 3).
4. Move the upper handle to the desired position and tighten the upper handle knob firmly (Figure 4).

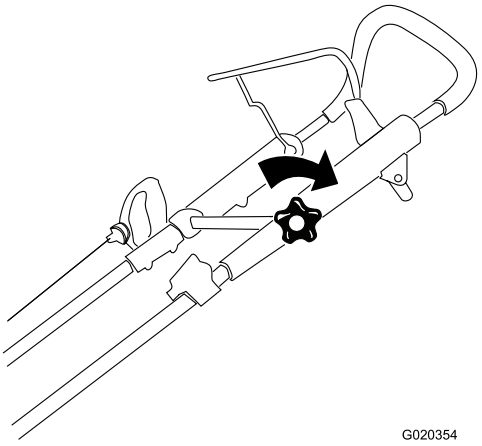

Figure 4

2

Assembling the Grass Bag

No Parts Required

Procedure

1. Slide the bag over the wire frame as shown in Figure 5.

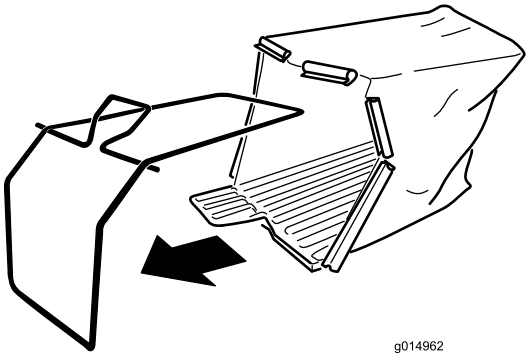

Figure 5

2. Snap the clips onto the wire frame as shown in Figure 6.

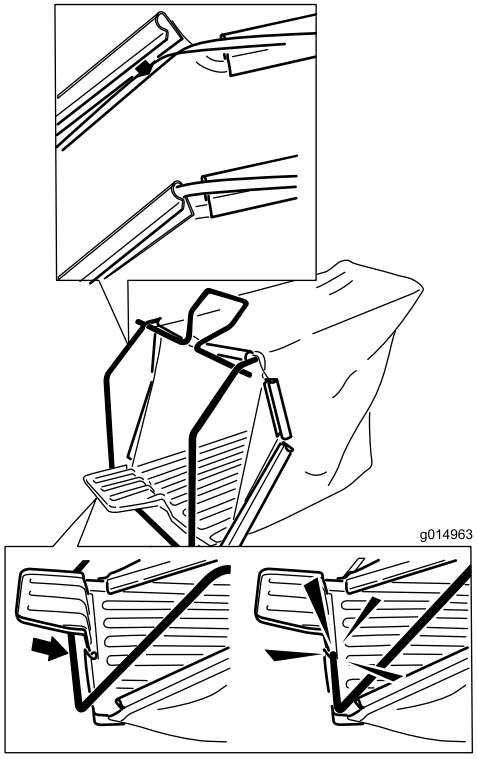

Figure 6

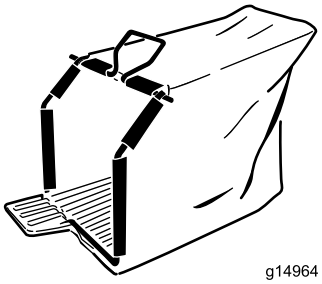

Figure 7

The assembled grass bag

3

Installing the Fuse

No Parts Required

Procedure

Your machine comes with a 40-amp fuse that protects the electric starter.

Important: You cannot start the machine with the electric starter or charge the battery unless you install the fuse.

1. Remove the battery cover and the battery and locate the fuse holder (Figure 8).

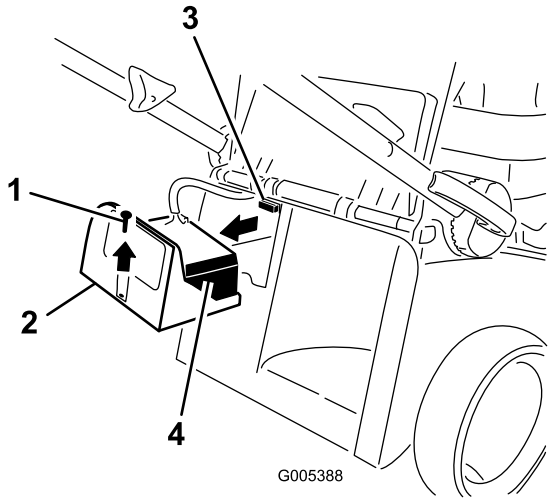

Figure 8

1. Screw
2. Battery cover
3. Fuse holder
4. Battery

2. Insert the fuse (from the loose parts bag) into the fuse holder (Figure 9).

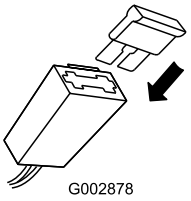

Figure 9

Note: Your machine comes with a fuse in the owner's packet and another fuse in the battery box.

3. Install the battery and the battery cover.

4

Charging the Battery

No Parts Required

Procedure

Refer to Charging the Battery (page 15).

5

Filling the Engine with Oil

Parts needed for this procedure:

0.59 l (20 fl oz)	SAE 30 or SAE 10W-30 detergent oil with an API service classification of SF, SG, SH, SJ, SL, or higher (not provided with the machine)

Procedure

Important: The machine does not come with oil in the engine. Before starting the engine, fill the engine with oil.

1. Move the machine to a level surface.
2. Remove the dipstick (Figure 10).

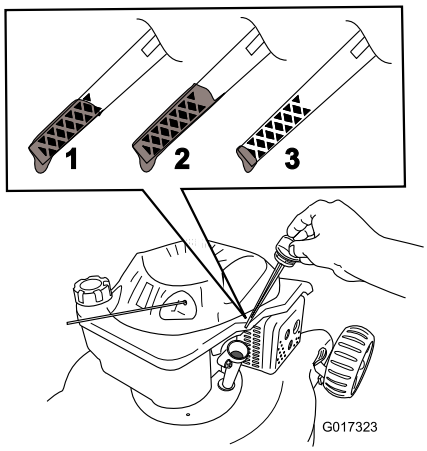

Figure 10

1. Full mark
2. Drain excess oil
3. Add more oil

3. **Slowly** pour oil into the oil fill tube until the oil level reaches the **Full** mark on the dipstick (Figure 10). **Do not overfill.** Max. fill: 0.59 l (20 fl oz), type: SAE 30 or SAE 10W-30 detergent oil with an API service classification of SF, SG, SH, SJ, SL, or higher.
4. Install the dipstick securely.

Important: ***Change the engine oil after the first 5 operating hours*****; change it yearly thereafter. Refer to Changing the Engine Oil (page 14).**

Product Overview

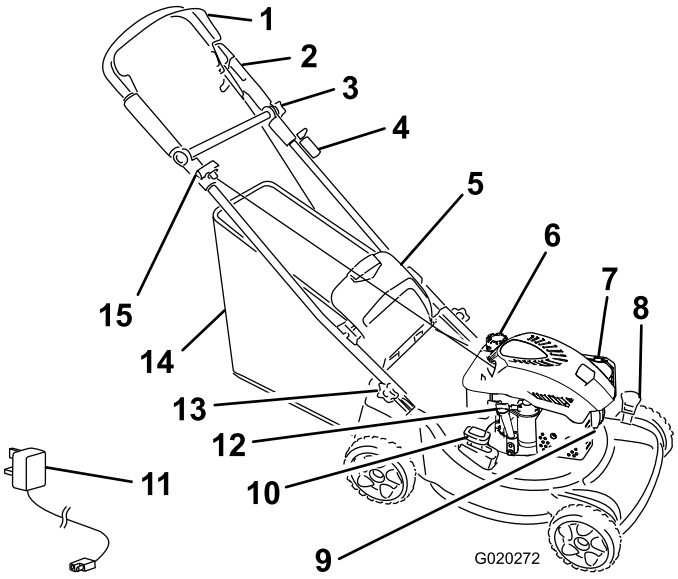

Figure 11

1. Blade control bar
2. Upper handle
3. Upper handle knob
4. Ignition key
5. Rear door
6. Fuel tank cap
7. Air filter
8. Cutting height lever (2)
9. Spark plug
10. Recycling/bagging lever
11. Battery charger
12. Oil fill tube/dipstick
13. Handle knob (2)
14. Grass bag
15. Recoil start handle

Specifications

Model	Weight	Length	Width	Height
20952	38.56 kg (85 lb)	79 cm (31.25 in)	51 cm (20 in)	41 cm (16 in)

Operation

Filling the Fuel Tank

⚠ DANGER

Gasoline is extremely flammable and explosive. A fire or explosion from gasoline can burn you and others.

- **To prevent a static charge from igniting the gasoline, place the container and/or machine directly on the ground before filling, not in a vehicle or on an object.**
- **Fill the tank outdoors when the engine is cold. Wipe up spills.**
- **Do not handle gasoline when smoking or around an open flame or sparks.**
- **Store gasoline in an approved fuel container, out of the reach of children.**

- For best results, use only clean, fresh, unleaded gasoline with an octane rating of 87 or higher ((R+M)/2 rating method).
- Oxygenated fuel with up to 10% ethanol or 15% MTBE by volume is acceptable.
- **Do not** use ethanol blends of gasoline, such as E15 or E85, with more than 10% ethanol by volume. Performance problems and/or engine damage may result, which may not be covered under warranty.
- **Do not** use gasoline containing methanol.
- **Do not** store fuel either in the fuel tank or in fuel containers over the winter unless fuel stabilizer has been added to the fuel.
- **Do not** add oil to gasoline.

Fill the fuel tank with fresh unleaded regular gasoline from a major name-brand service station (Figure 12).

Important: To reduce starting problems, add fuel stabilizer to the fuel all season, mixing it with gasoline less than 30 days old.

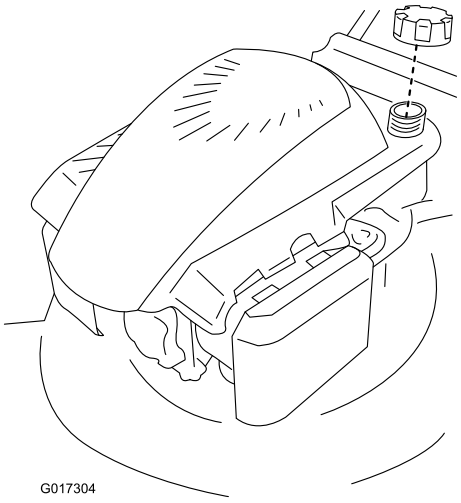

Figure 12

Checking the Engine Oil Level

Service Interval: Before each use or daily—Check the engine oil level.

1. Remove the dipstick, wipe it clean, and fully install the dipstick (Figure 10).
2. Remove the dipstick and check the oil level (Figure 10). If the oil level is below the **Add** mark on the dipstick, **slowly** pour oil into the oil fill tube to raise the oil level to the **Full** mark on the dipstick. **Do not overfill.** (Max. fill: 0.59 l (20 fl oz), type: SAE 30 or SAE 10W-30 detergent oil with an API service classification of SF, SG, SH, SJ, SL, or higher.)
3. Install the dipstick.

Adjusting the Cutting Height

⚠ WARNING

Adjusting the cutting height may bring you into contact with the moving blade, causing serious injury.

- **Stop the engine and wait for all moving parts to stop.**
- **Do not put your fingers under the housing when adjusting the cutting height.**

⚠ CAUTION

If the engine has been running, the muffler will be hot and can severely burn you. Keep away from the hot muffler.

Adjust the cutting height as desired. Set front and rear wheels to the same height.

To raise the machine, move both cutting height levers forward; to lower the machine, move them rearward (Figure 13).

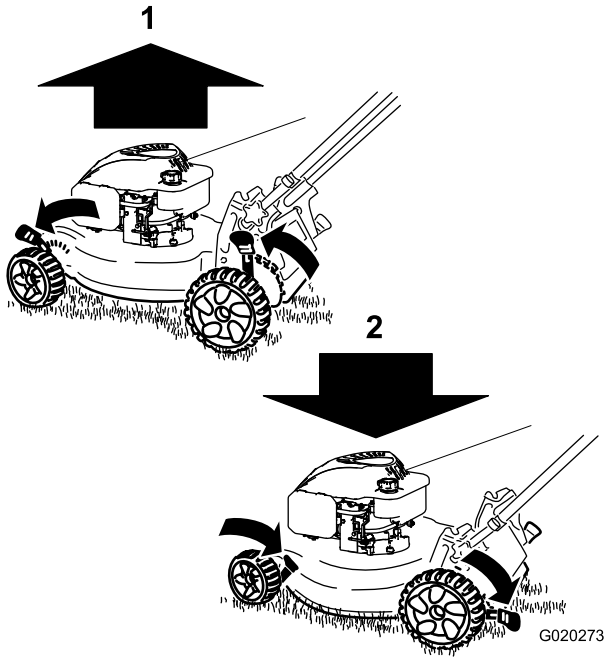

Figure 13

1. Raising the machine
2. Lowering the machine

Note: The cutting height settings are as follows: A = 21 mm; B = 33 mm; C = 50 mm; D = 67 mm; E = 84 mm; and F = 98 mm.

Adjusting the Upper Handle Height

You may raise or lower the upper handle to a position comfortable for you.

Note: You cannot raise the upper handle higher than the angle of the lower handle.

1. Loosen the upper handle knob (Figure 14).

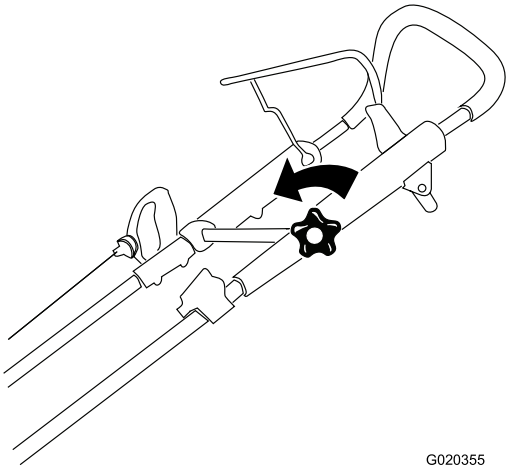

Figure 14

2. Move the upper handle to the desired position (Figure 15).

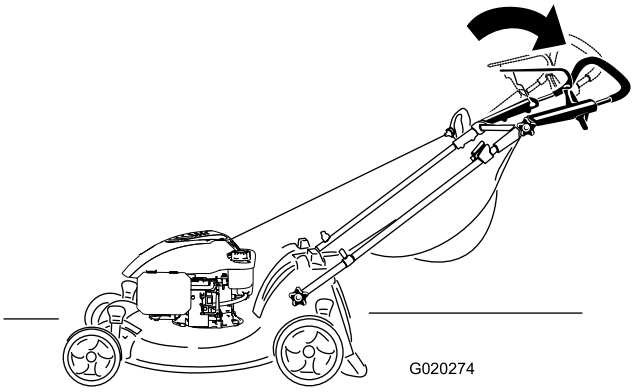

Figure 15

3. Tighten the upper handle knob firmly (Figure 16).

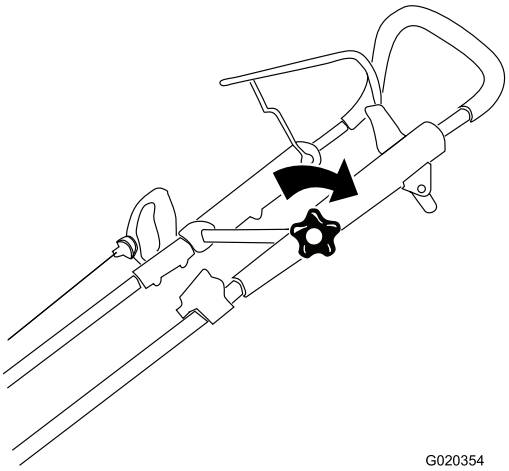

Figure 16

Starting the Engine

1. Hold the blade control bar (Figure 17) against the handle.

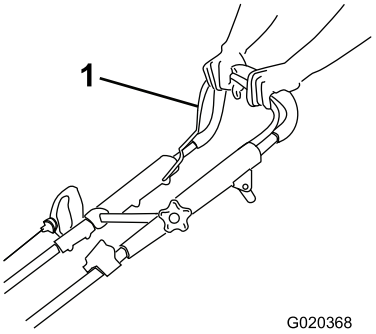

Figure 17

1. Blade control bar

2. Turn the ignition key (Figure 18) or pull the recoil start handle (Figure 19).

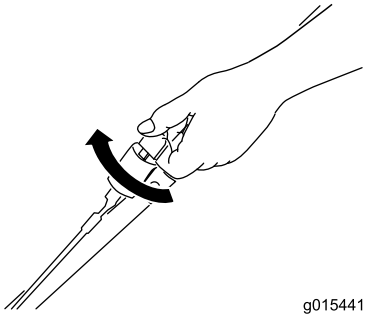

Figure 18

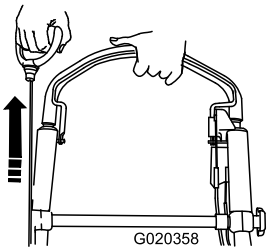

Figure 19

Note: If the machine does not start after several attempts, contact an Authorized Service Dealer.

Using the Self-propel Drive

To operate the self-propel drive, simply walk with your hands on the upper handle and your elbows at your sides, and the machine will automatically keep pace with you (Figure 20 and Figure 21).

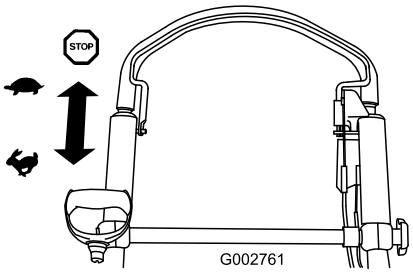

Figure 20



Figure 21

Stopping the Engine

Service Interval: Before each use or daily—Ensure that the engine stops within 3 seconds after releasing the blade control bar.

To stop the engine, release the blade control bar (Figure 22).

Important: When you release the blade control bar, both the engine and blade should stop within 3 seconds. If they do not stop properly, stop using your machine immediately and contact an Authorized Service Dealer.

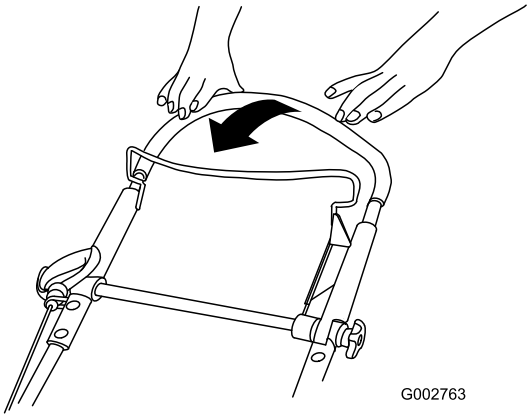

Figure 22

Recycling the Clippings

Your machine comes from the factory ready to recycle the grass and leaf clippings back into the lawn.

Note: The grass bag may remain on the machine while you are recycling the clippings.

To recycle the clippings, move the Recycling/bagging lever to the **recycling** mode (Figure 23).

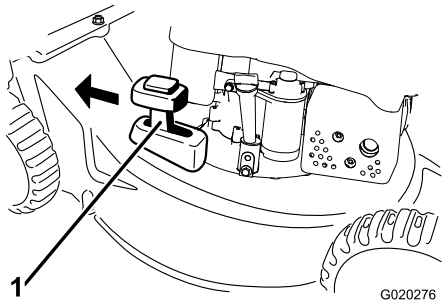

Figure 23

1. Recycling mode

Bagging the Clippings

Use the grass bag when you want to collect grass and leaf clippings from the lawn.

⚠ WARNING

A worn grass bag could allow small stones and other similar debris to be thrown toward the operator or a bystander and result in serious personal injury or death.

Check the grass bag frequently. If it is damaged, install a new Toro replacement bag.

⚠ WARNING

The blade is sharp; contacting the blade can result in serious personal injury.

Stop the engine and wait for all moving parts to stop before leaving the operating position.

To bag the grass clippings, install the grass bag; refer to Installing the Grass Bag (page 11) and move the Recycling/bagging lever to the **bagging** mode (Figure 24).

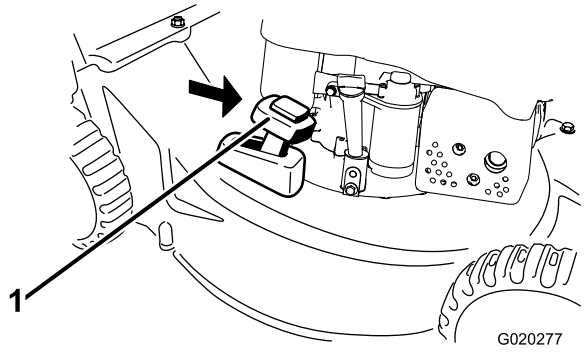

Figure 24

1. Bagging mode

Installing the Grass Bag

Raise and hold up the rear door (Figure 25), install the bag (Figure 26), and lower the rear door .

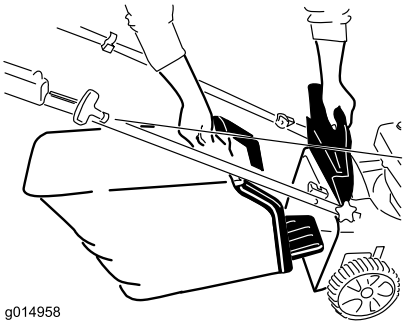

Figure 25

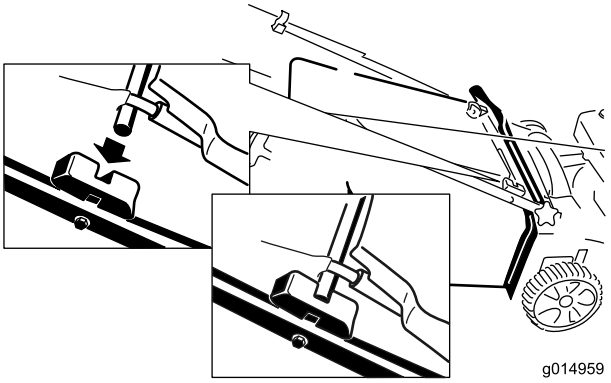

Figure 26

Removing the Grass Bag

To remove the bag, reverse the steps above.

Rear-discharging the Clippings

Use the rear discharge for cutting very tall grass.

If the bag is on the machine, remove it; refer to Removing the Grass Bag (page 11) before rear-discharging the clippings. The Recycling/bagging lever should be in the **bagging** mode (Figure 24).

⚠ WARNING

The blade is sharp; contacting the blade can result in serious personal injury.

Stop the engine and wait for all moving parts to stop before leaving the operating position.

Operating Tips

General Mowing Tips

- Clear the area of sticks, stones, wire, branches, and other debris that the blade could hit.
- Avoid striking solid objects with the blade. Never deliberately mow over any object.
- If the machine strikes an object or starts to vibrate, immediately stop the engine, disconnect the wire from the spark plug, and examine the machine for damage.
- For best performance, install a new blade before the cutting season begins.
- Replace the blade when necessary with a Toro replacement blade.

Cutting Grass

- Cut only about a third of the grass blade at a time. Do not cut below the 50 mm setting unless the grass is sparse or it is late fall when grass growth begins to slow down. Refer to Adjusting the Cutting Height (page 8).
- When cutting grass over 15 cm (6 inches) tall, mow at the highest cutting height setting and walk slower; then mow again at a lower setting for the best lawn appearance. If the grass is too long, the machine may become clogged and cause the engine to stall.
- Mow only dry grass or leaves. Wet grass and leaves tend to clump on the yard and can cause the machine to become clogged or the engine to stall.

⚠ WARNING

Wet grass or leaves can cause serious injury if you slip and contact the blade. Mow only in dry conditions.

- Alternate the mowing direction. This helps disperse the clippings over the lawn for even fertilization.
- If the finished lawn appearance is unsatisfactory, try one or more of the following:
  - Replace the blade or have it sharpened.
  - Walk at a slower pace while mowing.
  - Raise the cutting height on the machine.
  - Cut the grass more frequently.
  - Overlap cutting swaths instead of cutting a full swath with each pass.
  - Set the cutting height on the front wheels one notch lower than the rear wheels. For example, set the front wheels at 50 mm and the rear wheels at 67 mm.

Cutting Leaves

- After cutting the lawn, ensure that half of the lawn shows through the cut leaf cover. You may need to make more than one pass over the leaves.
- If there are more than 13 cm (5 inches) of leaves on the lawn, set the front cutting height one or two notches higher than the rear cutting height.
- Slow down your mowing speed if the machine does not cut the leaves finely enough.

Maintenance

Note: Determine the left and right sides of the machine from the normal operating position.

Recommended Maintenance Schedule(s)

Maintenance Service Interval	Maintenance Procedure
After the first 5 hours	• Change the engine oil.
Before each use or daily	• Check the engine oil level. • Ensure that the engine stops within 3 seconds after releasing the blade control bar. • Clean grass clippings and dirt from under the machine.
Every 25 hours	• Charge the battery for 24 hours.
Before storage	• Empty the fuel tank before repairs as directed and before annual storage.
Yearly	• Replace the air filter; replace it more frequently in dusty operating conditions. • Change the engine oil. • Lubricate the wheel gears. • Lubricate the upper handle. • Replace the blade or have it sharpened (more frequently if the edge dulls quickly). • Refer to your Engine Operator's Manual for any additional yearly maintenance procedures.

Preparing for Maintenance

1. Stop the engine and wait for all moving parts to stop.
2. Disconnect the spark plug wire from the spark plug (Figure 27) before performing any maintenance procedure.

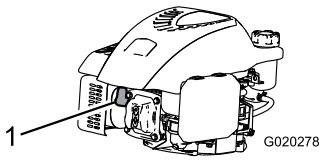

Figure 27

1. Spark plug wire

3. After performing the maintenance procedure(s), connect the spark plug wire to the spark plug.

Important: Before tipping the machine to change the oil or replace the blade, allow the fuel tank to run dry through normal usage. If you must tip the machine prior to running out of fuel, use a hand fuel pump to remove the fuel. Always tip the machine onto its side with the dipstick down.

⚠ WARNING

Tipping the machine may cause the fuel to leak. Gasoline is flammable and explosive, and can cause personal injury.

Run the engine dry or remove the gasoline with a hand pump; never siphon.

Replacing the Air Cleaner

Service Interval: Yearly

1. Press down on the latch tabs on top of the air cleaner cover (Figure 28).

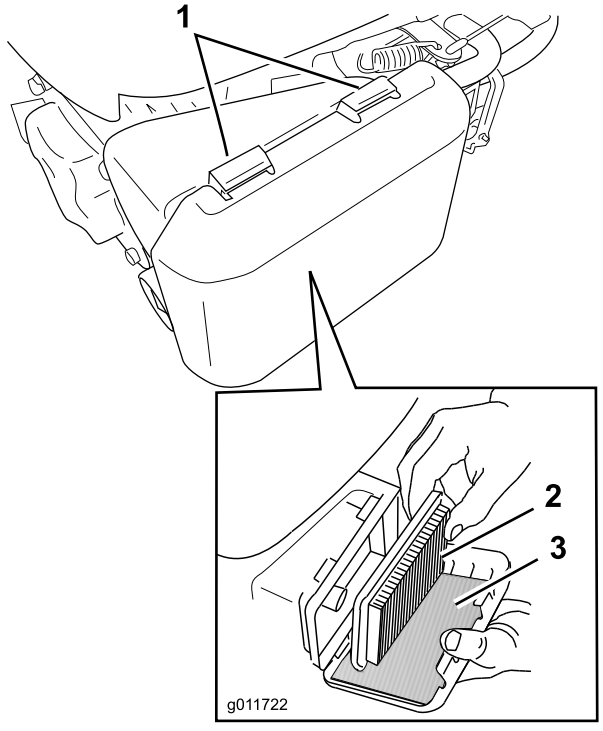

Figure 28

1. Latch tabs
2. Paper air filter
3. Foam pre-filter

2. Open the cover.
3. Remove the paper air filter and the foam pre-filter (Figure 28).
4. Inspect the foam pre-filter, and replace it if it is damaged or excessively dirty.
5. Inspect the paper air filter.
   A. If the paper air filter is damaged or is wet with oil or fuel, replace it.
   B. If the paper air filter is dirty, tap it on a hard surface several times or blow compressed air less than 30 psi (207 kPa) through the side of the filter that faces the engine.

   Note: Do not brush the dirt off the filter; brushing forces dirt into the fibers.
6. Remove dirt from the air cleaner body and cover using a moist rag (to trap the dirt and keep it from falling into the engine). **Do not wipe dirt into the air duct.**
7. Insert the foam pre-filter and the paper air filter into the air cleaner.
8. Install the cover.

Changing the Engine Oil

Service Interval: After the first 5 hours

Yearly

1. Ensure that the fuel tank contains little or no fuel so that fuel does not leak out when you tip the machine onto its side.
2. Run the engine a few minutes before changing the oil to warm it.

   Note: Warm oil flows better and carries more contaminants.
3. Disconnect the wire from the spark plug. Refer to Preparing for Maintenance (page 13).
4. Remove the dipstick.
5. Tip the machine onto its side, with the dipstick down, to drain the used oil out through the oil fill tube (Figure 29).

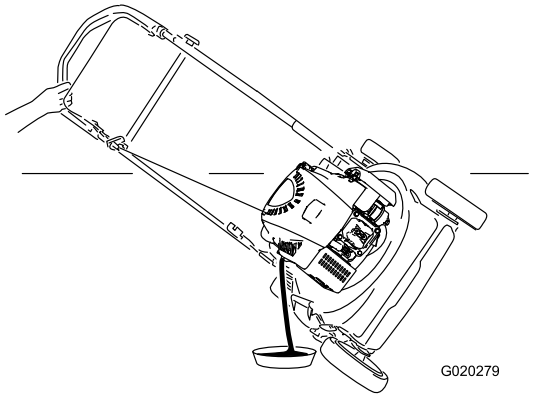

Figure 29

6. Return the machine to the operating position.
7. **Slowly** pour oil into the oil fill hole, wait a few minutes, and check the oil level on the dipstick by wiping the dipstick clean and then inserting, **but not screwing in,** the oil fill cap into the hole.

   Note: Max. fill: 0.59 l (20 oz.), type: SAE 30 or SAE 10W-30 detergent oil with an API service classification of SF, SG, SH, SJ, SL, or higher.

   Note: Fill the engine crankcase with oil until the dipstick indicates that the engine oil level is correct (Figure 30). If you overfill the engine with oil, remove the excess oil as directed in 5.

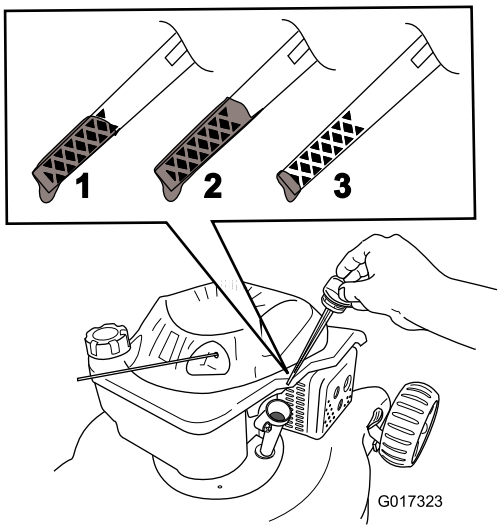

Figure 30

1. The oil level is at its maximum.
2. The oil level is too high—remove oil from the crankcase.
3. The oil level is too low—add oil to the crankcase.

8. Install the dipstick and hand tighten it securely.
9. Dispose of the used oil properly at a local recycling center.

Charging the Battery

Service Interval: Every 25 hours

Always use the charger in a sheltered area and charge the battery at room temperature (22° C) whenever possible.

1. 1. Connect the charger to the machine wire harness located below the ignition key (Figure 31).

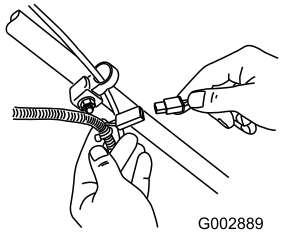

Figure 31

2. Plug the charger into a wall outlet (Figure 32).

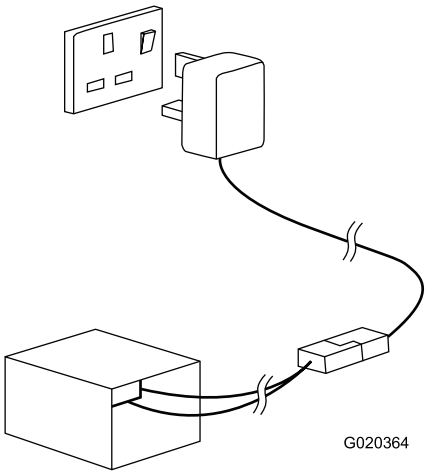

Figure 32

Important: When the battery no longer holds a charge, recycle or dispose of it according to local codes.

Prevent environmental damage. The battery and charger have separate collection marks. These marks indicate that for disposal, the battery and battery charger must be taken to an authorized disposal site. They must not be disposed of with general waste. EU Directive 2002/96/EC classifies this product as electrical or electronic equipment. They should be taken to a designated collection point or recycling center and handled according to national laws in the area. The consumer has a critical role in returning waste electronic/electrical equipment for recycling and disposal. Recycling keeps these products out of the municipal waste stream. The crossed-out bin symbol is a reminder to follow these points. Please contact your local authority or local dealer and ask for further details regarding the correct method of disposal.

Lubricating the Wheel Gears

Service Interval: Yearly—Lubricate the wheel gears.

1. Remove the wheel bolts on the **rear** wheels and remove the rear wheels.
2. Apply a lubricating oil to the gear as shown in Figure 33.

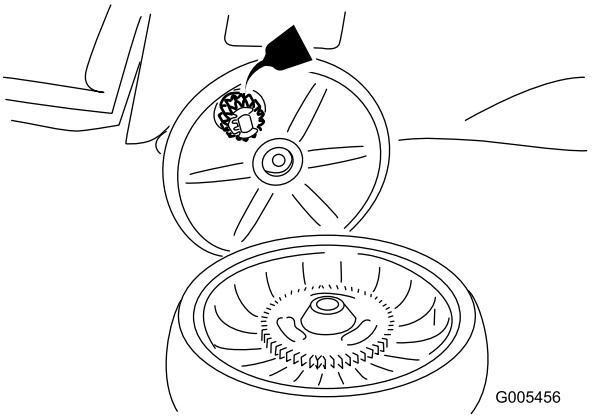

Figure 33

3. Install the rear wheels.

Lubricating the Upper Handle

Service Interval: Yearly

Lubricate the left and right sides of the upper handle with a low-viscosity silicone spray lubricant yearly or as needed.

1. Spray the outer plastic end of the inner handle (Figure 34).

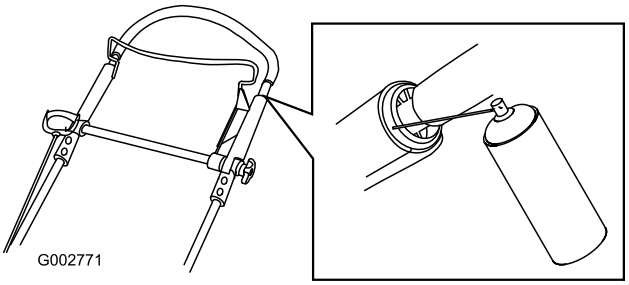

Figure 34

Note: Use the straw that comes with the spray can to direct the spray.

2. Push the upper handle fully down and spray the inner plastic surface of the outer handle (Figure 35).

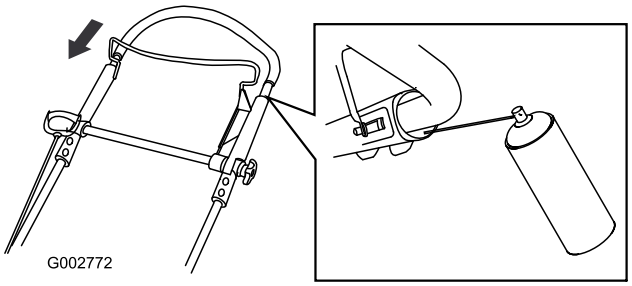

Figure 35

Adjusting the Self-propel Drive

If your machine does not self-propel properly, adjust the self-propel drive cable.

1. Loosen the nut on the cable mount (Figure 36).

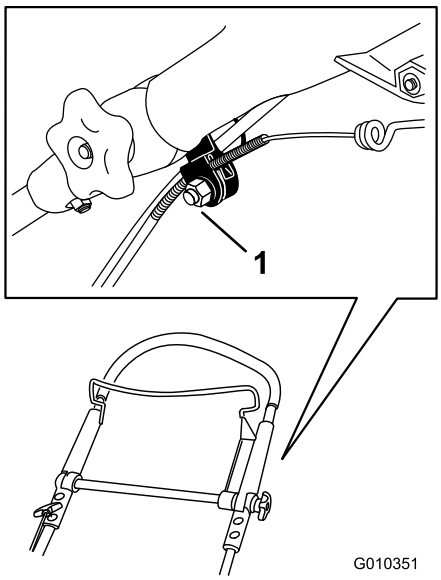

Figure 36

1. Cable mount

2. Pull the upper handle back fully rearward.

   Note: If the handle does not move smoothly, refer to Lubricating the Upper Handle (page 15).

3. Pull the cable jacket downward until you remove the slack in the exposed cable (Figure 37).

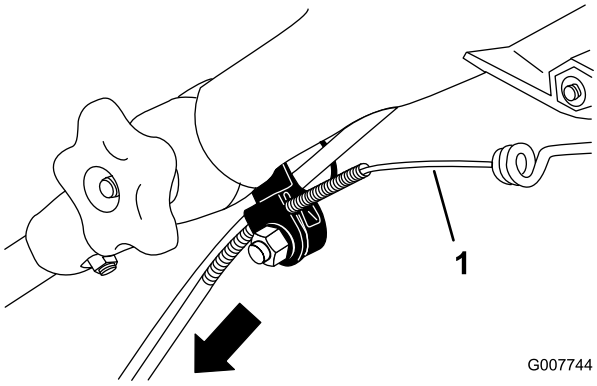

Figure 37

1. Exposed cable

4. Push the cable jacket upward 3 mm (1/8 inch).

   Note: You can place a ruler against the upper side of the black cable mount and measure how far the upper end of the cable jacket moves (Figure 38).

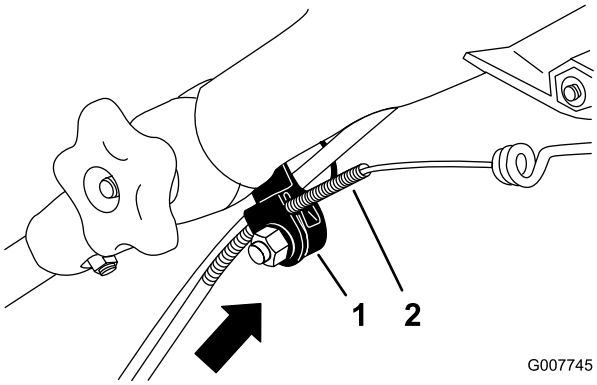

Figure 38

1. Cable mount
2. Cable jacket

   Note: Moving the cable jacket upward decreases the ground speed; moving the jacket downward increases the ground speed.

5. Tighten the nut firmly.
6. Start the machine and check the adjustment.

   Note: If the self-propel drive is not properly adjusted, repeat this procedure.

Replacing the Blade

Service Interval: Yearly

Important: ***You will need a torque wrench to install the blade properly.*** **If you do not have a torque wrench or are uncomfortable performing this procedure, contact an Authorized Service Dealer.**

Examine the blade whenever you run out of gasoline. If the blade is damaged or cracked, replace it immediately. If the blade edge is dull or nicked, have it sharpened or replace it.

⚠ WARNING

The blade is sharp; contacting the blade can result in serious personal injury.

Wear gloves when servicing the blade.

1. Disconnect the spark plug wire from the spark plug. Refer to Preparing for Maintenance (page 13).
2. Tip the machine onto its side, with the dipstick down.
3. Use a block of wood to hold the blade steady (Figure 39).

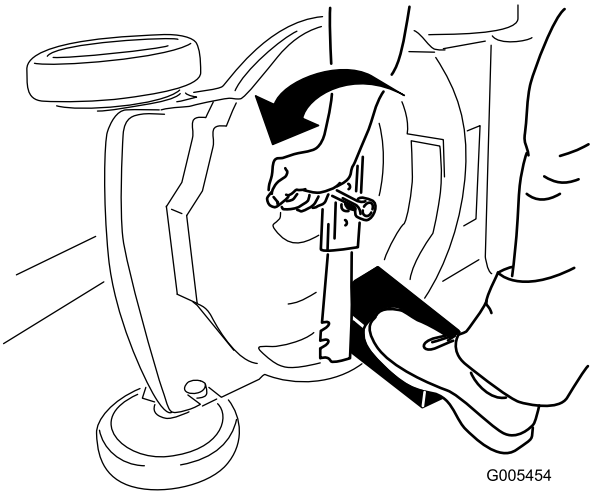

Figure 39

4. Remove the blade, saving all mounting hardware (Figure 39).
5. Install the new blade (turn the blade bolt clockwise) and all mounting hardware (Figure 40).

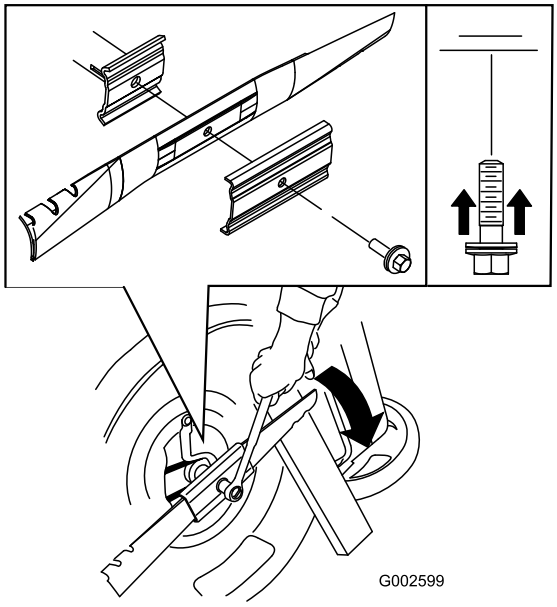

Figure 40

Important: Position the curved ends of the blade to point toward the machine housing.

6. **Use a torque wrench to tighten the blade bolt to 82 N-m (60 ft-lb).**

   Important: A bolt torqued to 82 N-m (60 ft-lb) is very tight. While holding the blade with a block of wood, put your weight behind the ratchet or wrench and tighten the bolt securely. This bolt is very difficult to overtighten.

Cleaning the Machine

Service Interval: Before each use or daily

⚠ WARNING

The machine may dislodge material from under the machine housing.

- **Wear eye protection.**
- **Stay in the operating position (behind the handle).**
- **Do not allow bystanders in the area.**

1. With the engine running on a flat paved surface, spray a stream of water in front of the **right** rear wheel (Figure 41).

   Note: The water will splash into the path of the blade, cleaning out the clippings.

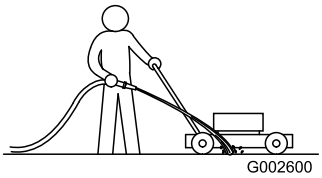

Figure 41

2. When no more clippings come out, stop the water and move the machine to a dry area.
3. Run the engine for a few minutes to dry the housing to prevent it from rusting.

Emptying the Fuel Tank

1. Stop the engine and wait for it to cool down.
2. Disconnect the wire from the spark plug.
3. Remove the cap from the fuel tank.
4. Use a hand pump to syphon the fuel into a clean approved gasoline container.
5. Connect the wire to the spark plug.
6. Run the engine until it stops.
7. Start the engine again to make sure that all the gasoline is out of the carburetor.

Storage

Store the machine in a cool, clean, dry place.

Preparing the Machine for Storage

⚠ WARNING

Gasoline vapors can explode.

- **Do not store gasoline more than 30 days.**
- **Do not store the machine in an enclosure near an open flame.**
- **Allow the engine to cool before storing it.**

1. On the last refueling of the year, add fuel stabilizer to the fuel as directed by the engine manufacturer.
2. Run the machine until the engine stops from running out of fuel.
3. Start it again.
4. Allow the engine to run until it stops. When you can no longer start the engine, it is sufficiently dry.
5. Disconnect the wire from the spark plug.
6. Remove the spark plug, add 30 ml of oil through the spark plug hole, and pull the starter rope slowly several times to distribute oil throughout the cylinder to prevent cylinder corrosion during the off-season.
7. Loosely install the spark plug.
8. Tighten all nuts, bolts, and screws.

Folding the Handle

⚠ WARNING

Folding or unfolding the handle improperly can damage the cables, causing an unsafe operating condition.

- **Do not damage the cables when folding or unfolding the handle.**
- **If a cable is damaged, contact an Authorized Service Dealer.**

1. Loosen both handle knobs that attach the handle to the chassis until you can move the handle freely (Figure 42).

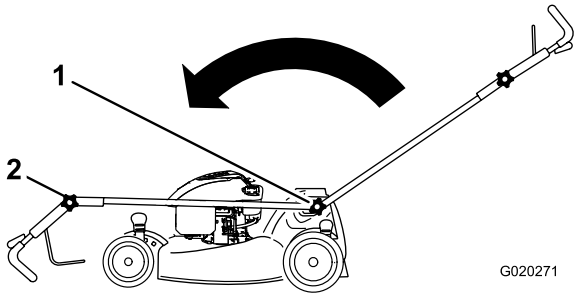

Figure 42

1. Handle knob (2)
2. Upper handle knob

2. Move the handle forward as shown in Figure 42.
3. Loosen the upper handle knob and fold the upper handle as shown in Figure 42.

Removing the Machine from Storage

1. Charge the battery for 24 hours.
2. Check and tighten all fasteners.
3. Remove the spark plug and spin the engine rapidly to blow excess oil from the cylinder.
4. Install the spark plug and tighten it with a torque wrench to 20 N-m (15 ft-lb).
5. Perform any needed maintenance procedures; refer to Maintenance (page 13).
6. Check the engine oil level; refer to Checking the Engine Oil Level (page 8).
7. Fill the fuel tank with fresh gasoline; refer to Filling the Fuel Tank (page 8).
8. Connect the wire to the spark plug.

Troubleshooting

Problem	Possible Cause	Corrective Action
The engine does not start.	1. The wire is not connected to the spark plug.	1. Connect the wire to the spark plug.
	2. The fuel cap vent hole is plugged.	2. Clean the fuel cap vent hole or replace the fuel cap.
	3. The spark plug is pitted, fouled, or incorrectly gapped .	3. Check the spark plug and adjust the gap if necessary. Replace the spark plug if it is pitted, fouled, or cracked.
	4. The fuel tank is empty or the fuel system contains stale fuel.	4. Drain and/or fill the fuel tank with fresh gasoline. If the problem persists, contact an Authorized Service Dealer.
The engine starts hard or loses power.	1. The fuel cap vent hole is plugged.	1. Clean the fuel cap vent hole or replace the fuel cap.
	2. The air filter element is dirty and is restricting the air flow.	2. Clean the air filter pre-cleaner and/or replace the paper air filter.
	3. The underside of the machine contains clippings and debris.	3. Clean under the machine.
	4. The spark plug is pitted, fouled, or incorrectly gapped .	4. Check the spark plug and adjust the gap if necessary. Replace the spark plug if it is pitted, fouled, or cracked.
	5. The engine oil level is too low, too high, or excessively dirty.	5. Check the engine oil. Change the oil if it is dirty; add or drain the oil to adjust the oil level to the Full mark on the dipstick.
	6. The fuel tank contains stale fuel.	6. Drain and fill the fuel tank with fresh gasoline.
The engine runs rough.	1. The wire is not connected to the spark plug.	1. Connect the wire to the spark plug.
	2. The air filter element is dirty and is restricting the air flow.	2. Clean the air filter pre-cleaner and/or replace the paper air filter.
	3. The spark plug is pitted, fouled, or incorrectly gapped .	3. Check the spark plug and adjust the gap if necessary. Replace the spark plug if it is pitted, fouled, or cracked.
The machine or engine vibrates excessively.	1. The underside of the machine housing contains clippings and debris.	1. Clean under the machine housing.
	2. The engine mounting bolts are loose.	2. Tighten the engine mounting bolts.
	3. The blade mounting nuts are loose.	3. Tighten the blade mounting nuts.
	4. The blade is bent or is out of balance.	4. Balance the blade. If the blade is bent, replace it.
There is an uneven cutting pattern.	1. You are mowing in the same pattern repeatedly.	1. Change the mowing pattern.
	2. All 4 wheels are not at the same height.	2. Place all 4 wheels at the same height.
	3. The underside of the machine housing contains clippings and debris.	3. Clean under the machine housing.
	4. The blade is dull.	4. Sharpen and balance the blade.
The machine does not self-propel.	1. There is debris under the belt cover.	1. Clean the debris from under the belt cover.
	2. The self-propel drive cable is out of adjustment or is damaged.	2. Adjust the self-propel drive cable. Replace the cable if necessary.

Notes:

Notes:

Notes:

International Distributor List

Distributor:	Country:	Phone Number:	Distributor:	Country:	Phone Number:
Atlantis Su ve Sulama Sisstemleri Lt	Turkey	90 216 344 86 74	Maquiver S.A.	Colombia	57 1 236 4079
Balama Prima Engineering Equip.	Hong Kong	852 2155 2163	Maruyama Mfg. Co. Inc.	Japan	81 3 3252 2285
B-Ray Corporation	Korea	82 32 551 2076	Agrolanc Kft	Hungary	36 27 539 640
Casco Sales Company	Puerto Rico	787 788 8383	Mountfield a.s.	Czech Republic	420 255 704 220
Ceres S.A.	Costa Rica	506 239 1138	Munditol S.A.	Argentina	54 11 4 821 9999
CSSC Turf Equipment (pvt) Ltd.	Sri Lanka	94 11 2746100	Oslinger Turf Equipment SA	Ecuador	593 4 239 6970
Cyril Johnston & Co.	Northern Ireland	44 2890 813 121	Oy Hako Ground and Garden Ab	Finland	358 987 00733
Equiver	Mexico	52 55 539 95444	Parkland Products Ltd.	New Zealand	64 3 34 93760
Femco S.A.	Guatemala	502 442 3277	Prato Verde S.p.A.	Italy	39 049 9128 128
G.Y.K. Company Ltd.	Japan	81 726 325 861	Prochaska & Cie	Austria	43 1 278 5100
Geomechaniki of Athens	Greece	30 10 935 0054	RT Cohen 2004 Ltd.	Israel	972 986 17979
Guandong Golden Star	China	86 20 876 51338	Riversa	Spain	34 9 52 83 7500
Hako Ground and Garden	Sweden	46 35 10 0000	Sc Svend Carlsen A/S	Denmark	45 66 109 200
Hako Ground and Garden	Norway	47 22 90 7760	Solvert S.A.S.	France	33 1 30 81 77 00
Hayter Limited (U.K.)	United Kingdom	44 1279 723 444	Spypros Stavrinides Limited	Cyprus	357 22 434131
Hydroturf Int. Co Dubai	United Arab Emirates	97 14 347 9479	Surge Systems India Limited	India	91 1 292299901
Hydroturf Egypt LLC	Egypt	202 519 4308	T-Markt Logistics Ltd.	Hungary	36 26 525 500
Irriamc	Portugal	351 21 238 8260	Toro Australia	Australia	61 3 9580 7355
Irrigation Products Int'l Pvt Ltd.	India	86 22 83960789	Toro Europe NV	Belgium	32 14 562 960
Jean Heybroek b.v.	Netherlands	31 30 639 4611			

European Privacy Notice

The Information Toro Collects
Toro Warranty Company (Toro) respects your privacy. In order to process your warranty claim and contact you in the event of a product recall, we ask you to share certain personal information with us, either directly or through your local Toro company or dealer.

The Toro warranty system is hosted on servers located within the United States where privacy law may not provide the same protection as applies in your country.

BY SHARING YOUR PERSONAL INFORMATION WITH US, YOU ARE CONSENTING TO THE PROCESSING OF YOUR PERSONAL INFORMATION AS DESCRIBED IN THIS PRIVACY NOTICE.

The Way Toro Uses Information
Toro may use your personal information to process warranty claims, to contact you in the event of a product recall and for any other purpose which we tell you about. Toro may share your information with Toro's affiliates, dealers or other business partners in connection with any of these activities. We will not sell your personal information to any other company. We reserve the right to disclose personal information in order to comply with applicable laws and with requests by the appropriate authorities, to operate our systems properly or for our own protection or that of other users.

Retention of your Personal Information
We will keep your personal information as long as we need it for the purposes for which it was originally collected or for other legitimate purposes (such as regulatory compliance), or as required by applicable law.

Toro's Commitment to Security of Your Personal Information
We take reasonable precautions in order to protect the security of your personal information. We also take steps to maintain the accuracy and current status of personal information.

Access and Correction of your Personal Information
If you would like to review or correct your personal information, please contact us by email at legal@toro.com.

Australian Consumer Law

Australian customers will find details relating to the Australian Consumer Law either inside the box or at your local Toro Dealer.

The Toro Warranty and The Toro GTS Starting Guarantee

Conditions and Products Covered

The Toro Company and its affiliate, Toro Warranty Company, pursuant to an agreement between them, jointly promise to repair for the original purchaser[1] the Toro Product listed below if defective in materials or workmanship or if the Toro GTS (Guaranteed to Start) engine will not start on the first or second pull, provided the routine maintenance required in the *Operator's Manual* have been performed.

The following time periods apply from the date of purchase:

Products	Warranty Period
Walk Power Mowers	
• Cast Deck	5 years Residential Use[2] 90 Days Commercial Use
• Engine	5 years GTS Guarantee, Residential Use[3]
• Battery	2 years
• Steel Deck	2 years Residential Use[2] 90 Days Commercial Use
• Engine	2 years GTS Guarantee, Residential Use[3]
TimeMaster Mowers	3 years Residential Use[2] 90 Days Commercial Use
• Engine	3 years GTS Guarantee, Residential Use[3]
• Battery	2 years
Electric Hand Held Products	2 years Residential Use[2] No Warranty for Commercial Use
Snowthrowers	
• Single Stage	2 years Residential Use[2] 45 Days Commercial Use
• Engine	2 years GTS Guarantee, Residential Use[3]
• Two Stage	3 years Residential Use[2] 45 Days Commercial Use
• Chute, chute deflector and impeller housing cover	Lifetime (original owner only)[5]
Electric Snowthrowers	2 years Residential Use[2] No Warranty for Commercial Use
All Ride-On Units Below	
• Engine	See engine manufacturer's warranty[4]
• Battery	2 years Residential Use[2]
• Attachments	2 years Residential Use[2]
DH Lawn & Garden Tractors	2 years Residential Use[2] 90 Days Commercial Use
XLS Lawn & Garden Tractors	3 years Residential Use[2] 90 Days Commercial Use
TimeCutter	3 years Residential Use[2] 90 Days Commercial Use
TITAN Mowers	3 years or 240 hours[5]
• Frame	Lifetime (original owner only)[6]
Z Master Mowers — 2000 Series	4 years or 500 hours[5]
• Frame	Lifetime (original owner only)[6]

[1]Original Purchaser means the person who originally purchased the Toro Product.

[2]Residential use means use of the product on the same lot as your home. Use at more than one location is considered commercial use and the commercial use warranty would apply.

[3]The Toro GTS Starting Guarantee does not apply when the product is used commercially.

[4]Some engines used on Toro Products are warranted by the engine manufacturer.

[5]Whichever occurs first.

[6]Lifetime Frame Warranty - If the main frame, consisting of the parts welded together to form the tractor structure that other components such as the engine are secured to, cracks or breaks in normal use, it will be repaired or replaced, at Toro's option, under warranty at no cost for parts and labor. Frame failure due to misuse or abuse and failure or repair required due to rust or corrosion are not covered.

This warranty covers the cost of parts and labor, but you must pay transportation costs.

Warranty may be denied if the hour meter is disconnected, altered, or shows signs of being tampered with.

Owner Responsibilities

You must maintain your Toro Product by following the maintenance procedures described in the *Operator's Manual*. Such routine maintenance, whether performed by a dealer or by you, is at your expense.

Instructions for Obtaining Warranty Service

If you think that your Toro Product contains a defect in materials or workmanship, follow this procedure:

1. Contact your seller to arrange service of the product. If for any reason it is impossible for you to contact your seller, you may contact any Toro Authorized Distributor to arrange service. See attached Distributor List.
2. Bring the product and your proof of purchase (sales receipt) to the servicing outlet. If for any reason you are dissatisfied with the servicing outlet's analysis or with the assistance provided, contact us at:

   Toro Customer Care Department, RLC Division
   Toro Warranty Company
   8111 Lyndale Avenue South
   Bloomington, MN 55420-1196
   001–952–948–4707

Items and Conditions Not Covered

This express warranty does not cover the following:

- Cost of regular maintenance service or wear parts, such as blades, rotor blades (paddles), scraper blades, belts, fuel, lubricants, oil changes, spark plugs, pneumatic tires, cable/linkage or brake adjustments
- Any product or part which has been altered or misused and requires replacement or repair due to accidents or lack of proper maintenance
- Repairs necessary due to failure to use fresh fuel (less than one month old), or failure to properly prepare the unit prior to any period of non-use over one month
- All repairs covered by these warranties must be performed by an authorized Toro servicing outlet using approved replacement parts.

General Conditions

The purchaser is covered by the national laws of each country. The rights to which the purchaser is entitled with the support of these laws are not restricted by this warranty.